The hologram on the front cover of this volume and the EDQM Publication ID (EPID) given below certify that the publication you have purchased is legally licensed from the European Directorate for the Quality of Medicines & HealthCare (EDQM), Strasbourg, France. In order to benefit from our user support, or if you have any concerns about the authenticity of this publication, please visit our website

www.edqm.eu

where you can register your copy and validate the EPID number.

Printed on acid-free paper by Druckerei C. H. Beck, Nördlingen (Germany)

EUROPEAN PHARMACOPOEIA - 8th EDITION

published 15 July 2013

replaces the 7th Edition on 1 January 2014

Volumes 1 and 2 of this publication 8.0 constitute the 8th Edition of the European Pharmacopoeia. They will be complemented by **non-cumulative supplements** that are to be kept for the duration of the 8th Edition. 2 supplements will be published in 2013 and 3 supplements in each of the years 2014 and 2015. A cumulative list of reagents will be published in supplements 8.4 and 8.7.

For legal reasons, the official publication date of a European Pharmacopoeia edition is 6 months ahead of its application date. However, in practice, an edition may be made available before its official publication date. Note that the early availability of an edition does not modify its official publication and application dates.

If you are using the 8th Edition at any time later than 1 April 2014, make sure that you have all the published supplements and consult the index of the most recent supplement to ensure that you use the latest versions of the monographs and general chapters.

The European Pharmacopoeia **Archives** contain the 1st Edition to 7th Edition in PDF format. They are available to all European Pharmacopoeia subscribers with an up-to-date subscription (paper, online or USB stick) and a registered EPID code. To gain access, please register the EPID code found on the inside-front cover.

The registration page is accessible through the EDQM website (visit www.edqm.eu/register).

EUROPEAN PHARMACOPOEIA - ELECTRONIC VERSION

The 8th Edition is also available in an electronic format (online and USB stick) containing all of the monographs and general chapters found in the printed version. With the publication of each supplement the electronic version is replaced by a new, fully updated, cumulative version.

PHARMEUROPA ONLINE

European Pharmacopoeia's free online forum (http://pharmeuropa.edqm.eu)

Pharmeuropa Online contains preliminary drafts of all new and revised monographs proposed for inclusion in the European Pharmacopoeia and gives an opportunity for all interested parties to comment on the specifications before they are finalised. Pharmeuropa Online also contains information on the work programme or of general interest and articles published in Pharmeuropa Bio & Scientific Notes (containing scientific articles on pharmacopoeial matters). **Archives** of Pharmeuropa and Pharmeuropa Bio & Scientific Notes can be accessed via this website.

PHARMACOPOEIAL HARMONISATION

See the information given in general chapter *5.8. Pharmacopoeial harmonisation*.

WEBSITE

www.edqm.eu

https://www.edqm.eu/store (for prices and orders)

HELPDESK

To send a question or to contact the EDQM, use the HelpDesk, accessible through the EDQM website (visit www.edqm.eu/hd).

KNOWLEDGE

Consult Knowledge, the free database, at www.edqm.eu to obtain information on the work programme of the European Pharmacopoeia, the volume of Pharmeuropa and of the European Pharmacopoeia in which a text has been published, trade names of the reagents (for example, chromatography columns) that were used at the time of the elaboration of the monographs, the history of the revisions of a text since its publication in the 5th Edition, representative chromatograms, the list of reference standards used, and the list of certificates granted.

COMBISTATS

CombiStats is a computer program for the statistical analysis of data from biological assays in agreement with chapter *5.3* of the 8th Edition of the European Pharmacopoeia. For more information, visit the website (www.edqm.eu/combistats).

KEY TO MONOGRAPHS

Version date of the text

01/2008:0884
corrected 8.0

Text reference number

CARBIMAZOLE

Carbimazolum

Modification to be taken into account from the publication date of volume 8.0

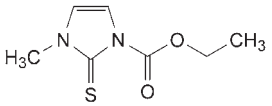

CAS number

$C_7H_{10}N_2O_2S$

[22232-54-8] M_r 186.2

DEFINITION

Chemical name in accordance with IUPAC nomenclature rules

Ethyl 3-methyl-2-thioxo-2,3-dihydro-1*H*-imidazole-1-carboxylate.

Content: 98.0 per cent to 102.0 per cent (dried substance).

CHARACTERS

Appearance: white or yellowish-white, crystalline powder.

Solubility: slightly soluble in water, soluble in acetone and in ethanol (96 per cent).

Application of the first and second identification is defined in the General Notices (chapter 1)

IDENTIFICATION

First identification: B.

Second identification: A, C.

A. Melting point (*2.2.14*): 122 °C to 125 °C.

B. Infrared absorption spectrophotometry (*2.2.24*).

Preparation: discs.

Comparison: *carbimazole CRS.*

Reference standard available from the Secretariat (see www.edqm.eu)

C. Thin-layer chromatography (*2.2.27*).

Test solution. Dissolve 10 mg of the substance to be examined in *methylene chloride R* and dilute to 10 mL with the same solvent.

Reference solution. Dissolve 10 mg of *carbimazole CRS* in *methylene chloride R* and dilute to 10 mL with the same solvent.

Plate: *TLC silica gel GF_{254} plate R.*

Reagent described in chapter 4

Mobile phase: *acetone R*, *methylene chloride R* (20:80 *V/V*).

Application: 10 µL.

Development: over a path of 15 cm.

Further information available on www.edqm.eu (Knowledge)

Drying: in air for 30 min.

Detection: examine in ultraviolet light at 254 nm.

Results: the principal spot in the chromatogram obtained with the test solution is similar in position and size to the principal spot in the chromatogram obtained with the reference solution.

Reference to a general chapter

TESTS

Related substances. Liquid chromatography (*2.2.29*).

Line in the margin indicating where part of the text has been modified (technical modification)

Test solution. Dissolve 5.0 mg of the substance to be examined in 10.0 mL of a mixture of 20 volumes of *acetonitrile R* and 80 volumes of *water R*. Use this solution within 5 min of preparation.

Reference solution (a). Dissolve 5 mg of *thiamazole R* and 0.10 g of *carbimazole CRS* in a mixture of 20 volumes of *acetonitrile R* and 80 volumes of *water R* and dilute to 100.0 mL with the same mixture of solvents. Dilute 1.0 mL of this solution to 10.0 mL with a mixture of 20 volumes of *acetonitrile R* and 80 volumes of *water R*.

Reference solution (b). Dissolve 5.0 mg of *thiamazole R* in a mixture of 20 volumes of *acetonitrile R* and 80 volumes of *water R* and dilute to 10.0 mL with the same mixture of solvents. Dilute 1.0 mL of this solution to 100.0 mL with a mixture of 20 volumes of *acetonitrile R* and 80 volumes of *water R*.

Column:

– *size*: *l* = 0.15 m, Ø = 3.9 mm,

– *stationary phase*: *octadecylsilyl silica gel for chromatography R* (5 µm).

Mobile phase: *acetonitrile R*, *water R* (10:90 *V/V*).

Flow rate: 1 mL/min.

Detection: spectrophotometer at 254 nm.

Injection: 10 µL.

Run time: 1.5 times the retention time of carbimazole.

Retention time: carbimazole = about 6 min.

System suitability: reference solution (a):

– *resolution*: minimum 5.0 between the peaks due to impurity A and carbimazole.

Limits:

– *impurity A*: not more than 0.5 times the area of the principal peak in the chromatogram obtained with reference solution (b) (0.5 per cent),

– *unspecified impurities*: for each impurity, not more than 0.1 times the area of the principal peak in the chromatogram obtained with reference solution (b) (0.10 per cent).

Loss on drying (*2.2.32*): maximum 0.5 per cent, determined on 1.000 g by drying in a desiccator over *diphosphorus pentoxide R* at a pressure not exceeding 0.7 kPa for 24 h.

Sulfated ash (*2.4.14*): maximum 0.1 per cent, determined on 1.0 g.

ASSAY

Dissolve 50.0 mg in *water R* and dilute to 500.0 mL with the same solvent. To 10.0 mL add 10 mL of *dilute hydrochloric acid R* and dilute to 100.0 mL with *water R*. Measure the absorbance (*2.2.25*) at the absorption maximum at 291 nm.

Calculate the content of $C_7H_{10}N_2O_2S$ taking the specific absorbance to be 557.

IMPURITIES

Specified impurities: A.

Other detectable impurities (the following substances would, if present at a sufficient level, be detected by one or other of the tests in the monograph. They are limited by the general acceptance criterion for other/unspecified impurities and/or by the general monograph *Substances for pharmaceutical use (2034)*. It is therefore not necessary to identify these impurities for demonstration of compliance. See also *5.10. Control of impurities in substances for pharmaceutical use): B.*

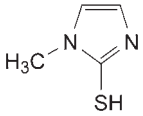

A. 1-methyl-1*H*-imidazole-2-thiol (thiamazole),

SPECIMEN

IMPORTANT NOTICE

GENERAL MONOGRAPHS

The European Pharmacopoeia contains a number of general monographs covering classes of products. These general monographs give requirements that are applicable to all products in the given class or, in some cases, to any product in the given class for which there is a specific monograph in the Pharmacopoeia (see *1. General Notices*, General monographs). Where no restriction on scope of a general monograph is given in a preamble, it is applicable to all products in the class defined, irrespective of whether there is an individual monograph for the product in the Pharmacopoeia.

Whenever a monograph is used, it is essential to ascertain whether there is a general monograph applicable to the product in question. The general monographs listed below are published in the General Monographs section (unless otherwise stated). This list is updated where necessary and republished in each supplement.

Allergen products (1063)

Dosage Forms monographs
(published in the Dosage Forms section or the Homoeopathic Preparations section, as appropriate)

Essential oils (2098)

Extracts (0765)

Herbal drug preparations (1434)

Herbal drugs (1433)

Herbal drugs for homoeopathic preparations (2045)
(published in the Homoeopathic Preparations section)

Herbal teas (1435)

Herbal teas, instant (2620)

Homoeopathic preparations (1038)
(published in the Homoeopathic Preparations section)

Immunosera for human use, animal (0084)

Immunosera for veterinary use (0030)

Methods of preparation of homoeopathic stocks and potentisation (2371)
(published in the Homoeopathic Preparations section)

Monoclonal antibodies for human use (2031)

Mother tinctures for homoeopathic preparations (2029)
(published in the Homoeopathic Preparations section)

Pharmaceutical preparations (2619)

Products of fermentation (1468)

Products with risk of transmitting agents of animal spongiform encephalopathies (1483)

Radiopharmaceutical preparations (0125)

Recombinant DNA technology, products of (0784)

Substances for pharmaceutical use (2034)

Vaccines for human use (0153)

Vaccines for veterinary use (0062)

Vegetable fatty oils (1579)

Members of the European Pharmacopoeia Commission: Austria, Belgium, Bosnia and Herzegovina, Bulgaria, Croatia, Cyprus, Czech Republic, Denmark, Estonia, Finland, France, Germany, Greece, Hungary, Iceland, Ireland, Italy, Latvia, Lithuania, Luxembourg, Malta, Montenegro, Netherlands, Norway, Poland, Portugal, Romania, Serbia, Slovakia, Slovenia, Spain, Sweden, Switzerland, 'the former Yugoslav Republic of Macedonia', Turkey, Ukraine, United Kingdom and the European Union.

Observers to the European Pharmacopoeia Commission: Albania, Algeria, Argentina, Armenia, Australia, Brazil, Canada, China, Georgia, Israel, Madagascar, Malaysia, Moldova, Morocco, Republic of Belarus, Republic of Guinea, Republic of Kazakhstan, Republic of Singapore, Russian Federation, Senegal, Syria, Tunisia, United States of America and WHO (World Health Organization).

How to contact us

Information and orders **Internet: www.edqm.eu**

European Directorate for the Quality of Medicines & HealthCare (EDQM)
Council of Europe - 7 allée Kastner
CS 30026, F-67081 STRASBOURG, FRANCE
Tel: +33 (0)3 88 41 30 30
Fax: +33 (0)3 88 41 27 71

Correspondence ..... Via the online HelpDesk (www.edqm.eu/hd)

How to place an order

Publications. ..... https://www.edqm.eu/store

Reference standards ..... www.edqm.eu/site/EDQM_Reference_standards-649.html

Reference standards online order form www.edqm/eu/site/CRS-order-form-697.html

Further information, including answers to the most frequently asked questions regarding ordering, is available via the HelpDesk.

Submission of scientific articles. ..... publications.info@edqm.eu

All reference standards required for application of the monographs are available from the EDQM.
An updated catalogue of reference standards and a list of newly released reference standards (new reference standards and new batches) are available on the website http://crs.edqm.eu.

EUROPEAN PHARMACOPOEIA

EIGHTH EDITION

Volume 1

EUROPEAN PHARMACOPOEIA

EIGHTH EDITION

Volume 1

Published in accordance with the
Convention on the Elaboration of a European Pharmacopoeia
(European Treaty Series No. 50)

Council of Europe

Strasbourg

The European Pharmacopoeia is published by the Directorate for the Quality of Medicines & HealthCare of the Council of Europe (EDQM).

© Council of Europe, 67075 Strasbourg Cedex, France - 2013

All rights reserved. Apart from any fair dealing for the purposes of research or private study, this publication may not be reproduced, stored or transmitted in any form or by any means without the prior permission in writing of the publisher.

ISBN: 978-92-871-7525-0

CONTENTS

VOLUME 1

I. PREFACE i
II. INTRODUCTION v
III. EUROPEAN PHARMACOPOEIA COMMISSION ix
IV. CONTENTS OF THE EIGHTH EDITION xxi
GENERAL CHAPTERS
1. General notices 1
2. Methods of analysis 11
2.1. Apparatus 13
2.2. Physical and physicochemical methods 19
2.3. Identification 117
2.4. Limit tests 125
2.5. Assays 153
2.6. Biological tests 173
2.7. Biological assays 227
2.8. Methods in pharmacognosy 269
2.9. Pharmaceutical technical procedures 283
3. Materials for containers and containers 371
3.1. Materials used for the manufacture of containers 373
3.2. Containers 407
4. Reagents 423
5. General texts 551
GENERAL MONOGRAPHS 739
MONOGRAPHS ON DOSAGE FORMS 777
MONOGRAPHS ON VACCINES FOR HUMAN USE 815
MONOGRAPHS ON VACCINES FOR VETERINARY USE 919
MONOGRAPHS ON IMMUNOSERA FOR HUMAN USE 1027
MONOGRAPHS ON IMMUNOSERA FOR VETERINARY USE 1035
MONOGRAPHS ON RADIOPHARMACEUTICAL PREPARATIONS AND STARTING MATERIALS FOR RADIOPHARMACEUTICAL PREPARATIONS 1043
MONOGRAPHS ON SUTURES FOR HUMAN USE 1115
MONOGRAPHS ON SUTURES FOR VETERINARY USE 1125
MONOGRAPHS ON HERBAL DRUGS AND HERBAL DRUG PREPARATIONS 1133
MONOGRAPHS ON HOMOEOPATHIC PREPARATIONS 1427

VOLUME 2

MONOGRAPHS 1457
INDEX 3603

Note : on the first page of each chapter/section there is a list of contents.

I. PREFACE

The European Pharmacopoeia was inaugurated in 1964 through the *Convention on the Elaboration of a European Pharmacopoeia* under the auspices of the Council of Europe. The 8th Edition will be published just before the 50th Anniversary of the European Pharmacopoeia. The work of the European Pharmacopoeia has gone through a remarkable development since the first difficult years to its current strong position. The 3-year cycle of publication with thrice-yearly supplements has proven to be an efficient way to publish and update the results of the work of the European Pharmacopoeia Commission and its Expert Groups and Working Parties almost in real-time.

The monographs of the Pharmacopoeia, both specific and general, together with other texts made mandatory by virtue of reference to them in monographs, are applicable throughout the 37 member states, and the European Union, which is also a signatory party to the European Pharmacopoeia Convention. This means that in addition to applicability in all its member states, the European Pharmacopoeia has a special role in regulatory processes within the European Union. In addition to the 38 signatories of the European Pharmacopoeia Convention, there are also a large number of observers, comprising the World Health Organization and 23 countries, of which 16 are non-European. The quality standards developed through the European Pharmacopoeia therefore have an impact on the quality of medicinal products and substances far beyond the European region. Since the entry into force of the 7th edition, Ukraine has become a new member of the European Pharmacopoeia Convention (in 2013), while the Republic of Guinea and Singapore have become new observers (in 2012).

The 8 founder countries of the Convention realised in 1964 that manufacturing and quality control standards for medicinal products on the European Market had to be harmonised for reasons of public health and to facilitate free movement of these products. Since then, the pharmaceutical world has become globalised and international harmonisation among the 3 major pharmacopoeias (European Pharmacopoeia, Japanese Pharmacopoeia and United States Pharmacopeia) became a logical development. Harmonisation activities among these 3 pharmacopoeias started in 1989 when the Pharmacopoeial Discussion Group (PDG) was set up. The PDG has been working on monographs on widely-used excipients and 62 are included in its work programme. Soon after the PDG began work, it was recognised that the absence of harmonised general methods represented a significant obstacle. A wide range of general methods (35) have since been added to the work programme, including those from the work of the International Conference on Harmonisation (ICH) and, in particular, its guideline on setting specifications (Q6A). To date, 28 of the 35 general methods and 43 of 62 excipient monographs have been harmonised. Detailed information on the work programme of the PDG is published regularly in *Pharmeuropa* and in *General Chapter 5.8. Pharmacopoeial harmonisation*.

However, it is evident that harmonisation between the 3 ICH regions is not enough in today's world, where a high percentage of Active Pharmaceutical Ingredients (APIs) come from outside Europe, Japan and the USA. In early 2012, the WHO took the initiative and convened the pharmacopoeias of the world for their first international meeting in Geneva. The discussions at this level clearly identified the need to strengthen collaboration among pharmacopoeias worldwide. Based on the experience and challenges with existing harmonisation initiatives such as PDG that focus on retrospective harmonisation, it was decided to take a different approach. World pharmacopoeias will now work on harmonising their policies and approaches towards monograph development by drafting what have been termed as a working title "Good Pharmacopoeial Practices". Convergence in policies, *e.g.* with regard to control of impurities by applying ICH Q3 principles, will facilitate future collaboration and harmonisation.

The implementation date for the 8th Edition is 1 January 2014 and this edition will, over the next 3 years, be augmented with 8 supplements containing the texts adopted at the sessions of the European Pharmacopoeia Commission. As ever, it is published in the 2 official languages of the Council of Europe, i.e. English and French, both as a printed version and electronically (online and on a USB key). It is noteworthy that certain member states undertake national or regional translations, which they incorporate into their own national pharmacopoeias.

The work programme of the European Pharmacopoeia is decided by the European Pharmacopoeia Commission, the governing body of the Pharmacopoeia. Elaboration and approval of monographs and other texts proceed through an efficient and transparent process, which is based on scientific co-operation between the members of the various Groups of Experts and Working Parties set up by the European Pharmacopoeia Commission. These experts give their time, expertise and experience to produce public standards of the highest quality - standards that are continually revised in line with scientific developments. The members of these groups come from regulatory authorities, official medicines control laboratories, pharmaceutical and chemical manufacturers, universities and research institutions. All monographs are experimentally verified and submitted for public consultation by online publication in *Pharmeuropa*, the forum of the European Pharmacopoeia, before adoption and publication.

The growing number of monographs and the need to keep them updated represents an increased workload and an increased need for experts with access to experimental facilities. The working procedures for the elaboration of monographs are:

- *Procedure 1*: traditional elaboration by Groups of Experts and Working Parties.
- *Procedure 2*: adaptation of national monographs. (*This procedure is no longer used since the work has been completed.*)
- *Procedure 3*: elaboration of monographs on chemical substances produced only by one manufacturer and typically close to patent expiry. The manufacturer and national pharmacopoeia authority in the country where the substance is produced elaborate preliminary drafts and check the requirements experimentally. This results in a draft that is then reviewed by a Group of Experts or Working Party and processed in the usual way by public enquiry. (*This procedure has been integrated into Procedure 4.*)
- *Procedure 4* (P4): a modified version of Procedure 3 for substances still under patent, which was introduced by the European Pharmacopoeia Commission in 2002. The P4 procedure involves collaboration between the manufacturer of the substance and a Working Party solely composed of representatives of authorities and the EDQM. Together they prepare a draft monograph with experimental verification by the EDQM laboratory and/or by national pharmacopoeia authorities or Official Medicines Control Laboratories before publication for public enquiry.
- *Procedure 5*: applies to monographs on raw materials and stocks for homoeopathic preparations authorised for use in the member states. The work is co-ordinated by the

EDQM and overseen by the HOM Working Party. This procedure was introduced by the European Pharmacopoeia Commission in 2011.

Work under the P4 procedure has successfully continued during the elaboration of the 7th Edition. Already 59 P4 monographs for chemical substances have been adopted by the European Pharmacopoeia Commission. Under the P4 procedure for chemical substances, a pilot project on bilateral prospective harmonisation of active substance monographs with the USP was initiated and so far has resulted in the adoption of 4 harmonised monographs. As the P4 procedure for chemical substances has been such a success, the European Pharmacopoeia Commission decided in 2009 to initiate a similar process for biological substances. The so-called P4-BIO procedure takes account of the increasing number and importance of biologically-derived active substances and biosimilars on the European market. Two monographs elaborated by the P4-BIO procedure have already been adopted by the European Pharmacopoeia Commission.

The work on controlling impurities, a particular strength of the European Pharmacopoeia, has continued. Monographs are evaluated and approved by the Competent Authorities of member states, and the impurity profiles covered by these monographs reflect the existing, approved routes of synthesis. A revision mechanism is in place for newly-approved products (*e.g.* new sources, new routes). The analytical methods in monographs are robust and validated and are based on collaborative laboratory testing. The monographs reflect regulatory practice by applying ICH guideline Q3A R to the pharmacopoeial substances. The guideline of the European Medicines Agency (EMA) concerning the control of genotoxic impurities, which came into force in 2007, has also been taken into account and has resulted in a revision of the general monograph on *Substances for Pharmaceutical use (2034)* and adoption of 3 general methods for genotoxic impurities.

The European Pharmacopoeia Commission is also continuing its efforts to reduce the number of animals needed to perform tests (implementation of the 3Rs principle, i.e. replacing, refining and reducing the use of animals in tests). It has aligned pharmacopoeial texts with VICH Guidelines 41 (test for reversion to virulence) and 44 (developmental safety tests), which came into force in 2008 and 2009, respectively, and with Directive 2010/63/EU of the European Parliament and of the Council of 22 September 2010 on the protection of animals used for scientific purposes. Furthermore, to ensure consistency with European regulations the European Pharmacopoeia Commission has harmonised all the veterinary vaccine monographs, including monographs on vaccines intended for species that were outside the scope of the VICH Guidelines. As a consequence, the safety tests and the tests for increased virulence performed during development of the vaccines have been harmonised, which will greatly reduce the number of animals used for testing.

The European Pharmacopoeia Commission continuously revises general texts and monographs, re-evaluates the relevance of animal tests mentioned in European Pharmacopoeia texts and, if deemed appropriate, includes alternative methods. The general monograph on *Vaccines for veterinary use (0062)* was revised to delete the TABST (target animal batch safety test), except in 'particular circumstances' to cover the need to perform, on an ad hoc basis, further testing and safety tests in particular. In the interest of the 3Rs, the European Pharmacopoeia Commission also adopted the deletion of the TABST from the European Pharmacopoeia for all veterinary vaccines. Currently, at the European Pharmacopoeia level, animals are no longer used in the testing of medicinal products derived from human blood and plasma. In many cases, *in vivo* testing has been replaced by *in vitro* methods for human and veterinary vaccines. For the remaining *in vivo* assays, different strategies are being used to promote reduction and refinement of animal use, *e.g.* serology assays or single dilution assays for diphtheria, tetanus, acellular pertussis and rabies (veterinary/human) vaccines.

A number of important European Pharmacopoeia activities have been initiated over the last few years, such as the establishment of a PAT *(Process Analytical Technology) Working Party* based on a request from the EMA. PAT tools make it possible to use additional information collected throughout the production process, *e.g.* use of NIR (near-infrared spectrophotometry) to determine tablet content. *Chapter 2.2.40 Near Infrared Spectrophotometry* was revised to introduce PAT-related concepts such as in-line and on-line measurements. This was done in close consultation with the EMA's CVMP/CHMP Quality Working Party so that it would be aligned with the on-going revision of the EMA's *Note for guidance on NIR*. The revised chapter was adopted by the European Pharmacopoeia Commission at its November session in 2012 and it will be complemented by the revised EMA *Guideline on the use of near infrared spectroscopy by the pharmaceutical industry and the data requirements for new submissions and variations*, which is expected to be finalised in 2013. The General Notices will be updated to take account of real-time release testing, which will be done once the EMA Guideline has been adopted. The alternative, optional *Chapter 2.9.47. Demonstration of Uniformity of Dosage Units (UDU) using large sample sizes* that could be used to replace conventional UDU testing has also been adopted. The PAT Working Party is now reflecting on the need for new general chapters.

A Heavy Metals Working Party has been created to implement the EMA's *Guideline on metal catalysts and metal reagent residues* and the future ICH Q3D guideline. The terms of reference for this working party are to draft a general chapter to implement the guideline, to assess the capability of the current *Chapter 2.4.8. Heavy metals* to appropriately limit the priority metals mentioned in the guideline and to consider the introduction of instrumental screening methods, whilst also allowing other means of ensuring compliance where possible and justified. Since the ICH guideline has not yet been published, it was decided to introduce a new *General Chapter 5.20. Metal catalyst or metal reagent residues* and a new *General Method 2.4.20. Determination of metal catalyst or metal reagent residues*. *General Chapter 5.20* reproduces the EMA's guideline on the specification limits for residues of metal catalysts or metal reagents. It is applicable to all excipients and APIs, except those for veterinary use only, but not to starting materials or herbals. *General Method 2.4.20* describes the general approach for the determination of metal catalyst or metal reagent residues in substances for pharmaceutical use. As the chemical composition of the substances and the specification limits for the metal(s) of interest vary considerably, it is not possible to describe all suitable sample preparation and measurement methods. Therefore, any method that fulfils the requirements described in this chapter may be used. Both *General Chapter 5.20* and *General Method 2.4.20* have been published in European Pharmacopoeia supplement 7.7. A cross-reference is to be introduced into the general monograph on *Substances for Pharmaceutical Use (2034)* to make *General Chapter 5.20* legally-binding.

As a follow-up to the *Workshop on the future of monographs in the field of biologicals* organised by the EDQM in February 2011, 2 new working parties have been created: (1) the *Raw Materials for the Production of Cellular and Gene Transfer Products Working Party*, which will elaborate texts on raw materials such as antibodies, basal media (for cell culture), serum/serum replacements, growth factors and cytokines, and (2) the *Host Cell Proteins Working Party*, which will draft recommendations with regard to the development, validation and use of in-house or commercial kits or test methods for the detection and quantification of host cell-derived proteins. In addition, the scope of the P4-BIO pilot project

has been extended in order to elaborate monographs on one monoclonal antibody, one hormone/enzyme and one pegylated protein. The P4-BIO working party has also been asked to elaborate one finished product monograph. The terms of reference of the *Cell Therapy Products Working Party* have also been extended in order to elaborate a general text dealing with microbiological control of organs and tissues for human use, including preservation and other related media. As a consequence, the Working Party has been renamed the *Cell Therapy Products, Tissues and Organs Working Party*.

The production section of the monograph *Human normal immunoglobulin for intravenous administration (0918)* has been revised due to experience with an immunoglobulin preparation that caused an increased rate of thromboembolic complications. In light of concerns for public health associated with these thromboembolic events, the revised monograph will be implemented by the accelerated procedure.

Due to the increasing number of fraudulent activities and cases of adulteration, the European Pharmacopoeia Commission has decided to add a new section, *Potential Adulteration*, under § *1.4. MONOGRAPHS* of the General Notices. The need to include this section in individual monographs will be decided by the European Pharmacopoeia Commission on a case-by-case basis. The objective of this section is to make relevant information available to users of the European Pharmacopoeia to ensure the proper quality of medicinal products (i.e. active substances, excipients, intermediate products, bulk products and finished products). The new version of the General Notices was adopted by the European Pharmacopoeia Commission at its 140th session. In relation to this issue of adulteration, the Council of Europe and its EDQM have adopted a multi-level, anti-counterfeiting strategy comprising various aspects, such as legislative actions against pharmaceutical crime by means of the Medicrime Convention. This Convention is the first international treaty against counterfeit medical products and similar crimes involving threats to public health. In addition, the EDQM is developing eTACT; an anti-counterfeiting traceability service for medicines. The aim of eTACT is to ensure the traceability of individual packs of medicines using mass serialisation. It would allow each pack of medicine to be traced and verified by the different stakeholders in the legal supply chain. Patients would also be allowed to verify the authenticity of their medication. Governance of the eTACT system would be the responsibility of the EDQM as a public, inter-governmental organisation that is able to ensure the confidentiality of the data handled by the system.

Two additional new working parties have also recently been created: (1) the *Finished Product Monographs Working Party*, which aims to draft 2 monographs (i.e. on one single-source and one multi-source product) allocated to it by the European Pharmacopoeia Commission, while addressing issues related to the elaboration of chemically-defined finished products monographs in order to assess whether such monographs should be elaborated by the European Pharmacopoeia in the future, and (2) the *Second Identification Test Working Party*, which will prepare a guidance document that defines the criteria for inclusion of a second series of identification tests (solely intended to be carried out in pharmacies) in individual monographs and will review the methods and instrumentation available in pharmacies for this purpose.

Compliance with the EU REACH (Registration, Evaluation, Authorisation and Restriction of Chemical substances) Regulation has posed a significant challenge and this issue has been high on the agenda of the current Presidium. The European Pharmacopoeia Commission approved the request for the revision of 215 monographs as a consequence of the EU REACH Regulation and already several revised monographs have been adopted.

During the past 3 years I have had the honour, pleasure and privilege to serve the European Pharmacopoeia Commission as its 16th elected Chair. The task has been challenging, but also interesting and rewarding because of the insights it has given me into the various aspects of the development work that goes into the drafting of the quality standards provided by the texts of the Pharmacopoeia. It has also given me an insight into the many other important areas in which the EDQM is involved.

I wish to thank all the members of the European Pharmacopoeia Commission for the trust and support that allowed us to make substantial progress on a host of topics.

I would like to thank the Director of the EDQM, Dr Susanne Keitel, my two vice-chairs, Prof. Jos Hoogmartens and Ms An Lê, the Secretary to the European Pharmacopoeia Commission, Ms Cathie Vielle, and her two deputies, Dr Emmanuelle Charton and Dr Michael Wierer, for their excellent work and support during my time as Chair. Together as the Presidium, we have managed to work very effectively to guide the work of the European Pharmacopoeia Commission.

Finally, I would like to thank all the chairs and experts involved in the development of the European Pharmacopoeia and the staff of the EDQM for their support. Their availability, good advice and high quality input have made our work possible and a pleasure to do.

Dr Marianne Ek,

Chair of the European Pharmacopoeia Commission

February 2013

II. INTRODUCTION

The European Pharmacopoeia is prepared under the auspices of the Council of Europe in accordance with the terms of the Convention on the Elaboration of a European Pharmacopoeia (European Treaty Series No. 50) ('the Convention') as amended by the protocol to the Convention (European Treaty Series No. 134), signed by the governments of 37 member states (Austria, Belgium, Bosnia and Herzegovina, Bulgaria, Croatia, Cyprus, Czech Republic, Denmark, Estonia, Finland, France, Germany, Greece, Hungary, Iceland, Ireland, Italy, Latvia, Lithuania, Luxembourg, Malta, Montenegro, Netherlands, Norway, Poland, Portugal, Romania, Serbia, Slovak Republic, Slovenia, Spain, Sweden, Switzerland, 'the former Yugoslav Republic of Macedonia', Turkey, Ukraine and United Kingdom) and by the European Union.

The preparation of the European Pharmacopoeia is the responsibility of the European Pharmacopoeia Commission ('the Commission'), appointed in accordance with article 5 of the Convention. It is composed of delegations appointed by the contracting parties. Each delegation consists of not more than 3 members chosen for their competence in matters within the functions of the Commission.

Observers from non-member states and international organisations are admitted to sessions of the Commission in accordance with the Rules of Procedure. Observers are at present admitted from: Albania, Algeria, Argentina, Armenia, Australia, Brazil, Canada, China, Georgia, Israel, Madagascar, Malaysia, Moldova, Morocco, Republic of Belarus, Republic of Guinea, Republic of Kazakhstan, Republic of Singapore, Russian Federation, Senegal, Syria, Tunisia, United States of America and the World Health Organization.

The Convention is open for signature by European countries and observer status can serve to familiarise European countries intending to become signatories with the working methods of the Commission. The Commission recognises that relations with countries outside Europe are essential in view of the globalisation of the supply chain for pharmaceuticals. Observer status for non-European countries helps to foster these relations by facilitating regulatory partnerships and the exchange of information and working documents.

The functions of the Commission established by article 6 of the Convention as amended by the protocol are:

Article 6

"Subject to the provision of Article 4 of the present Convention, the functions of the Commission shall be:

(a) to determine the general principles applicable to the elaboration of the European Pharmacopoeia;

(b) to decide upon methods of analysis for that purpose;

(c) to arrange for the preparation of and to adopt monographs to be included in the European Pharmacopoeia and;

(d) to recommend the fixing of the time limits within which its decisions of a technical character relating to the European Pharmacopoeia shall be implemented within the territories of the contracting parties."

The European Directorate for the Quality of Medicines & HealthCare (EDQM) of the Council of Europe supports the Commission in the elaboration and revision of texts of the European Pharmacopoeia by providing the scientific secretariat. In addition, it is responsible for the establishment, production, monitoring and distribution of reference standards needed when applying the monographs. The EDQM is also active in a number of other areas related to the protection of public health, for example in certifying the quality of active pharmaceutical ingredients from specific sources and in biological standardisation.

In accordance with the terms of the Convention, the contracting parties undertake to take the necessary measures to ensure that the monographs of the European Pharmacopoeia shall become the official standards applicable within their respective territories.

PURPOSE OF THE EUROPEAN PHARMACOPOEIA

The purpose of the European Pharmacopoeia is to promote public health by the provision of recognised common standards for the quality of medicines and their components. Such standards are to be appropriate as a basis for the safe use of medicines by patients. In addition, their existence facilitates the free movement of medicinal products in Europe and beyond.

European Pharmacopoeia monographs and other texts are designed to be appropriate to the needs of:

- regulatory authorities;
- those engaged in the quality control of medicinal products and their components;
- manufacturers of medicinal products and their components.

The European Pharmacopoeia is widely used internationally. As globalisation and expansion in international trade present a growing need to develop global quality standards for medicines, the Commission works closely with all users of the Pharmacopoeia worldwide.

SEAT OF THE EUROPEAN PHARMACOPOEIA COMMISSION

The seat of the European Pharmacopoeia Commission is situated in Strasbourg, the headquarters of the Council of Europe.

GENERAL PRINCIPLES

General rules for interpretation of the texts of the European Pharmacopoeia are given in the General Notices. The following information should also be noted.

The general principles applied in the elaboration of monographs of the European Pharmacopoeia are laid down in procedures and in technical guides available on the EDQM website. The principles applied are revised from time to time without complete retrospective application so that monographs already published may not always follow the latest recommendations, but wherever an issue with an impact on public health is identified, monographs are revised.

It is recognised that general chapters are also used elsewhere than in the monographs of the European Pharmacopoeia; in these circumstances users are recommended to consult the relevant technical guide, which gives extensive information on the application of many of the methods.

General and individual monographs. The standards of the European Pharmacopoeia are represented by general and individual monographs. The use of general monographs has developed in recent years to provide standards that best fulfil the aims stated above and meet the needs of users. From the 4th Edition, the scope of general monographs was extended, except where otherwise stated, to cover products where there is no individual monograph. It is now usually necessary to apply one or more general monographs along with any individual monograph. Where a substance is subject to the provisions of both a general monograph and an individual monograph, the two are complementary. An individual monograph may, exceptionally, include an exemption from one or more provisions of the general monograph.

Since it is not practically possible to include in each individual monograph a cross-reference to applicable or potentially applicable general monographs, cross-referencing has been

discontinued except where it is necessary to avoid ambiguity. A list of general monographs is included in each new edition and supplement to aid users in identifying those that are needed for use with an individual monograph.

Use of animals. In accordance with the European Convention for the Protection of Vertebrate Animals used for Experimental and other Scientific Purposes (European Treaty Series No. 123) as amended by the protocol to the convention (European Treaty Series No. 170), elaborated under the auspices of the Council of Europe, the Commission is committed to the reduction of animal usage wherever possible in pharmacopoeial testing, and encourages those associated with its work to seek alternative procedures. An animal test is included in a monograph only if it has clearly been demonstrated that it is necessary to achieve satisfactory control for pharmacopoeial purposes.

Hydrates. Where applicable, the degree of hydration of a substance is indicated in the monograph title. For existing monographs where this is not yet the case, the degree of hydration will be introduced into the title during the next technical revision of the monograph (including publication in Pharmeuropa Online). If monographs are published for both the anhydrous form and a hydrated form of a given substance, 'anhydrous' is included in the title of the relevant monograph.

Chiral substances. Monographs on chiral substances that describe a particular enantiomer have a test to confirm enantiomeric purity, usually by measurement of optical rotation. According to the current policy, a test for racemic character using optical rotation is included only if there is information on the specific optical rotation of the enantiomers that indicates that such a test would be discriminating in terms of enantiomeric purity. If other techniques, such as circular dichroism, can serve the intended purpose, they will be prescribed instead of optical rotation.

Polymorphism. Where a substance shows polymorphism, this is usually stated under Characters. In general, no particular crystalline form is required in monographs; exceptionally, in a few monographs, the crystalline form required is specified, for example, via an infrared absorption spectrophotometric identification test where the spectrum is required to be recorded using the substance in the solid state without recrystallisation, the chemical reference substance provided being of the required crystalline form. However, for substances other than these exceptional cases, depending on the use of a given substance in a dosage form, it may be necessary for a manufacturer to ensure that a particular crystalline form is used. The information given under Characters is intended to alert users to the need to evaluate this aspect during the development of a dosage form. The general monograph *Substances for pharmaceutical use (2034)* and general chapter *5.9. Polymorphism* should also be consulted.

Specificity of assays. For the elaboration of monographs on chemical active substances, the approach generally preferred by the Commission is to provide control of impurities (process-related impurities and degradation products) via a well-designed Tests section, with stability-indicating methods, rather than by the inclusion of an assay that is specific for the active moiety. It is therefore the full set of requirements of a monograph that is designed to ensure that the product is of suitable quality throughout its period of use.

Impurities. Following a review of policy on control of impurities, general chapter *5.10. Control of impurities in substances for pharmaceutical use* was included as of the 5th Edition. Together with the general monograph *Substances for pharmaceutical use (2034)*, it describes the policy of controlling impurities in individual monographs and provides explanations on how the limits in the related substances test should be understood.

The current general policy of the Commission is to include quantitative tests for impurities in monographs. Most of the older monographs elaborated before the establishment of this policy have been revised to introduce quantitative methods. Where a monograph does not conform to the general policy, compliance with the general monograph *Substances for pharmaceutical use (2034)* implies that the individual monograph requirements need to be supplemented accordingly.

Except where required for the application of the monograph, in which case the name is followed by 'CRS', impurities are not provided as reference standards nor can they be provided for experimental purposes.

Chromatographic columns. As an aid to users, information is made available, via the website (see also Knowledge database, below), on chromatographic columns that have been found to be satisfactory during development of monographs and general methods. Information is also given on other equipment and reagents where this is considered useful. This information is given without warranty and does not imply that other columns, equipment or reagents than those specified are not suitable.

Residual solvents. The requirements for residual solvents are given in the general monograph *Substances for pharmaceutical use (2034)* and general chapter *5.4. Residual solvents*. Thus all active substances and excipients are subject to relevant control of residual solvents, even where no test is specified in the individual monograph. The requirements have been aligned with the ICH guideline on this topic.

Heavy metals. Limits for residues of metal catalysts or metal reagents as defined in the respective guideline of the European Medicines Agency are reproduced in general chapter *5.20*. The requirements laid down in this chapter are not legally binding for users of the European Pharmacopoeia as long as the chapter is not cross-referenced in a monograph (e.g. in the general monograph *Substances for pharmaceutical use (2034)*). The Commission plans to replace this chapter once the new ICH guideline for metal impurities, which is currently being drafted, becomes available. Meanwhile, the Commission has decided not to devote further resources to revising existing tests (using method C or D) or creating new tests using general chapter *2.4.8. Heavy Metals*.

Homoeopathic preparations. A monograph on methods of preparation of homoeopathic stocks and potentisation, general monographs on homoeopathic preparations, mother tinctures for homoeopathic preparations and herbal drugs for homoeopathic preparations, and individual monographs on raw materials and stocks for homoeopathic preparations are included in a separate section in Volume 1. It is understood that when the same substance is used in both homoeopathic and other preparations then the monograph in the main body of the European Pharmacopoeia applies.

Herbal drugs and herbal drug preparations (including traditional Chinese medicines). All relevant monographs are grouped together in a separate section in Volume 1.

Functionality-related characteristics. Following a policy decision of the Commission to highlight the need for attention to functionality-related characteristics of excipients and to foster harmonisation of methods for their evaluation, an informative section has been created in the monographs. The contents of this section do not constitute mandatory requirements but the characteristics may be relevant for a particular use of an excipient. The characteristics may be presented in different ways:

- citing the name only;
- citing the name and a suitable test method, preferably one included in the European Pharmacopoeia;

– citing the name, a suitable test method and typical values or tolerances on the stated value; these values or tolerances are used to define a suitable grade of an excipient for a particular use.

In all cases, the method and acceptance criteria are not mandatory requirements but are given for guidance. The decision to control a functionality-related characteristic of an excipient remains with the pharmaceutical manufacturer and is taken with knowledge of the formulation of the product in which it is to be used; the method of determination, acceptance criteria and tolerances are determined on a contractual basis by the user and the supplier of the excipient.

Patents. The description in the European Pharmacopoeia of articles subject to protection by patent does not confer or imply any right to the use of such patents by any person or persons other than the proprietors of the patents concerned.

Chemical Abstracts Service (CAS) registry number. Since the 6th Edition, CAS registry numbers have been included for information in monographs, where applicable, to provide convenient access to useful information for users. Previously these numbers were given only for reagents, where they are of use in locating suppliers. CAS Registry Number® is a registered trademark of the American Chemical Society.

Protected species. Monographs, notably those on herbal drugs, may cover material obtained from protected species. Inclusion of these monographs is without prejudice to the provisions for protection of these species by national and international law.

MONOGRAPHS ON PHARMACEUTICAL PREPARATIONS

Up to the 8th Edition, individual monographs on pharmaceutical preparations have not been elaborated, with a few exceptions, e.g. those on immunosera for human use, immunosera for veterinary use, some biological preparations such as insulin preparations, radiopharmaceutical preparations, vaccines for human use and vaccines for veterinary use.

The general monograph *Pharmaceutical preparations (2619)* was introduced in the 7th Edition. This monograph is intended to be a reference source of standards in the European Pharmacopoeia on active substances, excipients and dosage forms, which are to be applied in the manufacture/preparation of pharmaceuticals; it is not intended to be a guide on how to manufacture, as there is specific guidance available covering methods of manufacture and associated controls.

Harmonisation and standardisation for pharmaceutical preparations have so far been dealt with via the drafting of general dosage form monographs setting out elements common to all preparations within the scope of the monograph, and via the development of standard test methods used for testing of finished products. The inclusion of these general monographs and methods in the European Pharmacopoeia gives a common basis for competent authorities and manufacturers in the preparation and evaluation of applications for marketing authorisation. However, during its 143rd session, the Commission decided to revisit its policy and initiate a pilot phase on individual pharmaceutical preparation monographs to investigate further their feasibility and usefulness.

Reference standards established for the assay of active substances and excipients may be suitable for use as assay standards for preparations when the conditions stated in general chapter *5.12. Reference standards* are fulfilled.

WORK PROGRAMME

The work programme (elaboration of new monographs or general chapters or revision of existing texts) is decided by the Commission at one of the three annual sessions. In general, whenever 2 member states express a wish to elaborate a monograph, the Commission adds the item to the work programme. Changes to the work programme are published on the EDQM website and in Pharmeuropa Online. Information is also provided to industry associations registered with the secretariat and to manufacturers' liaison contacts. Interested parties are invited to contact the secretariat for any items where they wish to be involved in the work.

CERTIFICATION PROCEDURE

A procedure for the certification of suitability of monographs of the European Pharmacopoeia with respect to quality control of a product from a given source has been established (see Public Health Committee (Partial Agreement) Resolution AP-CSP (07) 1 or any subsequent revision, available from the EDQM and on its website) as an aid to the use of monographs in applications for marketing authorisation. The certification procedure also applies to herbal drugs, herbal drug preparations and transmissible spongiform encephalopathy (TSE) risk. Certificates of suitability are issued by the EDQM only for substances produced under a suitable quality system. Certificates are granted with respect to published monographs. Details of the operation of this scheme are available from the secretariat and on the EDQM website. A daily updated list of certificates granted is available online on the EDQM website, including voided or suspended certificates.

PUBLICATIONS

The official version of the European Pharmacopoeia is available in English and in French, in the form of a book with 3 supplements per year, and in electronic format (online, including a tablet version, and on USB stick).

Archives. The European Pharmacopoeia Archives contain the 1st Edition to 7th Edition in PDF format. They are available to all European Pharmacopoeia subscribers with an up-to-date subscription (paper, online or USB stick) and a registered EPID code.

Pharmeuropa, the European Pharmacopoeia forum, is published 4 times per year as an aid for the elaboration of monographs and as a vehicle for information on pharmacopoeial and related matters. Pharmeuropa Bio & Scientific Notes, a publication indexed by bibliographic services, includes scientific papers related to the establishment of biological reference preparations and validation of biological methods within the Biological Standardisation Programme of the EDQM, and to various aspects of pharmaceutical analysis and other subjects relevant to the European Pharmacopoeia. Since 2012, both publications are only available online, free of charge, and individual drafts and scientific papers are published on an ongoing basis.

Website. Information on activities and many other aspects of the European Pharmacopoeia is to be found on the EDQM website.

Knowledge database. The EDQM website provides access to a database containing information of various sorts related to monographs and intended to facilitate their proper use. Information is provided on:

– chromatography columns used in monograph development;
– suppliers of reagents and equipment that may be difficult to find for some users;
– the status of monographs (in development, adopted, published, under revision);
– revisions of the monographs on a historical basis, beginning from the 5th Edition;
– other useful information.

HelpDesk. Many technical and other enquiries are addressed to the EDQM by users. They should be submitted via the HelpDesk on the EDQM website. The EDQM will deal with enquiries that are related to the use of monographs of the European Pharmacopoeia. The HelpDesk has a section of Frequently Asked Questions that should be consulted by users before submission of an enquiry.

Implementation. The date on which monographs are to be implemented is fixed by a resolution of the European Committee on Pharmaceuticals and Pharmaceutical Care (Partial Agreement) of the Council of Europe, following a recommendation by the Commission. This date is usually 1 year after adoption and about 6 months after publication. Where a monograph is to be implemented at a date earlier than the next publication date of the European Pharmacopoeia or a supplement, a resolution of the European Committee on Pharmaceuticals and Pharmaceutical Care gives the full text to be implemented. The text is also published in Pharmeuropa Online for information and posted on the EDQM website as part of the resolution.

Revision programme. Monographs and other texts of the European Pharmacopoeia are revised as necessary following a decision of the Commission. Revision proposals are published in Pharmeuropa Online. Proposals to revise monographs may be submitted by a delegation, by the Chair of the Commission or by the chair of a group of experts. Requests for revision from other parties should be submitted via the national pharmacopoeia authority of a member state or, where this is not possible, to the EDQM via the HelpDesk. Proposals to revise monographs must be accompanied by sufficient data to justify the need for revision.

COMBISTATS

Certain tests in monographs, particularly biological assays, require statistical analysis of the results. The EDQM has developed a computer programme, CombiStats, that can be used for statistical analysis of results of biological dilution assays. Information on the programme, with conditions of access and use, is available on the EDQM website.

INTERNATIONAL HARMONISATION

Globalisation and expansion in international trade present a growing need to develop global quality standards for medicines. Standards are a vital instrument for marketing authorisations, market surveillance, and free movement and trade of medicines between regions and countries. The European Pharmacopoeia is engaged in a process of harmonisation with the Japanese Pharmacopoeia and the United States Pharmacopeia, within an informal structure referred to as the Pharmacopoeial Discussion Group (PDG). Information on the status of harmonised texts is given in general chapter *5.8. Pharmacopoeial harmonisation* and on the PDG page of the EDQM website.

Where harmonisation of general chapters is carried out, the aim is to arrive at interchangeable methods or requirements so that demonstration of compliance using a general chapter from one of the 3 pharmacopoeias implies that the same result would be obtained using the general chapter of either of the other pharmacopoeias. When a formal declaration of interchangeability has been recommended by the International Conference on Harmonisation (ICH), it will be indicated in general chapter *5.8. Pharmacopoeial harmonisation.* If residual differences remain in harmonised general chapters, information is given in this general chapter.

Where harmonisation of monographs is carried out, the aim is to arrive at identical requirements for all attributes of a product. Information on any non-harmonised attributes is included in general chapter *5.8. Pharmacopoeial harmonisation*. Besides the PDG, the European Pharmacopoeia is also actively involved in a number of other international harmonisation initiatives, such as the World Health Organization initiative of drafting 'Good Pharmacopoeial Practices' that may serve as a basis for future work-sharing and collaboration between the pharmacopoeias of the world.

III. EUROPEAN PHARMACOPOEIA COMMISSION

COMPOSITION OF THE COMMISSION, LIST OF EXPERTS AND OF THE SECRETARIAT (2012)

CHAIR AND VICE-CHAIRS OF THE COMMISSION

Chair	Marianne	EK
Vice-chairs	Jos	HOOGMARTENS
	An	LE

MEMBERS OF THE COMMISSION

Austria	Yvonne	GASPAR
	Friedrich	LACKNER
	Andreas	MAYRHOFER
Belgium	Katrien	VAN LANDUYT
Bosnia and Herzegovina	Alma	KISO
Bulgaria	Ljuba	KOSTOVA
	Svetla	BOGDANOVA
	Svetoslav	BRANCHEV
Croatia	Goran	BENKOVIC
	Mirela	FILIPEC
	Laila	STEFANINI ORESIC
Cyprus	Louis	PANAYI
Czech Republic	Hana	LOMSKA KOUBKOVA
	Milos	MACHACEK
Denmark	Steen Honoré	HANSEN
	Eva	SANDBERG
	Erik	WOLTHERS
Estonia	Signe	LEITO
	Juhan	RUUT
Finland	Marjo-Riitta	HELLE
	Eija	PELKONEN
	Piia	SALO
France	Alain	NICOLAS
	Marie-Lise	MIGUERES
Germany	Ulrike	HOLZGRABE
	Jochen	NORWIG
	Dietrich	KRÜGER
Greece	Michael A.	KOUPPARIS
	Alexandra	TSOKA
Hungary	Goran	BENKOVIC
	Hilda	KÖSZEGI-SZALAI
	Jozsef J.	LIPTAK
Iceland		
Ireland	Michael	MORRIS
	Noreen	QUINN
	Mirza	CATIBUSIC
Italy	Elena	BOSSU
	Eugenia	COGLIANDRO
	Carlo	PINI
Latvia	Ilze	BARENE
	Inta	KURAKINA
Lithuania	Roma	MOCKUTE
Luxembourg	Jacqueline	GENOUX-HAMES
	Jean-Louis	ROBERT
Malta	Clint	PACE
Montenegro		
Netherlands	Dries	DE KASTE
	Jan-Willem	DORPEMA
	Josée	M. HANSEN
Norway	Gunhild	BRUGAARD
Poland	Agnieszka	JOZWIAK
	Ewa	LECIEJEWICZ ZIEMECKA
	Jan	PACHECKA
Portugal	José Manuel	CORREIA NEVES SOUSA LOBO
	Domingos	DE CARVALHO FERREIRA
	Maria Joao	PORTELA
Romania	Anca	CRUPARIU
	Daniele	ENACHE
Serbia	Danica	AGBABA
	Marija	MALESEVIC
Slovak Republic	Marta	BENKOVA
	Ruzena	MARTINCOVA
	Jozef	SLANY
Slovenia	Tanja	TEKAVCIC GLOVER
	Uros	URLEB

Spain	Franco Carmen	FERNANDEZ GONZALEZ DE LA MORENA CRIADO
Sweden	Lennart Torbjörn Gert	AKERBLOM ARVIDSSON RAGNARSSON
Switzerland	Lukas Tobias Andreas H.	BRUCKNER GOSDSCHAN PFENNINGER
"The former Yugoslav Republic of Macedonia"	Aneta Tatjana	DIMITROVSKA PERUSEVSKA
Turkey	Eda Hanefi Bilge	AYPAR ÖZBEK SENER
United Kingdom	Samantha V'Iain	ATKINSON FENTON-MAY
European Commission	Agnès	MATHIEU
EMA	Riccardo	LUIGETTI

ALTERNATE MEMBERS

Austria	Johann Christian Josef	KURZ NOE TRENKER
Belgium	Luc René	ANGENOT HANSELAER
Bosnia and Herzegovina	Alija	UZUNOVIC
Bulgaria	Silvia	DIMITONOVA
Czech Republic	Hana Hana	BIZKOVA JUZOVA
Denmark	Lone	STENGELSHOEJ OLSEN
Estonia	Eveli Juhan	KIKAS RUUT
Finland	Tom	WIKBERG
France	Caroline	VILAIN
Germany	Gerhard Siegfried Detlef	FRANZ GIESS MANNS
Greece	Ioanna Anastasios	CHINOU MAKRITIS
Hungary	Tamas L. Tamas	PAAL NEMETH
Ireland	Susann Mirza	BRADLEY CATIBUSIC
Italy	Alessandra Loredana Christina	DELL'UTRI NICOLETTI VON HUNOLSTEIN
Lithuania	Valdemaras	BRUSOKAS
Luxembourg	M.	BACKES-LIES
Netherlands	Ellen Peter J.M. Yolanda	De ROOIJ-LAMME JONGEN VAN KOOIJ
Norway	Svein Rune Valborg	ANDERSEN HOLTEN
Poland	Jan Malgorzata	LUDWICKI SZNITOWSKA
Portugal	Rui	MORGADO
Serbia	Ljiljana	ZIVANOVIC
Slovak Republic	Daniel Ladislav	GRANCAI SOVIK
Slovenia	Barbara Ales	RAZINGER-MIHOVEC ROTAR
Sweden	My Eva	MOBERG LINDBERG
Switzerland	Laure Karoline Thomas	GIRARD MATHYS BADERTSCHER SCHREITMÜLLER
Turkey	Levent Ebru H. Gülçin	ALTUN CORA SALTAN
United Kingdom	Alastair Rodney Matilda	DAVIDSON HORDER VALLENDER

EXPERTS

H	ABBOUD
Valter	ACQUATI
Joel	AERTS
Neli	AGAPOVA
Danica	AGBABA
Abdelaziz	AGOUMI
Francisco	AGUILAR PARRILLA
Maqbool	AHMED
Lennart	AKERBLOM
Arnoud	AKKERMANS
Susanne	ALBAN
Goran	ALDERBORN

Keith	ALLEN
Mirandan	ALMEIDA
Concepcion	ALONSO VERDURAS
Levent	ALTUN
Ahmad	AMINI
Oliver	ANDERKA
Hans-Joachim	ANDERS
Svein Rune	ANDERSEN
Linda	ANDERSON
Thomas	ANDERSSON
Murielle	ANDRÉ
Luc	ANGENOT
Brigitte	ANLIKER
Peter	ANNEL
Marie-Christine	ANNEQUIN
Gunnar	ANTONI
Peter Georgiev	ANTONOV
Sandra	APERS
Jean Claude	ARGOUD
Alp	ARKAC
Steve	ARKLE
Sylvie	ARMEL
Rolf	ARNDT
Beatriz	ARTALEJO
Torbjörn	ARVIDSSON
Wilfried	ARZ
Nataliya Nikolaevna	ASMOLOVA
Samantha	ATKINSON
Sylvie	AUDOLY
Paolo	AURELI
Ofra	AXELROD
Eda	AYPAR
Mariette	BACKES LIES
Mamadou	BADIANE
Arlette	BAILLET GUFFROY
Ilze	BARENE
Sandra	BARNES
Maria	BARRETT
Dietmar	BARTSCHAT
K H C	BASER
Rudolf	BAUER
Alain	BAYOL
Wolfgang	BECK
Denis	BELLENOT
Silvana	BELLINI
Norbert	BENDA
Marta	BENKOVA
Goran	BENKOVIC
Gulnara	BERDIMURATOVA
Joep	BERGERS
Stéphane	BERNARD
Margarita	BERROCAL NAVAS
Poul	BERTELSEN
Agnès	BERTOCCHI
Serge	BESSET
Bohumir	BIBA
Anna Rita	BILIA
Jean Pierre	BINDER
Hanno	BINDER
Louise	BISSET
Hana	BIZKOVA
Knud	BJORNSON
Philippe	BLANCO
Marcelo	BLANCO ROMIA
Elham	BLOUET ABDELHAC
Katja	BOEGLI-STUBER
Svetla	BOGDANOVA
Gerrit	BORCHARD
Arantxa	BORDAS CAMPANA
Elena	BOSSU
Karina	BOSZKO
Yvonne	BOUWMAN BOER
Susann	BRADLEY
Anna Maria	BRADY
James Clifford	BRAIN
Svetoslav Valentinov	BRANCHEV
Helena	BRANDIN
Tomaz	BRATKOVIC
Susanne	BREITNER RUDDOCK
Harald	BREIVIK
Charlotte	BRENIER
Adrian Francis	BRISTOW
Neville	BROAD
Kirsten	BRONNUM HANSEN
Lukas	BRUCKNER
Rene	BRUEGGER
Ines Maria	BRUENTRUP
Gunhild	BRUGAARD
Peter	BRÜGGER
Biancamaria	BRUNO
Valdemaras	BRUSOKAS
Christian J	BUCHHOLZ
Volker	BÜHLER
Marian	BUKOVSKY
Rosario	BULLIDO
Jörg	BUND

Heike	BUNJES
Roger	BURGENER
Robert	BURMAN
Christiane	BUSCH
Jesus	CABANAS
Laurent	CABURET
Salvador	CANIGUERAL
Anna Maria	CAPPELLI
Pilar	CARRASCO SAINZ EZQUERRA
Monica	CARVALHO SOARES
Patricia	CATALAO
Mirza	CATIBUSIC
Adrian	CAWS
Richard	CAWTHORNE
Rajko	CEBEDZIC
Marina	CERQUETTI
Pierre	CHAMINADE
Kelvin	CHAN
Denis	CHAUVEY
Nuan Ping	CHEAH
	CHEN YIN QING
Carlos A	CHIALE
Keith	CHIDWICK
Ioanna	CHINOU
Vivienne	CHRIST
Stefan	CHRISTIANS
Maurizio	CIANGRIGLIA
Romolo	CICCIARELLI
Patrik	CINTHIO
Mihai	CIOBANU
Maija	CIRKINA
Corinne	CIVADE DELAY
Juan	CLARAMUNT CAMPANA
Eugenia	COGLIANDRO
Laurence	COLLIERE
Harald S	CONRADT
Anne	COOK
Ebru	CORA
Stéphane	CORNEN
Jose Manuel	CORREIA NEVES SOUSA LOBO
Desmond	CORRIGAN
Yves	CORTEZ
Martin	CRNUGELJ
Anca	CRUPARIU
Klaus	CUSSLER
Martina	CVELBAR
Elisabeth	DADOLE
Gerard	DAMIEN
Rolf	DANIELS
Teresa	DANNERT ALSASUA
David	DARRAS
Alastair	DAVIDSON
Domingos	DE CARVALHO FERREIRA
Josep M	DE CIURANA I GAY
Hendrik Jan	DE JONG
Dries	DE KASTE
Carmen	DE LA MORENA CRIADO
Ellen	DE ROOIJ LAMME
Berber	DE VRIES
Paul	DECLERCK
Clemens	DECRISTOFORO
Louis H T	DEDEREN
Alexandre	DELAVOLPILIERE
Alessandra	DELL UTRI
Isabelle	DELNEUVILLE
Joseph	DEMEESTER
L. Omur	DEMIREZER
Aysegul	DEMIRTAS
Stephen	DENYER
Sven	DEUTSCHMANN
Gines	DIAZ
Michèle	DIBOUNE
Milen	DIMITROV
Aneta	DIMITROVSKA
Papa Amadou	DIOP
Anica	DJAMIC
Johannes	DODT
Eric	DOELKER
Milada	DOLEZALOVA
Jan Willem	DORPEMA
Pierre	DUEZ
Alain	DUGUET
Stephen	EDGE
Erling	EHRIN
Marianne	EK
Lindsay	ELMGREN
Jürgen	EMIG
Daniela	ENACHE
Joerg	ENGELBERGS
Lena	ENGMAN
Ilkay	ERDOGAN ORHAN
Kristina	ERLANDSSON PERSSON
Lina	ERTLE
Jean Pierre	ETCHEGARAY
Adrian	EVANS

Marcus EVANS
Øystein EVENSEN
Huguette FABRE
Gemma FEENSTRA BIELDERS
Rainer FENDT
V'Iain FENTON MAY
Franco FERNANDEZ GONZALEZ
Rosella FERRETTI
Petra FESSER
Mirela FILIPEC
Lucy FINDLAY
Ton FÖRCH
Lucien FOSSE
Isabelle FOURASTÉ
Peer Lyng FRANDSEN
Bruno FRANK
Laura FRANQUEZA GARCIA
Gerhard FRANZ
Lars Vaelds FREDERIKSEN
Urban FREY
Erika FRIEDL
Gloria FRUTOS CABANILLAS
Pascal FURRER
Rose E GAINES DAS
Maria Cristina GALLI
Igor GAON
Dominique GARCIA
Gloria GARCIA LORENTE
Maria GARD
Olivier GARINOT
Piotr GARNUSZEK
Yvonne GASPAR
Uwe GASSER
Nick GATE
Matthias GAUTSCHI
Anne GAYOT
Andrea GAZZANIGA
Jacqueline GENOUX HAMES
Christoph GERBER
Philippe GERVAIS
Christian GEYER
Lilit GHAZARYAN
Nicole GIBELIN
Barbara GIESE
Siegfried GIESS
Michel GIRARD
Philippe GIRARD
Laure GIRARD
Daniel GLAUSER
Kazimierz GLOWNIAK
Tanja GMEINER STOPAR
Chris T GODDARD
Muge GOKDERE
Carine GOLAZ
Maria Jesus GOMEZ MIGUEL
Els GOOSSENS
Tobias GOSDSCHAN
Gianaluca GOSTOLI
Marcel GOVERDE
Tor GRABERG
Astrid GRAEFE
Tatjana GRAFNETTEROVA
Daniel GRANCAI
Yvan GRANGE
Kevin GRANT
Norbert GREIDZIAK
Gerhard GROHMANN
Kjell-Olov GRÖNVIK
Oliver GROSCHE
Nannette GROSS
Oleksandr GRYZODUB
Emanuel GUADAGNINO
Didier GUEDON
Thorsten GUMZ
Sylvie GUYOMARD DEVANLAY
Bert GYSBERG
René GYSIN
Klaus HABERER
Adrian HAEBERLI
Geertrui HAEST
Lilian HAMILTON
Thomas HÄMMERLE
Vagn Neerup HANDLOS
Kay-Martin HANSCHMANN
Rene HANSELAER
Steen Honoré HANSEN
Josee HANSEN
Bente Tange HARBO
Sebnem HARPUT
Kaare HASLOV
Jostein HATLELID
Ivana HAUNEROVA
Heribert HÄUSLER
Marjo-Riitta HELLE
Keith HELLIWELL
Peter HENCKEN

Bilkis	HENEKA
Martina	HENK
Peter	HENRYS
Harm	HERMSEN
Rolf	HESSELMANN
Tim	HEWINS
Sven Erik	HILLVER
Thomas	HINZ
Cornelia	HIPPCHEN
Jouni	HIRVONEN
Marjatta	HIRVONEN
Kowid	HO
Wolfgang Alexander	HOEPPING
Jörg	HOERNSCHEMEYER
Patrick	HOET
Andreas	HOFMANN
Oyvind	HOLTE
Valborg	HOLTEN
Ulrike	HOLZGRABE
Jos	HOOGMARTENS
Andrew	HOPKINS
Rodney	HORDER
Konrad	HORN
Ottmar	HORN LOHRENS
Michael	HÖRNIG
Matej	HORVAT
Erno	HORVATH
Thomas	HOTTIGER
Christian G	HOUGHTON
Rolf	HOVIK
Anthony R	HUBBARD
Cornelia	HUBER
Ronny	HUBINETTE
Peter	HUBRECHTS
Jana	HUMHEJOVA
Tiina	HUOTARI
Lars J	HUSAGER
Gérard	HUYGHE
Alexandra Maria Bagulho	INVERNO SAFARA
Iliana	IONKOVA
Canan	ISKENDEROGLU
Avi	ISRAELI
Evert	IZEBOUD
Elke	JAECKLE
Miia	JAKAVA VILJANEN
Planinka	JAKSIC
Armand	JANSSEN
Renaud	JANSSEN
Elena	JELIAZKOVA
Anna	JELINSKA
Jorgen Skov	JENSEN
Thomas G	JENSEN
Jana	JERABKOVA
Edgar	JOHN
Christopher	JONES
Allison	JONES
Peter M J M	JONGEN
Juan Ignacio	JORQUERA NIETO
Annelies	JORRITSMA-SMIT
Mats	JOSEFSON
Zarko	JOVIC
Agnieszka	JOZWIAK
Carmen	JUNGBACK
Hana	JUZOVA
Mohamed	KALLEL
Winfried	KAMMER
Elisabeth	KAMPHUIS
Tarja	KANKKUNEN
Mimi	KAPLAN
Imre	KAPUI
Rami	KARIV
Anders	KARLSSON
Sture	KARLSSON
Jan-Oliver	KARO
Petrus	KARSTEN
Pasi	KAUPPINEN
Hans	KEEGSTRA
Christoph	KEFEDER
Birgit	KEGEL
Naman	KEITA
Edwin	KELLENBACH
Ernst	KELLER
Melanie	KERST
Waltraud	KESSLER
Michael	KEUSGEN
Eveli	KIKAS
Alistair	KIPPEN
Karin	KIRCHDORFER
Christiane	KIRCHNER
Alma	KISO
Anne	KJOELBY
Robert	KLASSON
Caroline	KLEBER
Peter	KLEINEBUDDE
Bernhard	KLIER
Hector	KNIGHT CASTRO

Filiz
Hannelore
Mireille
Sabine
Valentina
Ljuba
Eniko
Hilda
Andrey
Michael A
Renata
Emil
Marija
Beate
Mateja
Adrian
Aldona
Katjusa
Siegfried
Thijs
Dietrich
Christof
Urs
Harry V
Inta
Johann
Herbert
Friedrich
Reinhard
Ellen
Stefan
Andreas
Reinhard
Thomas
Manuela
Mervi
Maria Grazia
Dorothée
Waldemar
An
Ondrej
Ewa
Gerard
Catherine
Thomas
Kristina
Ari
Stefan

KOC
KOPELENT FRANK
KOPF
KOPP
KOSENKO
KOSTOVA
KOSZEGI
KOSZEGI SZALAI
KOTOV
KOUPPARIS
KOVACOVA
KOZHUHAROV
KOZLOVIC
KRÄMER
KRAMER
KRAUSS
KRAWCZYK
KREFT
KRIMMER
KROON
KRUGER
KRUMMEICH
KUENZLE
KUPPERS
KURAKINA
KURZ
KVATERNIK
LACKNER
LAENGER
LAMME
LAMOTTE
LANG
LANGE
LANGE
LANGOS-MABBOUX
LANKINEN
LAVAGGI
LAY
LAZIK
LE
LEBEDA
LECIEJEWICZ ZIEMECKA
LEE
LEFEBVRE
LEHMANN
LEHMANN
LEHTOLA
LEINER

Erich
Signe
Ulla
Dmitro
Valérie
Jobst
Eva
Cornelia
Jozsef J
Lino
Anders
Philippe
Hana
Silvano
Karen
Susana
Sabina
Céline
Patrick
Jan
Hans
Ian
Milos
Suzana
Hans-Jürgen
Lourdes
Antonio
Mohamed Abdelmoumen
Anastasios
Daniel
Marija
Laurent
Dave
Paul
Tamara
Detlef
M B
Siarhei
Anca
Andreas
Dierk
Alessandro
Ana Paula
Graca
Walter
Karoline
Jaroslav
Andreas

LEITNER
LEITO
LENNMARKER
LEONTIEV
LIÈVRE
LIMBERG
LINDBERG
LIPPERHEIDE
LIPTAK
LIVERANI
LOFGREN
LOISEAU
LOMSKA
LONARDI
LONGSTAFF
LOPEZ HERNANDEZ
LORENZ
LORTEAU
LOUIS
LUDWICKI
LUNDBACK
LYNCH
MACHACEK
MACHADO DE AVILA
MACHULLA
MACUA PEQUENO
MAGNI
MAHLY
MAKRITIS
MALARME
MALESEVIC
MALLET
MALPAS
MALTBY
MANDUSIC NAZOR
MANNS
MANSOURI
MARCHANKA
MARCOVICH
MARTI
MARTIN
MARTINI
MARTINS
MATA
MATHEIS
MATHYS BADERTSCHER
MAXA
MAYRHOFER

Ian	MCEWEN
Roger	MEIER
Beat	MEIER
Luis Miguel	MEIRINHOS SOARES
Margarida	MENEZES FERREIRA
Monica	MENNET - VON EIFF
Geerd J	MEYER
Jacques	MICHAUD
John M	MIDGLEY
Giovanni	MIGLIACCIO
Marie Lise	MIGUERES
Robertas	MIKALAUSKAS
Paola	MINGHETTI
Monica	MIRANDA
Christine	MIRAS
Bojan	MITROVIC
My	MOBERG
Roma	MOCKUTE
Birthe	MOESGAARD
	MOHD ZIN CHE AWANG
Jürgen	MÜLLER KEMSA
Maria	MORAIS
Marta	MORENO CUARTAS
Rui	MORGADO
Sylvie	MORGEAUX
Michael	MORRIS J.
Saliha	MOUSSAOUI
Marie Anne	MOUYART
Carl	MROZ
Zdenka	MRVOVA
Heide	MUCKENFUSS
Marco Thomas	MUELLER
Christel	MÜLLER GOYMANN
Robert	MUENTZ
Ezra	MULUGETA
Sibel	MURATOGLU
Michael	MUTZ
Vera	MYSLIVCOVA
Eva Maria	NADAL ELDUAYEN
Paul	NÄTSCHER
Heidi	NEEF
Tamas	NEMETH
Peter	NEU
Robin A J	NICHOLAS
Steven C	NICHOLS
André	NICK
Alain	NICOLAS
Loredana	NICOLETTI
Anastasia	NIKITINA
Vittorio	NISTRIO
Christian	NOE
Kim	NORDFJELD
Darragh	NORTON
Ute	NORWIG
Jochen	NORWIG
Micha	NÜBLING
Adela	NUNEZ VELAZQUEZ
Susanne	ODGAARD HERR
Hok Liang	OEI
Silvester	OELZANT
Volker	OEPPLING
Martin	O'KANE
Jaap	OOSTENDORP
Samira	OMEROVIC
Didier	ORTELLI
Erik	OSTERGAARD
Rainer	OTTER
Hans Peter	OTTIGER
Carsten	OVERBALLE PETERSEN
Inge	OVERBY JENSEN
Hanefi	OZBEK
Esin	OZMENER SOZEN
Clint	PACE
Jan	PACHECKA
Ana	PADILLA MARROQUIN
Steffen	PAHLICH
Pilar	PAIS
Peter	PALLAS
	PAN XUE TIAN
Louis	PANAYI
Béatrice	PANTERNE
Yiannos	PAPADOPOULOS
Rosemary	PASK HUGHES
Paolo	PASQUALI
Stefan	PAUKER
Hugo	PEETERS
Eija	PELKONEN
Isabel	PEREZ GONZALEZ
Jean-Marc	PERSON
Tatjana	PERUSEVSKA
Jasmin	PESCHKE
Alain	PETIT
Francesco	PETRUCCI
Andreas H	PFENNINGER
Erik	PHILIPP
Gerson Antonio	PIANETTI

Roger D
Carlo
Marta
Melanie Eva
Bojan
Anja
Daniel
Klaus
Christelle
Wolfgang
Bertrand
Elizabeth
Frederic
Markus
Cécile
Maria Joao
Agustin
Bernard
Stanislav
Martin
Joachim
Joelle
Jose Carlos
Gert
Alain
Giuseppe
Isabel
Benoit
Paula Maria
Jean Rene
Jukka
Barbara
Klaus
Eike
Holger
Klaus
Joaquim Jose
Nathalie
Jean Louis
Helmut
Isabel
Jose Maria
Jacqueline
Tilmann
Judith
Michael

PICKETT
PINI
PIPIC KOSANOVIC
PIRES
PIRNAT
PISCHTIAK
PISCITELLO
PITTERTSCHATSCHER
PLANTARD
POHLER
POIRIER
POLLITT
POMMARAT
PONGRATZ
PONSART
PORTELA
PORTELA MOREIRA
PRILLEUX
PRIMOZIC
PUNZENGRUBER
QUEIROGA
QUETIN LECLERCQ
QUINTELA FERNANDEZ
RAGNARSSON
RAGON
RAMASCHI
RAMIREZ DE ARELLANO SERNA
RAMOND
RAMOS MARTINHO FIGUEIREDO
RANDRIASAMIMANANA
RANTANEN
RAZINGER MIHOVEC
REH
REICH
REIMANN
REITHMAYER
RIBAS PERDIGAO QUEIROGA
RIZZO PADOIN
ROBERT
ROCKSTROH
RODRIGO CASTRO
RODRIGUEZ PACHON
ROOS
ROOS
ROS FUENTES
RÖSSLER

Ales
Jacques
Sol
Torgny
Juhan
Knud
Christoph
Sirkku
Michael
Elena Ivanovna
Paula
Piia
H. Gulcin
Piero A
Eva
Sverre Arne
Monica
Hanife Ebru
Jeannot
Silke
Jürgen
Roger
Martin
Heidemarie
Ernst
Dirk
Birgit
Andreas
Stephan
Heinz
Martin
Thomas
Walter
Frank
Dieter
Harald
Volker
Utta
Karolina
Ruediger
Patricia
Jean Marc
Osman
Dorothea
Karin
Nicky
Irena
Caroline

ROTAR
ROTGER
RUIZ
RUNDLOF
RUUT
RYHL
SAAL
SAARELA
SAENGER
SAKANJAN
SALMIKANGAS
SALO
SALTAN
SALVADORI
SANDBERG
SANDE
SANTIMARIA
SARPAY
SCHELCHER
SCHEPELMANN
SCHERER
SCHIBLI
SCHIESTL
SCHINDL
SCHLÄFLI
SCHMALZ
SCHMAUSER
SCHMID
SCHMIDT
SCHMITTER
SCHOEFNAGL
SCHREITMUELLER
SCHUH
SCHULER
SCHULZ
SCHULZ
SCHULZE
SCHURIG
SCHWARZ SZEWCZUL
SCHWETZLER-RASCHKE
SCOGNAMIGLIO
SEIGNEURET
SENER
SESARDIC
SEWERIN
SHIPTON-YATES
SHUMELI
SIEBECKE

Heinz Wilhelm
Claudia
Glenda
Natercia
Francois
Kaarina
Marie-Louise
Wenche
Helena
Mikael
Jozef
Ineke
Jan W H
Glenn
Dean
Francesco
Therese
Stein
Delphine
Robert
Ladislav
Margot
Ingo
Alexandra
Axel
Lone
Willem
Peter
Erich Andreas
Metka
Rainer
Jasbinder
Sibel
Lennart
Filip
Beata
Julianna
Malgorzata
Karoline
Mathieu Jean-André
Herre
Fatih
Khalil
Pierre Cyril
Tanja
Tomas
Robin C
Ingela
SIESLER
SIGNORETTI
SILVESTER
SIMOES
SIMONDET
SINIVUO
SJÖHOLM
SKARE
SKOG
SKOOG
SLANY
SLAPER CORTENBACH
SMEETS
SMITH
SMITH
SOLINAS
SOLSTAD SAUNDERS
SOMMER
SORDAT FORNEROD
SOUSSAIN
SOVIK
SPOHN
SPREITZER
STAERK
STAHLBOM
STENGELSHOEJ OLSEN
STEVENS
STJÄRNKVIST
STOEGER
STOJICEVIC
SUCHI
SUMAL
SUZEN
SVENSSON
SVETOSLAVOV
SZABADY
SZEMAN
SZNITOWSKA
SZWARZ SZEWCZUL
TAFANI
TALSMA
TANIS
TAOUBI
TCHORELOFF
TEKAVCIC GLOVER
TESAR
THORPE
THORSON KAIJA
Jürgen
René
Marcos
Heinz Gerhard
Katarzyna
Carlo
Gabriella
Giangiacomo
Daniel
Eranui
Josef
Wilhelm
Hans-Peter
Catherine
Jean Hugues
Mathias
Lia
Alexandra
Michael
Ardak U
Michael
Peter
Zsofia
Jacqueline Léonore
Stefan
Michel
Uros
Ana Luisa
Alija
Claudia
Vladimir
Matilda
Jan
Willem G
Hans
Yolanda M.A.W
Katrien
Bernard
Jos
Ann
Paul
Markus
Alfons
Geert
Christopher H
Peep
Jaana
Francesco
THUERK
THÜRMER
TIMON JIMENEZ
TÖLLE
TOMASZEWSKA
TOMBA
TOROK
TORRI
TOUW
TOVMASYAN
TRENKER
TRENTMANN
TRIERWEILER
TROUBAT
TROUVIN
TRUYENS
TSIKLAURI
TSOKA
TUBBY
TULEGENOVA
TÜRCK
TURECEK
TUSKE
TUXEN WISSING
TYSKI
ULMSCHNEIDER
URLEB
URMAL RIBEIRO
UZUNOVIC
VALDER
VALICA
VALLENDER
VAN DER NAT
VAN DER SLUIS
VAN DOORNE
VAN KOOIJ
VAN LANDUYT
VAN GENUGTEN
VAN ROMPAY
VAN SCHEPDAEL
VARLEY
VEIT
VERBRUGGEN
VERDONK
VERMAAT
VESKI
VESTERINEN
VILLA

Philippe	VILLATTE
Maria Rosa	VIRTO GARCIA
Eva	VITKOVA
Caroline	VOLTZ-GIROLT
Christina	VON DER HEIDT
Christina	VON HUNOLSTEIN
Elvedina	VRANJES
Imran	VURAL
Geneviève	WAETERLOOS
Hermann	WAETZIG
Rik	WAGENAAR
Thierry	WAGNER
Frank	WAIMER
Anna	WALLINDER MARKLUND
Mei	WANG
Shu-Yuan	WANG-TSCHEN
Peter	WASCHICZEK
Claude	WASTIEL
Marjolein	WEDA
Mark	WEINSTEIN
Wigand	WEIRICH
Irmgard	WERNER
Ingrid	WERNER
Michael	WHALEY
Brian	WHITE
Michael	WIEDMANN
Tom	WIKBERG
Markus	WILD
Brigitte	WILD
Maria	WILHELM
Tore W	WILHELMSEN
Klemens	WINNA
Maria	WIRZ
Vincent	WISARD
Jacqueline	WISSING
Bengt	WITTGREN
Petra	WLASAK
Juliane	WOEGERER
Bernhard	WOLF
Uwe	WOLLEIN
Erik	WOLTHERS
A David	WOOLFSON
Kim	WUTHOLD
Michel	YERLY
Semra	YILMAZ
Stephen	YOUNG
Chun Ting	YUEN
Pilar	ZAMORANO SANCHEZ
Romana	ZELKO
Jorg	ZESSIN
Jürgen	ZIRKEL
Ljiljana	ZIVANOVIC
Hans-Joachim	ZOLLER
Gijsbert	ZOMER
Klaus	ZÜCHNER
Jorg	ZUERCHER

SECRETARIAT OF THE EUROPEAN PHARMACOPOEIA COMMISSION

Director (European Directorate for the Quality of Medicines & HealthCare)

Susanne	KEITEL

Scientific officers and assistants (Technical secretariat, Laboratory and Biological standardisation)

Cathie	VIELLE (Secretary to the Commission)
Michael	WIERER
Emmanuelle	CHARTON
Andrea	LODI
Stefan	ALMELING
Jean-Marc	SPIESER
Karl Heinz	BUCHHEIT
Béatrice	ANDLAUER
Susanne	BAHRKE
Melanie	BALD
Aurélie	BARTH
Maria Silvana	BELLINI
Anne-Sophie	BOUIN
Angèle	COSTANZO
Arnold	DAAS
Philippe	DURET
Anne	GAREL
Anne	GARNIER-POIDEVIN
Sylvina	IOSSIPHOVA
Brigitte	JACQUEL
Sylvie	JORAJURIA
Franck	JUNG
Lynn	KELSO
Catherine	LANG
Gisèle	LOUIS
Julia	MAIER
Isabelle	MERCIER
Catherine	MILNE
Robert	NEUGEBAUER
Jochen	PAUWELS
Ellen	PEL
John	QUINN
Guy	RAUTMANN

Ulrich	ROSE
Cristiana	SABATINI-SAMORI
Michèle	SCHOTT
Monica	SORINAS JIMENO
Laure	TACONET
Eriko	TERAO
Marianne	THEBAUT
Eva	VITKOVA
Matthias	WEBER
Stephen	WICKS
Brigitte	WILD
Sally	WOODWARD

Publications

Misel	JEVTIC
Hans-Joachim	BIGALKE
Isabelle	BYLINSKI
David	CROWE
Ioulia	IANKOVA
Christopher	JARVIS
Carole	KNAUP
Mathieu	MARRE
Bao Thanh	NGUYEN VAN
Catherine	NICOLAS
Laura	O'TOOLE
Uwe	PIOCH
Alice	ROBERTS
Sabine	SCHAEFFER
Lynne	TOUMASSON
Isabelle	VERNAY

Quality

Pierre	LEVEAU
Jonna	SUNELL-HUET

Reference standards

Vincent	EGLOFF
Fanny	MOUTIER-GAME
Maurice	TENDERO

Translation

Michelle	BACQUE
Benoît	BERNARD
Rex	HUISH

Public relations

Caroline	LARSEN-LE TARNEC
Fiona	GILCHRIST

Expert consultants

Marie-Thérèse	BALDACINI
Armand	BLOMMAERT
Raymond	BOUDET-DALBIN
Isabelle	FOURASTE

IV. CONTENTS OF THE 8th EDITION

The 8th Edition consists of all texts published in the 7th Edition, which may subsequently have been revised or corrected, and new texts.

For the information of the reader, lists are given below of monographs and general chapters that are new, or that have been revised or corrected, and texts whose title has been changed for the 8th Edition.

The version date (for example 01/2014 for a text that is new or revised for the 8th Edition), completed by 'corrected X.X' if a corrected version of the text has subsequently been published in Supplement X.X, and the reference number (4 digits for monographs and 5 digits for general chapters) are specified above the title of each text (monographs and general chapters). The version date, completed by 'corrected X.X' if appropriate, makes it possible to identify the successive versions of texts in different editions.

From the 7th Edition, if a text has not been revised for a new edition, the version date published in the previous edition is kept in order to improve traceability. The volume in which this version has been published for the first time is stated in the Knowledge database on the EDQM website.

A vertical line in the margin indicates where part of a text has been revised or corrected. A horizontal line in the margin indicates where part of a text has been deleted. However, these indications, which are not necessarily exhaustive, are given for information and do not form an official part of the texts. Editorial changes are not indicated.

Lines in the margin that were present in revised or corrected texts in the previous edition are deleted with each new edition.

Corrections that are indicated by the note 'corrected 8.0' under the version date are to be taken into account from the publication date of the volume.

For the 8th Edition, the following decisions and systematic modifications to the texts of the European Pharmacopoeia have been made.

- Common logarithms are now indicated by $\log_{10}$.
- The wording used in the tests for chlorides, sulfates, calcium, iron and magnesium in monographs has been updated according to the style guide.
- Reagent names have been modified to improve the functioning of the hyperlinks in the electronic version of the European Pharmacopoeia.
- The graphical representation of saccharides has been harmonised; the graphical representation of insulins has been harmonised.

Individual copies of texts published in this edition will not be supplied.

Subscribers to the current version (printed or electronic) of the European Pharmacopoeia have access to an archive version of all previous editions of the European Pharmacopoeia.

NEW TEXTS INCLUDED IN THE 8th EDITION

*The texts below appear for the first time in the European Pharmacopoeia. They will be implemented on **1 January 2014** at the latest.*

GENERAL CHAPTERS

2.2.66. Detection and measurement of radioactivity

MONOGRAPHS

Radiopharmaceutical preparations and starting materials for radiopharmaceutical preparations

Alovudine (^{18}F) injection (2460)

Fluoromisonidazole (^{18}F) injection (2459)

Herbal drugs and herbal drug preparations

Belamcanda chinensis rhizome (2561)

Eclipta herb (2564)

Eucommia bark (2412)

Fleeceflower root (2433)

Fraxinus rhynchophylla bark (2452)

Mandarin epicarp and mesocarp (2430)

Saw palmetto extract (2579)

Monographs

Alimemazine hemitartrate (2650)

Atomoxetine hydrochloride (2640)

Desloratadine (2570)

Diacerein (2409)

Dutasteride (2641)

Follitropin (2285)

Follitropin concentrated solution (2286)

Human coagulation factor VIIa (rDNA) concentrated solution (2534)

Insulin glargine (2571)

REVISED TEXTS IN THE 8th EDITION

*The texts below have been technically revised since their last publication. They will be implemented on **1 January 2014**.*

GENERAL CHAPTERS

2.2.40. Near-infrared spectroscopy

2.4.25. Ethylene oxide and dioxan

2.6.31. Microbiological examination of herbal medicinal products for oral use and extracts used in their preparation

3.2.9. Rubber closures for containers for aqueous parenteral preparations, for powders and for freeze-dried powders

4. Reagents

5.1.4. Microbiological quality of non-sterile pharmaceutical preparations and substances for pharmaceutical use

5.1.8. Microbiological quality of herbal medicinal products for oral use and extracts used in their preparation

5.8. Pharmacopoeial harmonisation

MONOGRAPHS

General monographs

Radiopharmaceutical preparations (0125)

Dosage forms

Parenteral preparations (0520)

Premixes for medicated feeding stuffs for veterinary use (1037)

Tablets (0478)

Vaccines for veterinary use

Aujeszky's disease vaccine (live) for pigs for parenteral administration (0745)

Rabies vaccine (live, oral) for foxes and raccoon dogs (0746)

Radiopharmaceutical preparations and starting materials for radiopharmaceutical preparations

Fludeoxyglucose (^{18}F) injection (1325)

Herbal drugs and herbal drug preparations

Bistort rhizome (2384)

Capsicum (1859)

Capsicum oleoresin, refined and standardised (2336)

Capsicum soft extract, standardised (2529)

Capsicum tincture, standardised (2337)

Milk thistle dry extract, refined and standardised (2071)

Milk thistle fruit (1860)

Monographs

Aciclovir (0968)

Alfacalcidol (1286)

Brompheniramine maleate (0977)

Cefradine (0814)

Cysteine hydrochloride monohydrate (0895)

Dexamethasone (0388)

Dextranomer (2238)

Dipyridamole (1199)

Doxapram hydrochloride (1201)

Ethylcellulose (0822)

Fenbendazole for veterinary use (1208)

Finasteride (1615)

Flutamide (1423)

Glipizide (0906)

Heparins, low-molecular-mass (0828)

Human plasma for fractionation (0853)

Human α-1-proteinase inhibitor (2387)

Hydrocortisone acetate (0334)

Hypromellose (0348)

Levonorgestrel (0926)

Lomustine (0928)

Maize starch (0344)

Mannitol (0559)

Megestrol acetate (1593)

Metformin hydrochloride (0931)

Methylcellulose (0345)

Methylprednisolone (0561)

Metoprolol succinate (1448)

Metoprolol tartrate (1028)

Minoxidil (0937)

Nicotine ditartrate dihydrate (2599)

Oxfendazole for veterinary use (1458)

Peritoneal dialysis, solutions for (0862)

Phytomenadione (1036)

Potato starch (0355)

Proline (0785)

Serine (0788)

Sulfadiazine (0294)

Threonine (1049)

Timolol maleate (0572)

Valine (0796)

Wheat starch (0359)

CORRECTED TEXTS IN THE 8th EDITION

*The texts below from the 7th Edition have been corrected and specify 'corrected 8.0' above the title. These corrections are to be taken into account from the publication date of the 8th Edition (**15 July 2013**).*

GENERAL CHAPTERS

2.4.1. Ammonium

2.4.3. Calcium

2.4.13. Sulfates

2.5.11. Complexometric titrations

MONOGRAPHS

General chapters

Substances for pharmaceutical use (2034)

Monographs

Alteplase for injection (1170)

Amisulpride (1490)

Carmellose sodium (0472)

Carvedilol (1745)

Dacarbazine (1691)
Fludrocortisone acetate (0767)
Human albumin solution (0255)
Hydroxypropylbetadex (1804)
Kanamycin monosulfate (0032)
Lactulose, liquid (0924)
Mesalazine (1699)
Nitrendipine (1246)
Racecadotril (2171)
all-*rac*-α-Tocopherol (0692)
Urea (0743)

TEXTS WHOSE TITLE HAS CHANGED FOR THE 8th EDITION

The titles of the following texts have been changed in the 8th Edition.

GENERAL CHAPTERS

2.2.40. Near-infrared spectroscopy *(previously Near-infrared spectrophotometry)*

2.6.31. Microbiological examination of herbal medicinal products for oral use and extracts used in their preparation *(previously Microbiological examination of herbal medicinal products for oral use*)

2.8.12. Essential oils in herbal drugs (*previously Determination of essential oils in herbal drugs*)

2.8.14. Tannins in herbal drugs (*previously Determination of tannins in herbal drugs*)

3.1.3. Polyolefins (*previously Polyolefines*)

5.1.8. Microbiological quality of herbal medicinal products for oral use and extracts used in their preparation (*previously Microbiological quality of herbal medicinal products for oral use*)

MONOGRAPHS

Vaccines for veterinary use

Rabies vaccine (live, oral) for foxes and raccoon dogs (0746) (*previously Rabies vaccine (live, oral) for foxes*)

01/2013:10000

1. GENERAL NOTICES

1.1. GENERAL STATEMENTS

The General Notices apply to all monographs and other texts of the European Pharmacopoeia.

The official texts of the European Pharmacopoeia are published in English and French. Translations in other languages may be prepared by the signatory States of the European Pharmacopoeia Convention. In case of doubt or dispute, the English and French versions are alone authoritative.

In the texts of the European Pharmacopoeia, the word 'Pharmacopoeia' without qualification means the European Pharmacopoeia. The official abbreviation Ph. Eur. may be used to indicate the European Pharmacopoeia.

The use of the title or the subtitle of a monograph implies that the article complies with the requirements of the relevant monograph. Such references to monographs in the texts of the Pharmacopoeia are shown using the monograph title and reference number in *italics*.

A preparation must comply throughout its period of validity; a distinct period of validity and/or specifications for opened or broached containers may be decided by the competent authority. The subject of any other monograph must comply throughout its period of use. The period of validity that is assigned to any given article and the time from which that period is to be calculated are decided by the competent authority in light of experimental results of stability studies.

Unless otherwise indicated in the General Notices or in the monographs, statements in monographs constitute mandatory requirements. General chapters become mandatory when referred to in a monograph, unless such reference is made in a way that indicates that it is not the intention to make the text referred to mandatory but rather to cite it for information.

The active substances, excipients, pharmaceutical preparations and other articles described in the monographs are intended for human and veterinary use (unless explicitly restricted to one of these uses). An article is not of Pharmacopoeia quality unless it complies with all the requirements stated in the monograph. This does not imply that performance of all the tests in a monograph is necessarily a prerequisite for a manufacturer in assessing compliance with the Pharmacopoeia before release of a product. The manufacturer may obtain assurance that a product is of Pharmacopoeia quality from data derived, for example, from validation studies of the manufacturing process and from in-process controls. Parametric release in circumstances deemed appropriate by the competent authority is thus not precluded by the need to comply with the Pharmacopoeia.

The tests and assays described are the official methods upon which the standards of the Pharmacopoeia are based. With the agreement of the competent authority, alternative methods of analysis may be used for control purposes, provided that the methods used enable an unequivocal decision to be made as to whether compliance with the standards of the monographs would be achieved if the official methods were used. In the event of doubt or dispute, the methods of analysis of the Pharmacopoeia are alone authoritative.

Certain materials that are the subject of a pharmacopoeial monograph may exist in different grades suitable for different purposes. Unless otherwise indicated in the monograph, the requirements apply to all grades of the material. In some monographs, particularly those on excipients, a list of functionality-related characteristics that are relevant to the use of the substance may be appended to the monograph for information. Test methods for determination of one or more of these characteristics may be given, also for information.

Quality systems. The quality standards represented by monographs are valid only where the articles in question are produced within the framework of a suitable quality system.

General monographs. Substances and preparations that are the subject of an individual monograph are also required to comply with relevant, applicable general monographs. Cross-references to applicable general monographs are not normally given in individual monographs.

General monographs apply to all substances and preparations within the scope of the Definition section of the general monograph, except where a preamble limits the application, for example to substances and preparations that are the subject of a monograph of the Pharmacopoeia.

General monographs on dosage forms apply to all preparations of the type defined. The requirements are not necessarily comprehensive for a given specific preparation and requirements additional to those prescribed in the general monograph may be imposed by the competent authority.

General monographs and individual monographs are complementary. If the provisions of a general monograph do not apply to a particular product, this is expressly stated in the individual monograph.

Validation of pharmacopoeial methods. The test methods given in monographs and general chapters have been validated in accordance with accepted scientific practice and current recommendations on analytical validation. Unless otherwise stated in the monograph or general chapter, validation of the test methods by the analyst is not required.

Implementation of pharmacopoeial methods. When implementing a pharmacopoeial method, the user must assess whether and to what extent the suitability of the method under the actual conditions of use needs to be demonstrated according to relevant monographs, general chapters and quality systems.

Conventional terms. The term 'competent authority' means the national, supranational or international body or organisation vested with the authority for making decisions concerning the issue in question. It may, for example, be a national pharmacopoeia authority, a licensing authority or an official control laboratory.

The expression 'unless otherwise justified and authorised' means that the requirements have to be met, unless the competent authority authorises a modification or an exemption where justified in a particular case.

Statements containing the word 'should' are informative or advisory.

In certain monographs or other texts, the terms 'suitable' and 'appropriate' are used to describe a reagent, micro-organism, test method etc.; if criteria for suitability are not described in the monograph, suitability is demonstrated to the satisfaction of the competent authority.

Medicinal product. (a) Any substance or combination of substances presented as having properties for treating or preventing disease in human beings and/or animals; or (b) any substance or combination of substances that may be used in or administered to human beings and/or animals with a view either to restoring, correcting or modifying physiological functions by exerting a pharmacological, immunological or metabolic action, or to making a medical diagnosis.

Herbal medicinal product. Any medicinal product, exclusively containing as active ingredients one or more herbal drugs or one or more herbal drug preparations, or one or more such herbal drugs in combination with one or more such herbal drug preparations.

Active substance. Any substance intended to be used in the manufacture of a medicinal product and that, when so used, becomes an active ingredient of the medicinal product. Such substances are intended to furnish a pharmacological

activity or other direct effect in the diagnosis, cure, mitigation, treatment or prevention of disease, or to affect the structure and function of the body.

Excipient (auxiliary substance). Any constituent of a medicinal product that is not an active substance. Adjuvants, stabilisers, antimicrobial preservatives, diluents, antioxidants, for example, are excipients.

Interchangeable methods. Certain general chapters contain a statement that the text in question is harmonised with the corresponding text of the Japanese Pharmacopoeia and/or the United States Pharmacopeia and that these texts are interchangeable. This implies that if a substance or preparation is found to comply with a requirement using an interchangeable method from one of these pharmacopoeias it complies with the requirements of the European Pharmacopoeia. In the event of doubt or dispute, the text of the European Pharmacopoeia is alone authoritative.

References to regulatory documents. Monographs and general chapters may contain references to documents issued by regulatory authorities for medicines, for example directives and notes for guidance of the European Union. These references are provided for information for users for the Pharmacopoeia. Inclusion of such a reference does not modify the status of the documents referred to, which may be mandatory or for guidance.

1.2. OTHER PROVISIONS APPLYING TO GENERAL CHAPTERS AND MONOGRAPHS

Quantities. In tests with numerical limits and assays, the quantity stated to be taken for examination is approximate. The amount actually used, which may deviate by not more than 10 per cent from that stated, is accurately weighed or measured and the result is calculated from this exact quantity. In tests where the limit is not numerical, but usually depends upon comparison with the behaviour of a reference substance in the same conditions, the stated quantity is taken for examination. Reagents are used in the prescribed amounts.

Quantities are weighed or measured with an accuracy commensurate with the indicated degree of precision. For weighings, the precision corresponds to plus or minus 5 units after the last figure stated (for example, 0.25 g is to be interpreted as 0.245 g to 0.255 g). For the measurement of volumes, if the figure after the decimal point is a zero or ends in a zero (for example, 10.0 mL or 0.50 mL), the volume is measured using a pipette, a volumetric flask or a burette, as appropriate; otherwise, a graduated measuring cylinder or a graduated pipette may be used. Volumes stated in microlitres are measured using a micropipette or microsyringe.

It is recognised, however, that in certain cases the precision with which quantities are stated does not correspond to the number of significant figures stated in a specified numerical limit. The weighings and measurements are then carried out with a sufficiently improved accuracy.

Apparatus and procedures. Volumetric glassware complies with Class A requirements of the appropriate International Standard issued by the International Organisation for Standardisation.

Unless otherwise prescribed, analytical procedures are carried out at a temperature between 15 °C and 25 °C.

Unless otherwise prescribed, comparative tests are carried out using identical tubes of colourless, transparent, neutral glass with a flat base; the volumes of liquid prescribed are for use with tubes having an internal diameter of 16 mm, but tubes with a larger internal diameter may be used provided the volume of liquid used is adjusted (*2.1.5*). Equal volumes of the liquids to be compared are examined down the vertical axis of the tubes against a white background, or if necessary against a black background. The examination is carried out in diffuse light.

Any solvent required in a test or assay in which an indicator is to be used is previously neutralised to the indicator, unless a blank test is prescribed.

Water-bath. The term 'water-bath' means a bath of boiling water unless water at another temperature is indicated. Other methods of heating may be substituted provided the temperature is near to but not higher than 100 °C or the indicated temperature.

Drying and ignition to constant mass. The terms 'dried to constant mass' and 'ignited to constant mass' mean that 2 consecutive weighings do not differ by more than 0.5 mg, the 2nd weighing following an additional period of drying or of ignition respectively appropriate to the nature and quantity of the residue.

Where drying is prescribed using one of the expressions 'in a desiccator' or '*in vacuo*', it is carried out using the conditions described in chapter *2.2.32. Loss on drying*.

Reagents. The proper conduct of the analytical procedures described in the Pharmacopoeia and the reliability of the results depend, in part, upon the quality of the reagents used. The reagents are described in general chapter *4*. It is assumed that reagents of analytical grade are used; for some reagents, tests to determine suitability are included in the specifications.

Solvents. Where the name of the solvent is not stated, the term 'solution' implies a solution in water.

Where the use of water is specified or implied in the analytical procedures described in the Pharmacopoeia or for the preparation of reagents, water complying with the requirements of the monograph *Purified water (0008)* is used, except that for many purposes the requirements for bacterial endotoxins (*Purified water in bulk*) and microbial contamination (*Purified water in containers)* are not relevant. The term 'distilled water' indicates purified water prepared by distillation.

The term 'ethanol' without qualification means anhydrous ethanol. The term 'alcohol' without qualification means ethanol (96 per cent). Other dilutions of ethanol are indicated by the term 'ethanol' or 'alcohol' followed by a statement of the percentage by volume of ethanol (C_2H_6O) required.

Expression of content. In defining content, the expression 'per cent' is used according to circumstances with one of 2 meanings:

- per cent *m/m* (percentage, mass in mass) expresses the number of grams of substance in 100 g of final product;
- per cent *V/V* (percentage, volume in volume) expresses the number of millilitres of substance in 100 mL of final product.

The expression 'parts per million' (or ppm) refers to mass in mass, unless otherwise specified.

Temperature. Where an analytical procedure describes temperature without a figure, the general terms used have the following meaning:

- in a deep-freeze: below – 15 °C;
- in a refrigerator: 2 °C to 8 °C;
- cold or cool: 8 °C to 15 °C;
- room temperature: 15 °C to 25 °C.

1.3. GENERAL CHAPTERS

Containers. Materials used for containers are described in general chapter *3.1*. General names used for materials, particularly plastic materials, each cover a range of products varying not only in the properties of the principal constituent but also in the additives used. The test methods and limits for materials depend on the formulation and are therefore applicable only for materials whose formulation is covered by

the preamble to the specification. The use of materials with different formulations, and the test methods and limits applied to them, are subject to agreement by the competent authority.

The specifications for containers in general chapter *3.2* have been developed for general application to containers of the stated category, but in view of the wide variety of containers available and possible new developments, the publication of a specification does not exclude the use, in justified circumstances, of containers that comply with other specifications, subject to agreement by the competent authority.

Reference may be made within the monographs of the Pharmacopoeia to the definitions and specifications for containers provided in chapter *3.2. Containers*. The general monographs for pharmaceutical dosage forms may, under the heading Definition/Production, require the use of certain types of container; certain other monographs may, under the heading Storage, indicate the type of container that is recommended for use.

1.4. MONOGRAPHS

TITLES

Monograph titles are in English and French in the respective versions and there is a Latin subtitle.

RELATIVE ATOMIC AND MOLECULAR MASSES

The relative atomic mass (A_r) or the relative molecular mass (M_r) is shown, as and where appropriate, at the beginning of each monograph. The relative atomic and molecular masses and the molecular and graphic formulae do not constitute analytical standards for the substances described.

CHEMICAL ABSTRACTS SERVICE (CAS) REGISTRY NUMBER

CAS registry numbers are included for information in monographs, where applicable, to provide convenient access to useful information for users. CAS Registry Number® is a registered trademark of the American Chemical Society.

DEFINITION

Statements under the heading Definition constitute an official definition of the substance, preparation or other article that is the subject of the monograph.

Limits of content. Where limits of content are prescribed, they are those determined by the method described under Assay.

Herbal drugs. In monographs on herbal drugs, the definition indicates whether the subject of the monograph is, for example, the whole drug or the drug in powdered form. Where a monograph applies to the drug in several states, for example both to the whole drug and the drug in powdered form, the definition states this.

PRODUCTION

Statements under the heading Production draw attention to particular aspects of the manufacturing process but are not necessarily comprehensive. They constitute mandatory requirements for manufacturers, unless otherwise stated. They may relate, for example, to source materials; to the manufacturing process itself and its validation and control; to in-process testing; or to testing that is to be carried out by the manufacturer on the final article, either on selected batches or on each batch prior to release. These statements cannot necessarily be verified on a sample of the final article by an independent analyst. The competent authority may establish that the instructions have been followed, for example, by examination of data received from the manufacturer, by inspection of manufacture or by testing appropriate samples.

The absence of a Production section does not imply that attention to features such as those referred to above is not required.

Choice of vaccine strain, Choice of vaccine composition. The Production section of a monograph may define the characteristics of a vaccine strain or vaccine composition. Unless otherwise stated, test methods given for verification of these characteristics are provided for information as examples of suitable methods. Subject to approval by the competent authority, other test methods may be used without validation against the method shown in the monograph.

POTENTIAL ADULTERATION

Due to the increasing number of fraudulent activities and cases of adulteration, information may be made available to Ph. Eur. users to help detect adulterated materials (i.e. active substances, excipients, intermediate products, bulk products and finished products).

To this purpose, a method for the detection of potential adulterants and relevant limits, together with a reminder that all stages of production and sourcing are subjected to a suitable quality system, may be included in this section of monographs on substances for which an incident has occurred or that present a risk of deliberate contamination. The frequency of testing by manufacturers or by users (e.g. manufacturers of intermediate products, bulk products and finished products, where relevant) depends on a risk assessment, taking into account the level of knowledge of the whole supply chain and national requirements.

This section constitutes requirements for the whole supply chain, from manufacturers to users (e.g. manufacturers of intermediate products, bulk products and finished products, where relevant). The absence of this section does not imply that attention to features such as those referred to above is not required.

CHARACTERS

The statements under the heading Characters are not to be interpreted in a strict sense and are not requirements.

Solubility. In statements of solubility in the Characters section, the terms used have the following significance, referred to a temperature between 15 °C and 25 °C.

Descriptive term	Approximate volume of solvent in millilitres per gram of solute			
Very soluble	less than	1		
Freely soluble	from	1	to	10
Soluble	from	10	to	30
Sparingly soluble	from	30	to	100
Slightly soluble	from	100	to	1000
Very slightly soluble	from	1000	to	10 000
Practically insoluble	more than			10 000

The term 'partly soluble' is used to describe a mixture where only some of the components dissolve. The term 'miscible' is used to describe a liquid that is miscible in all proportions with the stated solvent.

IDENTIFICATION

Scope. The tests given in the Identification section are not designed to give a full confirmation of the chemical structure or composition of the product; they are intended to give confirmation, with an acceptable degree of assurance, that the article conforms to the description on the label.

First and second identifications. Certain monographs have subdivisions entitled 'First identification' and 'Second identification'. The test or tests that constitute the 'First identification' may be used in all circumstances. The test or tests that constitute the 'Second identification' may be used in pharmacies provided it can be demonstrated that the substance or preparation is fully traceable to a batch certified to comply with all the other requirements of the monograph.

Certain monographs give two or more sets of tests for the purpose of the first identification, which are equivalent

and may be used independently. One or more of these sets usually contain a cross-reference to a test prescribed in the Tests section of the monograph. It may be used to simplify the work of the analyst carrying out the identification and the prescribed tests. For example, one identification set cross-refers to a test for enantiomeric purity while the other set gives a test for specific optical rotation: the intended purpose of the two is the same, that is, verification that the correct enantiomer is present.

Powdered herbal drugs. Monographs on herbal drugs may contain schematic drawings of the powdered drug. These drawings complement the description given in the relevant identification test.

TESTS AND ASSAYS

Scope. The requirements are not framed to take account of all possible impurities. It is not to be presumed, for example, that an impurity that is not detectable by means of the prescribed tests is tolerated if common sense and good pharmaceutical practice require that it be absent. See also below under Impurities.

Calculation. Where the result of a test or assay is required to be calculated with reference to the dried or anhydrous substance or on some other specified basis, the determination of loss on drying, water content or other property is carried out by the method prescribed in the relevant test in the monograph. The words 'dried substance' or 'anhydrous substance' etc. appear in parentheses after the result. Where a quantitative determination of a residual solvent is carried out and a test for loss on drying is not carried out, the content of residual solvent is taken into account for the calculation of the assay content of the substance, the specific optical rotation and the specific absorbance. No further indication is given in the specific monograph.

Limits. The limits prescribed are based on data obtained in normal analytical practice; they take account of normal analytical errors, of acceptable variations in manufacture and compounding and of deterioration to an extent considered acceptable. No further tolerances are to be applied to the limits prescribed to determine whether the article being examined complies with the requirements of the monograph.

In determining compliance with a numerical limit, the calculated result of a test or assay is first rounded to the number of significant figures stated, unless otherwise prescribed. The limits, regardless of whether the values are expressed as percentages or as absolute values, are considered significant to the last digit shown (for example 140 indicates 3 significant figures). The last figure of the result is increased by one when the part rejected is equal to or exceeds one half-unit, whereas it is not modified when the part rejected is less than a half-unit.

Indication of permitted limit of impurities. The acceptance criteria for related substances are expressed in monographs either in terms of comparison of peak areas (comparative tests) or as numerical values. For comparative tests, the approximate content of impurity tolerated, or the sum of impurities, may be indicated in brackets for information only. Acceptance or rejection is determined on the basis of compliance or non-compliance with the stated test. If the use of a reference substance for the named impurity is not prescribed, this content may be expressed as a nominal concentration of the substance used to prepare the reference solution specified in the monograph, unless otherwise described.

Herbal drugs. For herbal drugs, the sulfated ash, total ash, water-soluble matter, alcohol-soluble matter, water content, content of essential oil and content of active principle are calculated with reference to the drug that has not been specially dried, unless otherwise prescribed in the monograph.

Equivalents. Where an equivalent is given, for the purposes of the Pharmacopoeia only the figures shown are to be used in applying the requirements of the monograph.

Culture media. The culture media described in monographs and general chapters have been found to be satisfactory for the intended purpose. However, the components of media, particularly those of biological origin, are of variable quality, and it may be necessary for optimal performance to modulate the concentration of some ingredients, notably:

- peptones and meat or yeast extracts, with respect to their nutritive properties;
- buffering substances;
- bile salts, bile extract, deoxycholate, and colouring matter, depending on their selective properties;
- antibiotics, with respect to their activity.

STORAGE

The information and recommendations given under the heading Storage do not constitute a pharmacopoeial requirement but the competent authority may specify particular storage conditions that must be met.

The articles described in the Pharmacopoeia are stored in such a way as to prevent contamination and, as far as possible, deterioration. Where special conditions of storage are recommended, including the type of container (see section 1.3. General chapters) and limits of temperature, they are stated in the monograph.

The following expressions are used in monographs under Storage with the meaning shown.

In an airtight container means that the product is stored in an airtight container (*3.2*). Care is to be taken when the container is opened in a damp atmosphere. A low moisture content may be maintained, if necessary, by the use of a desiccant in the container provided that direct contact with the product is avoided.

Protected from light means that the product is stored either in a container made of a material that absorbs actinic light sufficiently to protect the contents from change induced by such light, or in a container enclosed in an outer cover that provides such protection, or is stored in a place from which all such light is excluded.

LABELLING

In general, labelling of medicines is subject to supranational and national regulation and to international agreements. The statements under the heading Labelling are not therefore comprehensive and, moreover, for the purposes of the Pharmacopoeia only those statements that are necessary to demonstrate compliance or non-compliance with the monograph are mandatory. Any other labelling statements are included as recommendations. When the term 'label' is used in the Pharmacopoeia, the labelling statements may appear on the container, the package, a leaflet accompanying the package, or a certificate of analysis accompanying the article, as decided by the competent authority.

WARNINGS

Materials described in monographs and reagents specified for use in the Pharmacopoeia may be injurious to health unless adequate precautions are taken. The principles of good quality control laboratory practice and the provisions of any appropriate regulations are to be observed at all times. Attention is drawn to particular hazards in certain monographs by means of a warning statement; absence of such a statement is not to be taken to mean that no hazard exists.

IMPURITIES

A list of all known and potential impurities that have been shown to be detected by the tests in a monograph may be given. See also chapter *5.10. Control of impurities in substances for pharmaceutical use*. The impurities are designated by a letter or letters of the alphabet. Where a letter appears to be missing, the impurity designated by this letter has been deleted from the list during monograph development prior to publication or during monograph revision.

FUNCTIONALITY-RELATED CHARACTERISTICS OF EXCIPIENTS

Monographs on excipients may have a section on functionality-related characteristics. The characteristics, any test methods for determination and any tolerances are not mandatory requirements; they may nevertheless be relevant for use of the excipient and are given for information (see also section 1.1. General statements).

REFERENCE STANDARDS

Certain monographs require the use of reference standards (chemical reference substances, herbal reference standards, biological reference preparations, reference spectra). See also chapter *5.12. Reference standards.* The European Pharmacopoeia Commission establishes the official reference standards, which are alone authoritative in case of arbitration. These reference standards are available from the European Directorate for the Quality of Medicines & HealthCare (EDQM). Information on the available reference standards and a batch validity statement can be obtained via the EDQM website.

1.5. ABBREVIATIONS AND SYMBOLS

A	Absorbance
$A_{1\ \mathrm{cm}}^{1\ \mathrm{per\ cent}}$	Specific absorbance
A_r	Relative atomic mass
$[\alpha]_D^{20}$	Specific optical rotation
bp	Boiling point
BRP	Biological reference preparation
CRS	Chemical reference substance
d_{20}^{20}	Relative density
λ	Wavelength
HRS	Herbal reference standard
IU	International Unit
M	Molarity
M_r	Relative molecular mass
mp	Melting point
n_D^{20}	Refractive index
Ph. Eur. U.	European Pharmacopoeia Unit
ppb	Parts per billion (micrograms per kilogram)
ppm	Parts per million (milligrams per kilogram)
R	Substance or solution defined under *4. Reagents*
R_F	Retardation factor (see chapter *2.2.46*)
R_{st}	Used in chromatography to indicate the ratio of the distance travelled by a substance to the distance travelled by a reference substance
RV	Substance used as a primary standard in volumetric analysis (chapter *4.2.1*)

Abbreviations used in the monographs on immunoglobulins, immunosera and vaccines

LD_{50}	The statistically determined quantity of a substance that, when administered by the specified route, may be expected to cause the death of 50 per cent of the test animals within a given period
MLD	Minimum lethal dose
L+/10 dose	The smallest quantity of a toxin that, in the conditions of the test, when mixed with 0.1 IU of antitoxin and administered by the specified route, causes the death of the test animals within a given period
L+ dose	The smallest quantity of a toxin that, in the conditions of the test, when mixed with 1 IU of antitoxin and administered by the specified route, causes the death of the test animals within a given period
lr/100 dose	The smallest quantity of a toxin that, in the conditions of the test, when mixed with 0.01 IU of antitoxin and injected intracutaneously causes a characteristic reaction at the site of injection within a given period
Lp/10 dose	The smallest quantity of toxin that, in the conditions of the test, when mixed with 0.1 IU of antitoxin and administered by the specified route, causes paralysis in the test animals within a given period
Lo/10 dose	The largest quantity of a toxin that, in the conditions of the test, when mixed with 0.1 IU of antitoxin and administered by the specified route, does not cause symptoms of toxicity in the test animals within a given period
Lf dose	The quantity of toxin or toxoid that flocculates in the shortest time with 1 IU of antitoxin
$CCID_{50}$	The statistically determined quantity of virus that may be expected to infect 50 per cent of the cell cultures to which it is added
EID_{50}	The statistically determined quantity of virus that may be expected to infect 50 per cent of the fertilised eggs into which it is inoculated
ID_{50}	The statistically determined quantity of a virus that may be expected to infect 50 per cent of the animals into which it is inoculated
PD_{50}	The statistically determined dose of a vaccine that, in the conditions of the test, may be expected to protect 50 per cent of the animals against a challenge dose of the micro-organisms or toxins against which it is active
ED_{50}	The statistically determined dose of a vaccine that, in the conditions of the test, may be expected to induce specific antibodies in 50 per cent of the animals for the relevant vaccine antigens
PFU	Pock-forming units or plaque-forming units
SPF	Specified-pathogen-free

Collections of micro-organisms

ATCC	American Type Culture Collection 10801 University Boulevard Manassas, Virginia 20110-2209, USA
C.I.P.	Collection de Bactéries de l'Institut Pasteur B.P. 52, 25 rue du Docteur Roux 75724 Paris Cedex 15, France
IMI	International Mycological Institute Bakeham Lane Surrey TW20 9TY, Great Britain

I.P.	Collection Nationale de Culture de Microorganismes (C.N.C.M.) Institut Pasteur 25, rue du Docteur Roux 75724 Paris Cedex 15, France
NCIMB	National Collection of Industrial and Marine Bacteria Ltd 23 St Machar Drive Aberdeen AB2 1RY, Great Britain
NCPF	National Collection of Pathogenic Fungi London School of Hygiene and Tropical Medicine Keppel Street London WC1E 7HT, Great Britain
NCTC	National Collection of Type Cultures Central Public Health Laboratory Colindale Avenue London NW9 5HT, Great Britain
NCYC	National Collection of Yeast Cultures AFRC Food Research Institute Colney Lane Norwich NR4 7UA, Great Britain
NITE	Biological Resource Center Department of Biotechnology National Institute of Technology and Evaluation 2-5-8 Kazusakamatari, Kisarazu-shi, Chiba, 292-0818 Japan
S.S.I.	Statens Serum Institut 80 Amager Boulevard, Copenhagen, Denmark

1.6. UNITS OF THE INTERNATIONAL SYSTEM (SI) USED IN THE PHARMACOPOEIA AND EQUIVALENCE WITH OTHER UNITS

INTERNATIONAL SYSTEM OF UNITS (SI)

The International System of Units comprises 3 classes of units, namely base units, derived units and supplementary units[(1)]. The base units and their definitions are set out in Table 1.6-1.

The derived units may be formed by combining the base units according to the algebraic relationships linking the corresponding quantities. Some of these derived units have special names and symbols. The SI units used in the Pharmacopoeia are shown in Table 1.6-2.

Some important and widely used units outside the International System are shown in Table 1.6-3.

The prefixes shown in Table 1.6-4 are used to form the names and symbols of the decimal multiples and submultiples of SI units.

NOTES

1. In the Pharmacopoeia, the Celsius temperature is used (symbol *t*). This is defined by the following equation:

$$t = T - T_0$$

   where T_0 = 273.15 K by definition. The Celsius or centigrade temperature is expressed in degrees Celsius (symbol °C). The unit 'degree Celsius' is equal to the unit 'kelvin'.
2. The practical expressions of concentrations used in the Pharmacopoeia are defined in the General Notices.
3. The radian is the plane angle between two radii of a circle that cut off on the circumference an arc equal in length to the radius.
4. In the Pharmacopoeia, conditions of centrifugation are defined by reference to the acceleration due to gravity (*g*):

$$g = 9.806\,65\ m{\cdot}s^{-2}$$

5. Certain quantities without dimensions are used in the Pharmacopoeia: relative density (*2.2.5*), absorbance (*2.2.25*), specific absorbance (*2.2.25*) and refractive index (*2.2.6*).
6. The microkatal is defined as the enzymic activity that, under defined conditions, produces the transformation (e.g. hydrolysis) of 1 micromole of the substrate per second.

Table 1.6.-1. – *SI base units*

Quantity		Unit		Definition
Name	Symbol	Name	Symbol	
Length	*l*	metre	m	The metre is the length of the path travelled by light in a vacuum during a time interval of 1/299 792 458 of a second.
Mass	*m*	kilogram	kg	The kilogram is equal to the mass of the international prototype of the kilogram.
Time	*t*	second	s	The second is the duration of 9 192 631 770 periods of the radiation corresponding to the transition between the two hyperfine levels of the ground state of the caesium-133 atom.
Electric current	*I*	ampere	A	The ampere is that constant current which, maintained in two straight parallel conductors of infinite length, of negligible circular cross-section and placed 1 metre apart in vacuum would produce between these conductors a force equal to 2×10^{-7} newton per metre of length.
Thermodynamic temperature	*T*	kelvin	K	The kelvin is the fraction 1/273.16 of the thermodynamic temperature of the triple point of water.
Amount of substance	*n*	mole	mol	The mole is the amount of substance of a system containing as many elementary entities as there are atoms in 0.012 kilogram of carbon-12*.
Luminous intensity	I_v	candela	cd	The candela is the luminous intensity in a given direction of a source emitting monochromatic radiation with a frequency of 540×10^{12} hertz and whose energy intensity in that direction is 1/683 watt per steradian.

* When the mole is used, the elementary entities must be specified and may be atoms, molecules, ions, electrons, other particles or specified groups of such particles.

(1) The definitions of the units used in the International System are given in the booklet 'Le Système International d'Unités (SI)', published by the Bureau International des Poids et Mesures, Pavillon de Breteuil, F-92310 Sèvres.

Table 1.6.-2. – *SI units used in the European Pharmacopoeia and equivalence with other units*

Quantity		Unit				Conversion of other units into SI units
Name	**Symbol**	**Name**	**Symbol**	**Expression in SI base units**	**Expression in other SI units**	
Wave number	ν	one per metre	1/m	m^{-1}		
Wavelength	λ	micrometre nanometre	µm nm	10^{-6}m 10^{-9}m		
Area	A, S	square metre	m^2	m^2		
Volume	V	cubic metre	m^3	m^3		1 mL = 1 cm^3 = 10^{-6} m^3
Frequency	ν	hertz	Hz	s^{-1}		
Density	ρ	kilogram per cubic metre	kg/m^3	$kg{\cdot}m^{-3}$		1 g/mL = 1 g/cm^3 = 10^3 $kg{\cdot}m^{-3}$
Velocity	v	metre per second	m/s	$m{\cdot}s^{-1}$		
Force	F	newton	N	$m{\cdot}kg{\cdot}s^{-2}$		1 dyne = 1 $g{\cdot}cm{\cdot}s^{-2}$ = 10^{-5} N 1 kp = 9.806 65 N
Pressure	p	pascal	Pa	$m^{-1}{\cdot}kg{\cdot}s^{-2}$	$N{\cdot}m^{-2}$	1 dyne/cm^2 = 10^{-1} Pa = 10^{-1} $N{\cdot}m^{-2}$ 1 atm = 101 325 Pa = 101.325 kPa 1 bar = 10^5 Pa = 0.1 MPa 1 mm Hg = 133.322 387 Pa 1 Torr = 133.322 368 Pa 1 psi = 6.894 757 kPa
Dynamic viscosity	η	pascal second	Pa·s	$m^{-1}{\cdot}kg{\cdot}s^{-1}$	$N{\cdot}s{\cdot}m^{-2}$	1 P = 10^{-1} Pa·s = 10^{-1} $N{\cdot}s{\cdot}m^{-2}$ 1 cP = 1 mPa·s
Kinematic viscosity	ν	square metre per second	m^2/s	$m^2{\cdot}s^{-1}$	$Pa{\cdot}s{\cdot}m^3{\cdot}kg^{-1}$ $N{\cdot}m{\cdot}s{\cdot}kg^{-1}$	1 St = 1 $cm^2{\cdot}s^{-1}$ = 10^{-4} $m^2{\cdot}s^{-1}$
Energy	W	joule	J	$m^2{\cdot}kg{\cdot}s^{-2}$	N·m	1 erg = 1 $cm^2{\cdot}g{\cdot}s^{-2}$ = 1 dyne·cm = 10^{-7} J 1 cal = 4.1868 J
Power Radiant flux	P	watt	W	$m^2{\cdot}kg{\cdot}s^{-3}$	$N{\cdot}m{\cdot}s^{-1}$ $J{\cdot}s^{-1}$	1 erg/s = 1 $dyne{\cdot}cm{\cdot}s^{-1}$ = 10^{-7} W = 10^{-7} $N{\cdot}m{\cdot}s^{-1}$ = 10^{-7} $J{\cdot}s^{-1}$
Absorbed dose (of radiant energy)	D	gray	Gy	$m^2{\cdot}s^{-2}$	$J{\cdot}kg^{-1}$	1 rad = 10^{-2} Gy
Electric potential, electromotive force	U	volt	V	$m^2{\cdot}\ kg{\cdot}s^{-3}{\cdot}A^{-1}$	$W{\cdot}A^{-1}$	
Electric resistance	R	ohm	Ω	$m^2{\cdot}\ kg{\cdot}s^{-3}{\cdot}A^{-2}$	$V{\cdot}A^{-1}$	
Quantity of electricity	Q	coulomb	C	A·s		
Activity of a radionuclide	A	becquerel	Bq	s^{-1}		1 Ci = $37{\cdot}10^9$ Bq = $37{\cdot}10^9$ s^{-1}
Concentration (of amount of substance), molar concentration	c	mole per cubic metre	mol/m^3	$mol{\cdot}m^{-3}$		1 mol/L = 1 M = 1 mol/dm^3 = 10^3 $mol{\cdot}m^{-3}$
Mass concentration	ρ	kilogram per cubic metre	kg/m^3	$kg{\cdot}m^{-3}$		1 g/L = 1 g/dm^3 = 1 $kg{\cdot}m^{-3}$

Table 1.6.-3. – *Units used with the International System*

Quantity	Unit		Value in SI units
	Name	**Symbol**	
Time	minute	min	1 min = 60 s
	hour	h	1 h = 60 min = 3600 s
	day	d	1 d = 24 h = 86 400 s
Plane angle	degree	°	1° = (π/180) rad
Volume	litre	L	1 L = 1 dm^3 = 10^{-3} m^3
Mass	tonne	t	1 t = 10^3 kg
Rotational frequency	revolution per minute	r/min	1 r/min = (1/60) s^{-1}

Table 1.6.-4. – *Decimal multiples and sub-multiples of units*

Factor	Prefix	Symbol	Factor	Prefix	Symbol
10^{18}	exa	E	10^{-1}	deci	d
10^{15}	peta	P	10^{-2}	centi	c
10^{12}	tera	T	10^{-3}	milli	m
10^{9}	giga	G	10^{-6}	micro	µ
10^{6}	mega	M	10^{-9}	nano	n
10^{3}	kilo	k	10^{-12}	pico	p
10^{2}	hecto	h	10^{-15}	femto	f
10^{1}	deca	da	10^{-18}	atto	a

2.1. APPARATUS

01/2008:20101

2.1.1. DROPPERS

The term 'drops' means standard drops delivered from a standard dropper as described below.

Standard droppers (Figure 2.1.1-1) are constructed of practically colourless glass. The lower extremity has a circular orifice in a flat surface at right angles to the axis.

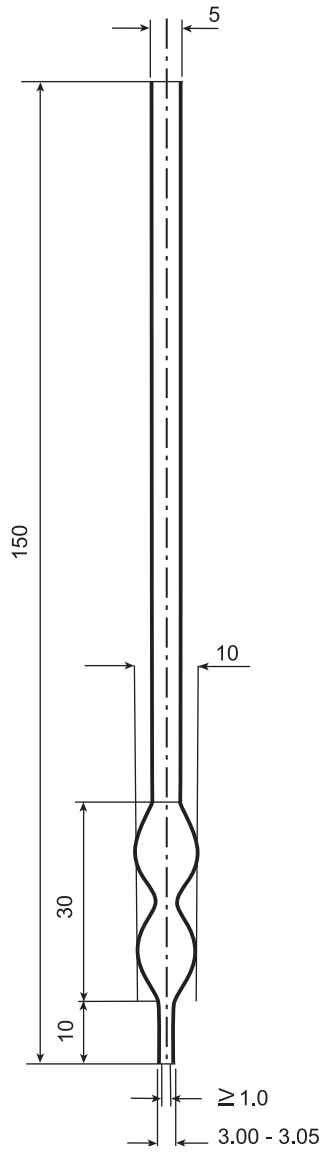

Figure 2.1.1.-1. – *Standard dropper*

Dimensions in millimetres

Other droppers may be used provided they comply with the following test.

20 drops of *water R* at 20 ± 1 °C flowing freely from the dropper held in the vertical position at a constant rate of 1 drop per second weighs 1000 ± 50 mg.

The dropper must be carefully cleaned before use. Carry out 3 determinations on any given dropper. No result may deviate by more than 5 per cent from the mean of the 3 determinations.

01/2008:20102

2.1.2. COMPARATIVE TABLE OF POROSITY OF SINTERED-GLASS FILTERS(1)

Table 2.1.2.-1

Porosity number (Ph. Eur.)(2)	Maximum diameter of pores in micrometres	Germany	France	United Kingdom
1.6	less than 1.6	5f	–	–
–	1 - 2.5	5	–	5
4	1.6 - 4	–	–	–
–	4 - 6	–	5	–
10	4 - 10	4f	–	4
16	10 - 16	4	4	–
40	16 - 40	3	3	3
–	40 - 50	–	–	2
100	40 - 100	2	2	–
–	100 - 120	–	–	1
160	100 - 160	1	1	–
–	150 - 200	0	0	–
250	160 - 250	–	–	–
–	200 - 500	–	00	–

Special Uses

Diameters in micrometres

< 2.5	Bacteriological filtration
4 - 10	Ultra-fine filtration, separation of micro-organisms of large diameter
10 - 40	Analytical filtration, very fine filtration of mercury, very fine dispersion of gases
40 - 100	Fine filtration, filtration of mercury, fine dispersion of gases
100 - 160	Filtration of coarse materials, dispersion and washing of gases, support for other filter materials
160 - 500	Filtration of very coarse materials, dispersion and washing of gases.

01/2008:20103

2.1.3. ULTRAVIOLET RAY LAMPS FOR ANALYTICAL PURPOSES

Mercury vapour in quartz lamps is used as the source of ultraviolet light. A suitable filter may be fitted to eliminate the visible part of the spectrum emitted by the lamp. When the Pharmacopoeia prescribes in a test the use of ultraviolet light of wavelength 254 nm or 365 nm, an instrument consisting of a mercury vapour lamp and a filter which gives an emission band with maximum intensity at about 254 nm or 365 nm is used. The lamp used should be capable of revealing without doubt a standard spot of sodium salicylate with a diameter of about 5 mm on a support of *silica gel G R*, the spot being examined while in a position normal to the radiation.

For this purpose apply 5 µL of a 0.4 g/L solution of *sodium salicylate R* in *alcohol R*(3) for lamps of maximum output at 254 nm and 5 µL of a 2 g/L solution in *alcohol R*(3) for lamps of maximum output at 365 nm. The distance between the lamp and the chromatographic plate under examination used in a pharmacopoeial test should never exceed the distance used to carry out the above test.

(1) The given limits are only approximate.
(2) The European Pharmacopoeia has adopted the system proposed by the International Organization for Standardization (ISO).
(3) The *alcohol R* used must be free from fluorescence.

01/2008:20104

2.1.4. SIEVES

Sieves are constructed of suitable materials with square meshes. For purposes other than analytical procedures, sieves with circular meshes may be used, the internal diameters of which are 1.25 times the aperture of the square mesh of the corresponding sieve size. There must be no reaction between the material of the sieve and the substance being sifted. Degree of comminution is prescribed in the monograph using the sieve number, which is the size of the mesh in micrometres, given in parenthesis after the name of the substance (Table 2.1.4.-1).

Maximum tolerance[4] for an aperture (+ *X*): no aperture size shall exceed the nominal size by more than *X*, where:

$$X = \frac{2\left(w^{0.75}\right)}{3} + 4\left(w^{0.25}\right)$$

w = width of aperture.

Tolerance for mean aperture (± *Y*): the average aperture size shall not depart from the nominal size by more than ± *Y*, where:

$$Y = \frac{w^{0.98}}{27} + 1.6$$

Intermediary tolerance (+ *Z*): not more than 6 per cent of the total number of apertures shall have sizes between "nominal + *X*" and "nominal + *Z*", where:

$$Z = \frac{X + Y}{2}$$

Wire diameter *d*: the wire diameters given in Table 2.1.4.-1 apply to woven metal wire cloth mounted in a frame. The nominal sizes of the wire diameters may depart from these values within the limits d_{max} and d_{min}. The limits define a permissible range of choice ± 15 per cent of the recommended nominal dimensions. The wires in a test sieve shall be of a similar diameter in warp and weft directions.

Table 2.1.4.-1 (*values in micrometers*)

Sieve numbers (Nominal dimensions of apertures)	Tolerances for apertures			Wire diameters		
	Maximum tolerance for an aperture	Tolerance for mean aperture	Intermediary tolerance	Recommended nominal dimensions	Admissible limits	
	+ *X*	± *Y*	+ *Z*	*d*	d_{max}	d_{min}
11 200	770	350	560	2500	2900	2100
8000	600	250	430	2000	2300	1700
5600	470	180	320	1600	1900	1300
4000	370	130	250	1400	1700	1200
2800	290	90	190	1120	1300	950
2000	230	70	150	900	1040	770
1400	180	50	110	710	820	600
1000	140	30	90	560	640	480
710	112	25	69	450	520	380
500	89	18	54	315	360	270
355	72	13	43	224	260	190
250	58	9.9	34	160	190	130
180	47	7.6	27	125	150	106
125	38	5.8	22	90	104	77
90	32	4.6	18	63	72	54
63	26	3.7	15	45	52	38
45	22	3.1	13	32	37	27
38	–	–	–	30	35	24

(4) See the International Standard ISO 3310/1 (1975).

01/2008:20105

2.1.5. TUBES FOR COMPARATIVE TESTS

Tubes used for comparative tests are matched tubes of colourless glass with a uniform internal diameter. The base is transparent and flat.

A column of the liquid is examined down the vertical axis of the tube against a white background, or if necessary, against a black background. The examination is carried out in diffused light.

It is assumed that tubes with an internal diameter of 16 mm will be used. Tubes with a larger internal diameter may be used instead but the volume of liquid examined must then be increased so that the depth of liquid in the tubes is not less than where the prescribed volume of liquid and tubes 16 mm in internal diameter are used.

01/2008:20106

2.1.6. GAS DETECTOR TUBES

Gas detector tubes are cylindrical, sealed tubes consisting of an inert transparent material and are constructed to allow the passage of gas. They contain reagents adsorbed onto inert substrates that are suitable for the visualisation of the substance to be detected and, if necessary, they also contain preliminary layers and/or adsorbent filters to eliminate substances that interfere with the substance to be detected. The layer of indicator contains either a single reagent for the detection of a given impurity or several reagents for the detection of several substances (monolayer tube or multilayer tube).

The test is carried out by passing the required volume of the gas to be examined through the indicator tube. The length of the coloured layer or the intensity of a colour change on a graduated scale gives an indication of the impurities present.

The calibration of the detector tubes is verified according to the manufacturer's instructions.

Operating conditions. Examine according to the manufacturer's instructions or proceed as follows:

The gas supply is connected to a suitable pressure regulator and needle valve. Connect the flexible tubing fitted with a Y-piece to the valve and adjust the flow of gas to be examined to purge the tubing in order to obtain an appropriate flow (Figure 2.1.6.-1). Prepare the indicator tube and fit to the metering pump, following the manufacturer's instructions. Connect the open end of the indicator tube to the short leg of the tubing and operate the pump by the appropriate number of strokes to pass a suitable volume of gas to be examined through the tube. Read the value corresponding to the length of the coloured layer or the intensity of the colour on the graduated scale. If a negative result is achieved, indicator tubes can be verified with a calibration gas containing the appropriate impurity.

In view of the wide variety of available compressor oils, it is necessary to verify the reactivity of the oil detector tubes for the oil used. Information on the reactivity for various oils is given in the leaflet supplied with the tube. If the oil used is not cited in the leaflet, the tube manufacturer must verify the reactivity and if necessary provide a tube specific for this oil.

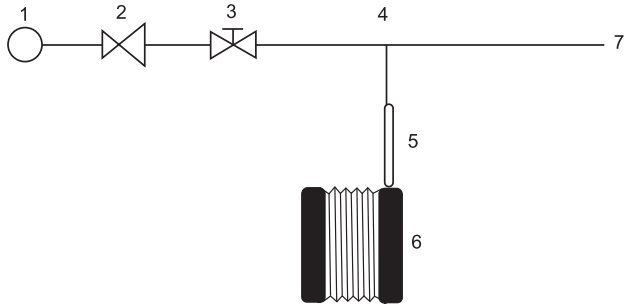

1. Gas supply
2. Pressure regulator
3. Needle valve
4. "Y"-piece
5. Indicator tube
6. Indicator tube pump
7. End open to atmosphere

Figure 2.1.6.-1. – *Apparatus for gas detector tubes*

Carbon dioxide detector tube. Sealed glass tube containing adsorbent filters and suitable supports for hydrazine and crystal violet indicators. The minimum value indicated is 100 ppm with a relative standard deviation of at most ± 15 per cent.

Sulfur dioxide detector tube. Sealed glass tube containing adsorbent filters and suitable supports for the iodine and starch indicator. The minimum value indicated is 0.5 ppm with a relative standard deviation of at most ± 15 per cent.

Oil detector tube. Sealed glass tube containing adsorbent filters and suitable supports for the sulfuric acid indicator. The minimum value indicated is 0.1 mg/m^3 with a relative standard deviation of at most ± 30 per cent.

Nitrogen monoxide and nitrogen dioxide detector tube. Sealed glass tube containing adsorbent filters and suitable supports for an oxidising layer (Cr(VI) salt) and the diphenylbenzidine indicator. The minimum value indicated is 0.5 ppm with a relative standard deviation of at most ± 15 per cent.

Carbon monoxide detector tube. Sealed glass tube containing adsorbent filters and suitable supports for di-iodine pentoxide, selenium dioxide and fuming sulfuric acid indicators. The minimum value indicated is 5 ppm or less, with a relative standard deviation of at most ± 15 per cent.

Hydrogen sulfide detector tube. Sealed glass tube containing adsorbent filters and suitable supports for an appropriate lead salt indicator. The minimum value indicated is 1 ppm or less, with a relative standard deviation of at most ± 10 per cent.

Water vapour detector tube. Sealed glass tube containing adsorbent filters and suitable supports for the magnesium perchlorate indicator. The minimum value indicated is 67 ppm or less, with a relative standard deviation of at most ± 20 per cent.

2.2. PHYSICAL AND PHYSICOCHEMICAL METHODS

01/2008:20201

2.2.1. CLARITY AND DEGREE OF OPALESCENCE OF LIQUIDS

VISUAL METHOD

Using identical test-tubes of colourless, transparent, neutral glass with a flat base and an internal diameter of 15-25 mm, compare the liquid to be examined with a reference suspension freshly prepared as described below, the depth of the layer being 40 mm. Compare the solutions in diffused daylight 5 min after preparation of the reference suspension, viewing vertically against a black background. The diffusion of light must be such that reference suspension I can readily be distinguished from *water R*, and that reference suspension II can readily be distinguished from reference suspension I.

A liquid is considered *clear* if its clarity is the same as that of *water R* or of the solvent used when examined under the conditions described above, or if its opalescence is not more pronounced than that of reference suspension I.

Hydrazine sulfate solution. Dissolve 1.0 g of *hydrazine sulfate R* in *water R* and dilute to 100.0 mL with the same solvent. Allow to stand for 4-6 h.

Hexamethylenetetramine solution. In a 100 mL ground-glass-stoppered flask, dissolve 2.5 g of *hexamethylenetetramine R* in 25.0 mL of *water R*.

Primary opalescent suspension (formazin suspension). To the hexamethylenetetramine solution in the flask add 25.0 mL of the hydrazine sulfate solution. Mix and allow to stand for 24 h. This suspension is stable for 2 months, provided it is stored in a glass container free from surface defects. The suspension must not adhere to the glass and must be well mixed before use.

Standard of opalescence. Dilute 15.0 mL of the primary opalescent suspension to 1000.0 mL with *water R*. This suspension is freshly prepared and may be stored for up to 24 h.

Reference suspensions. Prepare the reference suspensions according to Table 2.2.1.-1. Mix and shake before use.

Table 2.2.1.-1

	I	II	III	IV
Standard of opalescence	5.0 mL	10.0 mL	30.0 mL	50.0 mL
Water R	95.0 mL	90.0 mL	70.0 mL	50.0 mL

Turbidity standard. The formazin suspension prepared by mixing equal volumes of the hydrazine sulfate solution and the hexamethylenetetramine solution is defined as a 4000 NTU (nephelometric turbidity units) primary reference standard. Reference suspensions I, II, III and IV have values of 3 NTU, 6 NTU, 18 NTU and 30 NTU respectively. Stabilised formazin suspensions that can be used to prepare stable, diluted turbidity standards are available commercially and may be used after comparison with the standards prepared as described.

Formazin has several desirable characteristics that make it an excellent turbidity standard. It can be reproducibly prepared from assayed raw materials. The physical characteristics make it a desirable light-scatter calibration standard. The formazin polymer consists of chains of different lengths, which fold into random configurations. This results in a wide assay of particle shapes and sizes, which analytically fits the possibility of different particle sizes and shapes that are found in the real samples. Due to formazin's reproducibility, scattering characteristics and traceability, instrument calibration algorithms and performance criteria are mostly based on this standard.

INSTRUMENTAL METHODS

INTRODUCTION

The degree of opalescence may also be determined by instrumental measurement of the light absorbed or scattered on account of submicroscopic optical density inhomogeneities of opalescent solutions and suspensions. 2 such techniques are nephelometry and turbidimetry. For turbidity measurement of coloured samples, ratio turbidimetry and nephelometry with ratio selection are used.

The light scattering effect of suspended particles can be measured by observation of either the transmitted light (turbidimetry) or the scattered light (nephelometry). Ratio turbidimetry combines the principles of both nephelometry and turbidimetry. Turbidimetry and nephelometry are useful for the measurement of slightly opalescent suspensions. Reference suspensions produced under well-defined conditions must be used. For quantitative measurements, the construction of calibration curves is essential, since the relationship between the optical properties of the suspension and the concentration of the dispersed phase is at best semi-empirical.

The determination of opalescence of coloured liquids is done with ratio turbidimeters or nephelometers with ratio selection, since colour provides a negative interference, attenuating both incident and scattered light and lowering the turbidity value. The effect is so great for even moderately coloured samples that conventional nephelometers cannot be used.

The instrumental assessment of clarity and opalescence provides a more discriminatory test that does not depend on the visual acuity of the analyst. Numerical results are more useful for quality monitoring and process control, especially in stability studies. For example, previous numerical data on stability can be projected to determine whether a given batch of dosage formulation or active pharmaceutical ingredient will exceed shelf-life limits prior to the expiry date.

NEPHELOMETRY

When a suspension is viewed at right angles to the direction of the incident light, the system appears opalescent due to the reflection of light from the particles of the suspension (Tyndall effect). A certain portion of the light beam entering a turbid liquid is transmitted, another portion is absorbed and the remaining portion is scattered by the suspended particles. If measurement is made at 90° to the light beam, the light scattered by the suspended particles can be used for the determination of their concentration, provided the number and size of particles influencing the scattering remain constant. The reference suspension must maintain a constant degree of turbidity and the sample and reference suspensions must be prepared under identical conditions. The Tyndall effect depends upon both the number of particles and their size. Nephelometric measurements are more reliable in low turbidity ranges, where there is a linear relationship between nephelometric turbidity unit (NTU) values and relative detector signals. As the degree of turbidity increases, not all the particles are exposed to the incident light and the scattered radiation of other particles is hindered on its way to the detector. The maximum nephelometric values at which reliable measurements can be made lie in the range of 1750-2000 NTU. Linearity must be demonstrated by constructing a calibration curve using at least 4 concentrations.

TURBIDIMETRY

The optical property expressed as turbidity is the interaction between light and suspended particles in liquid. This is an expression of the optical property that causes light to be scattered and absorbed rather than transmitted in a straight line through the sample. The quantity of solid material in suspension can be determined by the measurement of the

transmitted light. A linear relationship between turbidity and concentration is obtained when the particle sizes are uniform and homogeneous in the suspension. This is true only in very dilute suspensions containing small particles. Linearity between turbidity and concentration must be established by constructing a calibration curve using at least 4 concentrations.

RATIO TURBIDIMETRY

In ratio turbidimetry the relationship of the transmission measurement to the 90° scattered light measurement is determined. This procedure compensates for the light that is diminished by the colour of the sample. The influence of the colour of the sample may also be eliminated by using an infrared light-emitting diode (IR LED) at 860 nm as the light source of the instrument. The instrument's photodiode detectors receive and measure scattered light at a 90° angle from the sample as well as measuring the forward scatter (light reflected) in front of the sample along with the measurement of light transmitted directly through the sample. The measuring results are given in NTU(ratio) and are obtained by calculating the ratio of the 90° angle scattered light measured to the sum of the components of forward scattered and transmitted light values. In ratio turbidimetry the influence of stray light becomes negligible. Nephelometers are used for measurements of the degree of opalescence of colourless liquids.

Measurements of reference suspensions I-IV with a ratio turbidimeter show a linear relationship between the concentrations and measured NTU values (see Table 2.2.1.-2). Reference suspensions I-IV (Ph. Eur.) may be used as calibrators for the instrument.

Table 2.2.1.-2

Formazin suspensions	Opalescent values (NTU)
Reference suspension I	3
Reference suspension II	6
Reference suspension III	18
Reference suspension IV	30
Standard of opalescence	60
Primary opalescent suspension	4000

INSTRUMENTAL DETERMINATION OF OPALESCENCE

Requirements in monographs are expressed in terms of the visual examination method with the defined reference suspensions. Instrumental methods may also be used for determining compliance with monograph requirements once the suitability of the instrument as described below has been established and calibration with reference suspensions I-IV and with *water R* or the solvent used has been performed.

Apparatus. Ratio turbidimeters or nephelometers with selectable ratio application use as light source a tungsten lamp with spectral sensitivity at about 550 nm operating at a filament colour temperature of 2700 K, or IR LED having an emission maximum at 860 nm with a 60 nm spectral bandwidth. Other suitable light sources may also be used. Silicon photodiodes and photomultipliers are commonly used as detectors and record changes in light scattered or transmitted by the sample. The light scattered at 90 ± 2.5° is detected by the primary detector. Other detectors are those to detect back and forward scatter as well as transmitted light. The instruments used are calibrated against standards of known turbidity and are capable of automatic determination of turbidity. The test results expressed in NTU units are obtained directly from the instrument and compared to the specifications in the individual monographs.

Instruments complying with the following specifications are suitable.

- *Measuring units*: NTU. NTU is based on the turbidity of a primary reference standard of formazin. FTU (Formazin Turbidity Units) or FNU (Formazin Nephelometry Units) are also used, and are equivalent to NTU in low regions (up to 40 NTU). These units are used in all 3 instrumental methods (nephelometry, turbidimetry and ratio turbidimetry).
- *Measuring range*: 0.01-1100 NTU.
- *Resolution*: 0.01 NTU within the range of 0-10 NTU, 0.1 NTU within the range of 10-100 NTU, and 1 NTU for the range > 100 NTU. The instrument is calibrated and controlled with reference standards of formazin.
- *Accuracy*: 0-10 NTU: ± (2 per cent of reading + 0.01) NTU. 10-1000 NTU: ± 5 per cent.
- *Repeatability*: 0-10 NTU: ± 0.01 NTU. 10-1000 NTU: ± 2 per cent of the measured value.
- *Calibration*: with 4 reference suspensions of formazin in the range of interest. Reference suspensions described in this chapter or suitable reference standards calibrated against the primary reference suspensions may be used.
- *Stray light*: this is a significant source of error in low level turbidimetric measurement; stray light reaches the detector of an optical system, but does not come from the sample; < 0.15 NTU for the range 0-10 NTU, < 0.5 NTU for the range 10-1000 NTU.

Instruments complying with the above characteristics and verified using the reference suspensions described under Visual method may be used instead of visual examination for determination of compliance with monograph requirements.

Instruments with range or resolution, accuracy and repeatability capabilities other than those mentioned above may be used provided they are sufficiently validated and are capable for the intended use. The test methodology for the specific substance/product to be analysed must also be validated to demonstrate its analytical capability. The instrument and methodology should be consistent with the attributes of the product to be tested.

01/2008:20202

2.2.2. DEGREE OF COLORATION OF LIQUIDS

The examination of the degree of coloration of liquids in the range brown-yellow-red is carried out by one of the 2 methods below, as prescribed in the monograph.

A solution is *colourless* if it has the appearance of *water R* or the solvent or is not more intensely coloured than reference solution B_9.

METHOD I

Using identical tubes of colourless, transparent, neutral glass of 12 mm external diameter, compare 2.0 mL of the liquid to be examined with 2.0 mL of *water R* or of the solvent or of the reference solution (see Tables of reference solutions) prescribed in the monograph. Compare the colours in diffused daylight, viewing horizontally against a white background.

METHOD II

Using identical tubes of colourless, transparent, neutral glass with a flat base and an internal diameter of 15 mm to 25 mm, compare the liquid to be examined with *water R* or the solvent or the reference solution (see Tables of reference solutions) prescribed in the monograph, the depth of the layer being 40 mm. Compare the colours in diffused daylight, viewing vertically against a white background.

REAGENTS

Primary solutions

Yellow solution. Dissolve 46 g of *ferric chloride R* in about 900 mL of a mixture of 25 mL of *hydrochloric acid R* and 975 mL of *water R* and dilute to 1000.0 mL with the same

mixture. Titrate and adjust the solution to contain 45.0 mg of $FeCl_3,6H_2O$ per millilitre by adding the same acidic mixture. Protect the solution from light.

Titration. Place in a 250 mL conical flask fitted with a ground-glass stopper, 10.0 mL of the solution, 15 mL of *water R*, 5 mL of *hydrochloric acid R* and 4 g of *potassium iodide R*, close the flask, allow to stand in the dark for 15 min and add 100 mL of *water R*. Titrate the liberated iodine with *0.1 M sodium thiosulfate*, using 0.5 mL of *starch solution R*, added towards the end of the titration, as indicator.

1 mL of *0.1 M sodium thiosulfate* is equivalent to 27.03 mg of $FeCl_3,6H_2O$.

Red solution. Dissolve 60 g of *cobalt chloride R* in about 900 mL of a mixture of 25 mL of *hydrochloric acid R* and 975 mL of *water R* and dilute to 1000.0 mL with the same mixture. Titrate and adjust the solution to contain 59.5 mg of $CoCl_2,6H_2O$ per millilitre by adding the same acidic mixture.

Titration. Place in a 250 mL conical flask fitted with a ground-glass stopper, 5.0 mL of the solution, 5 mL of *dilute hydrogen peroxide solution R* and 10 mL of a 300 g/L solution of *sodium hydroxide R*. Boil gently for 10 min, allow to cool and add 60 mL of *dilute sulfuric acid R* and 2 g of *potassium iodide R*. Close the flask and dissolve the precipitate by shaking gently. Titrate the liberated iodine with *0.1 M sodium thiosulfate*, using 0.5 mL of *starch solution R*, added towards the end of the titration, as indicator. The end-point is reached when the solution turns pink.

1 mL of *0.1 M sodium thiosulfate* is equivalent to 23.79 mg of $CoCl_2,6H_2O$.

Blue primary solution. Dissolve 63 g of *copper sulfate R* in about 900 mL of a mixture of 25 mL of *hydrochloric acid R* and 975 mL of *water R* and dilute to 1000.0 mL with the same mixture. Titrate and adjust the solution to contain 62.4 mg of $CuSO_4,5H_2O$ per millilitre by adding the same acidic mixture.

Titration. Place in a 250 mL conical flask fitted with a ground-glass stopper, 10.0 mL of the solution, 50 mL of *water R*, 12 mL of *dilute acetic acid R* and 3 g of *potassium iodide R*. Titrate the liberated iodine with *0.1 M sodium thiosulfate*, using 0.5 mL of *starch solution R*, added towards the end of the titration, as indicator. The end-point is reached when the solution shows a slight pale brown colour.

1 mL of *0.1 M sodium thiosulfate* is equivalent to 24.97 mg of $CuSO_4,5H_2O$.

Standard solutions

Using the 3 primary solutions, prepare the 5 standard solutions as follows (Table 2.2.2.-1):

Table 2.2.2.-1

Standard solution	Volume in millilitres			
	Yellow solution	Red solution	Blue solution	Hydrochloric acid (10 g/L HCl)
B (brown)	3.0	3.0	2.4	1.6
BY (brownish-yellow)	2.4	1.0	0.4	6.2
Y (yellow)	2.4	0.6	0.0	7.0
GY (greenish-yellow)	9.6	0.2	0.2	0.0
R (red)	1.0	2.0	0.0	7.0

Reference solutions for Methods I and II

Using the 5 standard solutions, prepare the following reference solutions.

Table 2.2.2.-2. - *Reference solutions B*

Reference solution	Volumes in millilitres	
	Standard solution B	Hydrochloric acid (10 g/L HCl)
B_1	75.0	25.0
B_2	50.0	50.0
B_3	37.5	62.5
B_4	25.0	75.0
B_5	12.5	87.5
B_6	5.0	95.0
B_7	2.5	97.5
B_8	1.5	98.5
B_9	1.0	99.0

Table 2.2.2.-3. - *Reference solutions BY*

Reference solution	Volumes in millilitres	
	Standard solution BY	Hydrochloric acid (10 g/L HCl)
BY_1	100.0	0.0
BY_2	75.0	25.0
BY_3	50.0	50.0
BY_4	25.0	75.0
BY_5	12.5	87.5
BY_6	5.0	95.0
BY_7	2.5	97.5

Table 2.2.2.-4. - *Reference solutions Y*

Reference solution	Volumes in millilitres	
	Standard solution Y	Hydrochloric acid (10 g/L HCl)
Y_1	100.0	0.0
Y_2	75.0	25.0
Y_3	50.0	50.0
Y_4	25.0	75.0
Y_5	12.5	87.5
Y_6	5.0	95.0
Y_7	2.5	97.5

Table 2.2.2.-5. - *Reference solutions GY*

Reference solution	Volumes in millilitres	
	Standard solution GY	Hydrochloric acid (10 g/L HCl)
GY_1	25.0	75.0
GY_2	15.0	85.0
GY_3	8.5	91.5
GY_4	5.0	95.0
GY_5	3.0	97.0
GY_6	1.5	98.5
GY_7	0.75	99.25

Table 2.2.2.-6. - *Reference solutions R*

Reference solution	Volumes in millilitres	
	Standard solution R	Hydrochloric acid (10 g/L HCl)
R_1	100.0	0.0
R_2	75.0	25.0
R_3	50.0	50.0
R_4	37.5	62.5
R_5	25.0	75.0
R_6	12.5	87.5
R_7	5.0	95.0

Storage

For Method I, the reference solutions may be stored in sealed tubes of colourless, transparent, neutral glass of 12 mm external diameter, protected from light.

For Method II, prepare the reference solutions immediately before use from the standard solutions.

01/2008:20203

2.2.3. POTENTIOMETRIC DETERMINATION OF pH

The pH is a number which represents conventionally the hydrogen ion concentration of an aqueous solution. For practical purposes, its definition is an experimental one. The pH of a solution to be examined is related to that of a reference solution (pH_s) by the following equation:

$$\mathrm{pH} = \mathrm{pH_s} - \frac{E - E_s}{k}$$

in which E is the potential, expressed in volts, of the cell containing the solution to be examined and E_s is the potential, expressed in volts, of the cell containing the solution of known pH (pH_s), k is the change in potential per unit change in pH expressed in volts, and calculated from the Nernst equation.

Table 2.2.3.-1. – *Values of k at different temperatures*

Temperature (°C)	*k* (V)
15	0.0572
20	0.0582
25	0.0592
30	0.0601
35	0.0611

The potentiometric determination of pH is made by measuring the potential difference between 2 appropriate electrodes immersed in the solution to be examined: 1 of these electrodes is sensitive to hydrogen ions (usually a glass electrode) and the other is the reference electrode (for example, a saturated calomel electrode).

Apparatus. The measuring apparatus is a voltmeter with an input resistance at least 100 times that of the electrodes used. It is normally graduated in pH units and has a sensitivity such that discrimination of at least 0.05 pH unit or at least 0.003 V may be achieved.

Method. Unless otherwise prescribed in the monograph, all measurements are made at the same temperature (20-25 °C). Table 2.2.3.-2 shows the variation of pH with respect to temperature of a number of reference buffer solutions used for calibration. For the temperature correction, when necessary, follow the manufacturer's instructions. The apparatus is calibrated with the buffer solution of potassium hydrogen phthalate (primary standard) and 1 other buffer solution of different pH (preferably one shown in Table 2.2.3.-2). The pH of a third buffer solution of intermediate pH read off on the scale must not differ by more than 0.05 pH unit from the value corresponding to this solution. Immerse the electrodes in the solution to be examined and take the reading in the same conditions as for the buffer solutions.

When the apparatus is in frequent use, checks must be carried out regularly. If not, such checks should be carried out before each measurement.

All solutions to be examined and the reference buffer solutions must be prepared using *carbon dioxide-free water R*.

PREPARATION OF REFERENCE BUFFER SOLUTIONS

Potassium tetraoxalate 0.05 M. Dissolve 12.61 g of $C_4H_3KO_8,2H_2O$ in *carbon dioxide-free water R* and dilute to 1000.0 mL with the same solvent.

Potassium hydrogen tartrate, saturated at 25 °C. Shake an excess of $C_4H_5KO_6$ vigorously with *carbon dioxide-free water R* at 25 °C. Filter or decant. Prepare immediately before use.

Potassium dihydrogen citrate 0.05 M. Dissolve 11.41 g of $C_6H_7KO_7$ in *carbon dioxide-free water R* and dilute to 1000.0 mL with the same solvent. Prepare immediately before use.

Potassium hydrogen phthalate 0.05 M. Dissolve 10.13 g of $C_8H_5KO_4$, previously dried for 1 h at 110 ± 2 °C, in *carbon dioxide-free water R* and dilute to 1000.0 mL with the same solvent.

Potassium dihydrogen phosphate 0.025 M + disodium hydrogen phosphate 0.025 M. Dissolve 3.39 g of KH_2PO_4 and 3.53 g of Na_2HPO_4, both previously dried for 2 h at 120 ± 2 °C, in *carbon dioxide-free water R* and dilute to 1000.0 mL with the same solvent.

Potassium dihydrogen phosphate 0.0087 M + disodium hydrogen phosphate 0.0303 M. Dissolve 1.18 g of KH_2PO_4 and 4.30 g of Na_2HPO_4, both previously dried for 2 h at 120 ± 2 °C, in *carbon dioxide-free water R* and dilute to 1000.0 mL with the same solvent.

Disodium tetraborate 0.01 M. Dissolve 3.80 g of $Na_2B_4O_7,10H_2O$ in *carbon dioxide-free water R* and dilute to 1000.0 mL with the same solvent. Store protected from atmospheric carbon dioxide.

Sodium carbonate 0.025 M + sodium hydrogen carbonate 0.025 M. Dissolve 2.64 g of Na_2CO_3 and 2.09 g of $NaHCO_3$ in *carbon dioxide-free water R* and dilute to 1000.0 mL with the same solvent. Store protected from atmospheric carbon dioxide.

Calcium hydroxide, saturated at 25 °C. Shake an excess of *calcium hydroxide R* with *carbon dioxide-free water R* and decant at 25 °C. Store protected from atmospheric carbon dioxide.

STORAGE

Store buffer solutions in suitable chemically resistant, tight containers, such as type I glass bottles or plastic containers suitable for aqueous solutions.

Table 2.2.3.-2. – *pH of reference buffer solutions at various temperatures*

Temperature (°C)	Potassium tetraoxalate 0.05 M	Potassium hydrogen tartrate saturated at 25 °C	Potassium dihydrogen citrate 0.05 M	Potassium hydrogen phthalate 0.05 M	Potassium dihydrogen phosphate 0.025 M + disodium hydrogen phosphate 0.025 M	Potassium dihydrogen phosphate 0.0087 M + disodium hydrogen phosphate 0.0303 M	Disodium tetraborate 0.01 M	Sodium carbonate 0.025 M + sodium bicarbonate 0.025 M	Calcium hydroxide, saturated at 25°C
	$C_4H_3KO_8,2H_2O$	$C_4H_5KO_6$	$C_6H_7KO_7$	$C_8H_5KO_4$	KH_2PO_4+ Na_2HPO_4	KH_2PO_4+ Na_2HPO_4	$Na_2B_4O_7$, $10H_2O$	Na_2CO_3+ $NaHCO_3$	$Ca(OH)_2$
15	1.67		3.80	4.00	6.90	7.45	9.28	10.12	12.81
20	1.68		3.79	4.00	6.88	7.43	9.23	10.06	12.63
25	1.68	3.56	3.78	4.01	6.87	7.41	9.18	10.01	12.45
30	1.68	3.55	3.77	4.02	6.85	7.40	9.14	9.97	12.29
35	1.69	3.55	3.76	4.02	6.84	7.39	9.10	9.93	12.13
$\frac{\Delta pH^{(1)}}{\Delta t}$	+ 0.001	− 0.0014	− 0.0022	+ 0.0012	− 0.0028	− 0.0028	− 0.0082	− 0.0096	− 0.034

(1) pH variation per degree Celsius.

01/2008:20204

2.2.4. RELATIONSHIP BETWEEN REACTION OF SOLUTION, APPROXIMATE pH AND COLOUR OF CERTAIN INDICATORS

To 10 mL of the solution to be examined, add 0.1 mL of the indicator solution, unless otherwise prescribed in Table 2.2.4.-1.

Table 2.2.4.-1

Reaction	pH	Indicator	Colour
Alkaline	> 8	*Red litmus paper R*	Blue
		Thymol blue solution R (0.05 mL)	Grey or violet-blue
Slightly alkaline	8.0 – 10.0	*Phenolphthalein solution R* (0.05 mL)	Colourless or pink
		Thymol blue solution R (0.05 mL)	Grey
Strongly alkaline	> 10	*Phenolphthalein paper R*	Red
		Thymol blue solution R (0.05 mL)	Violet-blue
Neutral	6.0 – 8.0	*Methyl red solution R*	Yellow
		Phenol red solution R (0.05 mL)	
Neutral to methyl red	4.5 – 6.0	*Methyl red solution R*	Orange-red
Neutral to phenolphtalein	< 8.0	*Phenolphthalein solution R* (0.05 mL)	Colourless; pink or red after adding 0.05 mL of 0.1 M base
Acid	< 6	*Methyl red solution R*	Orange or red
		Bromothymol blue solution R1	Yellow
Slightly acid	4.0 – 6.0	*Methyl red solution R*	Orange
		Bromocresol green solution R	Green or blue
Strongly acid	< 4	*Congo red paper R*	Green or blue

01/2008:20205

2.2.5. RELATIVE DENSITY

The relative density $d_{t_2}^{t_1}$ of a substance is the ratio of the mass of a certain volume of a substance at temperature t_1 to the mass of an equal volume of water at temperature t_2.

Unless otherwise indicated, the relative density d_{20}^{20} is used. Relative density is also commonly expressed as d_4^{20}. Density ρ_{20}, defined as the mass of a unit volume of the substance at 20 °C may also be used, expressed in kilograms per cubic metre or grams per cubic centimetre (1 kg·m^{-3} = 10^{-3} g·cm^{-3}). These quantities are related by the following equations where density is expressed in grams per cubic centimetre:

$$\rho_{20} = 0.998203 \times d_{20}^{20} \text{ or } d_{20}^{20} = 1.00180 \times \rho_{20}$$

$$\rho_{20} = 0.999972 \times d_4^{20} \text{ or } d_4^{20} = 1.00003 \times \rho_{20}$$

$$d_4^{20} = 0.998230 \times d_{20}^{20}$$

Relative density or density are measured with the precision to the number of decimals prescribed in the monograph using a density bottle (solids or liquids), a hydrostatic balance (solids), a hydrometer (liquids) or a digital density meter with an oscillating transducer (liquids and gases). When the determination is made by weighing, the buoyancy of air is disregarded, which may introduce an error of 1 unit in the 3rd decimal place. When using a density meter, the buoyancy of air has no influence.

Oscillating transducer density meter. The apparatus consists of:

- a U-shaped tube, usually of borosilicate glass, which contains the liquid to be examined;
- a magneto-electrical or piezo-electrical excitation system that causes the tube to oscillate as a cantilever oscillator at a characteristic frequency depending on the density of the liquid to be examined;
- a means of measuring the oscillation period (T), which may be converted by the apparatus to give a direct reading of density, or used to calculate density using the constants A and B described below.

The resonant frequency (*f*) is a function of the spring constant (*c*) and the mass (*m*) of the system:

$$f^2 = \frac{1}{T^2} = \frac{c}{m} \times \frac{1}{4\pi^2}$$

Hence:

$$T^2 = \left(\frac{M}{c} + \frac{\rho \times V}{c}\right) \times 4\pi^2$$

M = mass of the tube,

V = inner volume of the tube.

Introduction of 2 constants $A = c/\left(4\pi^2 \times V\right)$ and $B = M/V$, leads to the classical equation for the oscillating transducer:

$$\rho = A \times T^2 - B$$

The constants *A* and *B* are determined by operating the instrument with the U-tube filled with 2 different samples of known density, for example, degassed *water R* and air. Control measurements are made daily using degassed *water R*. The results displayed for the control measurement using degassed *water R* shall not deviate from the reference value (ρ_{20} = 0.998203 g·cm^{-3}, d_{20}^{20} = 1.000000) by more than its specified error. For example, an instrument specified to ± 0.0001 g·cm^{-3} shall display 0.9982 ± 0.0001 g·cm^{-3} in order to be suitable for further measurement. Otherwise a re-adjustment is necessary. Calibration with certified reference materials is carried out regularly. Measurements are made using the same procedure as for calibration. The liquid to be examined is equilibrated in a thermostat at 20 °C before introduction into the tube, if necessary, to avoid the formation of bubbles and to reduce the time required for measurement.

Factors affecting accuracy include:

- temperature uniformity throughout the tube,
- non-linearity over a range of density,
- parasitic resonant effects,
- viscosity, whereby solutions with a higher viscosity than the calibrant have a density that is apparently higher than the true value.

The effects of non-linearity and viscosity may be avoided by using calibrants that have density and viscosity close to those of the liquid to be examined (± 5 per cent for density, ± 50 per cent for viscosity). The density meter may have functions for automatic viscosity correction and for correction of errors arising from temperature changes and non-linearity.

Precision is a function of the repeatability and stability of the oscillator frequency, which is dependent on the stability of the volume, mass and spring constant of the cell.

Density meters are able to achieve measurements with an error of the order of 1 × 10^{-3} g·cm^{-3} to 1 × 10^{-5} g·cm^{-3} and a repeatability of 1 × 10^{-4} g·cm^{-3} to 1 × 10^{-6} g·cm^{-3}.

01/2008:20206

2.2.6. REFRACTIVE INDEX

The refractive index of a medium with reference to air is equal to the ratio of the sine of the angle of incidence of a beam of light in air to the sine of the angle of refraction of the refracted beam in the given medium.

Unless otherwise prescribed, the refractive index is measured at 20 ± 0.5 °C, with reference to the wavelength of the D-line of sodium (λ = 589.3 nm); the symbol is then n_D^{20}.

Refractometers normally determine the critical angle. In such apparatus the essential part is a prism of known refractive index in contact with the liquid to be examined.

Calibrate the apparatus using certified reference materials.

When white light is used, the refractometer is provided with a compensating system. The apparatus gives readings accurate to at least the third decimal place and is provided with a means of operation at the temperature prescribed. The thermometer is graduated at intervals of 0.5 °C or less.

01/2008:20207

2.2.7. OPTICAL ROTATION

Optical rotation is the property displayed by chiral substances of rotating the plane of polarisation of polarised light.

Optical rotation is considered to be positive (+) for dextrorotatory substances (i.e. those that rotate the plane of polarisation in a clockwise direction) and negative (–) for laevorotatory substances.

The specific optical rotation $[\alpha_m]_\lambda^t$ is the rotation, expressed in radians (rad), measured at the temperature *t* and at the wavelength λ given by a 1 m thickness of liquid or a solution containing 1 kg/m^3 of optically active substance. For practical reasons the specific optical rotation $[\alpha_m]_\lambda^t$ is normally expressed in milliradians metre squared per kilogram (mrad·m^2·kg^{-1}).

The Pharmacopoeia adopts the following conventional definitions.

The *angle of optical rotation* of a neat liquid is the angle of rotation α, expressed in degrees (°), of the plane of polarisation at the wavelength of the D-line of sodium (λ = 589.3 nm) measured at 20 °C using a layer of 1 dm; for a solution, the method of preparation is prescribed in the monograph.

The *specific optical rotation* $[\alpha]_D^{20}$ of a liquid is the angle of rotation α, expressed in degrees (°), of the plane of polarisation at the wavelength of the D-line of sodium (λ = 589.3 nm) measured at 20 °C in the liquid substance to be examined, calculated with reference to a layer of 1 dm and divided by the density expressed in grams per cubic centimetre.

The *specific optical rotation* $[\alpha]_D^{20}$ of a substance in solution is the angle of rotation α, expressed in degrees (°), of the plane of polarisation at the wavelength of the D-line of sodium (λ = 589.3 nm) measured at 20 °C in a solution of the substance to be examined and calculated with reference to a layer of 1 dm containing 1 g/mL of the substance. The specific optical rotation of a substance in solution is always expressed with reference to a given solvent and concentration.

In the conventional system adopted by the Pharmacopoeia the specific optical rotation is expressed by its value without units; the actual units, degree millilitres per decimetre gram [(°)·ml·dm^{-1}·g^{-1}] are understood.

The conversion factor from the International System to the Pharmacopoeia system is the following:

$$[\alpha_m]_\lambda^t = [\alpha]_\lambda^t \times 0.1745$$

In certain cases specified in the monograph the angle of rotation may be measured at temperatures other than 20 °C and at other wavelengths.

The polarimeter must be capable of giving readings to the nearest 0.01°. The scale is usually checked by means of certified quartz plates. The linearity of the scale may be checked by means of sucrose solutions.

Method. Determine the zero of the polarimeter and the angle of rotation of polarised light at the wavelength of the D-line of sodium (λ = 589.3 nm) at 20 ± 0.5 °C, unless otherwise prescribed. Measurements may be carried out at other temperatures only where the monograph indicates the temperature correction to be made to the measured optical rotation. Determine the zero of the apparatus with the tube closed; for liquids the zero is determined with the tube empty and for solids filled with the prescribed solvent.

Calculate the specific optical rotation using the following formulae.

For neat liquids:

$$[\alpha]_{\mathrm{D}}^{20} = \frac{\alpha}{l \cdot \rho_{20}}$$

For substances in solution:

$$[\alpha]_{\mathrm{D}}^{20} = \frac{1000\alpha}{l \cdot c}$$

where c is the concentration of the solution in grams per litre.

Calculate the content c in grams per litre or the content c' in per cent *m/m* of a dissolved substance using the following formulae:

$$c = \frac{1000\alpha}{l \cdot [\alpha]_{\mathrm{D}}^{20}} \qquad c' = \frac{100\alpha}{l \cdot [\alpha]_{\mathrm{D}}^{20} \cdot \rho_{20}}$$

α = angle of rotation in degrees read at 20 ± 0.5°C;

l = length in decimetres of the polarimeter tube;

ρ_{20} = density at 20 °C in grams per cubic centimetre. For the purposes of the Pharmacopoeia, density is replaced by relative density (*2.2.5*).

01/2008:20208

2.2.8. VISCOSITY

The *dynamic* viscosity or *viscosity coefficient* η is the tangential force per unit surface, known as *shearing stress* τ and expressed in pascals, necessary to move, parallel to the sliding plane, a layer of liquid of 1 square metre at a rate (v) of 1 metre per second relative to a parallel layer at a distance (x) of 1 metre.

The ratio dv/dx is a speed gradient giving the *rate of shear D* expressed in reciprocal seconds (s^{-1}), so that $\eta = \tau/D$.

The unit of dynamic viscosity is the pascal second (Pa·s). The most commonly used submultiple is the millipascal second (mPa·s).

The *kinematic viscosity* ν, expressed in square metres per second, is obtained by dividing the dynamic viscosity η by the density ρ expressed in kilograms per cubic metre, of the liquid measured at the same temperature, i.e. $\nu = \eta/\rho$. The kinematic viscosity is usually expressed in square millimetres per second.

A capillary viscometer may be used for determining the viscosity of Newtonian liquids and a rotating viscometer for determining the viscosity of Newtonian and non-Newtonian liquids. Other viscometers may be used provided that the accuracy and precision is not less than that obtained with the viscometers described below.

01/2008:20209

2.2.9. CAPILLARY VISCOMETER METHOD

The determination of viscosity using a suitable capillary viscometer is carried out at a temperature of 20 ± 0.1 °C, unless otherwise prescribed. The time required for the level of the liquid to drop from one mark to the other is measured with a stop-watch to the nearest one-fifth of a second. The result is valid only if two consecutive readings do not differ by more than 1 per cent. The average of not fewer than three readings gives the flow time of the liquid to be examined.

Calculate the dynamic viscosity η (*2.2.8*) in millipascal seconds using the formula:

$$\eta = k\rho t$$

k = constant of the viscometer, expressed in square millimetres per second squared,

ρ = density of the liquid to be examined expressed in milligrams per cubic millimetre, obtained by multiplying its relative density (d_{20}^{20}) by 0.9982,

t = flow time, in seconds, of the liquid to be examined.

The constant k is determined using a suitable viscometer calibration liquid.

To calculate the kinematic viscosity ($mm^2 \cdot s^{-1}$), use the following formula: $\nu = kt$.

The determination may be carried out with an apparatus (Figure 2.2.9.-1) having the specifications described in Table 2.2.9.-1[(1)]:

The minimum flow time should be 350 s for size no. 1 and 200 s for all other sizes.

Table 2.2.9.-1

Size number	Nominal constant of visco-meter	Kinematic viscosity range	Internal diameter of tube *R*	Volume of bulb *C*	Internal diameter of tube *N*
	$mm^2 \cdot s^{-2}$	$mm^2 \cdot s^{-1}$	mm (± 2 %)	mL (± 5 %)	mm
1	0.01	3.5 to 10	0.64	5.6	2.8 to 3.2
1A	0.03	6 to 30	0.84	5.6	2.8 to 3.2
2	0.1	20 to 100	1.15	5.6	2.8 to 3.2
2A	0.3	60 to 300	1.51	5.6	2.8 to 3.2
3	1.0	200 to 1000	2.06	5.6	3.7 to 4.3
3A	3.0	600 to 3000	2.74	5.6	4.6 to 5.4
4	10	2000 to 10 000	3.70	5.6	4.6 to 5.4
4A	30	6000 to 30 000	4.07	5.6	5.6 to 6.4
5	100	20 000 to 100 000	6.76	5.6	6.8 to 7.5

(1) The European Pharmacopoeia describes the system proposed by the International Organisation for Standardisation (ISO).

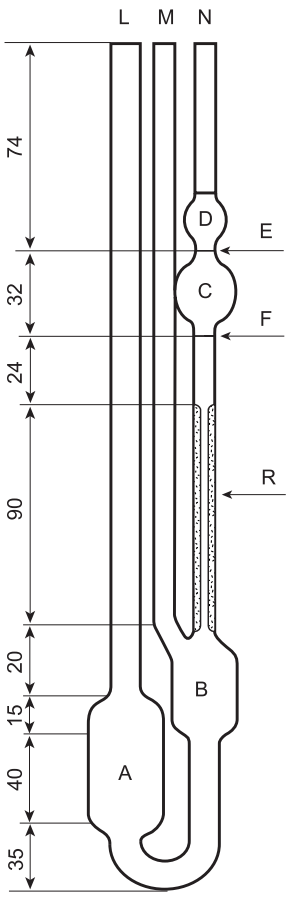

Figure 2.2.9.- 1. – *Suspended level viscometer*

Dimensions in millimetres

Method. Fill the viscometer through tube (*L*) with a sufficient quantity of the liquid to be examined, previously brought to 20 °C unless otherwise prescribed, to fill bulb (*A*) but ensuring that the level of liquid in bulb (*B*) is below the exit to ventilation tube (*M*). Immerse the viscometer in the bath of water at 20 ± 0.1 °C, unless otherwise prescribed, maintain it in the upright position and allow to stand for not less than 30 min to allow the temperature to reach equilibrium. Close tube (*M*) and raise the level of the liquid in tube (*N*) up to a level about 8 mm above mark (*E*). Keep the liquid at this level by closing tube (*N*) and opening tube (*M*). Open tube (*N*) and measure, with a stop-watch to the nearest one-fifth of a second, the time required for the level of the liquid to drop from mark (*E*) to (*F*).

01/2008:20210

2.2.10. VISCOSITY - ROTATING VISCOMETER METHOD

The principle of the method is to measure the force acting on a rotor (torque) when it rotates at a constant angular velocity (rotational speed) in a liquid. Rotating viscometers are used for measuring the viscosity of Newtonian (shear-independent viscosity) or non-Newtonian liquids (shear dependent viscosity or apparent viscosity). Rotating viscometers can be divided in 2 groups, namely absolute and relative viscometers. In absolute viscometers the flow in the measuring geometry is well defined. The measurements result in absolute viscosity values, which can be compared with any other absolute values. In relative viscometers the flow in the measuring geometry is not defined. The measurements result in relative viscosity values, which cannot be compared with absolute values or other relative values if not determined by the same relative viscometer method.

Different measuring systems are available for given viscosity ranges as well as several rotational speeds.

APPARATUS

The following types of instruments are most common.

CONCENTRIC CYLINDER VISCOMETERS (ABSOLUTE VISCOMETERS)

In the concentric cylinder viscometer (coaxial double cylinder viscometer or simply coaxial cylinder viscometer), the viscosity is determined by placing the liquid in the gap between the inner cylinder and the outer cylinder. Viscosity measurement can be performed by rotating the inner cylinder (Searle type viscometer) or the outer cylinder (Couette type viscometer), as shown in Figures 2.2.10.-1 and 2.2.10.-2, respectively. For laminar flow, the viscosity (or apparent viscosity) η expressed in pascal-seconds is given by the following formula:

$$\eta = \frac{1}{\omega}\left(\frac{M}{4\pi h}\right)\left(\frac{1}{R_i^2} - \frac{1}{R_o^2}\right) = k\frac{M}{\omega}$$

M	=	torque in newton-metres acting on the cylinder surface,
ω	=	angular velocity in radians per second,
h	=	height of immersion in metres of the inner cylinder in the liquid medium,
R_i	=	radius in metres of the inner cylinder,
R_o	=	radius in metres of the outer cylinder,
k	=	constant of the apparatus, expressed in radians per cubic metre.

For non-Newtonian liquids it is indispensable to specify the shear stress (τ) or the shear rate (γ) at which the viscosity is measured. Under narrow gap conditions (conditions satisfied in absolute viscometers), there is a proportional relationship between *M* and τ and also between ω and γ:

$$\tau = AM \qquad \gamma = B\omega$$

where A and B are constants for the instrument and are calculated from the following expressions:

– *for concentric surface*:

$$A = \frac{1}{4\pi h}\frac{R_i^2 + R_0^2}{R_i^2 R_0^2} \qquad B = \frac{R_i^2 + R_0^2}{R_0^2 - R_i^2}$$

– *for cone-plates*:

$$A = \frac{3}{2\pi R^3} \qquad B = \frac{1}{\alpha}$$

M	=	torque in Newton-metres acting on the cone or cylinder surface,
ω	=	angular velocity in radians per second,
R_i	=	radius in metres of the inner cylinder,
R_0	=	radius in metres of the outer cylinder,
R	=	radius in metres of the cone,
h	=	height of immersion in metres of the inner cylinder in the liquid medium,
α	=	angle in radians between the flat disk and the cone,
τ	=	shear stress in pascals (Pa),
γ	=	shear rate in reciprocal seconds (s^{-1}).

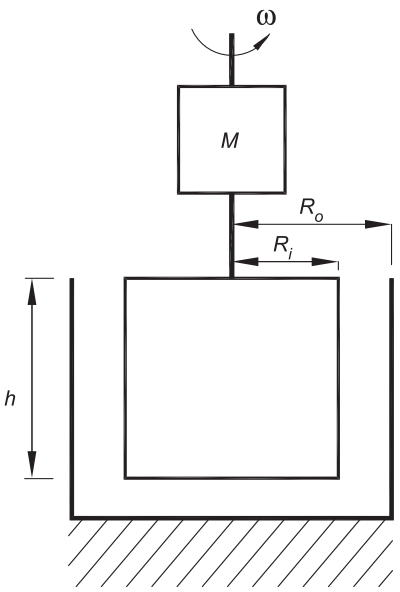

Figure 2.2.10.-1

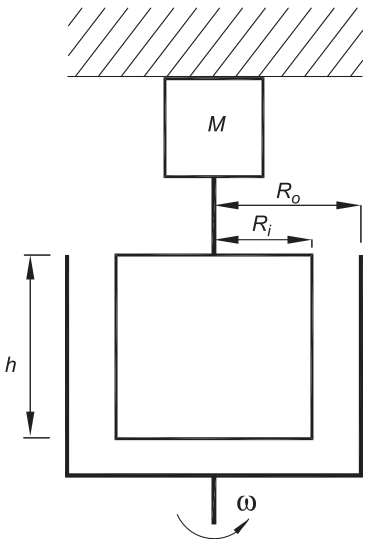

Figure 2.2.10.-2

CONE-PLATE VISCOMETERS (ABSOLUTE VISCOMETERS)

In the cone-plate viscometer, the liquid is introduced into the gap between a flat disc and a cone forming a define angle. Viscosity measurement can be performed by rotating the cone or the flat disc, as shown in Figures 2.2.10.-3 and 2.2.10.-4, respectively. For laminar flow, the viscosity (or apparent viscosity) η expressed in pascal-seconds is given by the following formula:

$$\eta = \left(\frac{M}{\omega}\right)\left(\frac{3\alpha}{2\pi R^3}\right) = k\frac{M}{\omega}$$

M	=	torque in Newton-metres acting on the flat disc or cone surface,
ω	=	angular velocity in radians per second,
α	=	angle in radians between the flat disc and the cone,
R	=	radius in metres of the cone,
k	=	constant of the apparatus, expressed in radians per cubic metre.

Constants A, B of the apparatus (see under concentric cylinder viscometers).

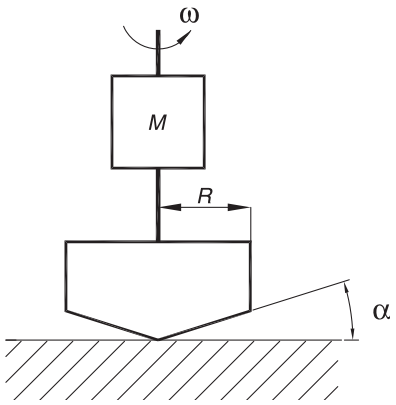

Figure 2.2.10.-3

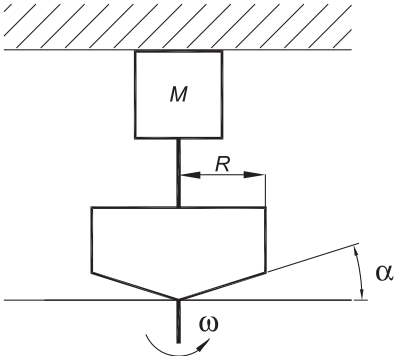

Figure 2.2.10.-4

SPINDLE VISCOMETERS (RELATIVE VISCOMETERS)

In the spindle viscometer, the viscosity is determined by rotating a spindle (for example, cylinder- or disc-shaped, as shown in Figures 2.2.10.-5 and 2.2.10.-6, respectively) immersed in the liquid. Relative values of viscosity (or apparent viscosity) can be directly calculated using conversion factors from the scale reading at a given rotational speed.

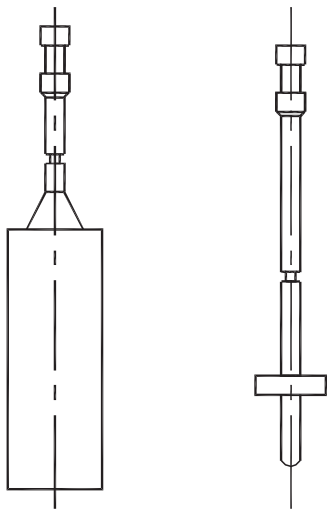

Figure 2.2.10.-5

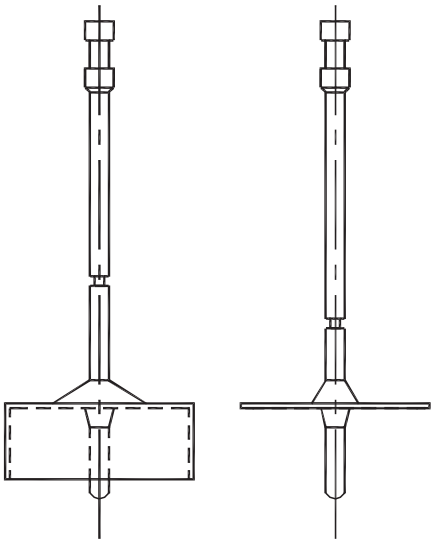

Figure 2.2.10.-6

In a general way, the constant k of the apparatus may be determined at various speeds of rotation using a certified viscometer calibration liquid. The viscosity η then corresponds to the formula:

$$\eta = k\frac{M}{\omega}$$

METHOD

Measure the viscosity (or apparent viscosity) according to the instructions for the operation of the rotating viscometer. The temperature for measuring the viscosity is indicated in the monograph. For non-Newtonian systems, the monograph indicates the type of viscometer to be used and if absolute viscometers are used the angular velocity or the shear rate at which the measurement is made. If it is impossible to obtain the indicated shear rate exactly, use a shear rate slightly higher and a shear rate slightly lower and interpolate.

With relative viscometers the shear rate is not the same throughout the sample and therefore it cannot be defined. Under these conditions, the viscosity of non-Newtonian liquids determined from the previous formula has a relative character, which depends on the type of spindle and the angular velocity as well as the dimensions of the sample container (Ø = minimum 80 mm) and the depth of immersion of the spindle. The values obtained are comparable only if the method is carried out under experimental conditions that are rigorously the same.

01/2008:20211

2.2.11. DISTILLATION RANGE

The distillation range is the temperature interval, corrected for a pressure of 101.3 kPa (760 Torr), within which a liquid, or a specified fraction of a liquid, distils in the following conditions.

Apparatus. The apparatus (see Figure 2.2.11.-1) consists of a distillation flask (*A*), a straight tube condenser (*B*) which fits on to the side arm of the flask and a plain-bend adaptor (*C*) attached to the end of the condenser. The lower end of the condenser may, alternatively, be bent to replace the adaptor. A thermometer is inserted in the neck of the flask so that the upper end of the mercury reservoir is 5 mm lower than the junction of the lower wall of the lateral tube. The thermometer is graduated at 0.2 °C intervals and the scale covers a range of about 50 °C. During the determination, the flask, including its neck, is protected from draughts by a suitable screen.

Method. Place in the flask (*A*) 50.0 mL of the liquid to be examined and a few pieces of porous material. Collect the distillate in a 50 mL cylinder graduated in 1 mL. Cooling by circulating water is essential for liquids distilling below 150 °C. Heat the flask so that boiling is rapidly achieved and note the temperature at which the first drop of distillate falls into the cylinder. Adjust the heating to give a regular rate of distillation of 2-3 mL/min and note the temperature when the whole or the prescribed fraction of the liquid, measured at 20 °C, has distilled.

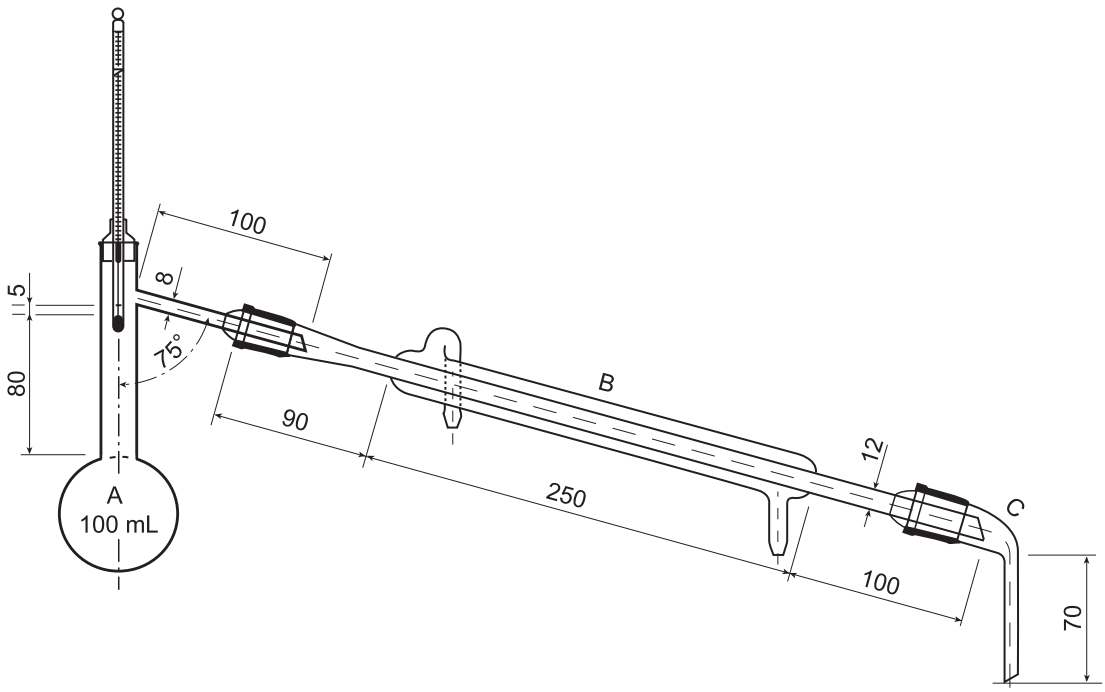

Figure 2.2.11.-1. – *Apparatus for the determination of distillation range*
Dimensions in millimetres

Correct the observed temperatures for barometric pressure by means of the formula:

$$t_1 = t_2 + k\,(101.3 - b)$$

t_1 = the corrected temperature,

t_2 = the observed temperature, at the barometric pressure b,

k = the correction factor taken from Table 2.2.11.-1 unless the factor is given,

b = the barometric pressure, expressed in kilopascals, during the distillation.

Table 2.2.11.-1. – *Temperature correction in relation to the pressure*

Distillation temperature	Correction factor *k*
up to 100 °C	0.30
above 100 °C up to 140 °C	0.34
above 140 °C up to 190 °C	0.38
above 190 °C up to 240 °C	0.41
above 240 °C	0.45

01/2008:20212

2.2.12. BOILING POINT

The boiling point is the corrected temperature at which the vapour pressure of a liquid is equal to 101.3 kPa.

Apparatus. The apparatus is that used for Distillation Range (*2.2.11*) with the exception that the thermometer is inserted in the neck of the flask so that the lower end of the mercury reservoir is level with the lower end of the neck of the distillation flask and that the flask is placed on a plate of isolating material pierced by a hole 35 mm in diameter.

Method. Place in the flask (*A*) 20 mL of the liquid to be examined and a few pieces of porous material. Heat the flask so that boiling is rapidly achieved and record the temperature at which liquid runs from the side-arm into the condenser.

Correct the observed temperature for barometric pressure by means of the formula:

$$t_1 = t_2 + k\,(101.3 - b)$$

t_1 = the corrected temperature,

t_2 = the observed temperature at barometric pressure b,

k = the correction factor as shown in Table 2.2.11.-1 under Distillation Range,

b = the barometric pressure, in kilopascals, at the time of the determination.

01/2008:20213

2.2.13. DETERMINATION OF WATER BY DISTILLATION

The apparatus (see Figure 2.2.13.-1) consists of a glass flask (*A*) connected by a tube (*D*) to a cylindrical tube (*B*) fitted with a graduated receiving tube (*E*) and reflux condenser (*C*). The receiving tube (*E*) is graduated in 0.1 mL. The source of heat is preferably an electric heater with rheostat control or an oil bath. The upper portion of the flask and the connecting tube may be insulated.

Method. Clean the receiving tube and the condenser of the apparatus, thoroughly rinse with water, and dry.

Introduce 200 mL of *toluene R* and about 2 mL of *water R* into the dry flask. Distil for 2 h, then allow to cool for about 30 min and read the water volume to the nearest 0.05 mL. Place in the flask a quantity of the substance, weighed with an accuracy of 1 per cent, expected to give about 2 mL to 3 mL of water. If the substance has a pasty consistency, weigh it in a boat of metal foil. Add a few pieces of porous material and heat the flask gently for 15 min. When the toluene begins to boil, distil at the rate of about two drops per second until most of the water has distilled over, then increase the rate of distillation to about four drops per second. When the water has all distilled over, rinse the inside of the condenser tube with *toluene R*. Continue the distillation for 5 min, remove the heat, allow the receiving tube to cool to room temperature and dislodge any droplets of water which adhere to the walls of the receiving tube. When the water and toluene have completely separated, read the volume of water and calculate the content present in the substance as millilitres per kilogram, using the formula:

$$\frac{1000\,(n_2 - n_1)}{m}$$

m = the mass in grams of the substance to be examined,

n_1 = the number of millilitres of water obtained in the first distillation,

n_2 = the total number of millilitres of water obtained in the 2 distillations.

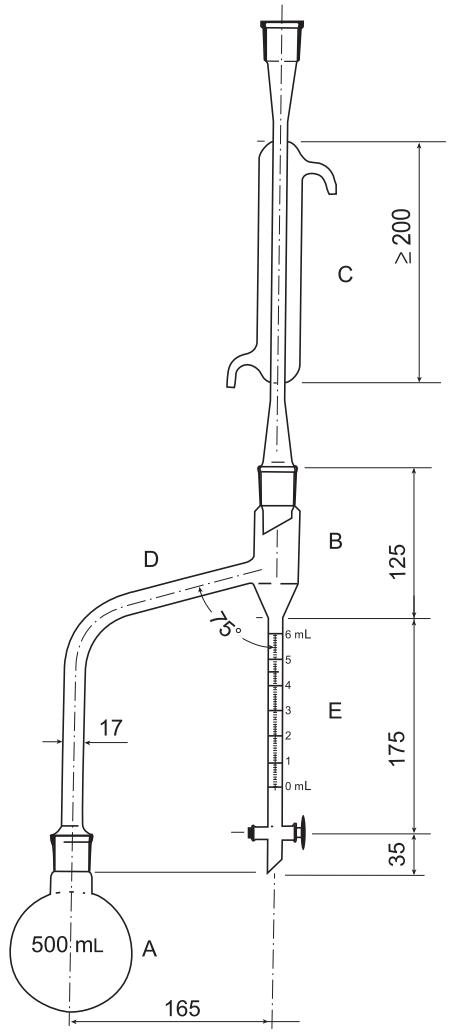

Figure 2.2.13.-1. – *Apparatus for the determination of water by distillation*
Dimensions in millimetres

01/2008:20214

2.2.14. MELTING POINT - CAPILLARY METHOD

The melting point determined by the capillary method is the temperature at which the last solid particle of a compact column of a substance in a tube passes into the liquid phase.

When prescribed in the monograph, the same apparatus and method are used for the determination of other factors, such as meniscus formation or melting range, that characterise the melting behaviour of a substance.

Apparatus. The apparatus consists of:

- a suitable glass vessel containing a liquid bath (for example, water, liquid paraffin or silicone oil) and fitted with a suitable means of heating,
- a suitable means of stirring, ensuring uniformity of temperature within the bath,
- a suitable thermometer with graduation at not more than 0.5 °C intervals and provided with an immersion mark. The range of the thermometer is not more than 100 °C,
- alkali-free hard-glass capillary tubes of internal diameter 0.9 mm to 1.1 mm with a wall 0.10 mm to 0.15 mm thick and sealed at one end.

Method. Unless otherwise prescribed, dry the finely powdered substance *in vacuo* and over *anhydrous silica gel R* for 24 h. Introduce a sufficient quantity into a capillary tube to give a compact column 4 mm to 6 mm in height. Raise the temperature of the bath to about 10 °C below the presumed melting point and then adjust the rate of heating to about 1 °C/min. When the temperature is 5 °C below the presumed melting point, correctly introduce the capillary tube into the instrument. For the apparatus described above, immerse the capillary tube so that the closed end is near the centre of the bulb of the thermometer, the immersion mark of which is at the level of the surface of the liquid. Record the temperature at which the last particle passes into the liquid phase.

Calibration of the apparatus. The apparatus may be calibrated using melting point reference substances such as those of the World Health Organization or other appropriate substances.

01/2008:20215

2.2.15. MELTING POINT - OPEN CAPILLARY METHOD

For certain substances, the following method is used to determine the melting point (also referred to as slip point and rising melting point when determined by this method).

Use glass capillary tubes open at both ends, about 80 mm long, having an external diameter of 1.4 mm to 1.5 mm and an internal diameter of 1.0 mm to 1.2 mm.

Introduce into each of 5 capillary tubes a sufficient amount of the substance, previously treated as described, to form in each tube a column about 10 mm high and allow the tubes to stand for the appropriate time and at the prescribed temperature.

Unless otherwise prescribed, substances with a waxy consistency are carefully and completely melted on a water-bath before introduction into the capillary tubes. Allow the tubes to stand at 2-8 °C for 2 h.

Attach one of the tubes to a thermometer graduated in 0.5 °C so that the substance is close to the bulb of the thermometer. Introduce the thermometer with the attached tube into a beaker so that the distance between the bottom of the beaker and the lower part of the bulb of the thermometer is 1 cm. Fill the beaker with water to a depth of 5 cm. Increase the temperature of the water gradually at a rate of 1 °C/min.

The temperature at which the substance begins to rise in the capillary tube is regarded as the melting point.

Repeat the operation with the other 4 capillary tubes and calculate the result as the mean of the 5 readings.

01/2008:20216

2.2.16. MELTING POINT - INSTANTANEOUS METHOD

The instantaneous melting point is calculated using the expression:

$$\frac{t_1 + t_2}{2}$$

in which t_1 is the first temperature and t_2 the second temperature read under the conditions stated below.

Apparatus. The apparatus consists of a metal block resistant to the substance to be examined, of good heat-conducting capacity, such as brass, with a carefully polished plane upper surface. The block is uniformly heated throughout its mass by means of a micro-adjustable gas heater or an electric heating device with fine adjustment. The block has a cylindrical cavity, wide enough to accomodate a thermometer, which should be maintained with the mercury column in the same position during the calibration of the apparatus and the determination of the melting point of the substance to be examined. The cylindrical cavity is parallel to the upper polished surface of the block and about 3 mm from it. The apparatus is calibrated using appropriate substances of known melting point.

Method. Heat the block at a suitably rapid rate to a temperature about 10 °C below the presumed melting temperature, then adjust the heating rate to about 1 °C/min. At regular intervals drop a few particles of powdered and, where appropriate, dried substance, prepared as for the capillary tube method, onto the block in the vicinity of the thermometer bulb, cleaning the surface after each test. Record the temperature t_1 at which the substance melts instantaneously for the first time in contact with the metal. Stop the heating. During cooling drop a few particles of the substance at regular intervals on the block, cleaning the surface after each test. Record the temperature t_2 at which the substance ceases to melt instantaneously when it comes in contact with the metal.

Calibration of the apparatus. The apparatus may be calibrated using melting point reference substances such as those of the World Health Organization or other appropriate substances.

01/2008:20217

2.2.17. DROP POINT

The drop point is the temperature at which the first drop of the melting substance to be examined falls from a cup under defined conditions.

When a monograph does not specify the method to be used, method A is applied. Any change from method A to method B is validated.

METHOD A

Apparatus. The apparatus (see Figure 2.2.17.-1) consists of 2 metal sheaths (*A* and *B*) screwed together. Sheath *A* is fixed to a mercury thermometer. A metal cup is loosely fixed to the lower part of sheath *B* by means of 2 tightening bands. Fixed supports 2 mm long determine the exact position of the cup, and in addition are used to centre the thermometer. A hole pierced in the wall of sheath *B* is used to balance the pressure. The draining surface of the cup must be flat and the edges of the outflow orifice must be at right angles to it. The lower part of the mercury thermometer has the form and size shown in the figure; it covers a range from 0 °C to 110 °C and on its scale a distance of 1 mm represents a difference of 1 °C. The mercury reservoir of the thermometer has a diameter of 3.5 ± 0.2 mm and a height of 6.0 ± 0.3 mm. The apparatus is placed in the axis of a test-tube about 200 mm long and

with an external diameter of about 40 mm. It is fixed to the test-tube by means of a laterally grooved stopper through which the thermometer passes. The opening of the cup is placed about 15 mm from the bottom of the test-tube. The whole device is immersed in a beaker with a capacity of about 1 L, filled with water. The bottom of the test-tube is placed about 25 mm from the bottom of the beaker. The water level reaches the upper part of sheath *A*. A stirrer is used to ensure that the temperature of the water remains uniform.

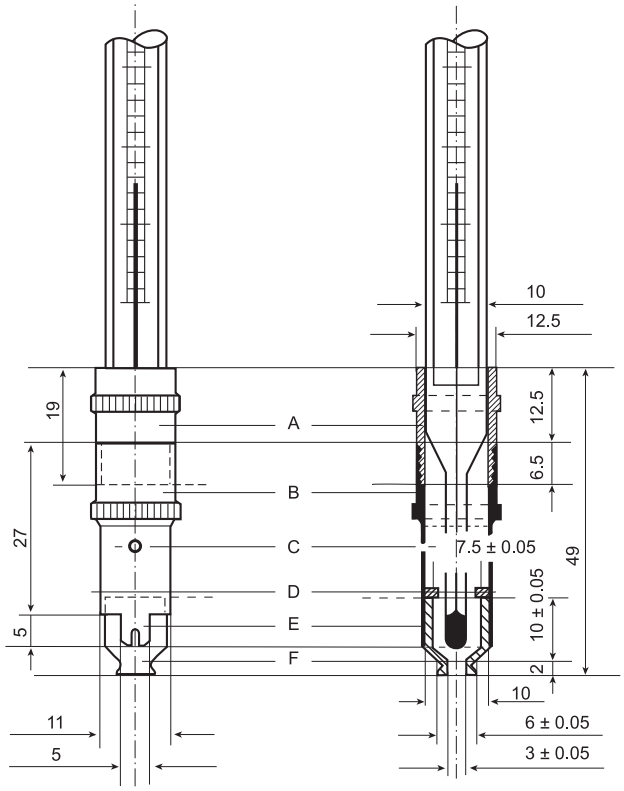

A. upper metal sheath	D. fixed supports
B. lower metal sheath	E. tightening bands
C. pressure-balancing hole	F. metal sample cup

Figure 2.2.17.-1. – *Apparatus for the determination of drop point*

Dimensions in millimetres

Method. Prepare the substance to be examined according to the prescriptions of the monograph. Fill the cup to the brim with the substance to be examined. Remove the excess substance at the 2 ends of the cup with a spatula. When sheaths *A* and *B* have been assembled, press the cup into its housing in sheath *B* until it touches the supports. Remove with a spatula the substance pushed out by the thermometer. Place the apparatus in the water-bath as described above. Heat the water-bath and, when the temperature is at about 10 °C below the presumed drop point, adjust the heating rate to about 1 °C/min. Note the temperature at the fall of the first drop. Carry out at least 3 determinations, each time with a fresh sample of the substance. The difference between the readings must not exceed 3 °C. The mean of 3 readings is the drop point of the substance.

METHOD B - AUTOMATED METHOD

Apparatus. The apparatus (see Figure 2.2.17.-2) consists of a cartridge assembly comprising a cup holder into which the sample cup containing the sample is loosely fixed, and a collector sleeve with a horizontal light slit, which is fixed below the cup. This assembly is placed in a heating block. The block is a metal cylinder with a cylindrical hole along its vertical axis into which the cartridge assembly is placed. There is another, narrower cylindrical vertical hole in which a temperature sensor sits. This is positioned level with the sample cup. The heating block is surrounded by an electrical heating element. Below the heating block a lamp is mounted such that a beam of light shines through the light slit in the collector sleeve, and onto a photo-sensor mounted opposite. The heating block is capable of being maintained at a precise, pre-defined temperature by the heating element, and of being heated at a slow and steady, pre-defined rate after an initial isothermal period.

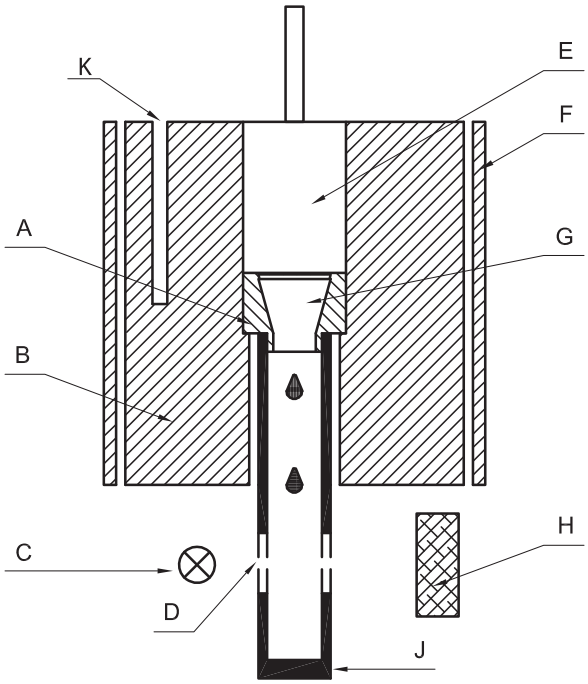

A. cup holder	F. heating element
B. heating block	G. sample cup
C. light source	H. photo-sensor
D. light slit	J. collector sleeve
E. cartridge assembly	K. temperature probe

Figure 2.2.17.-2. – *Example of automated drop point apparatus*

Method. Melt the substance to be examined and introduce it into the sample cup according to the prescriptions of the monograph, then proceed as follows or according to the manufacturer's instructions. Remove the excess substance at the 2 ends of the cup with a spatula. Condition the sample at the temperature and for the time prescribed in the monograph before making the measurement. Press the cup into the cup holder, and then press the collector sleeve onto the cup. Place the cartridge assembly in the heating block. Set the instrument to the initial isothermal conditions and rate for subsequent heating as described in the monograph of the substance to be examined. Start the temperature programme. When the first drop of molten sample falls through the hole at the bottom of the sample cup, interrupting the light beam, the signal from the photo-sensor causes the temperature of the heating block to be recorded automatically.

Calibration. Use the apparatus according to the manufacturer's instructions and carry out the prescribed calibrations and system performance tests at regular intervals, depending on the use of the apparatus and the substances to be examined. Benzoic acid and benzophenone are usually used as certified reference materials. Other materials may be used provided they show no polymorphism. Proceed as follows or according to the manufacturer's instructions. Prepare 3 sample cups for each of the 2 certified reference materials. Place the sample cups on a clean surface. Into each sample cup, introduce a small quantity of the sample and press it down with a

rod (diameter about 4.5 mm). Check that the opening is completely filled. Fill the sample cup about half full and compact the sample with a rod (diameter about 9 mm). Fill the sample cup completely and compact, adding more sample and compacting again if necessary, until the sample cup is completely full.

Temperature programme for benzoic acid: start temperature = 118.0 °C; heating rate = 0.2 °C/min; end temperature = 126.0 °C. After inserting the cup at 118 °C, a waiting time of 30 s is set before heating starts.

Temperature programme for benzophenone: start temperature = 44.0 °C; heating rate = 0.2 °C/min; end temperature = 56.0 °C. After inserting the cup at 44 °C, a waiting time of 30 s is set before heating starts.

Check the 3 single results: the test is valid if the 3 results are within 0.3 °C of the mean value.

Calculate the corrected mean temperature $(T)_2$ using the following expression:

$$T_1 - F$$

T_1 = mean drop point temperature of 3 samples, in °C;

F = compensation for the difference in temperature between the sample and the point in the heating block where the temperature is measured; this will vary depending upon the design of the automatic drop point instrument and is provided by the manufacturer.

Taking into account the drop point (T_0) of the certified reference material, the accuracy of the temperature scale is satisfactory if $|T_2 - T_0|$ is not greater than 0.3 °C.

01/2008:20218

2.2.18. FREEZING POINT

The freezing point is the maximum temperature occurring during the solidification of a supercooled liquid.

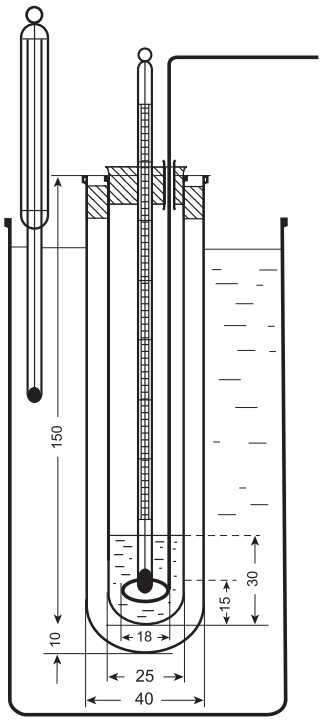

Figure 2.2.18.-1. – *Apparatus for the determination of freezing point*
Dimensions in millimetres

Apparatus. The apparatus (see Figure 2.2.18.-1) consists of a test-tube about 25 mm in diameter and 150 mm long placed inside a test-tube about 40 mm in diameter and 160 mm long. The inner tube is closed by a stopper which carries a thermometer about 175 mm long and graduated in 0.2 °C fixed so that the bulb is about 15 mm above the bottom of the tube. The stopper has a hole allowing the passage of the stem of a stirrer made from a glass rod or other suitable material formed at one end into a loop of about 18 mm overall diameter at right angles to the rod. The inner tube with its jacket is supported centrally in a 1 L beaker containing a suitable cooling liquid to within 20 mm of the top. A thermometer is supported in the cooling bath.

Method. Place in the inner tube sufficient quantity of the liquid or previously melted substance to be examined, to cover the thermometer bulb and determine the approximate freezing point by cooling rapidly. Place the inner tube in a bath about 5 °C above the approximate freezing point until all but the last traces of crystals are melted. Fill the beaker with water or a saturated solution of sodium chloride, at a temperature about 5 °C lower than the expected freezing point, insert the inner tube into the outer tube, ensuring that some seed crystals are present, and stir thoroughly until solidification takes place. Note the highest temperature observed during solidification.

01/2008:20219

2.2.19. AMPEROMETRIC TITRATION

In amperometric titration the end-point is determined by following the variation of the current measured between 2 electrodes (either one indicator electrode and one reference electrode or 2 indicator electrodes) immersed in the solution to be examined and maintained at a constant potential difference as a function of the quantity of titrant added.

The potential of the measuring electrode is sufficient to ensure a diffusion current for the electroactive substance.

Apparatus. The apparatus comprises an adjustable voltage source and a sensitive microammeter; the detection system generally consists of an indicator electrode (for example, a platinum electrode, a dropping-mercury electrode, a rotating-disc electrode or a carbon electrode) and a reference electrode (for example, a calomel electrode or a silver-silver chloride electrode).

A three-electrode apparatus is sometimes used, consisting of an indicator electrode, a reference electrode and a polarised auxiliary electrode.

Method. Set the potential of the indicator electrode as prescribed and plot a graph of the initial current and the values obtained during the titration as functions of the quantity of titrant added. Add the titrant in not fewer than 3 successive quantities equal to a total of about 80 per cent of the theoretical volume corresponding to the presumed equivalence point. The 3 values must fall on a straight line. Continue adding the titrant beyond the presumed equivalence point in not fewer than 3 successive quantities. The values obtained must fall on a straight line. The point of intersection of the 2 lines represents the end-point of the titration.

For amperometric titration with 2 indicator electrodes, the whole titration curve is recorded and used to determine the end-point.

07/2013:20220

2.2.20. POTENTIOMETRIC TITRATION

In a potentiometric titration the end-point of the titration is determined by following the variation of the potential difference between 2 electrodes (either one indicator electrode and one reference electrode or 2 indicator electrodes) immersed in the solution to be examined as a function of the quantity of titrant added.

The potential is usually measured at zero or practically zero current.

Apparatus. The apparatus used (a simple potentiometer or electronic device) comprises a voltmeter allowing readings to the nearest millivolt.

The indicator electrode to be used depends on the substance to be determined and may be a glass or metal electrode (for example, platinum, gold, silver or mercury). The reference electrode is generally a calomel or a silver-silver chloride electrode.

For acid-base titrations and unless otherwise prescribed, a glass-calomel or glass-silver-silver chloride electrode combination is used.

Method. In potentiometric titrations of weak acids or bases using non-aqueous solvents, either carry out a blank determination or pre-neutralise the solvent mixture, if necessary, before dissolution of the substance to be examined. Where it is impracticable to use potentiometric detection for this purpose, the solvent mixture can be pre-neutralised by titration using a suitable indicator. Some examples are given below:

Titrant	Indicator
Perchloric acid	*Crystal violet solution R*
Tetrabutylammonium hydroxide	3 g/L solution of *thymol blue R* in *methanol R*
Ethanolic sodium hydroxide	*Thymolphthalein solution R*

Plot a graph of the variation of potential difference as a function of the quantity of the titrant added, continuing the addition of the titrant beyond the presumed equivalence point. The end-point corresponds to a sharp variation of potential difference.

01/2008:20221

2.2.21. FLUORIMETRY

Fluorimetry is a procedure which uses the measurement of the intensity of the fluorescent light emitted by the substance to be examined in relation to that emitted by a given standard.

Method. Dissolve the substance to be examined in the solvent or mixture of solvents prescribed in the monograph, transfer the solution to the cell or the tube of the fluorimeter and illuminate it with an excitant light beam of the wavelength prescribed in the monograph and as near as possible monochromatic.

Measure the intensity of the emitted light at an angle of 90° to the excitant beam, after passing it through a filter which transmits predominantly light of the wavelength of the fluorescence. Other types of apparatus may be used provided that the results obtained are identical.

For quantitative determinations, first introduce into the apparatus the solvent or mixture of solvents used to dissolve the substance to be examined and set the instrument to zero. Introduce the standard solution and adjust the sensitivity of the instrument so that the reading is greater than 50. If the second adjustment is made by altering the width of the slits, a new zero setting must be made and the intensity of the standard must be measured again. Finally introduce the solution of unknown concentration and read the result on the instrument. Calculate the concentration c_x of the substance in the solution to be examined, using the formula:

$$c_x = \frac{I_x c_s}{I_s}$$

c_x = concentration of the solution to be examined,

c_s = concentration of the standard solution,

I_x = intensity of the light emitted by the solution to be examined,

I_s = intensity of the light emitted by the standard solution.

If the intensity of the fluorescence is not strictly proportional to the concentration, the measurement may be effected using a calibration curve.

In some cases, measurement can be made with reference to a fixed standard (for example a fluorescent glass or a solution of another fluorescent substance). In such cases, the concentration of the substance to be examined must be determined using a previously drawn calibration curve under the same conditions.

01/2008:20222

2.2.22. ATOMIC EMISSION SPECTROMETRY

GENERAL PRINCIPLE

Atomic emission is a process that occurs when electromagnetic radiation is emitted by excited atoms or ions. In atomic emission spectrometry the sample is subjected to temperatures high enough to cause not only dissociation into atoms, but also to cause significant amounts of collisional excitation and ionisation of the sample atoms to take place. Once the atoms and ions are in the excited states, they can decay to lower states through thermal or radiative (emission) energy transitions and electromagnetic radiation is emitted. An emission spectrum of an element contains several more lines than the corresponding absorption spectrum.

Atomic emission spectrometry is a technique for determining the concentration of an element in a sample by measuring the intensity of one of the emission lines of the atomic vapour of the element generated from the sample. The determination is carried out at the wavelength corresponding to this emission line.

In this chapter only atomisation in flame is dealt with. The method of inductively coupled plasma-atomic emission spectrometry (ICP-AES) is described in a different general chapter.

APPARATUS

This consists essentially of:

- a sample introduction and nebulisation system;
- a flame to generate the atoms to be determined;
- a monochromator;
- a detector;
- a data-acquisition unit.

Oxygen, air and a combustible gas such as hydrogen, acetylene, propane or butane may be used in flames. The atomisation source is critical, since it must provide sufficient energy to excite and atomise the atoms. The atomic spectra emitted from flames have the advantage of being simpler than those emitted from other sources, the main limitation being that the flames are not powerful enough to cause emission for many elements allowing their determination. Acidified water is the solvent of choice for preparing test and reference solutions, although organic solvents may also be used if precautions are taken to ensure that the solvent does not interfere with the stability of the flame.

INTERFERENCES

Spectral interference is reduced or eliminated by choosing an appropriate emission line for measurement or by adjusting the slit for spectral band-width. Physical interference is corrected

by diluting the sample solution, by matching the matrix or by using the method of standard additions. Chemical interference is reduced by using chemical modifiers or ionisation buffers.

MEMORY EFFECT

The memory effect caused by deposit of analyte in the apparatus may be limited by thoroughly rinsing between runs, diluting the solutions to be measured if possible and thus reducing their salt content, and by aspirating the solutions through as swiftly as possible.

METHOD

Use of plastic labware is recommended wherever possible.

Operate an atomic emission spectrometer in accordance with the manufacturer's instructions at the prescribed wavelength. Optimise the experimental conditions (flame temperature, burner adjustment, use of an ionic buffer, concentration of solutions) for the specific element to be analysed and in respect of the sample matrix. Introduce a blank solution into the atomic generator and adjust the instrument reading to zero or to its blank value. Introduce the most concentrated reference solution and adjust the sensitivity to obtain a suitable reading.

It is preferable to use concentrations which fall within the linear part of the calibration curve. If this is not possible, the calibration plots may also be curved and are then to be applied with appropriate calibration software.

Determinations are made by comparison with reference solutions with known concentrations of the element to be determined either by the method of direct calibration (Method I) or the method of standard additions (Method II).

METHOD I - DIRECT CALIBRATION

For routine measurements 3 reference solutions of the element to be determined and a blank are prepared and examined.

Prepare the solution of the substance to be examined (test solution) as prescribed in the monograph. Prepare not fewer than 3 reference solutions of the element to be determined, the concentrations of which span the expected value in the test solution. For assay purposes, optimal calibration levels are between 0.7 and 1.3 times the expected content of the element to be determined or the limit prescribed in the monograph. For purity determination, calibration levels are between the limit of detection and 1.2 times the limit specified for the element to be determined. Any reagents used in the preparation of the test solution are added to the reference solutions and to the blank solution at the same concentration.

Introduce each of the solutions into the instrument using the same number of replicates for each solution, to obtain a steady reading.

Calculation. Prepare a calibration curve from the mean of the readings obtained with the reference solutions by plotting the means as a function of concentration. Determine the concentration of the element in the test solution from the curve obtained.

METHOD II - STANDARD ADDITIONS

Add to at least 3 similar volumetric flasks equal volumes of the solution of the substance to be examined (test solution) prepared as prescribed. Add to all but 1 of the flasks progressively larger volumes of a reference solution containing a known concentration of the element to be determined to produce a series of solutions containing steadily increasing concentrations of that element known to give responses in the linear part of the curve, if at all possible. Dilute the contents of each flask to volume with solvent.

Introduce each of the solutions into the instrument using the same number of replicates for each solution, to obtain a steady reading.

Calculation. Calculate the linear equation of the graph using a least-squares fit, and derive from it the concentration of the element to be determined in the test solution.

VALIDATION OF THE METHOD

Satisfactory performance of methods prescribed in monographs is verified at suitable time intervals.

LINEARITY

Prepare and analyse not fewer than 4 reference solutions over the calibration range and a blank solution. Perform not fewer than 5 replicates.

The calibration curve is calculated by least-square regression from all measured data. The regression curve, the means, the measured data and the confidence interval of the calibration curve are plotted. The operating method is valid when:

- the correlation coefficient is at least 0.99,
- the residuals of each calibration level are randomly distributed around the calibration curve.

Calculate the mean and relative standard deviation for the lowest and highest calibration level.

When the ratio of the estimated standard deviation of the lowest and the highest calibration level is less than 0.5 or greater than 2.0, a more precise estimation of the calibration curve may be obtained using weighted linear regression. Both linear and quadratic weighting functions are applied to the data to find the most appropriate weighting function to be employed. If the means compared to the calibration curve show a deviation from linearity, two-dimensional linear regression is used.

ACCURACY

Verify the accuracy preferably by using a certified reference material (CRM). Where this is not possible, perform a test for recovery.

Recovery. For assay determinations a recovery of 90 per cent to 110 per cent is to be obtained. For other determinations, for example for trace element determination, the test is not valid if recovery is outside of the range 80 per cent to 120 per cent at the theoretical value. Recovery may be determined on a suitable reference solution (matrix solution) which is spiked with a known quantity of analyte (middle concentration of the calibration range).

REPEATABILITY

The repeatability is not greater than 3 per cent for an assay and not greater than 5 per cent for an impurity test.

LIMIT OF QUANTIFICATION

Verify that the limit of quantification (for example, determined using the 10 σ approach) is below the value to be measured.

01/2008:20223

2.2.23. ATOMIC ABSORPTION SPECTROMETRY

GENERAL PRINCIPLE

Atomic absorption is a process that occurs when a ground state-atom absorbs electromagnetic radiation of a specific wavelength and is elevated to an excited state. The atoms in the ground state absorb energy at their resonant frequency and the electromagnetic radiation is attenuated due to resonance absorption. The energy absorption is virtually a direct function of the number of atoms present.

This chapter provides general information and defines the procedures used in element determinations by atomic absorption spectrometry, either atomisation by flame, by electrothermal vaporisation in a graphite furnace, by hydride generation or by cold vapour technique for mercury.

Atomic absorption spectrometry is a technique for determining the concentration of an element in a sample by measuring the absorption of electromagnetic radiation by the atomic vapour of the element generated from the sample. The determination is carried out at the wavelength of one of

the absorption (resonance) lines of the element concerned. The amount of radiation absorbed is, according to the Lambert-Beer law, proportional to the element concentration.

APPARATUS

This consists essentially of:

- a source of radiation;
- a sample introduction device;
- a sample atomiser;
- a monochromator or polychromator;
- a detector;
- a data-acquisition unit.

The apparatus is usually equipped with a background correction system. Hollow-cathode lamps and electrodeless discharge lamps (EDL) are used as radiation source. The emission of such lamps consists of a spectrum showing very narrow lines with half-width of about 0.002 nm of the element being determined.

There are 3 types of sample atomisers:

- Flame technique

  A flame atomiser is composed of a nebulisation system with a pneumatic aerosol production accessory, a gas-flow regulation and a burner. Fuel-oxidant mixtures are commonly used to produce a range of temperatures from about 2000 K to 3000 K. Fuel gases include propane, hydrogen and acetylene; air and nitrous oxide are used as oxidants. The configuration of the burner is adapted to the gases used and the gas flow is adjustable. Samples are nebulised, acidified water being the solvent of choice for preparing test and reference solutions. Organic solvents may also be used if precautions are taken to ensure that the solvent does not interfere with the stability of the flame.

- Electrothermal atomisation technique

  An electrothermal atomiser is generally composed of a graphite tube furnace and an electric power source. Electrothermal atomisation in a graphite tube furnace atomises the entire sample and retains the atomic vapour in the light path for an extended period. This improves the detection limit. Samples, liquid as well as solid, are introduced directly into the graphite tube furnace, which is heated in a programmed series of steps to dry the sample and remove major matrix components by pyrolysis and to then atomise all of the analyte. The furnace is cleaned using a final temperature higher than the atomisation temperature. The flow of an inert gas during the pyrolysis step in the graphite tube furnace allows a better performance of the subsequent atomisation process.

- Cold vapour and hydride technique

  The atomic vapour may also be generated outside the spectrometer. This is notably the case for the cold-vapour method for mercury or for certain hydride-forming elements such as arsenic, antimony, bismuth, selenium and tin. For mercury, atoms are generated by chemical reduction with stannous chloride or sodium borohydride and the atomic vapour is swept by a stream of an inert gas into a cold quartz cell mounted in the optical path of the instrument. Hydrides thus generated are swept by an inert gas into a heated cell in which they are dissociated into atoms.

INTERFERENCES

Chemical, physical, ionisation and spectral interferences are encountered in atomic absorption measurements. Chemical interference is compensated by addition of matrix modifiers, of releasing agents or by using high temperature produced by a nitrous oxide-acetylene flame; the use of specific ionisation buffers (for example, lanthanum and caesium) compensates for ionisation interference; by dilution of the sample, through the method of standard additions or by matrix matching, physical interference due to high salt content or viscosity is eliminated. Spectral interference results from the overlapping of resonance lines and can be avoided by using a different resonance line. The use of Zeeman background correction also compensates for spectral interference and interferences from molecular absorption, especially when using the electrothermal atomisation technique. The use of multi-element hollow-cathode lamps may also cause spectral interference. Specific or non-specific absorption is measured in a spectral range defined by the band-width selected by the monochromator (0.2-2 nm).

BACKGROUND CORRECTION

Scatter and background in the flame or the electrothermal atomisation technique increase the measured absorbance values. Background absorption covers a large range of wavelengths, whereas atomic absorption takes place in a very narrow wavelength range of about 0.005-0.02 nm. Background absorption can in principle be corrected by using a blank solution of exactly the same composition as the sample, but without the specific element to be determined, although this method is frequently impracticable. With the electrothermal atomisation technique the pyrolysis temperature is to be optimised to eliminate the matrix decomposition products causing background absorption. Background correction can also be made by using 2 different light sources, the hollow-cathode lamp that measures the total absorption (element + background) and a deuterium lamp with a continuum emission from which the background absorption is measured. Background is corrected by subtracting the deuterium lamp signal from the hollow-cathode lamp signal. This method is limited in the spectral range on account of the spectra emitted by a deuterium lamp from 190-400 nm. Background can also be measured by taking readings at a non-absorbing line near the resonance line and then subtracting the results from the measurement at the resonance line. Another method for the correction of background absorption is the Zeeman effect (based on the Zeeman splitting of the absorption line in a magnetic field). This is particularly useful when the background absorption shows fine structure. It permits an efficient background correction in the range of 185-900 nm.

CHOICE OF THE OPERATING CONDITIONS

After selecting the suitable wavelength and slit width for the specific element, the need for the following has to be ascertained:

- correction for non-specific background absorption,
- chemical modifiers or ionisation buffers to be added to the sample as well as to blank and reference solutions,
- dilution of the sample to minimise, for example, physical interferences,
- details of the temperature programme, preheating, drying, pyrolysis, atomisation, post-atomisation with ramp and hold times,
- inert gas flow,
- matrix modifiers for electrothermal atomisation (furnace),
- chemical reducing reagents for measurements of mercury or other hydride-forming elements along with cold vapour cell or heating cell temperature,
- specification of furnace design (tank, L'vov platform, etc).

METHOD

Use of plastic labware is recommended wherever possible. The preparation of the sample may require a dissolution, a digestion (mostly microwave-assisted), an ignition step or a combination thereof in order to clear up the sample matrix and/or to remove carbon-containing material. If operating in an open system, the ignition temperature should not exceed 600 °C, due to the volatility of some metals, unless otherwise stated in the monograph.

Operate an atomic absorption spectrometer in accordance with the manufacturer's instructions at the prescribed wavelength. Introduce a blank solution into the atomic generator and adjust the instrument reading so that it indicates maximum transmission. The blank value may be determined by using solvent to zero the apparatus. Introduce the most concentrated reference solution and adjust the sensitivity to obtain a maximum absorbance reading. Rinse in order to avoid contamination and memory effects. After completing the analysis, rinse with *water R* or acidified water.

If a solid sampling technique is applied, full details of the procedure are provided in the monograph.

Ensure that the concentrations to be determined fall preferably within the linear part of the calibration curve. If this is not possible, the calibration plots may also be curved and are then to be applied with appropriate calibration software.

Determinations are made by comparison with reference solutions with known concentrations of the element to be determined either by the method of direct calibration (Method I) or the method of standard additions (Method II).

METHOD I - DIRECT CALIBRATION

For routine measurements 3 reference solutions and a blank solution are prepared and examined.

Prepare the solution of the substance to be examined (test solution) as prescribed in the monograph. Prepare not fewer than 3 reference solutions of the element to be determined, the concentrations of which span the expected value in the test solution. For assay purposes, optimal calibration levels are between 0.7 and 1.3 times the expected content of the element to be determined or the limit prescribed in the monograph. For purity determination, calibration levels are the limit of detection and 1.2 times the limit specified for the element to be determined. Any reagents used in the preparation of the test solution are added to the reference and blank solutions at the same concentration.

Introduce each of the solutions into the instrument using the same number of replicates for each of the solutions to obtain a steady reading.

Calculation. Prepare a calibration curve from the mean of the readings obtained with the reference solutions by plotting the means as a function of concentration. Determine the concentration of the element in the test solution from the curve obtained.

METHOD II - STANDARD ADDITIONS

Add to at least 3 similar volumetric flasks equal volumes of the solution of the substance to be examined (test solution) prepared as prescribed. Add to all but 1 of the flasks progressively larger volumes of a reference solution containing a known concentration of the element to be determined to produce a series of solutions containing steadily increasing concentrations of that element known to give responses in the linear part of the curve, if possible. Dilute the contents of each flask to volume with solvent.

Introduce each of the solutions into the instrument, using the same number of replicates for each of the solutions, to obtain a steady reading.

Calculation. Calculate the linear equation of the graph using a least-squares fit and derive from it the concentration of the element to be determined in the test solution.

VALIDATION OF THE METHOD

Satisfactory performance of methods prescribed in monographs is verified at suitable time intervals.

LINEARITY

Prepare and analyse not fewer than 4 reference solutions over the calibration range and a blank solution. Perform not fewer than 5 replicates.

The calibration curve is calculated by least-square regression from all measured data. The regression curve, the means, the measured data and the confidence interval of the calibration curve are plotted. The operating method is valid when:

- the correlation coefficient is at least 0.99,
- the residuals of each calibration level are randomly distributed around the calibration curve.

Calculate the mean and relative standard deviation for the lowest and highest calibration level.

When the ratio of the estimated standard deviation of the lowest and the highest calibration level is less than 0.5 or greater than 2.0, a more precise estimation of the calibration curve may be obtained using weighted linear regression. Both linear and quadratic weighting functions are applied to the data to find the most appropriate weighting function to be employed. If the means compared to the calibration curve show a deviation from linearity, two-dimensional linear regression is used.

ACCURACY

Verify the accuracy preferably by using a certified reference material (CRM). Where this is not possible, perform a test for recovery.

Recovery. For assay determinations a recovery of 90 per cent to 110 per cent is to be obtained. For other determinations, for example, for trace element determination the test is not valid if recovery is outside of the range 80 per cent to 120 per cent at the theoretical value. Recovery may be determined on a suitable reference solution (matrix solution) which is spiked with a known quantity of analyte (middle concentration of the calibration range).

REPEATABILITY

The repeatability is not greater than 3 per cent for an assay and not greater than 5 per cent for an impurity test.

LIMIT OF QUANTIFICATION

Verify that the limit of quantification (for example, determined using the 10 σ approach) is below the value to be measured.

01/2008:20224

2.2.24. ABSORPTION SPECTROPHOTOMETRY, INFRARED

Infrared spectrophotometers are used for recording spectra in the region of 4000-650 cm^{-1} (2.5-15.4 µm) or in some cases down to 200 cm^{-1} (50 µm).

APPARATUS

Spectrophotometers for recording spectra consist of a suitable light source, monochromator or interferometer and detector.

Fourier transform spectrophotometers use polychromatic radiation and calculate the spectrum in the frequency domain from the original data by Fourier transformation. Spectrophotometers fitted with an optical system capable of producing monochromatic radiation in the measurement region may also be used. Normally the spectrum is given as a function of transmittance, the quotient of the intensity of the transmitted radiation and the incident radiation. It may also be given in absorbance.

The absorbance (A) is defined as the logarithm to base 10 of the reciprocal of the transmittance (T):

$$A = \log_{10}\left(\frac{1}{T}\right) = \log_{10}\left(\frac{I_0}{I}\right)$$

T = $\frac{I}{I_0}$,

I_0 = intensity of incident radiation,

I = intensity of transmitted radiation.

PREPARATION OF THE SAMPLE

FOR RECORDING BY TRANSMISSION OR ABSORPTION

Prepare the substance by one of the following methods.

Liquids. Examine a liquid either in the form of a film between 2 plates transparent to infrared radiation, or in a cell of suitable path length, also transparent to infrared radiation.

Liquids or solids in solution. Prepare a solution in a suitable solvent. Choose a concentration and a path length of the cell which give a satisfactory spectrum. Generally, good results are obtained with concentrations of 10-100 g/L for a path length of 0.5-0.1 mm. Absorption due to the solvent is compensated by placing in the reference beam a similar cell containing the solvent used. If an FT-IR instrument is used, the absorption is compensated by recording the spectra for the solvent and the sample successively. The solvent absorbance, corrected by a compensation factor, is subtracted using calculation software.

Solids. Examine solids dispersed in a suitable liquid (mull) or in a solid (halide disc), as appropriate. If prescribed in the monograph, make a film of a molten mass between 2 plates transparent to infrared radiation.

A. Mull

Triturate a small quantity of the substance to be examined with the minimum quantity of *liquid paraffin R* or other suitable liquid; 5-10 mg of the substance to be examined is usually sufficient to make an adequate mull using one drop of *liquid paraffin R*. Compress the mull between 2 plates transparent to infrared radiation.

B. Disc

Triturate 1-2 mg of the substance to be examined with 300-400 mg, unless otherwise specified, of finely powdered and dried *potassium bromide R* or *potassium chloride R*. These quantities are usually sufficient to give a disc of 10-15 mm diameter and a spectrum of suitable intensity. If the substance is a hydrochloride, it is recommended to use *potassium chloride R*. Carefully grind the mixture, spread it uniformly in a suitable die, and submit it to a pressure of about 800 MPa (8 t·cm^{-2}). For substances that are unstable under normal atmospheric conditions or are hygroscopic, the disc is pressed *in vacuo*. Several factors may cause the formation of faulty discs, such as insufficient or excessive grinding, humidity or other impurities in the dispersion medium or an insufficient reduction of particle size. A disc is rejected if visual examination shows lack of uniform transparency or when transmittance at about 2000 cm^{-1} (5 µm) in the absence of a specific absorption band is less than 60 per cent without compensation, unless otherwise prescribed.

Gases. Examine gases in a cell transparent to infrared radiation and having an optical path length of about 100 mm. Evacuate the cell and fill to the desired pressure through a stopcock or needle valve using a suitable gas transfer line between the cell and the container of the gas to be examined.

If necessary adjust the pressure in the cell to atmospheric pressure using a gas transparent to infrared radiation (for example *nitrogen R* and *argon R*). To avoid absorption interferences due to water, carbon dioxide or other atmospheric gases, place in the reference beam, if possible, an identical cell that is either evacuated or filled with the gas transparent to infrared radiation.

FOR RECORDING BY DIFFUSE REFLECTANCE

Solids. Triturate a mixture of the substance to be examined with finely powdered and dried *potassium bromide R* or *potassium chloride R*. Use a mixture containing approximately 5 per cent of the substance, unless otherwise specified. Grind the mixture, place it in a sample cup and examine the reflectance spectrum.

The spectrum of the sample in absorbance mode may be obtained after mathematical treatment of the spectra by the Kubelka-Munk function.

FOR RECORDING BY ATTENUATED TOTAL REFLECTION

Attenuated total reflection (including multiple reflection) involves light being reflected internally by a transmitting medium, typically for a number of reflections. However, several accessories exist where only one reflection occurs. Prepare the substance as follows. Place the substance to be examined in close contact with an internal reflection element (IRE) such as diamond, germanium, zinc selenide, thallium bromide-thallium iodide (KRS-5) or another suitable material of high refractive index. Ensure close and uniform contact between the substance and the whole crystal surface of the internal reflection element, either by applying pressure or by dissolving the substance in an appropriate solvent, then covering the IRE with the obtained solution and evaporating to dryness. Examine the attenuated total reflectance (ATR) spectrum.

IDENTIFICATION USING REFERENCE SUBSTANCES

Prepare the substance to be examined and the reference substance by the same procedure and record the spectra between 4000-650 cm^{-1} (2.5-15.4 µm) under the same operational conditions. The transmission minima (absorption maxima) in the spectrum obtained with the substance to be examined correspond in position and relative size to those in the spectrum obtained with the reference substance (*CRS*).

When the spectra recorded in the solid state show differences in the positions of the transmission minima (absorption maxima), treat the substance to be examined and the reference substance in the same manner so that they crystallise or are produced in the same form, or proceed as prescribed in the monograph, then record the spectra.

IDENTIFICATION USING REFERENCE SPECTRA

Control of resolution performance. For instruments having a monochromator, record the spectrum of a polystyrene film approximately 35 µm in thickness. The difference x (see Figure 2.2.24.-1) between the percentage transmittance at the transmission maximum A at 2870 cm^{-1} (3.48 µm) and that at the transmission minimum B at 2849.5 cm^{-1} (3.51 µm) must be greater than 18. The difference y between the percentage transmittance at the transmission maximum C at 1589 cm^{-1} (6.29 µm) and that at the transmission minimum D at 1583 cm^{-1} (6.32 µm) must be greater than 10.

For Fourier-transform instruments, use suitable instrument resolution with the appropriate apodisation prescribed by the manufacturer. The resolution is checked by suitable means, for example by recording the spectrum of a polystyrene film approximately 35 µm in thickness. The difference between the absorbances at the absorption minimum at 2870 cm^{-1} and the absorption maximum at 2849.5 cm^{-1} is greater than 0.33. The difference between the absorbances at the absorption

minimum at 1589 cm^{-1} and the absorption maximum at 1583 cm^{-1} is greater than 0.08.

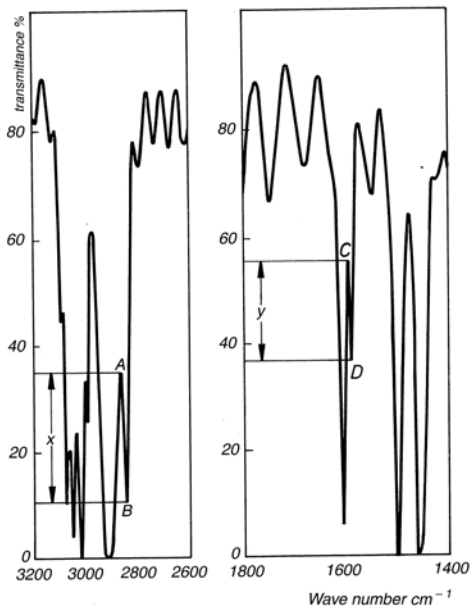

Figure 2.2.24.-1. – *Typical spectrum of polystyrene used to verify the resolution performance*

Verification of the wave-number scale. The wave-number scale may be verified using a polystyrene film, which has transmission minima (absorption maxima) at the wave numbers (in cm^{-1}) shown in Table 2.2.24.-1.

Table 2.2.24.-1. – *Transmission minima and acceptable tolerances of a polystyrene film*

Transmission minima (cm^{-1})	Acceptable tolerance (cm^{-1})	
	Monochromator instruments	Fourier-transform instruments
3060.0	± 1.5	± 1.0
2849.5	± 2.0	± 1.0
1942.9	± 1.5	± 1.0
1601.2	± 1.0	± 1.0
1583.0	± 1.0	± 1.0
1154.5	± 1.0	± 1.0
1028.3	± 1.0	± 1.0

Method. Prepare the substance to be examined according to the instructions accompanying the reference spectrum/reference substance. Using the operating conditions that were used to obtain the reference spectrum, which will usually be the same as those for verifying the resolution performance, record the spectrum of the substance to be examined.

The positions and the relative sizes of the bands in the spectrum of the substance to be examined and the reference spectrum are concordant in the 2 spectra.

Compensation for water vapour and atmospheric carbon dioxide. For Fourier-transform instruments, spectral interference from water vapour and carbon dioxide is compensated using suitable algorithms according to the manufacturer's instructions. Alternatively, spectra can be acquired using suitable purged instruments or ensuring that sample and background single beam spectra are acquired under exactly the same conditions.

IMPURITIES IN GASES

For the analysis of impurities, use a cell transparent to infrared radiation and of suitable optical path length (for example, 1-20 m). Fill the cell as prescribed under Gases. For detection and quantification of the impurities, proceed as prescribed in the monograph.

01/2008:20225

2.2.25. ABSORPTION SPECTROPHOTOMETRY, ULTRAVIOLET AND VISIBLE

Determination of absorbance. The absorbance (A) of a solution is defined as the logarithm to base 10 of the reciprocal of the transmittance (T) for monochromatic radiation:

$$A = \log_{10}\left(\frac{1}{T}\right) = \log_{10}\left(\frac{I_0}{I}\right)$$

T = I/I_0;

I_0 = intensity of incident monochromatic radiation;

I = intensity of transmitted monochromatic radiation.

In the absence of other physico-chemical factors, the absorbance (A) is proportional to the path length (b) through which the radiation passes and to the concentration (c) of the substance in solution in accordance with the equation:

$$A = \varepsilon c b$$

ε = molar absorptivity, if b is expressed in centimetres and c in moles per litre.

The expression $A_{1\,\mathrm{cm}}^{1\,\mathrm{per\,cent}}$ representing the specific absorbance of a dissolved substance refers to the absorbance of a 10 g/L solution in a 1 cm cell and measured at a defined wavelength so that:

$$A_{1\,\mathrm{cm}}^{1\,\mathrm{per\,cent}} = \frac{10\varepsilon}{M_\mathrm{r}}$$

Unless otherwise prescribed, measure the absorbance at the prescribed wavelength using a path length of 1 cm. Unless otherwise prescribed, the measurements are carried out with reference to the same solvent or the same mixture of solvents. The absorbance of the solvent measured against air and at the prescribed wavelength shall not exceed 0.4 and is preferably less than 0.2. Plot the absorption spectrum with absorbance or function of absorbance as ordinate against wavelength or function of wavelength as abscissa.

Where a monograph gives a single value for the position of an absorption maximum, it is understood that the value obtained may differ by not more than ± 2 nm.

Apparatus. Spectrophotometers suitable for measuring in the ultraviolet and visible range of the spectrum consist of an optical system capable of producing monochromatic radiation in the range of 200-800 nm and a device suitable for measuring the absorbance.

Control of wavelengths. Verify the wavelength scale using the absorption maxima of *holmium perchlorate solution R*, the line of a hydrogen or deuterium discharge lamp or the lines of a mercury vapour arc shown in Table 2.2.25.-1. The permitted

tolerance is ± 1 nm for the ultraviolet range and ± 3 nm for the visible range. Suitable certified reference materials may also be used.

Table 2.2.25.-1. – *Absorption maxima for control of wavelength scale*

241.15 nm (Ho)	404.66 nm (Hg)
253.7 nm (Hg)	435.83 nm (Hg)
287.15 nm (Ho)	486.0 nm (Dβ)
302.25 nm (Hg)	486.1 nm (Hβ)
313.16 nm (Hg)	536.3 nm (Ho)
334.15 nm (Hg)	546.07 nm (Hg)
361.5 nm (Ho)	576.96 nm (Hg)
365.48 nm (Hg)	579.07 nm (Hg)

Control of absorbance. Check the absorbance using suitable filters or a solution of *potassium dichromate R* at the wavelengths indicated in Table 2.2.25.-2, which gives for each wavelength the exact value and the permitted limits of the specific absorbance. The table is based on a tolerance for the absorbance of ± 0.01.

For the control of absorbance, use solutions of *potassium dichromate R* that has been previously dried to constant mass at 130 °C. For the control of absorbance at 235 nm, 257 nm, 313 nm and 350 nm, dissolve 57.0-63.0 mg of *potassium dichromate R* in *0.005 M sulfuric acid* and dilute to 1000.0 mL with the same acid. For the control of absorbance at 430 nm, dissolve 57.0-63.0 mg of *potassium dichromate R* in *0.005 M sulfuric acid* and dilute to 100.0 mL with the same acid. Suitable certified reference materials may also be used.

Table 2.2.25.-2

Wavelength (nm)	Specific absorbance $A_{1\,\mathrm{cm}}^{1\,\mathrm{per\,cent}}$	Maximum tolerance
235	124.5	122.9 to 126.2
257	144.5	142.8 to 146.2
313	48.6	47.0 to 50.3
350	107.3	105.6 to 109.0
430	15.9	15.7 to 16.1

Limit of stray light. Stray light may be detected at a given wavelength with suitable filters or solutions: for example, the absorbance of a 12 g/L solution of *potassium chloride R* in a 1 cm cell increases steeply between 220 nm and 200 nm and is greater than 2.0 at 198 nm when compared with water as compensation liquid. Suitable certified reference materials may also be used.

Resolution (for qualitative analysis). When prescribed in a monograph, measure the resolution of the apparatus as follows: record the spectrum of a 0.02 per cent *V/V* solution of *toluene R* in *hexane R*. The minimum ratio of the absorbance at the maximum at 269 nm to that at the minimum at 266 nm is stated in the monograph. Suitable certified reference materials may also be used.

Spectral slit-width (for quantitative analysis). To avoid errors due to spectral slit-width, when using an instrument on which the slit-width is variable at the selected wavelength, the slit-width must be small compared with the half-width of the absorption band but it must be as large as possible to obtain a high value of I_0. Therefore, a slit-width is chosen such that further reduction does not result in a change in absorbance reading.

Cells. The tolerance on the path length of the cells used is ± 0.005 cm. When filled with the same solvent, the cells intended to contain the solution to be examined and the compensation liquid must have the same transmittance. If this is not the case, an appropriate correction must be applied.

The cells must be cleaned and handled with care.

DERIVATIVE SPECTROPHOTOMETRY

Derivative spectrophotometry involves the transformation of absorption spectra (zero-order) into first-, second- or higher-order-derivative spectra.

A *first-order-derivative spectrum* is a plot of the gradient of the absorption curve (rate of change of the absorbance with wavelength, $dA/d\lambda$) against wavelength.

A *second-order-derivative spectrum* is a plot of the curvature of the absorption spectrum against wavelength ($d^2A/d\lambda^2$). The second-order-derivative spectrum at any wavelength λ is related to concentration by the following equation:

$$\frac{d^2A}{d\lambda^2} = \frac{d^2A_{1\,\mathrm{cm}}^{1\,\mathrm{per\,cent}}}{d\lambda^2} \times \frac{c'b}{10} = \frac{d^2A\varepsilon}{d\lambda^2} \times \frac{cb}{10}$$

c' = concentration of the absorbing solute, in grams per litre.

Apparatus. Use a spectrophotometer complying with the requirements prescribed above and equipped with an analogue resistance-capacitance differentiation module or a digital differentiator or other means of producing derivative spectra. Some methods of producing second-order-derivative spectra produce a wavelength shift relative to the zero-order spectrum and this is to be taken into account where applicable.

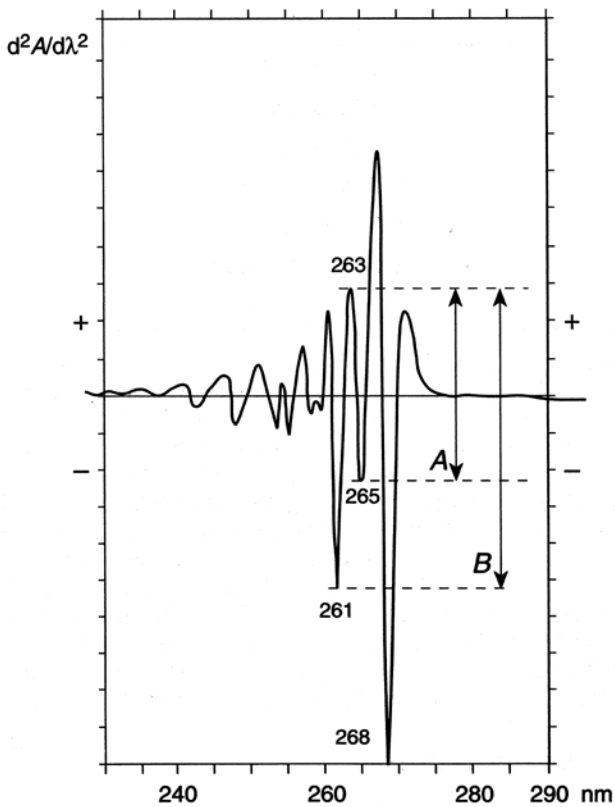

Figure 2.2.25.-1

Resolution power. When prescribed in a monograph, record the second-order-derivative spectrum of a 0.02 per cent *V/V* solution of *toluene R* in *methanol R*, using *methanol R* as the compensation liquid. The spectrum shows a small negative extremum located between 2 large negative extrema at 261 nm

and 268 nm, respectively, as shown in Figure 2.2.25.-1. Unless otherwise prescribed in the monograph, the ratio *A/B* (see Figure 2.2.25.-1) is not less than 0.2.

Procedure. Prepare the solution of the substance to be examined, adjust the various instrument settings according to the manufacturer's instructions, and calculate the amount of the substance to be determined as prescribed in the monograph.

01/2008:20226

2.2.26. PAPER CHROMATOGRAPHY

ASCENDING PAPER CHROMATOGRAPHY

Apparatus. The apparatus consists of a glass tank of suitable size for the chromatographic paper used, ground at the top to take a closely fitting lid. In the top of the tank is a device which suspends the chromatographic paper and is capable of being lowered without opening the chamber. In the bottom of the tank is a dish to contain the mobile phase into which the paper may be lowered. The chromatographic paper consists of suitable filter paper, cut into strips of sufficient length and not less than 2.5 cm wide; the paper is cut so that the mobile phase runs in the direction of the grain of the paper.

Method. Place in the dish a layer 2.5 cm deep of the mobile phase prescribed in the monograph. If prescribed in the monograph, pour the stationary phase between the walls of the tank and the dish. Close the tank and allow to stand for 24 h at 20 °C to 25 °C. Maintain the tank at this temperature throughout the subsequent procedure. Draw a fine pencil line horizontally across the paper 3 cm from one end. Using a micro pipette, apply to a spot on the pencil line the volume of the solution prescribed in the monograph. If the total volume to be applied would produce a spot more than 10 mm in diameter, apply the solution in portions allowing each to dry before the next application. When more than one chromatogram is to be run on the same strip of paper, space the solutions along the pencil line at points not less than 3 cm apart. Insert the paper into the tank, close the lid and allow to stand for 1 h 30 min. Lower the paper into the mobile phase and allow elution to proceed for the prescribed distance or time. Remove the paper from the tank and allow to dry in air. Protect the paper from bright light during the elution process.

DESCENDING PAPER CHROMATOGRAPHY

Apparatus. The apparatus consists of a glass tank of suitable size for the chromatographic paper used, ground at the top to take a closely fitting glass lid. The lid has a central hole about 1.5 cm in diameter closed by a heavy glass plate or a stopper. In the upper part of the tank is suspended a solvent trough with a device for holding the chromatographic paper. On each side of the trough, parallel to and slightly above its upper edges, are two glass guide rods to support the paper in such a manner that no part of it is in contact with the walls of the tank. The chromatographic paper consists of suitable filter paper, cut into strips of sufficient length, and of any convenient width between 2.5 cm and the length of the trough; the paper is cut so that the mobile phase runs in the direction of the grain of the paper.

Method. Place in the bottom of the tank a layer 2.5 cm deep of the solvent prescribed in the monograph, close the tank and allow to stand for 24 h at 20 °C to 25 °C. Maintain the tank at this temperature throughout the subsequent procedure. Draw a fine pencil line horizontally across the paper at such a distance from one end that when this end is secured in the solvent trough and the remainder of the paper is hanging freely over the guide rod, the line is a few centimetres below the guide rod and parallel with it. Using a micro-pipette, apply on the pencil line the volume of the solution prescribed in the monograph. If the total volume to be applied would produce a spot more than 10 mm in diameter, apply the solution in portions, allowing each to dry before the next application. When more than one chromatogram is to be run on the same strip of paper, space the solutions along the pencil line at points not less than 3 cm apart. Insert the paper in the tank, close the lid, and allow to stand for 1 h 30 min. Introduce into the solvent trough, through the hole in the lid, a sufficient quantity of the mobile phase, close the tank and allow elution to proceed for the prescribed distance or time. Remove the paper from the tank and allow to dry in air. The paper should be protected from bright light during the elution process.

01/2008:20227

2.2.27. THIN-LAYER CHROMATOGRAPHY

Thin-layer chromatography is a separation technique in which a stationary phase consisting of an appropriate material is spread in a uniform thin layer on a support (plate) of glass, metal or plastic. Solutions of analytes are deposited on the plate prior to development. The separation is based on adsorption, partition, ion-exchange or on combinations of these mechanisms and is carried out by migration (development) of solutes (solutions of analytes) in a solvent or a suitable mixture of solvents (mobile phase) through the thin-layer (stationary phase).

APPARATUS

Plates. The chromatography is carried out using pre-coated plates as described under *Reagents* (*4.1.1*).

Pre-treatment of the plates. It may be necessary to wash the plates prior to separation. This can be done by migration of an appropriate solvent. The plates may also be impregnated by procedures such as development, immersion or spraying. At the time of use, the plates may be activated, if necessary, by heating in an oven at 120 °C for 20 min.

Chromatographic tank with a flat bottom or twin trough, of inert, transparent material, of a size suitable for the plates used and provided with a tightly fitting lid. For horizontal development the tank is provided with a trough for the mobile phase and it additionally contains a device for directing the mobile phase to the stationary phase.

Micropipettes, microsyringes, calibrated disposable capillaries or other application devices suitable for the proper application of the solutions.

Fluorescence detection device to measure direct fluorescence or the inhibition of fluorescence.

Visualisation devices and reagents. Suitable devices are used for derivatisation to transfer to the plate reagents by spraying, immersion or exposure to vapour and, where applicable, to facilitate heating for visualisation of separated components.

Documentation. A device may be used to provide documentation of the visualised chromatogram, for example a photograph or a computer file.

METHOD

Sample application. Apply the prescribed volume of the solutions at a suitable distance from the lower edge and from the sides of the plate and on a line parallel to the lower edge; allow an interval of at least 10 mm (5 mm on high-performance plates) between the centres of circular spots and 5 mm (2 mm on high-performance plates) between the edges of bands. Apply the solutions in sufficiently small portions to obtain circular spots 2-5 mm in diameter (1-2 mm on high-performance plates) or bands 10-20 mm (5-10 mm on high-performance plates) by 1-2 mm.

In a monograph, where both normal and high-performance plates may be used, the working conditions for high-performance plates are given in the brackets [ ] after those for normal plates.

Vertical development. Line the walls of the chromatographic tank with filter paper. Pour into the chromatographic tank a sufficient quantity of the mobile phase for the size of the tank to give after impregnation of the filter paper a layer of appropriate depth related to the dimension of the plate to be used. For saturation of the chromatographic tank, replace the lid and allow to stand at 20-25 °C for 1 h. Unless otherwise indicated in the monograph, the chromatographic separation is performed in a saturated tank. Apply the prescribed volume of solutions as described above. When the solvent has evaporated from the applied solutions, place the plate in the chromatographic tank, ensuring that the plate is as vertical as possible and that the spots or bands are above the surface of the mobile phase. Close the chromatographic tank, maintain it at 20-25 °C and protect from sunlight. Remove the plate when the mobile phase has moved over the prescribed distance, measured between the points of application and the solvent front. Dry the plate and visualise the chromatograms as prescribed.

For two-dimensional chromatography, dry the plates after the first development and carry out a second development in a direction perpendicular to that of the first development.

Horizontal development. Apply the prescribed volume of the solutions as described above. When the solvent has evaporated from the applied solutions, introduce a sufficient quantity of the mobile phase into the trough of the chamber using a syringe or pipette, place the plate in the chamber after verifying that the latter is horizontal and connect the mobile phase direction device according to the manufacturer's instructions. If prescribed, develop the plate starting simultaneously at both ends. Close the chamber and maintain it at 20-25 °C. Remove the plate when the mobile phase has moved over the distance prescribed in the monograph. Dry the plate and visualise the chromatograms as prescribed.

For two-dimensional chromatography, dry the plates after the first development and carry out a second development in a direction perpendicular to that of the first development.

VISUAL EVALUATION

Identification. The principal spot in the chromatogram obtained with the test solution is visually compared to the corresponding spot in the chromatogram obtained with the reference solution by comparing the colour, the size and the retardation factor (R_F) of both spots.

The retardation factor (R_F) is defined as the ratio of the distance from the point of application to the centre of the spot and the distance travelled by the solvent front from the point of application.

Verification of the separating power for identification. Normally the performance given by the suitability test described in *Reagents* (*4.1.1*) is sufficient. Only in special cases an additional performance criterion is prescribed in the monograph.

Related substances test. The secondary spot(s) in the chromatogram obtained with the test solution is (are) visually compared to either the corresponding spot(s) in the chromatogram obtained with the reference solution containing the impurity(ies) or the spot in the chromatogram obtained with the reference solution prepared from a dilution of the test solution.

Verification of the separating power. The requirements for the verification of the separating power are prescribed in the monographs concerned.

Verification of the detecting power. The detecting power is satisfactory if a spot or band is clearly visible in the chromatogram obtained with the most dilute reference solution.

QUANTITATIVE MEASUREMENT

The requirements for resolution and separation are prescribed in the monographs concerned.

Substances separated by thin-layer chromatography and responding to UV-Vis irradiation can be determined directly on the plate, using appropriate instrumentation. While moving the plate or the measuring device, examine the plate by measuring the reflectance of the incident light. Similarly, fluorescence may be measured using an appropriate optical system. Substances containing radionuclides can be quantified in 3 ways: either directly by moving the plate alongside a suitable counter or vice versa (see *Radiopharmaceutical preparations (0125)*), by cutting the plates into strips and measuring the radioactivity on each individual strip using a suitable counter or by scraping off the stationary phase, dissolving it in a suitable scintillation cocktail and measuring the radioactivity using a liquid scintillation counter.

Apparatus. The apparatus for direct measurement on the plate consists of:

- a device for exact positioning and reproducible dispensing of the amount of substances onto the plate;
- a mechanical device to move the plate or the measuring device along the *x*-axis or the *y*-axis;
- a recorder and a suitable integrator or a computer;
- *for substances responding to UV-Vis irradiation*: a photometer with a source of light, an optical device able to generate monochromatic light and a photo cell of adequate sensitivity are used for the measurement of reflectance or transmittance; if fluorescence is measured, a suitable filter is required to prevent light used for excitation from reaching the detector while permitting emitted light or a specific portion thereof to pass;
- *for substances containing radionuclides*: a suitable counter for radioactivity. The linearity range of the counting device is to be verified.

Method. Prepare the solution of the substance to be examined (test solution) as prescribed in the monograph and, if necessary, prepare the reference solutions of the substance to be determined using the same solvent as in the test solution. Apply the same volume of each solution to the plate and develop.

Substances responding to UV-Vis irradiation. Prepare and apply not fewer than 3 reference solutions of the substance to be examined, the concentrations of which span the expected value in the test solution (about 80 per cent, 100 per cent and 120 per cent). Treat with the prescribed reagent, if necessary, and record the reflectance, the transmittance or fluorescence in the chromatograms obtained with the test and reference solutions. Use the measured results for the calculation of the amount of substance in the test solution.

Substances containing radionuclides. Prepare and apply a test solution containing about 100 per cent of the expected value. Determine the radioactivity as a function of the path length and report the radioactivity in each resulting peak as a percentage of the total amount of radioactivity.

Criteria for assessing the suitability of the system are described in the chapter on *Chromatographic separation techniques* (*2.2.46*). The extent to which adjustments of parameters of the chromatographic system can be made to satisfy the criteria of system suitability are also given in this chapter.

01/2008:20228

2.2.28. GAS CHROMATOGRAPHY

Gas chromatography (GC) is a chromatographic separation technique based on the difference in the distribution of species between two non-miscible phases in which the mobile phase is a carrier gas moving through or passing the stationary phase contained in a column. It is applicable to substances or their derivatives which are volatilised under the temperatures employed.

GC is based on mechanisms of adsorption, mass distribution or size exclusion.

APPARATUS

The apparatus consists of an injector, a chromatographic column contained in an oven, a detector and a data acquisition system (or an integrator or a chart recorder). The carrier gas flows through the column at a controlled rate or pressure and then through the detector.

The chromatography is carried out either at a constant temperature or according to a given temperature programme.

INJECTORS

Direct injections of solutions are the usual mode of injection, unless otherwise prescribed in the monograph. Injection may be carried out either directly at the head of the column using a syringe or an injection valve, or into a vaporisation chamber which may be equipped with a stream splitter.

Injections of vapour phase may be effected by static or dynamic head-space injection systems.

Dynamic head-space (purge and trap) injection systems include a sparging device by which volatile substances in solution are swept into an absorbent column maintained at a low temperature. Retained substances are then desorbed into the mobile phase by rapid heating of the absorbent column.

Static head-space injection systems include a thermostatically controlled sample heating chamber in which closed vials containing solid or liquid samples are placed for a fixed period of time to allow the volatile components of the sample to reach equilibrium between the non-gaseous phase and the vapour phase. After equilibrium has been established, a predetermined amount of the head-space of the vial is flushed into the gas chromatograph.

STATIONARY PHASES

Stationary phases are contained in columns which may be:

- a capillary column of fused-silica whose wall is coated with the stationary phase,
- a column packed with inert particles impregnated with the stationary phase,
- a column packed with solid stationary phase.

Capillary columns are 0.1 mm to 0.53 mm in internal diameter (Ø) and 5 m to 60 m in length. The liquid or stationary phase, which may be chemically bonded to the inner surface, is a film 0.1 µm to 5.0 µm thick.

Packed columns, made of glass or metal, are usually 1 m to 3 m in length with an internal diameter (Ø) of 2 mm to 4 mm. Stationary phases usually consist of porous polymers or solid supports impregnated with liquid phase.

Supports for analysis of polar compounds on columns packed with low-capacity, low-polarity stationary phase must be inert to avoid peak tailing. The reactivity of support materials can be reduced by silanising prior to coating with liquid phase. Acid-washed, flux-calcinated diatomaceous earth is often used. Materials are available in various particle sizes, the most commonly used particles are in the ranges of 150 µm to 180 µm and 125 µm to 150 µm.

MOBILE PHASES

Retention time and peak efficiency depend on the carrier gas flow rate; retention time is directly proportional to column length and resolution is proportional to the square root of the column length. For packed columns, the carrier gas flow rate is usually expressed in millilitres per minute at atmospheric pressure and room temperature. Flow rate is measured at the detector outlet, either with a calibrated mechanical device or with a bubble tube, while the column is at operating temperature. The linear velocity of the carrier gas through a packed column is inversely proportional to the square root of the internal diameter of the column for a given flow volume. Flow rates of 60 mL/min in a 4 mm internal diameter column and 15 mL/min in a 2 mm internal diameter column, give identical linear velocities and thus similar retention times.

Helium or nitrogen are usually employed as the carrier gas for packed columns, whereas commonly used carrier gases for capillary columns are nitrogen, helium and hydrogen.

DETECTORS

Flame-ionisation detectors are usually employed but additional detectors which may be used include: electron-capture, nitrogen-phosphorus, mass spectrometric, thermal conductivity, Fourier transform infrared spectrophotometric, and others, depending on the purpose of the analysis.

METHOD

Equilibrate the column, the injector and the detector at the temperatures and the gas flow rates specified in the monograph until a stable baseline is achieved. Prepare the test solution(s) and the reference solution(s) as prescribed. The solutions must be free from solid particles.

Criteria for assessing the suitability of the system are described in the chapter on *Chromatographic separation techniques* (*2.2.46*). The extent to which adjustments of parameters of the chromatographic system can be made to satisfy the criteria of system suitability are also given in this chapter.

Static head-space gas chromatography

Static head-space gas chromatography is a technique particularly suitable for separating and determining volatile compounds present in solid or liquid samples. The method is based on the analysis of the vapour phase in equilibrium with the solid or liquid phase.

APPARATUS

The apparatus consists of a gas chromatograph provided with a device for introducing the sample that may be connected to a module that automatically controls the pressure and the temperature. If necessary, a device for eliminating solvents can be added.

The sample to be analysed is introduced into a container fitted with a suitable stopper and a valve-system which permits the passage of the carrier gas. The container is placed in a thermostatically controlled chamber at a temperature set according to the substance to be examined.

The sample is held at this temperature long enough to allow equilibrium to be established between the solid or liquid phase and the vapour phase.

The carrier gas is introduced into the container and, after the prescribed time, a suitable valve is opened so that the gas expands towards the chromatographic column taking the volatilised compounds with it.

Instead of using a chromatograph specifically equipped for the introduction of samples, it is also possible to use airtight syringes and a conventional chromatograph. Equilibration is then carried out in a separate chamber and the vapour phase is carried onto the column, taking the precautions necessary to avoid any changes in the equilibrium.

METHOD

Using the reference preparations, determine suitable instrument settings to produce an adequate response.

DIRECT CALIBRATION

Separately introduce into identical containers the preparation to be examined and each of the reference preparations, as prescribed in the monograph, avoiding contact between the sampling device and the samples.

Close the containers hermetically and place in the thermostatically controlled chamber set to the temperature and pressure prescribed in the monograph; after equilibration, carry out the chromatography under the prescribed conditions.

STANDARD ADDITIONS

Add to a set of identical suitable containers equal volumes of the preparation to be examined. Add to all but one of the containers, suitable quantities of a reference preparation

containing a known concentration of the substance to be determined so as to produce a series of preparations containing steadily increasing concentrations of the substance.

Close the containers hermetically and place in the thermostatically controlled chamber set to the temperature and pressure prescribed in the monograph; after equilibration, carry out the chromatography under the prescribed conditions.

Calculate the linear equation of the graph using a least-squares fit, and derive from it the concentration of the substance to be determined in the preparation to be examined.

Alternatively, plot on a graph the mean of readings against the added quantity of the substance to be determined. Extrapolate the line joining the points on the graph until it meets the concentration axis. The distance between this point and the intersection of the axes represents the concentration of the substance to be determined in the preparation to be examined.

SUCCESSIVE WITHDRAWALS (MULTIPLE HEAD-SPACE EXTRACTION)

If prescribed, the successive withdrawal method is fully described in the monograph.

01/2008:20229

2.2.29. LIQUID CHROMATOGRAPHY

Liquid chromatography (LC) is a method of chromatographic separation based on the difference in the distribution of species between two non-miscible phases, in which the mobile phase is a liquid which percolates through a stationary phase contained in a column.

LC is mainly based on mechanisms of adsorption, mass distribution, ion exchange, size exclusion or stereochemical interaction.

APPARATUS

The apparatus consists of a pumping system, an injector, a chromatographic column (a column temperature controller may be used), a detector and a data acquisition system (or an integrator or a chart recorder). The mobile phase is supplied from one or several reservoirs and flows through the column, usually at a constant rate, and then through the detector.

PUMPING SYSTEMS

LC pumping systems are required to deliver the mobile phase at a constant flow rate. Pressure fluctuations are to be minimised, e.g. by passing the pressurised solvent through a pulse-dampening device. Tubing and connections are capable of withstanding the pressures developed by the pumping system. LC pumps may be fitted with a facility for "bleeding" the system of entrapped air bubbles.

Microprocessor controlled systems are capable of accurately delivering a mobile phase of either constant (isocratic elution) or varying composition (gradient elution), according to a defined programme. In the case of gradient elution, pumping systems which deliver solvent(s) from several reservoirs are available and solvent mixing can be achieved on either the low or high-pressure side of the pump(s).

INJECTORS

The sample solution is introduced into the flowing mobile phase at or near the head of the column using an injection system which can operate at high pressure. Fixed-loop and variable volume devices operated manually or by an auto-sampler are used. Manual partial filling of loops may lead to poorer injection volume precision.

STATIONARY PHASES

There are many types of stationary phases employed in LC, including:

- silica, alumina or porous graphite, used in normal-phase chromatography, where the separation is based on differences in adsorption and/or mass distribution,
- resins or polymers with acid or basic groups, used in ion-exchange chromatography, where separation is based on competition between the ions to be separated and those in the mobile phase,
- porous silica or polymers, used in size-exclusion chromatography, where separation is based on differences between the volumes of the molecules, corresponding to steric exclusion,
- a variety of chemically modified supports prepared from polymers, silica or porous graphite, used in reversed-phase LC, where the separation is based principally on partition of the molecules between the mobile phase and the stationary phase,
- special chemically modified stationary phases, e.g. cellulose or amylose derivatives, proteins or peptides, cyclodextrins etc., for the separation of enantiomers (chiral chromatography).

Most separations are based upon partition mechanisms utilising chemically modified silica as the stationary phase and polar solvents as the mobile phase. The surface of the support, e.g. the silanol groups of silica, is reacted with various silane reagents to produce covalently bound silyl derivatives covering a varying number of active sites on the surface of the support. The nature of the bonded phase is an important parameter for determining the separation properties of the chromatographic system.

Commonly used bonded phases are shown below:

octyl	= Si-$[CH_2]_7$-CH_3	C_8
octadecyl	= Si-$[CH_2]_{17}$-CH_3	C_{18}
phenyl	= Si-$[CH_2]_n$-C_6H_5	C_6H_5
cyanopropyl	= Si-$[CH_2]_3$-CN	CN
aminopropyl	= Si-$[CH_2]_3$-NH_2	NH_2
diol	= Si-$[CH_2]_3$-O-CH(OH)-CH_2-OH	

Unless otherwise stated by the manufacturer, silica based reversed-phase columns are considered to be stable in mobile phases having an apparent pH in the range 2.0 to 8.0. Columns containing porous graphite or particles of polymeric materials such as styrene-divinylbenzene copolymer are stable over a wider pH range.

Analysis using normal-phase chromatography with unmodified silica, porous graphite or polar chemically modified silica, e.g. cyanopropyl or diol, as the stationary phase with a non-polar mobile phase is applicable in certain cases.

For analytical separations, the particle size of the most commonly used stationary phases varies between 3 µm and 10 µm. The particles may be spherical or irregular, of varying porosity and specific surface area. These parameters contribute to the chromatographic behaviour of a particular stationary phase. In the case of reversed phases, the nature of the stationary phase, the extent of bonding, e.g. expressed as the carbon loading, and whether the stationary phase is end-capped (i.e. residual silanol groups are silylated) are additional determining factors. Tailing of peaks, particularly of basic substances, can occur when residual silanol groups are present.

Columns, made of stainless steel unless otherwise prescribed in the monograph, of varying length and internal diameter (Ø) are used for analytical chromatography. Columns with internal diameters of less than 2 mm are often referred to as microbore columns. The temperature of the mobile phase and the column must be kept constant during an analysis. Most separations are performed at room temperature, but columns may be heated to give higher efficiency. It is recommended that columns not be heated above 60 °C because of the potential for stationary phase degradation or changes occurring to the composition of the mobile phase.

MOBILE PHASES

For normal-phase chromatography, less polar solvents are employed. The presence of water in the mobile phase is to be strictly controlled to obtain reproducible results. In reversed-phase LC, aqueous mobile phases, with or without organic modifiers, are employed.

Components of the mobile phase are usually filtered to remove particles greater than 0.45 µm. Multicomponent mobile phases are prepared by measuring the required volumes (unless masses are specified) of the individual components, followed by mixing. Alternatively, the solvents may be delivered by individual pumps controlled by proportioning valves by which mixing is performed according to the desired proportion. Solvents are normally degassed before pumping by sparging with helium, sonication or using on-line membrane/vacuum modules to avoid the creation of gas bubbles in the detector cell.

Solvents for the preparation of the mobile phase are normally free of stabilisers and are transparent at the wavelength of detection, if an ultraviolet detector is employed. Solvents and other components employed are to be of appropriate quality. Adjustment of the pH, if necessary, is effected using only the aqueous component of the mobile phase and not the mixture. If buffer solutions are used, adequate rinsing of the system is carried out with a mixture of water and the organic modifier of the mobile phase (5 per cent *V/V*) to prevent crystallisation of salts after completion of the chromatography.

Mobile phases may contain other components, e.g. a counter-ion for ion-pair chromatography or a chiral selector for chromatography using an achiral stationary phase.

DETECTORS

Ultraviolet/visible (UV/Vis) spectrophotometers, including diode array detectors, are the most commonly employed detectors. Fluorescence spectrophotometers, differential refractometers, electrochemical detectors, mass spectrometers, light scattering detectors, radioactivity detectors or other special detectors may also be used.

METHOD

Equilibrate the column with the prescribed mobile phase and flow rate, at room temperature or at the temperature specified in the monograph, until a stable baseline is achieved. Prepare the solution(s) of the substance to be examined and the reference solution(s) required. The solutions must be free from solid particles.

Criteria for assessing the suitability of the system are described in the chapter on *Chromatographic separation techniques* (*2.2.46*). The extent to which adjustments of parameters of the chromatographic system can be made to satisfy the criteria of system suitability are also given in this chapter.

01/2008:20230

2.2.30. SIZE-EXCLUSION CHROMATOGRAPHY

Size-exclusion chromatography is a chromatographic technique which separates molecules in solution according to their size. With organic mobile phases, the technique is known as *gel-permeation chromatography* and with aqueous mobile phases, the term *gel-filtration chromatography* has been used. The sample is introduced into a column, which is filled with a gel or a porous particle packing material, and is carried by the mobile phase through the column. The size separation takes place by repeated exchange of the solute molecules between the solvent of the mobile phase and the same solvent in the stagnant liquid phase (stationary phase) within the pores of the packing material. The pore-size range of the packing material determines the molecular-size range within which separation can occur.

Molecules small enough to penetrate all the pore spaces elute at the *total permeation volume* (V_t). On the other hand, molecules apparently larger than the maximum pore size of the packing material migrate along the column only through the spaces between the particles of the packing material without being retained and elute at the *exclusion volume* (V_0 void volume). Separation according to molecular size occurs between the exclusion volume and the total permeation volume, with useful separation usually occurring in the first two thirds of this range.

Apparatus. The apparatus consists essentially of a chromatographic column of varying length and internal diameter (Ø), if necessary temperature-controlled, packed with a separation material that is capable of fractionation in the appropriate range of molecular sizes and through which the eluent is passed at a constant rate. One end of the column is usually fitted with a suitable device for applying the sample such as a flow adapter, a syringe through a septum or an injection valve and may also be connected to a suitable pump for controlling the flow of the eluent. Alternatively the sample may be applied directly to the drained bed surface or, where the sample is denser than the eluent, it may be layered beneath the eluent. The outlet of the column is usually connected to a suitable detector fitted with an automatic recorder which enables the monitoring of the relative concentrations of separated components of the sample. Detectors are usually based on photometric, refractometric or luminescent properties. An automatic fraction collector may be attached, if necessary.

The packing material may be a soft support such as a swollen gel or a rigid support composed of a material such as glass, silica or a solvent-compatible, cross-linked organic polymer. Rigid supports usually require pressurised systems giving faster separations. The mobile phase is chosen according to sample type, separation medium and method of detection. Before carrying out the separation, the packing material is treated, and the column is packed, as described in the monograph, or according to the manufacturer's instructions.

Criteria for assessing the suitability of the system are described in the chapter on *Chromatographic separation techniques* (*2.2.46*). The extent to which adjustments of parameters of the chromatographic system can be made to satisfy the criteria of system suitability are also given in this chapter.

DETERMINATION OF RELATIVE COMPONENT COMPOSITION OF MIXTURES

Carry out the separation as stated in the monograph. If possible, monitor the elution of the components continuously and measure the corresponding peak areas. If the sample is monitored by a physico-chemical property to which all the components of interest exhibit equivalent responses (for example if they have the same specific absorbance), calculate the relative amount of each component by dividing the respective peak area by the sum of the peak areas of all the components of interest. If the responses to the property used for detection of the components of interest are not equivalent, calculate the content by means of calibration curves obtained with the calibration standards prescribed in the monograph.

DETERMINATION OF MOLECULAR MASSES

Size-exclusion chromatography may be used to determine molecular masses by comparison with appropriate calibration standards specified in the monograph. The retention volumes of the calibration standards may be plotted against the logarithm of their molecular masses. The plot usually approximates a straight line within the exclusion and total permeation limits for the separation medium used. From the calibration curve, molecular masses may be estimated. The molecular-mass calibration is valid only for the particular macromolecular solute/solvent system used under the specified experimental conditions.

DETERMINATION OF MOLECULAR SIZE DISTRIBUTION OF POLYMERS

Size-exclusion chromatography may be used to determine the distribution of the molecular size of polymers. However, sample comparison may be valid only for results obtained under the same experimental conditions. The reference substances used for the calibration and the methods for determination of the distribution of molecular sizes of polymers are specified in the monograph.

01/2010:20231

2.2.31. ELECTROPHORESIS[2]

♦GENERAL PRINCIPLE

Under the influence of an electrical field, charged particles dissolved or dispersed in an electrolyte solution migrate in the direction of the electrode bearing the opposite polarity. In gel electrophoresis, the movements of the particles are retarded by interactions with the surrounding gel matrix, which acts as a molecular sieve. The opposing interactions of the electrical force and molecular sieving result in differential migration rates according to sizes, shapes and charges of particles. Because of their different physico-chemical properties, different macromolecules of a mixture will migrate at different speeds during electrophoresis and will thus be separated into discrete fractions. Electrophoretic separations can be conducted in systems without support phases (e.g. free solution separation in capillary electrophoresis) and in stabilising media such as thin-layer plates, films or gels.

FREE OR MOVING BOUNDARY ELECTROPHORESIS

This method is mainly used for the determination of mobility, the experimental characteristics being directly measurable and reproducible. It is chiefly employed with substances of high relative molecular mass and low diffusibility. The boundaries are initially located by a physical process such as refractometry or conductimetry. After applying a given electric field for an accurately measured time, the new boundaries and their respective positions are observed. The operating conditions must be such as to make it possible to determine as many boundaries as there are components.

ZONE ELECTROPHORESIS USING A SUPPORTING MEDIUM

This method requires the use of small samples only.

The nature of the support, such as paper, agar gel, cellulose acetate, starch, agarose, methacrylamide, mixed gel, introduces a number of additional factors modifying the mobility:

a) owing to channelling in the supporting medium, the apparent distance covered is less than the real distance,

b) some supporting media are not electrically neutral. As the medium is a stationary phase it may sometimes give rise to a considerable electro-endosmotic flow,

c) any heating due to the joule effect may cause some evaporation of the liquid from the supporting medium which, by capillarity, causes the solution to move from the ends towards the centre. The ionic strength therefore tends to increase gradually.

The rate of migration then depends on four main factors: the mobility of the charged particle, the electro-endosmotic flow, the evaporation flow, and the field strength. Hence it is necessary to operate under clearly defined experimental conditions and to use, wherever possible, reference substances.

An *apparatus* for electrophoresis consists of:

- a *generator supplying direct current* whose voltage can be controlled and, preferably, stabilised,
- an *electrophoresis chamber*. This is usually rectangular and made of glass or rigid plastic, with two separate compartments, the anodic and the cathodic, containing the electrolyte solution. In each compartment is immersed an electrode, for example of platinum or graphite. These are connected by means of an appropriately isolated circuit to the corresponding terminal of the power supply to form the anode and the cathode. The level of the liquid in the two compartments is kept equal to prevent siphoning.

  The electrophoresis chamber is fitted with an airtight lid which maintains a moisture-saturated atmosphere during operation and reduces evaporation of the solvent. A safety device may be used to cut off the power when the lid is removed. If the electrical power measured across the strip exceeds 10 W, it is preferable to cool the support.
- a *support-carrying device*:

  Strip electrophoresis. The supporting strip, previously wetted with the same conducting solution and dipped at each end into an electrode compartment is appropriately tightened and fixed on to a suitable carrier designed to prevent diffusion of the conducting electrolyte, such as a horizontal frame, inverted-V stand or a uniform surface with contact points at suitable intervals.

  Gel electrophoresis. The device consists essentially of a glass plate (for example, a microscope slide) over the whole surface of which is deposited a firmly adhering layer of gel of uniform thickness. The connection between the gel and the conducting solution is effected in various ways according to the type of apparatus used. Precautions must be taken to avoid condensation of moisture or drying of the solid layer.
- measuring *device or means of detection*.

Method. Introduce the electrolyte solution into the electrode compartments. Place the support suitably impregnated with electrolyte solution in the chamber under the conditions prescribed for the type of apparatus used. Locate the starting line and apply the sample. Apply the electric current for the prescribed time. After the current has been switched off, remove the support from the chamber, dry and visualise.

POLYACRYLAMIDE ROD GEL ELECTROPHORESIS

In polyacrylamide rod gel electrophoresis, the stationary phase is a gel which is prepared from a mixture of acrylamide and *N,N′*-methylenebisacrylamide. Rod gels are prepared in tubes 7.5 cm long and 0.5 cm in internal diameter, one solution being applied to each rod.

Apparatus. This consists of two buffer solution reservoirs made of suitable material such as poly(methyl methacrylate) and mounted vertically one above the other. Each reservoir is fitted with a platinum electrode. The electrodes are connected to a power supply allowing operation either at constant current or at constant voltage. The apparatus has in the base of the upper reservoir a number of holders equidistant from the electrode.

Method. The solutions should usually be degassed before polymerisation and the gels used immediately after preparation. Prepare the gel mixture as prescribed and pour into suitable glass tubes, stoppered at the bottom, to an equal height in each tube and to about 1 cm from the top, taking care to ensure that no air bubbles are trapped in the tubes. Cover the gel mixture with a layer of *water R* to exclude air and allow to set. Gel formation usually takes about 30 min and is complete when a sharp interface appears between the gel and the water layer. Remove the water layer. Fill the lower reservoir with the prescribed buffer solution and remove the stoppers from the tubes. Fit the tubes into the holders of the upper reservoir and adjust so that the bottom of the tubes are immersed in the buffer solution in the lower reservoir. Carefully fill the tubes with the prescribed buffer solution.

(2) This chapter has undergone pharmacopoeial harmonisation. See chapter *5.8. Pharmacopoeial harmonisation*.

Prepare the test and reference solutions containing the prescribed marker dye and make them dense by dissolving in them *sucrose R*, for example. Apply the solutions to the surface of a gel using a different tube for each solution. Add the same buffer to the upper reservoir. Connect the electrodes to the power supply and allow electrophoresis to proceed at the prescribed temperature and using the prescribed constant voltage or current. Switch off the power supply when the marker dye has migrated almost into the lower reservoir. Immediately remove each tube from the apparatus and extrude the gel. Locate the position of the bands in the electropherogram as prescribed.♦

SODIUM DODECYL SULFATE POLYACRYLAMIDE GEL ELECTROPHORESIS (SDS-PAGE)

Scope. Polyacrylamide gel electrophoresis is used for the qualitative characterisation of proteins in biological preparations, for control of purity and quantitative determinations.

Purpose. Analytical gel electrophoresis is an appropriate method with which to identify and to assess the homogeneity of proteins in pharmaceutical preparations. The method is routinely used for the estimation of protein subunit molecular masses and for determining the subunit compositions of purified proteins.

Ready-to-use gels and reagents are widely available on the market and can be used instead of those described in this text, provided that they give equivalent results and that they meet the validity requirements given below under Validation of the test.

CHARACTERISTICS OF POLYACRYLAMIDE GELS

The sieving properties of polyacrylamide gels are established by the three-dimensional network of fibres and pores which is formed as the bifunctional bisacrylamide cross-links adjacent polyacrylamide chains. Polymerisation is catalysed by a free radical-generating system composed of ammonium persulfate and tetramethylethylenediamine.

As the acrylamide concentration of a gel increases, its effective pore size decreases. The effective pore size of a gel is operationally defined by its sieving properties; that is, by the resistance it imparts to the migration of macromolecules. There are limits on the acrylamide concentrations that can be used. At high acrylamide concentrations, gels break much more easily and are difficult to handle. As the pore size of a gel decreases, the migration rate of a protein through the gel decreases. By adjusting the pore size of a gel, through manipulating the acrylamide concentration, the resolution of the method can be optimised for a given protein product. Thus, a given gel is physically characterised by its respective composition in acrylamide and bisacrylamide.

In addition to the composition of the gel, the state of the protein is an important component to the electrophoretic mobility. In the case of proteins, the electrophoretic mobility is dependent on the pK value of the charged groups and the size of the molecule. It is influenced by the type, concentration and pH of the buffer, by the temperature and the field strength as well as by the nature of the support material.

DENATURING POLYACRYLAMIDE GEL ELECTROPHORESIS

The method cited as an example is limited to the analysis of monomeric polypeptides with a mass range of 14 000 to 100 000 daltons. It is possible to extend this mass range by various techniques (e.g. gradient gels, particular buffer system) but those techniques are not discussed in this chapter.

Denaturing polyacrylamide gel electrophoresis using sodium dodecyl sulfate (SDS-PAGE) is the most common mode of electrophoresis used in assessing the pharmaceutical quality of protein products and will be the focus of the example method. Typically, analytical electrophoresis of proteins is carried out in polyacrylamide gels under conditions that ensure dissociation of the proteins into their individual polypeptide subunits and that minimise aggregation. Most commonly, the strongly anionic detergent sodium dodecyl sulfate (SDS) is used in combination with heat to dissociate the proteins before they are loaded on the gel. The denatured polypeptides bind to SDS, become negatively charged and exhibit a consistent charge-to-mass ratio regardless of protein type. Because the amount of SDS bound is almost always proportional to the molecular mass of the polypeptide and is independent of its sequence, SDS-polypeptide complexes migrate through polyacrylamide gels with mobilities dependent on the size of the polypeptide.

The electrophoretic mobilities of the resultant detergent-polypeptide complexes all assume the same functional relationship to their molecular masses. Migration of SDS complexes is toward the anode in a predictable manner, with low-molecular-mass complexes migrating faster than larger ones. The molecular mass of a protein can therefore be estimated from its relative mobility in calibrated SDS-PAGE and the occurrence of a single band in such a gel is a criterion of purity.

Modifications to the polypeptide backbone, such as *N*- or *O*-linked glycosylation, however, have a significant impact on the apparent molecular mass of a protein since SDS does not bind to a carbohydrate moiety in a manner similar to a polypeptide. Thus, a consistent charge-to-mass ratio is not maintained. The apparent molecular mass of proteins having undergone post-translational modifications is not a true reflection of the mass of the polypeptide chain.

Reducing conditions. Polypeptide subunits and three-dimensional structure is often maintained in proteins by the presence of disulfide bonds. A goal of SDS-PAGE analysis under reducing conditions is to disrupt this structure by reducing disulfide bonds. Complete denaturation and dissociation of proteins by treatment with 2-mercaptoethanol or dithiothreitol (DTT) will result in unfolding of the polypeptide backbone and subsequent complexation with SDS. In these conditions, the molecular mass of the polypeptide subunits can be calculated by linear regression in the presence of suitable molecular-mass standards.

Non-reducing conditions. For some analyses, complete dissociation of the protein into subunit peptides is not desirable. In the absence of treatment with reducing agents such as 2-mercaptoethanol or DTT, disulfide covalent bonds remain intact, preserving the oligomeric form of the protein. Oligomeric SDS-protein complexes migrate more slowly than their SDS-polypeptide subunits. In addition, non-reduced proteins may not be completely saturated with SDS and, hence, may not bind the detergent in a constant mass ratio. This makes molecular-mass determinations of these molecules by SDS-PAGE less straightforward than analyses of fully denatured polypeptides, since it is necessary that both standards and unknown proteins be in similar configurations for valid comparisons. However, the staining of a single band in such a gel is a criterion of purity.

CHARACTERISTICS OF DISCONTINUOUS BUFFER SYSTEM GEL ELECTROPHORESIS

The most popular electrophoretic method for the characterisation of complex mixtures of proteins involves the use of a discontinuous buffer system consisting of two contiguous, but distinct gels: a resolving or separating (lower) gel and a stacking (upper) gel. The two gels are cast with different porosities, pH, and ionic strengths. In addition, different mobile ions are used in the gel and electrode buffers. The buffer discontinuity acts to concentrate large volume samples in the stacking gel, resulting in improved resolution. When power is applied, a voltage drop develops across the sample solution which drives the proteins into the stacking gel. Glycinate ions from the electrode buffer follow the proteins into the stacking gel. A moving boundary region is rapidly formed with the highly mobile chloride ions in the front and the relatively slow glycinate ions in the rear. A localised

high-voltage gradient forms between the leading and trailing ion fronts, causing the SDS-protein complexes to form into a thin zone (stack) and migrate between the chloride and glycinate phases. Within broad limits, regardless of the height of the applied sample, all SDS-proteins condense into a very narrow region and enter the resolving gel as a well-defined, thin zone of high protein density. The large-pore stacking gel does not retard the migration of most proteins and serves mainly as an anticonvective medium. At the interface of the stacking and resolving gels, the proteins experience a sharp increase in retardation due to the restrictive pore size of the resolving gel. Once in the resolving gel, proteins continue to be slowed by the sieving of the matrix. The glycinate ions overtake the proteins, which then move in a space of uniform pH formed by the tris(hydroxymethyl)aminomethane and glycine. Molecular sieving causes the SDS-polypeptide complexes to separate on the basis of their molecular masses.

PREPARING VERTICAL DISCONTINUOUS BUFFER SDS POLYACRYLAMIDE GELS

Assembling of the gel moulding cassette. Clean the two glass plates (size: e.g. 10 cm × 8 cm), the polytetrafluoroethylene comb, the two spacers and the silicone rubber tubing (diameter e.g. 0.6 mm × 35 cm) with mild detergent and rinse extensively with water. Dry all the items with a paper towel or tissue. Lubricate the spacers and the tubing with non-silicone grease. Apply the spacers along each of the two short sides of the glass plate 2 mm away from the edges and 2 mm away from the long side corresponding to the bottom of the gel. Begin to lay the tubing on the glass plate by using one spacer as a guide. Carefully twist the tubing at the bottom of the spacer and follow the long side of the glass plate. While holding the tubing with one finger along the long side twist again the tubing and lay it on the second short side of the glass plate, using the spacer as a guide. Place the second glass plate in perfect alignment and hold the mould together by hand pressure. Apply two clamps on each of the two short sides of the mould. Carefully apply four clamps on the longer side of the gel mould thus forming the bottom of the gel mould. Verify that the tubing is running along the edge of the glass plates and has not been extruded while placing the clamps. The gel mould is now ready for pouring the gel.

Preparation of the gel. In a discontinuous buffer SDS polyacrylamide gel, it is recommended to pour the resolving gel, let the gel set, and then pour the stacking gel since the composition of the two gels in acrylamide-bisacrylamide, buffer and pH are different.

Preparation of the resolving gel. In a conical flask, prepare the appropriate volume of solution containing the desired concentration of acrylamide for the resolving gel, using the values given in Table 2.2.31.-1. Mix the components in the order shown. Where appropriate, before adding the ammonium persulfate solution and the tetramethylethylenediamine (TEMED), filter the solution if necessary under vacuum through a cellulose acetate membrane (pore diameter 0.45 µm); keep the solution under vacuum by swirling the filtration unit until no more bubbles are formed in the solution. Add appropriate amounts of ammonium persulfate solution and TEMED as indicated in Table 2.2.31.-1, swirl and pour immediately into the gap between the two glass plates of the mould. Leave sufficient space for the stacking gel (the length of the teeth of the comb plus 1 cm). Using a tapered glass pipette, carefully overlay the solution with water-saturated isobutanol. Leave the gel in a vertical position at room temperature to allow polymerisation.

Preparation of the stacking gel. After polymerisation is complete (about 30 min), pour off the isobutanol and wash the top of the gel several times with water to remove the isobutanol overlay and any unpolymerised acrylamide. Drain as much fluid as possible from the top of the gel, and then remove any remaining water with the edge of a paper towel.

In a conical flask, prepare the appropriate volume of solution containing the desired concentration of acrylamide, using the values given in Table 2.2.31.-2. Mix the components in the order shown. Where appropriate, before adding the ammonium persulfate solution and the TEMED, filter the solution if necessary under vacuum through a cellulose acetate membrane (pore diameter: 0.45 µm); keep the solution under vacuum by swirling the filtration unit until no more bubbles are formed in the solution. Add appropriate amounts of ammonium persulfate solution and TEMED as indicated in Table 2.2.31.-2, swirl and pour immediately into the gap between the two glass plates of the mould directly onto the surface of the polymerised resolving gel. Immediately insert a clean polytetrafluoroethylene comb into the stacking gel solution, being careful to avoid trapping air bubbles. Add more stacking gel solution to fill the spaces of the comb completely. Leave the gel in a vertical position and allow to polymerise at room temperature.

Table 2.2.31.-1. – *Preparation of resolving gel*

Solution components	**Component volumes (mL) per gel mould volume of**							
	5 mL	**l0 mL**	**15 mL**	**20 mL**	**25 mL**	**30 mL**	**40 mL**	**50 mL**
6 per cent acrylamide								
Water R	2.6	5.3	7.9	10.6	13.2	15.9	21.2	26.5
Acrylamide solution(1)	1.0	2.0	3.0	4.0	5.0	6.0	8.0	10.0
1.5 M Tris (pH 8.8)(2)	1.3	2.5	3.8	5.0	6.3	7.5	10.0	12.5
100 g/L SDS(3)	0.05	0.1	0.15	0.2	0.25	0.3	0.4	0.5
100 g/L APS(4)	0.05	0.1	0.15	0.2	0.25	0.3	0.4	0.5
TEMED(5)	0.004	0.008	0.012	0.016	0.02	0.024	0.032	0.04

The conductivity (formerly called specific conductance) of a solution (κ) is, by definition, the reciprocal of resistivity (ρ). Resistivity is defined as the quotient of the electric field and the density of the current. The resistance R (in Ω) of a conductor of cross-section S (in cm^2) and length L (in cm) is given by the expression:

$$R = \rho \frac{L}{S}$$

$$\text{thus: } R = \frac{1}{\kappa} \times \frac{L}{S} \text{ or } \kappa = \frac{1}{R} \times \frac{L}{S}$$

L/S corresponds to the ideal cell constant.

The unit of conductivity in the International System is the siemens per metre ($S \cdot m^{-1}$). In practice, the electrical conductivity of a solution is expressed in siemens per centimetre ($S \cdot cm^{-1}$) or in microsiemens per centimetre ($\mu S \cdot cm^{-1}$). The unit of resistivity in the International System is the ohm-metre (Ω·m). The resistivity of a solution is generally expressed in ohm-centimetres (Ω·cm). Unless otherwise prescribed, the reference temperature for the expression of conductivity or resistivity is 25 °C.

The apparatus and operating procedure described below are applicable to laboratory measurement of conductivity greater than 10 $\mu S \cdot cm^{-1}$. The measurement of conductivity of water is dealt with in the relevant monographs.

APPARATUS

The apparatus used (conductivity meter or resistivity meter) measures the resistance of the column of liquid between the electrodes of the immersed measuring device (conductivity cell). The apparatus is supplied with alternating current to avoid the effects of electrode polarisation. It is equipped with a temperature probe and a temperature compensation device.

The conductivity cell contains 2 parallel platinum electrodes coated with platinum black, each with a surface area S, and separated from the other by a distance L. Both are generally protected by a glass tube. Other types of cells may also be used.

OPERATING PROCEDURE

Determination of the cell constant

Choose a conductivity cell that is appropriate for the properties and conductivity of the solution to be examined. The higher the expected conductivity, the higher the cell constant that must be chosen (low ρ). Commonly used conductivity cells have cell constants of the order of 0.1 cm^{-1}, 1 cm^{-1} and 10 cm^{-1}. Use a certified reference material, for example a solution of potassium chloride, that is appropriate for the measurement. The conductivity value of the certified reference material, should be near the expected conductivity value of the solution to be examined. Other certified reference materials may be used especially for cells having a constant of 0.1 cm^{-1}. Rinse the cell several times with *distilled water R* and at least twice with the certified reference material used for the determination of the cell constant of the conductivity cell. Measure the resistance of the conductivity cell using the certified reference material at 25 ± 1 °C. The cell constant K_{cell} (in cm^{-1}) depends on the geometry of the conductivity cell and is given by the expression:

$$K_{cell} = R_{CRM} \times \kappa_{CRM}$$

R_{CRM} = measured resistance, expressed in mega-ohms,

κ_{CRM} = conductivity of the certified reference material solution used, expressed in microsiemens per centimetre.

The measured constant K_{cell} of the conductivity cell must be within 5 per cent of the value indicated.

If the determination of the cell constant is carried out at a different temperature than that indicated for the certified reference material, the conductivity value may be calculated from the following expression:

$$\kappa_T = \kappa_{TCRM} \times [1 + \alpha (T - T_{CRM})]$$

κ_T = value of conductivity at the different temperature,

κ_{TCRM} = value of conductivity of the certified reference material,

T = temperature set for calibration,

T_{CRM} = temperature indicated for the certified reference material,

α = temperature coefficient for the conductivity value of the certified reference material; for potassium chloride α = 0.021.

Determination of the conductivity of the solution to be examined

After calibrating the apparatus with a certified reference material solution, rinse the conductivity cell several times with *distilled water R* and at least twice with the aqueous solution to be examined. Carry out successive measurements as described in the monograph.

01/2008:20239

2.2.39. MOLECULAR MASS DISTRIBUTION IN DEXTRANS

Examine by size-exclusion chromatography (*2.2.30*).

Test solution. Dissolve 0.200 g of the substance to be examined in the mobile phase and dilute to 10 mL with the mobile phase.

Marker solution. Dissolve 5 mg of *glucose R* and 2 mg of *dextran V_0 CRS* in 1 mL of the mobile phase.

Calibration solutions. Dissolve separately in 1 mL of the mobile phase 15 mg of *dextran 4 for calibration CRS*, 15 mg of *dextran 10 for calibration CRS*, 20 mg of *dextran 40 for calibration CRS*, 20 mg of *dextran 70 for calibration CRS* and 20 mg of *dextran 250 for calibration CRS*.

System suitability solution. Dissolve either 20 mg of *dextran 40 for performance test CRS* (for dextran 40) or 20 mg of *dextran 60/70 for performance test CRS* (for dextran 60 and dextran 70) in 1 mL of the mobile phase.

The chromatographic procedure may be carried out using:

- a column 0.3 m long and 10 mm in internal diameter, packed with *cross-linked agarose for chromatography R* or a series of columns, 0.3 m long and 10 mm in internal diameter, packed with *polyether hydroxylated gel for chromatography R*,
- as the mobile phase, at a flow rate of 0.5-1 mL/min, kept constant to ± 1 per cent per hour, a solution containing 7 g of *anhydrous sodium sulfate R* and 1 g of *chlorobutanol R* in 1 L of *water R*,
- as detector a differential refractometer,
- a 100 µL to 200 µL loop injector,

maintaining the system at a constant temperature (± 0.1 °C).

CALIBRATION OF THE CHROMATOGRAPHIC SYSTEM

Carry out replicate injections of the chosen volume of the marker solution. The chromatogram shows 2 peaks, the first of which corresponds to *dextran V_0 CRS* and the second of which corresponds to *glucose R*. From the elution volume of the peak corresponding to dextran V_0, calculate the void volume V_0 and from the peak corresponding to dextrose, calculate the total volume V_t.

Inject the chosen volume of each of the calibration solutions. Draw carefully the baseline of each of the chromatograms. Divide each chromatogram into p (at least 60) equal vertical sections (corresponding to equal elution volumes). In each

section i, corresponding to an elution volume V_i measure the height (y_i) of the chromatogram line above the baseline and calculate the coefficient of distribution K_i using the expression:

$$\frac{(V_i - V_0)}{(V_t - V_0)} \qquad (1)$$

V_0 = void volume of the column, determined using the peak corresponding to *dextran V_0 CRS* in the chromatogram obtained with the marker solution,

V_t = total volume of the column, determined using the peak corresponding to glucose in the chromatogram obtained with the marker solution,

V_i = elution volume of section i in the chromatogram obtained with each of the calibration solutions.

Carry out the calibration using either of the following methods.

Calibration by plotting of the curve. For each of the dextrans for calibration calculate the coefficient of distribution K_{max} corresponding to the maximum height of the chromatographic line, using expression (1). Plot on semilogarithmic paper the values of K_{max} (on the x-axis) against the declared molecular mass at the maximum height of the chromatographic line (M_{max}) of each of the dextrans for calibration and glucose. Draw a first calibration curve through the points obtained, extrapolating it from the point K_{max} obtained with *dextran 250 for calibration CRS* to the lowest K value obtained for this CRS (Figure 2.2.39.-1). Using this first calibration curve, transform, for each chromatogram, all K_i values into the corresponding molecular mass M_i, thus obtaining the molecular mass distribution. Calculate for each dextran for calibration the average molecular mass M_w using equation (3) below. If the calculated values for M_w do not differ by more than 5 per cent from those declared for each of the dextrans for calibration and the mean difference is within ± 3 per cent, the calibration curve is approved. If not, move the calibration curve along the y-axis and repeat the procedure above until the calculated and the declared values for M_w do not differ by more than 5 per cent.

Calibration by calculation of the curve. Calculate from equations (2) and (3) below, using a suitable method[(4)], values for b_1, b_2, b_3, b_4 and b_5 that give values of M_w within 5 per cent of the declared values of each of the dextrans for calibration and 180 ± 2 for glucose:

$$M_i = b_5 + e^{\left(b_4 + b_1 K_i + b_2 K_i^2 + b_3 K_i^3\right)} \qquad (2)$$

$$\overline{M}_w = \frac{\sum_{i=1}^{p} (y_i M_i)}{\sum_{i=1}^{p} y_i} \qquad (3)$$

p = number of sections dividing the chromatograms,

y_i = height of the chromatographic line above the baseline in section i,

M_i = molecular mass in section i.

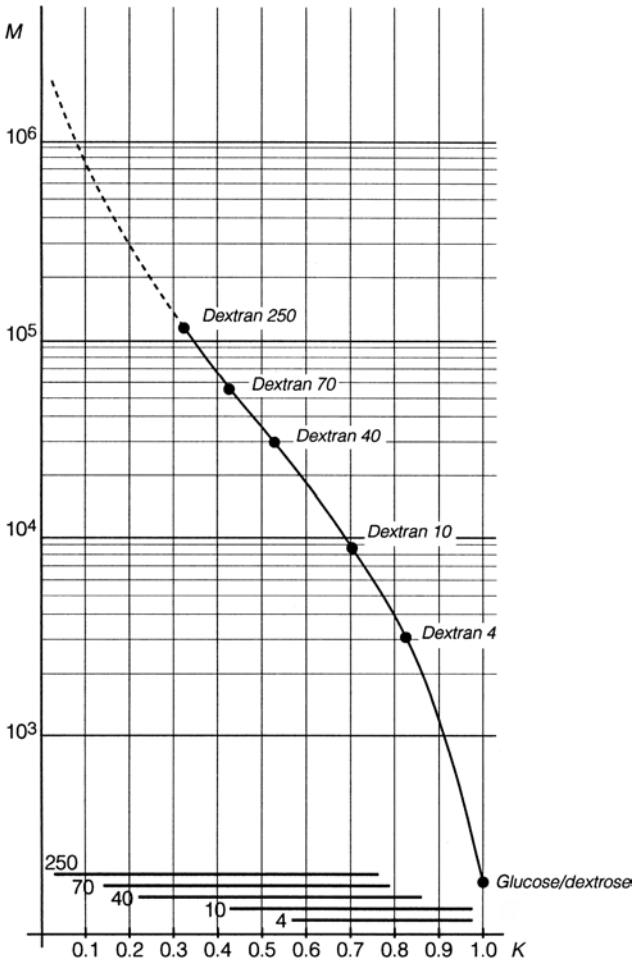

Figure 2.2.39.-1. - *Example of a calibration curve.*

The dotted line corresponds to the part of the curve that is extrapolated. Horizontal lines at the bottom of the figure represent the width and the position of the chromatographic line obtained with each of the dextrans for calibration.

SYSTEM SUITABILITY

Inject the chosen volume of the appropriate system suitability solution.

Average molecular mass of dextran for performance test CRS. Calculate the average molecular mass M_w as indicated under Calibration of the chromatographic system, using either the plotted calibration curve or the values obtained above for b_1, b_2, b_3, b_4 and b_5. The test is not valid unless M_w is:

- 41 000 to 47 000 (*dextran 40 for performance test CRS*),
- 67 000 to 75 000 (*dextran 60/70 for performance test CRS*).

(4) An iterative method such as the Gauss-Newton method modified by Hartley is suitable (see O. Hartley, Tecnometrics, 3 (1961) and G. Nilsson and K. Nilsson, J. Chromat. 101, 137 (1974)). A curve-fitting programme for microcomputers, capable of non-linear regression, may be used.

Average molecular mass of the 10 per cent high-fraction dextran. Calculate M_w for the 10 per cent high-fraction dextran eluted through section n using the equation:

$$M_w = \frac{\sum_{i=1}^{n} (y_i M_i)}{\sum_{i=1}^{n} y_i} \quad (4)$$

in which n is defined by the expressions:

$$\sum_{i=1}^{n} y_i \leq 0.1 \left(\sum_{i=1}^{p} y_i \right) \quad (5)$$

$$\sum_{i=1}^{n+1} y_i > 0.1 \left(\sum_{i=1}^{p} y_i \right) \quad (6)$$

p = number of sections dividing the chromatograms,

y_i = height of the chromatographic line above the baseline in section i,

M_i = molecular mass in section i.

The test is not valid unless M_w of the 10 per cent high fraction dextran is:

- 110 000 to 130 000 (*dextran 40 for performance test CRS*),
- 190 000 to 230 000 (*dextran 60/70 for performance test CRS*).

Average molecular mass of the 10 per cent low-fraction dextran. Calculate M_w for the 10 per cent low-fraction dextran eluted in and after section m using the expression:

$$M_w = \frac{\sum_{i=m}^{p} (y_i M_i)}{\sum_{i=m}^{p} y_i} \quad (7)$$

in which m is defined by the expressions:

$$\sum_{i=m}^{p} y_i \leq 0.1 \left(\sum_{i=1}^{p} y_i \right) \quad (8)$$

$$\sum_{i=m-1}^{p} y_i > 0.1 \left(\sum_{i=1}^{p} y_i \right) \quad (9)$$

p = number of sections dividing the chromatograms,

y_i = height of the chromatographic line above the baseline in section i,

M_i = molecular mass in section i.

The test is not valid unless M_w of the 10 per cent low-fraction dextran is:

- 6000 to 8500 (*dextran 40 for performance test CRS*),
- 7000 to 11 000 (*dextran 60/70 for performance test CRS*).

MOLECULAR MASS DISTRIBUTION OF THE DEXTRAN TO BE ANALYSED

Inject the chosen volume of the test solution and calculate M_w of the total molecular mass distribution, M_w of the 10 per cent high-fraction dextran and M_w of the 10 per cent low-fraction dextran as indicated under System suitability.

01/2014:20240

2.2.40. NEAR-INFRARED SPECTROSCOPY

Near-infrared (NIR) spectroscopy is a technique with wide and varied applications in pharmaceutical analysis. The NIR spectral range extends from 780 nm to 2500 nm (from 12 800 cm^{-1} to 4000 cm^{-1}). NIR spectra are dominated by C-H, N-H, O-H and S-H overtones and combinations of fundamental mid-infrared (MIR) vibrations. They contain composite chemical and physical information and in most cases this information can be extracted by suitable mathematical data treatment. NIR bands are much weaker than the fundamental MIR vibrations from which they originate. Because absorptivities in the NIR range are low, radiation can penetrate up to several millimetres into materials, including solids. Furthermore, many materials such as glass are relatively transparent in this region.

Measurements can be made directly *in situ*, in addition to standard sampling and testing procedures. NIR measurements can be performed off-line, and also at-line or in-line, and on-line for process analytical technology (PAT). Suitable chemometric methods may be required for identification. However, when the specificity criteria for a qualitative method are met, chemical identification or solid-state characterisation is possible by direct comparison of the untreated or pre-treated spectra obtained with the chemical substance being examined with a spectrum of a reference substance.

NIR spectroscopy has a wide variety of applications for chemical, physical and process analysis, for example:

Chemical analysis:

- identification of active substances, excipients, dosage forms, manufacturing intermediates, chemical materials and packaging materials;
- qualification of active substances, excipients, dosage forms, manufacturing intermediates and packaging materials, including batch-to-batch spectral comparison and supplier change assessment;
- quantification of active substances in a sample matrix, determination of chemical values such as hydroxyl value, determination of absolute water content, determination of degree of hydroxylation and control of solvent content.

Physical analysis:

- crystalline form and crystallinity, polymorphism, solvates, particle size;
- disintegration, hardness;
- film properties.

Process analysis:

- monitoring of unit operations such as synthesis, crystallisation, blending, drying, granulation and coating, for the purpose of process control;
- control and endpoint detection.

Measurements in the NIR region are influenced by many chemical and physical factors as described below; the reproducibility and relevance of results depend on control of these factors and measurements are usually valid only for a defined calibration model.

APPARATUS

All NIR measurements are based on passing light through or into a sample and measuring the attenuation of the emerging (transmitted or reflected) beam. Spectrometers for measurement in the NIR region consist of a suitable light source (such as a highly-stable quartz-tungsten lamp), a monochromator or interferometer, and a detector. Common monochromators are acousto-optic tunable filters (AOTF), gratings or prisms. Traditionally, many NIR instruments have a single-beam design, though some process instruments use internal referencing and can therefore be dual-beam

(for example in diode array instruments). Silicon, lead sulfide, and indium gallium arsenide are examples of detector materials. Conventional cuvette sample holders, fibre-optic probes, transmission dip cells, neutral borosilicate vials and spinning or traversing sample holders are a few examples of sampling devices. The selection is based on the intended application, paying particular attention to the suitability of the sampling system for the type of sample to be analysed. Suitable data processing and evaluation units (e.g. software and computer) are usually part of the system.

It is common to express the wavelength (λ) in nanometres and the wavenumber (ν) in reciprocal centimetres (cm^{-1}), depending on the measurement technique and apparatus. Conversion between nm and cm^{-1} is performed according to the following expression:

$$v_{cm^{-1}} = 10^7 \times \frac{1}{\lambda_{nm}}$$

MEASUREMENT METHODS

Transmission mode. Transmittance (T) is a measure of the decrease in radiation intensity at given wavelengths when radiation is passed through the sample. The sample is placed in the optical beam between the source and the detector. The arrangement is analogous to that in many conventional spectrometers. The resulting spectrum can be presented directly in terms of transmittance (T) and/or absorbance (A) (y-axis) versus the wavelength or wavenumber (x-axis).

$$T = \frac{I}{I_0}$$

I_0 = intensity of incident radiation;

I = intensity of transmitted radiation;

$$A = -\log_{10} T = \log_{10}\left(\frac{1}{T}\right) = \log_{10}\left(\frac{I_0}{I}\right)$$

Diffuse reflection mode. The diffuse reflection mode gives a measure of reflectance (R), the ratio of the intensity of light reflected from the sample (I) to that reflected from a background or reference reflective surface (I_r). Depending on the chemical composition and physical characteristics of the sample, NIR radiation can penetrate a more or less substantial distance into the sample, where it can be absorbed by the overtones and combinations of the fundamental vibrations of the analyte species present in the sample. Non-absorbed radiation is partially reflected back from the sample to the detector. NIR reflectance spectra are typically obtained by calculating and plotting $\log_{10}(1/R)$ (y-axis) versus the wavelength or wavenumber (x-axis).

$$R = \frac{I}{I_r}$$

I = intensity of light diffusively reflected from the sample;

I_r = intensity of light reflected from the background or reference reflective surface;

$$A_R = \log_{10}\left(\frac{1}{R}\right) = \log_{10}\left(\frac{I_r}{I}\right)$$

Transflection mode. This mode is a combination of transmittance and reflectance. In the measurement of transflectance (T^*), a mirror or a diffuse reflectance surface is used to reflect the transmitted radiation back through the sample, thus doubling the pathlength. Non-absorbed radiation is reflected back from the sample to the detector. The resulting spectrum can be presented directly in terms of transflectance (T^*) and/or absorbance (A^*) (y-axis) versus the wavelength or wavenumber (x-axis).

$$T^* = \frac{I}{I_T}$$

I = intensity of transflected radiation measured from the sample;

I_T = intensity of transflected radiation of the reference material as background;

$$A^* = \log_{10}\left(\frac{1}{T^*}\right) = \log_{10}\left(\frac{I_T}{I}\right)$$

SAMPLE PREPARATION/PRESENTATION

Sample preparation and presentation may vary according to the measurement mode. The following requirements are necessary for all sampling techniques:

- optimise the measuring time and number of scans to optimise the signal-to-noise ratio;
- find the best suitable measurement mode for the intended application (transmission, diffuse reflection or transflection);
- find the best orientation of the sample (e.g. to minimise the impact of debossing on tablets);
- find the best suitable accessory (e.g. transmission cell or immersion probe);
- optimise pathlength in transmission and transflection modes;
- find a suitable spectroscopic background reference material;
- show that the background reference material is reliable over time and that the measurement of the background is reproducible and stable over time;
- when measuring moving materials or samples (for process-related measurements) it is important to obtain a representative spectrum (e.g. by adjusting the measuring time, the number of scans, co-adding individual spectra, or increasing the beam size);
- ensure there is no fouling of the sensor, for example with build-up of material or contamination;
- the measuring conditions (measuring time, beam size) in relation to the minimal sample size should be justified.

In some process analysis situations it may be impossible to remove a probe for reference background data collection; various options are therefore to be considered, including internal referencing, measurement of a background reference using a 2nd detector, etc. Only spectra measured against a background possessing the same optical properties can be directly compared with one another.

Transmission mode. The measurement of transmittance (T) is dependent on a background transmittance spectrum for its calculation. Examples of background references include air, a polymeric disc, an empty cell, a solvent blank or in special cases a reference sample. The method generally applies to liquids (diluted or undiluted), dispersions, solutions and solids (including tablets and capsules). For transmittance measurements of solids, a suitable sample accessory is used. Liquid samples are examined in a cell of suitable pathlength (typically 0.5-4 mm), transparent to NIR radiation, or alternatively by immersion of a fibre-optic probe of a suitable configuration.

Diffuse reflection mode. This mode generally applies to solids. The sample is examined directly, or in a suitable device (for example a sample holder), or in direct contact with a fibre-optic probe. For process monitoring, material can be analysed through a polished window interface (e.g. sapphire), or using an in-line fibre-optic probe. Care must be taken to ensure that the measuring conditions are as reproducible as

possible from one sample to another. The reflected radiation of a background reference is scanned to obtain the baseline, and then the reflectance of one or more analytical samples is measured. Common reflectance references include ceramic, thermoplastic resins and gold. Other suitable materials may be used.

Transflection mode. This mode generally applies to liquids, suspensions and clear plastic materials. A reflector is placed behind the sample so as to double the pathlength. This configuration can be adopted to share the same instrument geometry with reflectance and fibre-optic probe systems where the source and the detector are on the same side of the sample. The sample is examined through a cell with a mirror or a suitable diffusive reflector, made either of metal or of an inert substance (for example, dried titanium dioxide) not absorbing in the NIR region. Liquids can also be measured using in-line transflectance probes.

FACTORS AFFECTING SPECTRAL RESPONSE

Environment. The environment temperature and humidity must be taken into consideration before carrying out measurements.

Sample presentation area. The sample presentation area or probe end must be clean of residue prior to measurement. Similarly, the in-line or on-line interface to the sample should not have significant product or contamination build-up, which would interfere with the desired measurement.

Sample temperature. This parameter is important for aqueous solutions and many liquids, where a difference of a few degrees can result in measurable spectral changes which may have a significant effect on the analysis. Temperature is also an important parameter for solids and powders containing water.

Moisture and solvent residues. Moisture and solvent residues present in the samples will contribute significant absorption bands in the NIR region.

Sample thickness. Sample thickness is a known source of spectral variability and must be assessed and/or controlled, particularly for tablet and capsule analysis in transmittance mode. For the measurement of compressed powders, an infinite thickness is typically reached after 5 mm of sample depth (e.g. in a vial).

Sample optical properties. In solids, both surface and bulk scattering properties of samples must be taken into account. Spectra of physically, chemically or optically heterogeneous samples may require increasing the beam size, or examining multiple samples or spinning the sample to obtain a representative spectrum of the sample. Certain factors such as differing degree of compaction or particle size in powdered materials and surface finish can cause significant spectral differences.

Solid-state forms. Variations in solid-state forms (polymorphs, hydrates, solvates and amorphous forms) influence vibrational spectra. Hence, different crystalline forms as well as the amorphous form of a solid may be distinguished from one another on the basis of their NIR spectra. Where multiple crystalline forms are present, care must be taken to ensure that the calibration samples have a distribution of forms relevant to the intended application.

Age of samples. Samples may exhibit changes in their chemical, physical or optical properties over time. Depending on the storage conditions, solid samples may either absorb or desorb water, and portions of amorphous material may crystallise. Materials used for NIR calibration should be representative of future samples and their matrix variables.

PRE-TREATMENT OF NIR SPECTRAL DATA

In many cases, and particularly for reflection mode spectra, some form of mathematical pre-treatment of the spectrum may be useful prior to the development of a classification or calibration model. The aim can be, for example, to reduce baseline variations, to reduce the impact of known variations that are interfering in the subsequent mathematical models, or to simplify data before use. In some cases spectra may also be normalised or corrected for scatter, for example using standard normal variate (SNV) transformation. Spectral pre-treatment techniques may include, for example, windowing and noise reduction and the numerical calculation of the first- or second-order derivative of the spectrum. Higher-order derivatives are not recommended because of increased spectral noise.

CONTROL OF INSTRUMENT PERFORMANCE

Use the apparatus according to the manufacturer's instructions and carry out the prescribed verification at regular intervals, according to the use of the apparatus and the application. For in-line and on-line applications, the use of alternative means of control of instrument performance must be scientifically justified. For example, utilise the standards built into the instrument or separate channels/probes to demonstrate instrument performance (pending practicality).

System suitability tests may be required prior to sample scanning, and the instrument attributes with potential impact on suitability of the final measurement (typically photometric noise and wavelength accuracy) must be tested. The frequency at which each performance test is carried out must be risk-assessed depending on the instrument type and its environment. For example, instruments placed in harsh environments with variations in temperature and humidity may need frequent performance testing. Cases where the measurement system cannot be removed such as an in-line probe or flow cell are also to be considered.

Some accessories are custom designed and therefore require adequate performance testing.

Verification and calibration of the wavelength or wavenumber scale (except for filter apparatus). Verify the wavelength scale employed, generally in the region between 780 nm and 2500 nm (12 800 cm^{-1} to 4000 cm^{-1}) or in the intended spectral range using one or more suitable wavelength standards which have characteristic maxima or minima within the wavelength range to be used. For example, *methylene chloride R*, *talc R*, wavelength reference lamps or a mixture of rare-earth oxides are suitable reference materials. Other suitable standards may also be used. Obtain a spectrum and measure the position of at least 3 peaks distributed over the range used. For rare-earth oxides, the National Institute of Standards and Technology (NIST) provides suitable reference materials. Fourier transform (FT) instruments have a linear frequency range, therefore wavelength certification at a single frequency is sufficient.

Verification and calibration of photometric linearity. The photometric linearity is demonstrated with a set of transmittance or reflectance standards with known percentage values of transmittance or reflectance. For reflectance measurements, carbon-doped polymer standards are available. Ensure that the absorbance of the materials used is relevant to the intended linear working range of the method. Subsequent verifications of photometric linearity can use the initial observed absorbance values as the reference values. Non-linear calibration models and hence non-linear responses are acceptable with understanding demonstrated by the user.

Spectra obtained from reflectance and transmittance standards are subject to variability due to the differences between the experimental conditions under which they were factory-calibrated and those under which they are subsequently put to use. Hence, the percentage reflectance values supplied with a set of calibration standards may not be useful in the attempt to establish an 'absolute' calibration for a given instrument. As long as the standards do not change chemically or physically and the same reference background is used as was used to obtain the certified values, subsequent measurements of the same standards under

identical conditions, including precise sample positioning, give information on long-term stability of the photometric response. A tolerance of ± 2 per cent of the absorbance value is acceptable for long-term stability; this verification is only necessary if the spectra are used without pre-treatment.

Recommendations for the conditions used to control instrument performance for the various measurement modes are summarised in Table 2.2.40.-1.

Table 2.2.40.-1 – *Control of instrument performance*

Measurement mode	Reflection	Transflection	Transmission
Verification of wavelength scale (except for filter apparatus)	Typical tolerances for agreement with standard values are: ± 1.0 nm at 780 nm (± 16 cm^{-1} at 12 800 cm^{-1}); ± 1.0 nm at 1200 nm (± 8 cm^{-1} at 8300 cm^{-1}); ± 1.0 nm at 1600 nm (± 6 cm^{-1} at 6250 cm^{-1}); ± 1.5 nm at 2000 nm (± 4 cm^{-1} at 5000 cm^{-1}); ± 1.5 nm at 2500 nm (± 2 cm^{-1} at 4000 cm^{-1}). For the reference material used, apply the tolerance for the nearest wavelength or wavenumber for each peak used. For diode array instruments, most often the pixel resolution (wavelength between pixels) can be as large as 10 nm. The pixel resolution must be adapted to match the spectral resolution. The peak-finding algorithms are critical to wavelength accuracy. Practically, ± 2 nm is appropriate for peak wavelength accuracy using such instrumentation. Alternatively, refer to manufacturer's specifications for acceptance.		
Bench/mobile instrument	Measure *talc R* via a suitable medium or by fibre-optic probe. *Talc R* has characteristic peaks at 948 nm, 1391 nm and 2312 nm suitable for calibration. Alternatively, other suitable standards may also be used that ensure wavelength accuracy in the region of working methodology. For example, measure an internal polystyrene standard if built-in, or measure a NIST standard or other traceable material, and assess 3 peaks across the wavelength range for calibration.	A suspension of 1.2 g of dry *titanium dioxide R* in about 4 mL of *methylene chloride R* is used directly with a cell or a probe. Titanium dioxide has no absorption in the NIR range. Spectra are recorded with a maximum nominal instrument bandwidth of 10 nm at 2500 nm (16 cm^{-1} at 4000 cm^{-1}). Methylene chloride has characteristic sharp bands at 1155 nm, 1366 nm, 1417 nm, 1690 nm, 1838 nm, 1894 nm, 2068 nm and 2245 nm. Choose 3 peaks across the wavelength range for calibration. Other suitable standards may also be used, such as a liquid transflection standard mixed with titanium dioxide or some other reflective medium.	*Methylene chloride R* may be used and has characteristic sharp bands at 1155 nm, 1366 nm, 1417 nm, 1690 nm, 1838 nm, 1894 nm, 2068 nm and 2245 nm. Choose 3 peaks across the wavelength range for calibration. Other suitable standards may also be used.
Process instrument	If it is not practically possible to measure a traceable reference material at the point of sample measurement, use internal material such as polystyrene, fibreglass or solvent and/or water vapour. Alternatively, adopt a second external channel/probe. For FT instruments, the calibration of the wavenumber scale may be performed using a narrow, isolated water-vapour line, for example, the line at 7306.74 cm^{-1}, or 7299.45 cm^{-1}, or 7299.81 cm^{-1} or a narrow line from a certified reference material.		

Verification of wavelength repeatability (except for filter apparatus)	The standard deviation of the wavelength is consistent with the specifications of the instrument manufacturer, or otherwise scientifically justified.
Bench/mobile instrument	Verify the wavelength repeatability using a suitable external or internal standard.
Process instrument	Verify the wavelength repeatability using a suitable external or internal standard.

Verification of photometric linearity and response stability[1]	Measure 4 photometric standards across the working method absorbance range.		
Bench/mobile instrument	Analyse 4 reflectance standards, for example in the range of 10-99 per cent, including 10 per cent, 20 per cent, 40 per cent and 80 per cent. In some circumstances 2 per cent may be appropriate. Evaluate the observed absorbance values against the reference absorbance values, for example perform a linear regression. Acceptable tolerances are 1.00 ± 0.05 for the slope and 0.00 ± 0.05 for the intercept for the 1st verification of photometric linearity of an instrument. Subsequent verifications of photometric linearity can use the initial observed absorbance values as the reference values.	Transflection measurements can use appropriate reflectance or transmittance standards and criteria.	Analyse 4 transmittance standards to cover the absorbance values over the working absorbance range of the modelled data. Evaluate the observed absorbance values against the reference absorbance values, for example perform a linear regression. Acceptable tolerances are 1.00 ± 0.05 for the slope and 0.00 ± 0.05 for the intercept for the 1st verification of photometric linearity of an instrument. Subsequent verifications of photometric linearity can use the initial observed absorbance values as the reference values.

Measurement mode	Reflection	Transflection	Transmission
Process instrument	If photometric reflectance and transmittance standards cannot be measured at the point of sample measurement, use the photometric standards built into the instrument. Process instruments can use internal photometric standards for photometric linearity. Follow the manufacturer's verified tolerances in such cases.		

Verification of photometric noise[1]	Determine the photometric noise at a relevant photometric region of the spectrum using a suitable reflectance standard, for example, white reflective ceramic tiles or carbon-doped polymer standards. Follow the manufacturer's methodology and specifications.	
Bench/mobile instrument	Scan the reflectance low flux standard (e.g. 5 or 10 per cent, carbon-doped polymer standard) over a suitable wavelength range in accordance with the manufacturer's recommendation and calculate the photometric noise as peak-to-peak noise.	Scan the transmittance high flux standard (e.g. 90 or 99 per cent, carbon-doped polymer standard) over a suitable wavelength/wavenumber range in accordance with the manufacturer's recommendation and calculate the photometric noise as peak-to-peak noise.
Process instrument	As above, or if not practically possible, use the standard built into the instrument for noise testing and manufacturer specifications.	As above, or if not practically possible, use the standard built into the instrument for noise testing and manufacturer specifications.

[1] *Verification of photometric linearity* and *Verification of photometric noise* are not required for instruments using methods to perform simple identifications which do not use the photometric absorbances as part of model strategy (for example, simple correlation with absorbing wavelengths).

QUALITATIVE ANALYSIS (IDENTIFICATION AND CHARACTERISATION)

Establishment of a spectral reference library. Record the spectra of a suitable number of representative samples of the substance which have known, traceable identities, and that exhibit the variation typical for the substance to be analysed (for example, solid-state form, particle size, etc.). Libraries are built using representative samples under appropriate environmental conditions. The set of spectra obtained represents the information which can be used for identification of the sample to be analysed.

The collection of spectra in the library may be represented in different ways defined by the mathematical technique used for identification. These may be:

- all individual spectra representing the substance;
- a mean spectrum of the measured batches for each chemical substance;
- if necessary, a description of the variability within the substance spectra.

The number of substances in the library depends on the specific application. All spectra in the library used have the same:

- spectral range and number of data points;
- technique of measurement;
- data pre-treatment.

If sub-groups (sub-libraries) are created, the above criteria are applied independently for each group. Sub-libraries are individually validated. Original spectral data for the preparation of the spectral library must be archived. Caution must be exercised when performing any mathematical transformation, as artefacts can be introduced or essential information (important with qualification methods) can be lost. The suitability of the algorithm used should be demonstrated by successful method validation and in all cases the rationale for the use of transform must be documented.

Direct comparison of substance and reference spectra. Direct comparison of representative spectra of the substance to be examined and of a reference substance for qualitative chemical or physical identification purposes may not require use of a reference spectral library where specificity permits.

Data evaluation. Direct comparison of the representative spectrum of the substance to be examined is made with the individual or mean reference spectra of all substances in the database on the basis of their mathematical correlation or other suitable algorithms. A set of known reference mean spectra and the variability around this mean can be used with an algorithm for classification; alternatively, this can be achieved visually by overlaying spectral data if specificity is inherent. There are different techniques available, such as principal component analysis (PCA), cluster analysis, and soft independent modelling by class analogy (SIMCA). The reliability of the technique chosen for a particular application has to be validated according to the following:

Validation of the model. Identification methods using direct spectral comparison must be validated in accordance with identification method validation procedures.

The validation parameters for qualitative methods are robustness and specificity.

LIMIT ANALYSIS

Relative comparison of spectra. A calibration is not required when comparing a set of spectra for limit analysis purposes, such as the maximum or minimum absorbance at which an analyte absorbs. Also, dryer end point control may use a qualitative approach around a specific absorbing wavelength. Appropriate spectral ranges and pre-treatments (if used) must be shown to be fit for purpose.

Specificity. The relative discriminatory power for a limit test must be demonstrated. The extent of specificity testing is dependent on the application and the risks being controlled. Variations in matrix concentrations within the operating range of the method must not affect the measurement.

TREND ANALYSIS

Relative comparison of spectra. A calibration is not necessarily required when comparing a set of spectra for trend analysis purposes, such as the moving block approach to estimate statistical parameters such as mean, median and standard deviation. For example, blend uniformity monitoring using NIR spectroscopy has adopted such data analysis approaches. Appropriate spectral ranges and algorithms must be used for trend analyses.

Specificity. The relative discriminatory power for trend analysis must be demonstrated. The extent of specificity testing is dependent on the application and the risks being controlled. Variations in matrix concentrations within the operating range of the method must not affect the trend analysis.

QUANTITATIVE ANALYSIS

Establishment of a spectral reference library for a calibration model. Calibration is the process of constructing a mathematical model to relate the response from a sample scanned using an analytical instrument to the properties of the samples. Any calibration model that can be clearly defined in a mathematical expression and gives suitable results can be used. Record the spectra of a suitable number of representative samples with known or future-established values of the attribute of interest throughout the range to be measured (for example, content of water). The number of samples for calibration will depend on the complexity of the sample matrix and interferences (e.g. temperature, particle size, etc.). All samples must give quantitative results within a calibration interval as defined by the intended purpose of the method. Multiple linear regression (MLR), principal component regression (PCR) and partial least squares regression (PLS) are commonly used algorithms. For PLS or PCR calibrations, the regression coefficients and/or the loadings should be plotted and the regions of large coefficients or loadings compared with the spectrum of the analyte. Predicted residual error sum of squares (PRESS) plots (or similar) are useful to facilitate the optimising of the number of PCR or PLS factors.

Pre-treatment of data. Wavelength selection or excluding certain wavelength ranges may enhance the accuracy and robustness of calibration models. Wavelength compression (wavelength averaging) techniques may be applied to the data.

Model validation parameters. Analytical performance characteristics to be considered for demonstrating the validation of NIR methods are similar to those required for any analytical procedure. Specific acceptance criteria for each validation parameter must be consistent with the intended use of the method. Validation parameters for quantitative methods are accuracy, linearity, precision (repeatability and intermediate precision), robustness and specificity.

ONGOING MODEL EVALUATION

NIR models validated for use are subjected to ongoing performance evaluation and monitoring of validation parameters.

TRANSFER OF DATABASES

When databases are transferred to another instrument, spectral range, number of data points, spectral resolution and other parameters have to be taken into consideration. Further procedures and criteria must be applied to demonstrate that the model remains valid with the new database or new instrument.

01/2008:20241

2.2.41. CIRCULAR DICHROISM

The difference in absorbance of optically active substances within an absorption band for left and right circularly polarised light is referred to as circular dichroism.

Direct measurement gives a mean algebraic value:

$$\Delta A = A_L - A_R$$

ΔA = circular dichroic absorbance,

A_L = absorbance of left circularly polarised light,

A_R = absorbance of right circularly polarised light.

Circular dichroism is calculated using the equation:

$$\Delta\varepsilon = \varepsilon_L - \varepsilon_R = \frac{\Delta A}{c \times l}$$

$\Delta\varepsilon$ = molar circular dichroism or molar differential dichroic absorptivity expressed in litre·mole^{-1}·cm^{-1},

ε_L = molar absorptivity (*2.2.25*) of left circularly polarised light,

ε_R = molar absorptivity of right circularly polarised light,

c = concentration of the test solution in mole·litre^{-1},

l = optical path of the cell in centimetres.

The following units may also be used to characterise circular dichroism:

Dissymmetry factor:

$$g = \frac{\Delta\varepsilon}{\varepsilon}$$

ε = molar absorptivity (*2.2.25*).

Molar ellipticity:

Certain types of instruments display directly the value of ellipticity Θ, expressed in degrees. When such instruments are used, the molar ellipticity [Θ] may be calculated using the following equation:

$$[\Theta] = \frac{\Theta \times M}{c \times l \times 10}$$

[Θ] = molar ellipticity, expressed in degrees·cm^2·decimole^{-1},

Θ = value of ellipticity given by the instrument,

M = relative molecular mass of the substance to be examined,

c = concentration of the solution to be examined in g/mL,

l = optical path of the cell in centimetres.

Molar ellipticity is also related to molar circular dichroism by the following equation:

$$[\Theta] = 2.303\Delta\varepsilon\frac{4500}{\pi} \approx 3300\Delta\varepsilon$$

Molar ellipticity is often used in the analysis of proteins and nucleic acids. In this case, molar concentration is expressed in terms of monomeric residue, calculated using the expression:

$$\frac{\text{molecular mass}}{\text{number of amino acids}}$$

The mean relative molecular mass of the monomeric residue is 100 to 120 (generally 115) for proteins and about 330 for nucleic acids (as the sodium salt).

Apparatus. The light source (S) is a xenon lamp (Figure 2.2.41.-1); the light passes through a double monochromator (M) equipped with quartz prisms (P1, P2).

The linear beam from the first monochromator is split into 2 components polarised at right angles in the second monochromator. The exit slit of the monochromator eliminates the extraordinary beam.

The polarised and monochromatic light passes through a birefringent modulator (Cr): the result is alternating circularly polarised light.

The beam then passes through the sample to be examined (C) and reaches a photomultiplier (PM) followed by an amplifier circuit which produces 2 electrical signals: one is a direct current V_c and the other is an alternating current at the modulation frequency V_{ac} characteristic of the sample to be examined. The phase gives the sign of the circular dichroism.

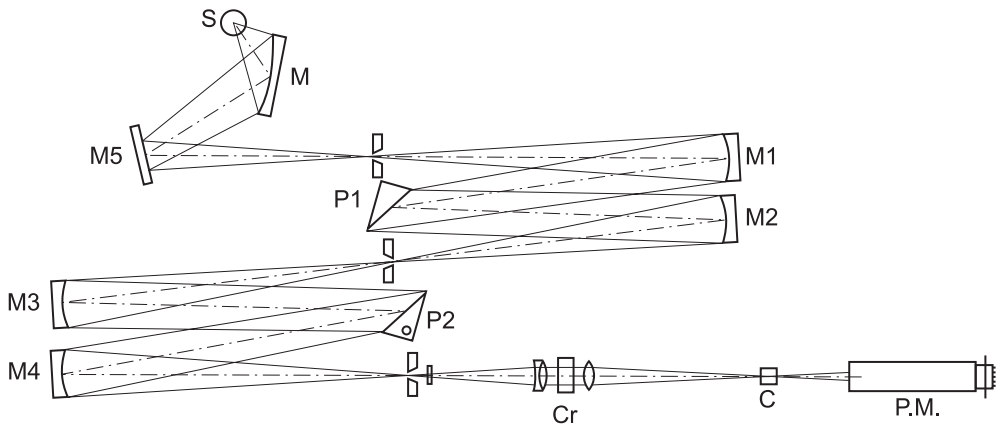

Figure 2.2.41.-1. – *Optical scheme of a dichrograph*

The ratio V_{ac}/V_c is proportional to the differential absorption ΔA which created the signal. The region of wavelengths normally covered by a dichrograph is 170 nm to 800 nm.

Calibration of the apparatus

Accuracy of absorbance scale. Dissolve 10.0 mg of *isoandrosterone R* in *dioxan R* and dilute to 10.0 mL with the same solvent. Record the circular dichroism spectrum of the solution between 280 nm and 360 nm. Measured at the maximum at 304 nm, $\Delta\varepsilon$ is + 3.3.

The solution of *(1S)-(+)-10-camphorsulfonic acid R* may also be used.

Linearity of modulation. Dissolve 10.0 mg of *(1S)-(+)-10-camphorsulfonic acid R* in *water R* and dilute to 10.0 mL with the same solvent. Determine the exact concentration of camphorsulfonic acid in the solution by ultraviolet spectrophotometry (*2.2.25*), taking the specific absorbance to be 1.49 at 285 nm.

Record the circular dichroism spectrum between 185 nm and 340 nm. Measured at the maximum at 290.5 nm, $\Delta\varepsilon$ is + 2.2 to + 2.5. Measured at the maximum at 192.5 nm, $\Delta\varepsilon$ is – 4.3 to – 5.

(1S)-(+)- or antipodal *(1R)-(–)-ammonium 10-camphorsulfonate R* can also be used.

01/2010:20242

2.2.42. DENSITY OF SOLIDS

The density of solids corresponds to their average mass per unit volume and typically is expressed in grams per cubic centimetre (g/cm^3) although the International Unit is the kilogram per cubic metre (1 g/cm^3 = 1000 kg/m^3).

Unlike gases and liquids whose density depends only on temperature and pressure, the density of a solid also depends on its assembly and therefore varies with the crystal structure and degree of crystallinity.

When a solid is amorphous or partially amorphous, its density may further depend upon the history of preparation, treatment and storage.

Therefore, unlike fluids, the densities of 2 chemically equivalent solids may be different, and this difference reflects a difference in solid-state structure. The density of constituent particles is an important physical characteristic of pharmaceutical powders.

The density of a solid particle can assume different values depending on the method used to measure the volume of the particle. It is useful to distinguish 3 levels of expression of density:

- the *true density*, which only includes the solid fraction of the material; in case of crystalline material, the true density is also called *crystal density*;
- the *particle density*, which also includes the volume due to intraparticulate pores;
- the *bulk density*, which further includes the interparticulate void volume formed in the powder bed.

TRUE DENSITY

The true density of a substance is the ratio of the mass to the volume of the unit cell, exclusive of all voids that are not a fundamental part of the molecular packing arrangement. It is an intrinsic property of the specified crystal structure of substance, and hence should be independent of the method of determination. The true density is determined by calculation.

It is obtained using crystallographic data (volume and composition of the unit cell) from, for example, X-ray diffraction data, either on a single crystal or by refinement of the crystalline structure from X-ray powder diffraction data.

PARTICLE DENSITY

The particle density takes into account both the true density and the intraparticulate porosity (sealed and/or experimentally non-accessible open pores). Thus, particle density depends on the value of the volume determined, which in turn depends on the method of measurement. The particle density can be determined using one of the 2 following methods.

The gas *pycnometric density* is determined by measuring the volume occupied by a known mass of powder, which is equivalent to the volume of gas displaced by the powder using a gas displacement pycnometer (*2.9.23*). In gas pycnometric density measurements, the volume determined excludes the volume occupied by open pores; however, it includes the volume occupied by sealed pores or pores inaccessible to the gas. Due to the high diffusivity of helium, which is the preferred choice of gas, most open pores are accessible to the gas. Therefore, the gas pycnometric density of a finely milled powder is generally not very different from the true density. Hence, this density is the best estimate of the true density of an amorphous or partially crystalline sample and is therefore widely applicable for processed pharmaceutical powder samples.

The *mercury porosimeter density* is also called *granular density*. With this method the volume determined includes the volume occupied by sealed pores or pores inaccessible to mercury; however, it includes the volume only from open pores smaller than some size limit. This pore-size limit or minimal access diameter depends on the maximal mercury intrusion pressure applied during the measurement, and under normal operating pressures the mercury does not penetrate the finest pores accessible to helium. Various granular densities can be obtained from one sample since, for each applied mercury intrusion pressure, a density can be determined that corresponds to the pore-size limit at that pressure.

BULK AND TAPPED DENSITY

The bulk density of a powder includes the contribution of interparticulate void volume. Hence, the bulk density depends on both the density of powder particles and the spatial arrangement of particles in the powder bed.

The bulk density of a powder is often very difficult to measure with good reproducibility since the slightest disturbance of the bed may result in a new density. Thus, it is essential in reporting bulk density to specify how the determination was made.

The bulk density and the tapped density are determined as mentioned in chapter *2.9.34. Bulk density and tapped density*.

01/2008:20243

2.2.43. MASS SPECTROMETRY

Mass spectrometry is based on the direct measurement of the ratio of the mass to the number of positive or negative elementary charges of ions (*m*/*z*) in the gas phase obtained from the substance to be analysed. This ratio is expressed in atomic mass units (1 a.m.u. = one twelfth the mass of ^{12}C) or in daltons (1 Da = the mass of the hydrogen atom).

The ions, produced in the ion *source* of the apparatus, are accelerated and then separated by the *analyser* before reaching the *detector*. All of these operations take place in a chamber where a pumping system maintains a vacuum of 10^{-3} to 10^{-6} Pa.

The resulting spectrum shows the relative abundance of the various ionic species present as a function of *m*/*z*. The signal corresponding to an ion will be represented by several peaks corresponding to the statistical distribution of the various isotopes of that ion. This pattern is called the *isotopic profile* and (at least for small molecules) the peak representing the most abundant isotopes for each atom is called the *monoisotopic peak*.

Information obtained in mass spectrometry is essentially qualitative (determination of the molecular mass, information on the structure from the fragments observed) or quantitative (using internal or external standards) with limits of detection ranging from the picomole to the femtomole.

INTRODUCTION OF THE SAMPLE

The very first step of an analysis is the introduction of the sample into the apparatus without overly disturbing the vacuum. In a common method, called *direct liquid introduction*, the sample is placed on the end of a cylindrical rod (in a quartz crucible, on a filament or on a metal surface). This rod is introduced into the spectrometer after passing through a vacuum lock where a primary intermediate vacuum is maintained between atmospheric pressure and the secondary vacuum of the apparatus.

Other introduction systems allow the components of a mixture to be analysed as they are separated by an appropriate apparatus connected to the mass spectrometer.

Gas chromatography/mass spectrometry. The use of suitable columns (capillary or semi-capillary) allows the end of the column to be introduced directly into the source of the apparatus without using a separator.

Liquid chromatography/mass spectrometry. This combination is particularly useful for the analysis of polar compounds, which are insufficiently volatile or too heat-labile to be analysed by gas chromatography coupled with mass spectrometry. This method is complicated by the difficulty of obtaining ions in the gas phase from a liquid phase, which requires very special interfaces such as:

- *direct liquid introduction*: the mobile phase is nebulised, and the solvent is evaporated in front of the ion source of the apparatus,
- *particle-beam interface*: the mobile phase, which may flow at a rate of up to 0.6 mL/min, is nebulised in a desolvation chamber such that only the analytes, in neutral form, reach the ion source of the apparatus; this technique is used for compounds of relatively low polarity with molecular masses of less than 1000 Da,
- *moving-belt interface*: the mobile phase, which may flow at a rate of up to 1 mL/min, is applied to the surface of a moving belt; after the solvent evaporates, the components to be analysed are successively carried to the ion source of the apparatus where they are ionised; this technique is rather poorly suited to very polar or heat-labile compounds.

Other types of coupling (electrospray, thermospray, atmospheric-pressure chemical ionisation) are considered to be ionisation techniques in their own right and are described in the section on modes of ionisation.

Supercritical fluid chromatography/mass spectrometry. The mobile phase, usually consisting of supercritical carbon dioxide enters the gas state after passing a heated restrictor between the column and the ion source.

Capillary electrophoresis/mass spectrometry. The eluent is introduced into the ion source, in some cases after adding another solvent so that flow rates of the order of a few microlitres per minute can be attained. This technique is limited by the small quantities of sample introduced and the need to use volatile buffers.

MODES OF IONISATION

Electron impact. The sample, in the gas state, is ionised by a beam of electrons whose energy (usually 70 eV) is greater than the ionisation energy of the sample. In addition to the molecular ion M^+, fragments characteristic of the molecular structure are observed. This technique is limited mainly by the need to vaporise the sample. This makes it unsuited to polar, heat-labile or high molecular mass compounds. Electron impact is compatible with the coupling of gas chromatography to mass spectrometry and sometimes with the use of liquid chromatography.

Chemical ionisation. This type of ionisation involves a reagent gas such as methane, ammonia, nitrogen oxide, nitrogen dioxide or oxygen. The spectrum is characterised by ions of the $(M + H)^+$ or $(M - H)^-$ types, or adduct ions formed from the analyte and the gas used. Fewer fragments are produced than with electron impact. A variant of this technique is used when the substance is heat-labile: the sample, applied to a filament, is very rapidly vaporised by the Joule-Thomson effect (desorption chemical ionisation).

Fast-atom bombardment (FAB) or fast-ion bombardment ionisation (liquid secondary-ion mass spectrometry LSIMS). The sample, dissolved in a viscous matrix such as glycerol, is applied to a metal surface and ionised by a beam of neutral atoms such as argon or xenon or high-kinetic-energy caesium ions. Ions of the $(M + H)^+$ or $(M - H)^-$ types or adduct ions formed from the matrix or the sample are produced. This type of ionisation, well suited to polar and heat-labile compounds, allows molecular masses of up to 10 000 Da to be obtained. The technique can be combined with liquid chromatography by adding 1 per cent to 2 per cent of glycerol to the mobile phase; however, the flow rates must be very low (a few microlitres per minute). These ionisation techniques also allow thin-layer chromatography plates to be analysed by applying a thin layer of matrix to the surface of these plates.

Field desorption and field ionisation. The sample is vaporised near a tungsten filament covered with microneedles (*field ionisation*) or applied to this filament (*field desorption*). A voltage of about 10 kV, applied between this filament and a counter-electrode, ionises the sample. These two techniques mainly produce molecular ions M^+, and $(M + H)^+$ ions and are used for low polarity and/or heat-labile compounds.

Matrix-assisted laser desorption ionisation (MALDI). The sample, in a suitable matrix and deposited on a metal support, is ionised by a pulsed laser beam whose wavelength may range from UV to IR (impulses lasting from a picosecond to a few nanoseconds). This mode of ionisation plays an essential role in the analysis of very high molecular mass compounds (more than 100 000 Da) but is limited to time-of flight analysers (see below).

Electrospray. This mode of ionisation is carried out at atmospheric pressure. The samples, in solution, are introduced into the source through a capillary tube, the end of which has a potential of the order of 5 kV. A gas can be used to facilitate nebulisation. Desolvation of the resulting microdroplets produces singly or multiply charged ions in the gas phase. The flow rates vary from a few microlitres per minute to 1 mL/min. This technique is suited to polar compounds and to the investigation of biomolecules with molecular masses of up to 100 000 Da. It can be coupled to liquid chromatography or capillary electrophoresis.

Atmospheric-pressure chemical ionisation (APCI). Ionisation is carried out at atmospheric pressure by the action of an electrode maintained at a potential of several kilovolts and placed in the path of the mobile phase, which is nebulised both by thermal effects and by the use of a stream of nitrogen. The resulting ions carry a single charge and are of the $(M + H)^+$ type in the positive mode and of the $(M - H)^-$ type in the negative mode. The high flow rates that can be used with this mode of ionisation (up to 2 mL/min) make this an ideal technique for coupling to liquid chromatography.

Thermospray. The sample, in the mobile phase consisting of water and organic modifiers and containing a volatile electrolyte (generally ammonium acetate) is introduced in nebulised form after having passed through a metal capillary tube at controlled temperature. Acceptable flow rates are of the order of 1 mL/min to 2 mL/min. The ions of the electrolyte ionise the compounds to be analysed. This ionisation process may be replaced or enhanced by an electrical discharge of about 800 volts, notably when the solvents are entirely organic. This technique is compatible with the use of liquid chromatography coupled with mass spectrometry.

ANALYSERS

Differences in the performance of analysers depend mainly on two parameters:

- the range over which *m/z* ratios can be measured, ie, the *mass range*,
- their *resolving power* characterised by the ability to separate two ions of equal intensity with *m/z* ratios differing by ΔM, and whose overlap is expressed as a given percentage of valley definition; for example, a resolving power ($M/\Delta M$) of 1000 with 10 per cent valley definition allows the separation of *m/z* ratios of 1000 and 1001 with the intensity returning to 10 per cent above baseline. However, the resolving power may in some cases (time-of-flight analysers, quadrupoles, ion-trap analysers) be defined as the ratio between the molecular mass and peak width at half height (50 per cent valley definition).

Magnetic and electrostatic analysers. The ions produced in the ion source are accelerated by a voltage *V*, and focused towards a magnetic analyser (magnetic field *B*) or an electrostatic analyser (electrostatic field *E*), depending on the configuration of the instrument. They follow a trajectory of radius *r* according to Laplace's law:

$$\frac{m}{z} = \frac{B^2 r^2}{2V}$$

Two types of scans can be used to collect and measure the various ions produced by the ion source: a scan of *B* holding *V* fixed or a scan of *V* with constant *B*. The magnetic analyser is usually followed by an electric sector that acts as a kinetic energy filter and allows the resolving power of the instrument to be increased appreciably. The maximum resolving power of such an instrument (double sector) ranges from 10 000 to 150 000 and in most cases allows the value of *m/z* ratios to be calculated accurately enough to determine the elemental composition of the corresponding ions. For monocharged ions, the mass range is from 2000 Da to 15 000 Da. Some ions may decompose spontaneously (metastable transitions) or by colliding with a gas (collision-activated dissociation (CAD)) in field-free regions between the ion source and the detector. Examination of these decompositions is very useful for the determination of the structure as well as the characterisation of a specific compound in a mixture and involves tandem mass spectrometry. There are many such techniques depending on the region where these decompositions occur:

- *daughter-ion mode* (determination of the decomposition ions of a given parent ion): B/E = constant, *MIKES (Mass-analysed Ion Kinetic Energy Spectroscopy)*,
- *parent-ion mode* (determination of all ions which by decomposition give an ion with a specific *m/z* ratio): B^2/E = constant,
- *neutral-loss mode* (detection of all the ions that lose the same fragment):

  $B/E(1 - E/E_0)^{1/2}$ = constant, where E_0 is the basic voltage of the electric sector.

Quadrupoles. The analyser consists of four parallel metal rods, which are cylindrical or hyperbolic in cross-section. They are arranged symmetrically with respect to the trajectory of the ions; the pairs diagonally opposed about the axis of symmetry of rods are connected electrically. The potentials to the two pairs of rods are opposed. They are the resultant of a constant component and an alternating component. The ions produced at the ion source are transmitted and separated by varying the voltages applied to the rods so that the ratio of continuous voltage to alternating voltage remains constant. The quadrupoles usually have a mass range of 1 a.m.u. to 2000 a.m.u., but some may range up to 4000 a.m.u. Although they have a lower resolving power than magnetic sector analysers, they nevertheless allow the monoisotopic profile of single charged ions to be obtained for the entire mass range. It is possible to obtain spectra using three quadrupoles arranged in series, Q_1, Q_2, Q_3 (Q_2 serves as a collision cell and is not really an analyser; the most commonly used collision gas is argon).

The most common types of scans are the following:

- *daughter-ion mode*: Q_1 selects an *m/z* ion whose fragments obtained by collision in Q_2 are analysed by Q_3,
- *parent-ion mode*: Q_3 filters only a specific *m/z* ratio, while Q_1 scans a given mass range. Only the ions decomposing to give the ion selected by Q_3 are detected,
- *neutral loss mode*: Q_1 and Q_3 scan a certain mass range but at an offset corresponding to the loss of a fragment characteristic of a product or family of compounds.

It is also possible to obtain spectra by combining quadrupole analysers with magnetic or electrostatic sector instruments; such instruments are called *hybrid mass spectrometers*.

Ion-trap analyser. The principle is the same as for a quadrupole, this time with the electric fields in three dimensions. This type of analyser allows product-ion spectra over several generations (MS^n) to be obtained.

Ion-cyclotron resonance analysers. Ions produced in a cell and subjected to a uniform, intense magnetic field move in circular orbits at frequencies which can be directly correlated to their *m/z* ratio by applying a Fourier transform algorithm. This phenomenon is called ion-cyclotron resonance. Analysers of this type consist of superconducting magnets and are capable of very high resolving power (up to 1000 000 and more) as well as MS^n spectra. However, very low pressures are required (of the order of 10^{-7} Pa).

Time-of-flight analysers. The ions produced at the ion source are accelerated at a voltage *V* of 10 kV to 20 kV. They pass through the analyser, consisting of a field-free tube, 25 cm to 1.5 m long, generally called a *flight tube*. The time (*t*) for an ion to travel to the detector is proportional to the square root of the *m*/*z* ratio. Theoretically the mass range of such an analyser is infinite. In practice, it is limited by the ionisation or desorption method. Time-of-flight analysers are mainly used for high molecular mass compounds (up to several hundred thousand daltons). This technique is very sensitive (a few picomoles of product are sufficient). The accuracy of the measurements and the resolving power of such instruments may be improved considerably by using an electrostatic mirror (reflectron).

SIGNAL ACQUISITION

There are essentially three possible modes.

Complete spectrum mode. The entire signal obtained over a chosen mass range is recorded. The spectrum represents the relative intensity of the different ionic species present as a function of *m*/*z*. The results are essentially qualitative. The use of spectral reference libraries for more rapid identification is possible.

Fragmentometric mode (Selected-ion monitoring). The acquired signal is limited to one (single-ion monitoring (SIM)) or several (multiple-ion monitoring (MIM)) ions characteristic of the substance to be analysed. The limit of detection can be considerably reduced in this mode. Quantitative or semiquantitative tests can be carried out using external or internal standards (for example, deuterated standards). Such tests cannot be carried out with time-of-flight analysers.

Fragmentometric double mass spectrometry mode (multiple reaction monitoring (MRM)). The unimolecular or bimolecular decomposition of a chosen precursor ion characteristic of the substance to be analysed is followed specifically. The selectivity and the highly specific nature of this mode of acquisition provide excellent sensitivity levels and make it the most appropriate for quantitative studies using suitable internal standards (for example, deuterated standards). This type of analysis can be performed only on apparatus fitted with three quadrupoles in series, ion-trap analysers or cyclotron-resonance analysers.

CALIBRATION

Calibration allows the corresponding *m*/*z* value to be attributed to the detected signal. As a general rule, this is done using a reference substance. This calibration may be external (acquisition file separate from the analysis) or internal (the reference substance(s) are mixed with the substance to be examined and appear on the same acquisition file). The number of ions or points required for reliable calibration depends on the type of analyser and on the desired accuracy of the measurement, for example, in the case of a magnetic analyser where the *m*/*z* ratio varies exponentially with the value of the magnetic field, there should be as many points as possible.

SIGNAL DETECTION AND DATA PROCESSING

Ions separated by an analyser are converted into electric signals by a detection system such as a photomultiplier or an electron multiplier. These signals are amplified before being re-converted into digital signals for data processing, allowing various functions such as calibration, reconstruction of spectra, automatic quantification, archiving, creation or use of libraries of mass spectra. The various physical parameters required for the functioning of the apparatus as a whole are controlled by computer.

01/2008:20244

2.2.44. TOTAL ORGANIC CARBON IN WATER FOR PHARMACEUTICAL USE

Total organic carbon (TOC) determination is an indirect measure of organic substances present in water for pharmaceutical use. TOC determination can also be used to monitor the performance of various operations in the preparation of medicines.

A variety of acceptable methods is available for determining TOC. Rather than prescribing a given method to be used, this general chapter describes the procedures used to qualify the chosen method and the interpretation of results in limit tests. A standard solution is analysed at suitable intervals, depending on the frequency of measurements; the solution is prepared with a substance that is expected to be easily oxidisable (for example, sucrose) at a concentration adjusted to give an instrument response corresponding to the TOC limit to be measured. The suitability of the system is determined by analysis of a solution prepared with a substance expected to be oxidisable with difficulty (for example, 1,4-benzoquinone).

The various types of apparatus used to measure TOC in water for pharmaceutical use have in common the objective of completely oxidising the organic molecules in the sample water to produce carbon dioxide followed by measurement of the amount of carbon dioxide produced, the result being used to calculate the carbon concentration in the water.

The apparatus used must discriminate between organic and inorganic carbon, the latter being present as carbonate. The discrimination may be effected either by measuring the inorganic carbon and subtracting it from the total carbon, or by purging inorganic carbon from the sample before oxidisation. Purging may also entrain organic molecules, but such purgeable organic carbon is present in negligible quantities in water for pharmaceutical use.

Apparatus. Use a calibrated instrument installed either on-line or off-line. Verify the system suitability at suitable intervals as described below. The apparatus must have a limit of detection specified by the manufacturer of 0.05 mg or less of carbon per litre.

TOC water. Use highly purified water complying with the following specifications:

- conductivity: not greater than 1.0 $\mu S \cdot cm^{-1}$ at 25 °C,
- total organic carbon: not greater than 0.1 mg/L.

Depending on the type of apparatus used, the content of heavy metals and copper may be critical. The manufacturer's instructions should be followed.

Glassware preparation. Use glassware that has been scrupulously cleaned by a method that will remove organic matter. Use *TOC water* for the final rinse of glassware.

Standard solution. Dissolve *sucrose R*, dried at 105 °C for 3 h in *TOC water* to obtain a solution containing 1.19 mg of sucrose per litre (0.50 mg of carbon per litre).

Test solution. Using all due care to avoid contamination, collect water to be tested in an airtight container leaving minimal head-space. Examine the water with minimum delay to reduce contamination from the container and its closure.

System suitability solution. Dissolve *1,4-benzoquinone R* in *TOC water* to obtain a solution having a concentration of 0.75 mg of 1,4-benzoquinone per litre (0.50 mg of carbon per litre).

TOC water control. Use *TOC water* obtained at the same time as that used to prepare the standard solution and the system suitability solution.

Control solutions. In addition to the *TOC water control*, prepare suitable blank solutions or other solutions needed for establishing the baseline or for calibration adjustments following the manufacturer's instructions; run the appropriate blanks to zero the instrument.

System suitability. Run the following solutions and record the responses: *TOC water* (r_w); *standard solution* (r_s); *system suitability solution* (r_{ss}). Calculate the percentage response efficiency using the expression:

$$\frac{r_{ss} - r_w}{r_s - r_w} \times 100$$

The system is suitable if the response efficiency is not less than 85 per cent and not more than 115 per cent of the theoretical response.

Procedure. Run the test solution and record the response (r_u). The test solution complies with the test if r_u is not greater than $r_s - r_w$.

The method can also be applied using on-line instrumentation that has been adequately calibrated and shown to have acceptable system suitability. The location of instrumentation must be chosen to ensure that the responses are representative of the water used.

01/2008:20245

2.2.45. SUPERCRITICAL FLUID CHROMATOGRAPHY

Supercritical fluid chromatography (SFC) is a method of chromatographic separation in which the mobile phase is a fluid in a supercritical or a subcritical state. The stationary phase, contained in a column, consists of either finely divided solid particles, such as a silica or porous graphite, a chemically modified stationary phase, as used in liquid chromatography, or, for capillary columns, a cross-linked liquid film evenly coated on the walls of the column.

SFC is based on mechanisms of adsorption or mass distribution.

APPARATUS

The apparatus usually consists of a cooled pumping system, an injector, a chromatographic column, contained in an oven, a detector, a pressure regulator and a data acquisition device (or an integrator or a chart recorder).

Pumping system

Pumping systems are required to deliver the mobile phase at a constant flow rate. Pressure fluctuations are to be minimised, e.g. by passing the pressurised solvent through a pulse-damping device. Tubing and connections are capable of withstanding the pressures developed by the pumping system.

Microprocessor controlled systems are capable of accurately delivering a mobile phase in either constant or varying conditions, according to a defined programme. In the case of gradient elution, pumping systems which deliver solvent(s) from several reservoirs are available and solvent mixing can be achieved on either the low or high-pressure side of the pump(s).

Injectors

Injection may be carried out directly at the head of the column using a valve.

Stationary phases

Stationary phases are contained in columns which have been described in the chapters on *Liquid chromatography* (*2.2.29*) (packed columns) and *Gas chromatography* (*2.2.28*) (capillary columns). A capillary column has a maximum internal diameter (Ø) of 100 µm.

Mobile phases

Usually the mobile phase is carbon-dioxide which may contain a polar modifier such as methanol, 2-propanol or acetonitrile. The composition, pressure (density), temperature and flow rate of the prescribed mobile phase may either be constant throughout the whole chromatographic procedure (isocratic, isodense, isothermic elution) or may vary according to a defined programme (gradient elution of the modifier, pressure (density), temperature or flow rate).

Detectors

Ultraviolet/visible (UV/Vis) spectrophotometers and flame ionisation detectors are the most commonly employed detectors. Light scattering detectors, infrared absorption spectrophotometers, thermal conductivity detectors or other special detectors may be used.

METHOD

Prepare the test solution(s) and the reference solution(s) as prescribed. The solutions must be free from solid particles.

Criteria for assessing the suitability of the system are described in the chapter on *Chromatographic separation techniques* (*2.2.46*). The extent to which adjustments of parameters of the chromatographic system can be made to satisfy the criteria of system suitability are also given in this chapter.

04/2009:20246

2.2.46. CHROMATOGRAPHIC SEPARATION TECHNIQUES

Chromatographic separation techniques are multi-stage separation methods in which the components of a sample are distributed between 2 phases, one of which is stationary, while the other is mobile. The stationary phase may be a solid or a liquid supported on a solid or a gel. The stationary phase may be packed in a column, spread as a layer, or distributed as a film, etc. The mobile phase may be gaseous or liquid or supercritical fluid. The separation may be based on adsorption, mass distribution (partition), ion-exchange, etc., or may be based on differences in the physico-chemical properties of the molecules such as size, mass, volume, etc.

This chapter contains definitions and calculations of common parameters and generally applicable requirements for system suitability. Principles of separation, apparatus and methods are given in the following general methods:

- paper chromatography (*2.2.26*);
- thin-layer chromatography (*2.2.27*);
- gas chromatography (*2.2.28*);
- liquid chromatography (*2.2.29*);
- size-exclusion chromatography (*2.2.30*);
- supercritical fluid chromatography (*2.2.45*).

DEFINITIONS

The system suitability and acceptance criteria in monographs have been set using parameters as defined below. With some equipment, certain parameters, such as the signal-to-noise ratio and resolution, can be calculated using software provided by the manufacturer. It is the responsibility of the user to ensure that the calculation methods used in the software are equivalent to the requirements of the European Pharmacopoeia and to make any necessary corrections if this is not the case.

Chromatogram

A graphical or other representation of detector response, effluent concentration or other quantity used as a measure of effluent concentration, versus time or volume. Idealised chromatograms are represented as a sequence of Gaussian peaks on a baseline (Figure 2.2.46.-1).

Peak

The portion of a chromatogram recording the detector response when a single component (or 2 or more unresolved components) is eluted from the column.

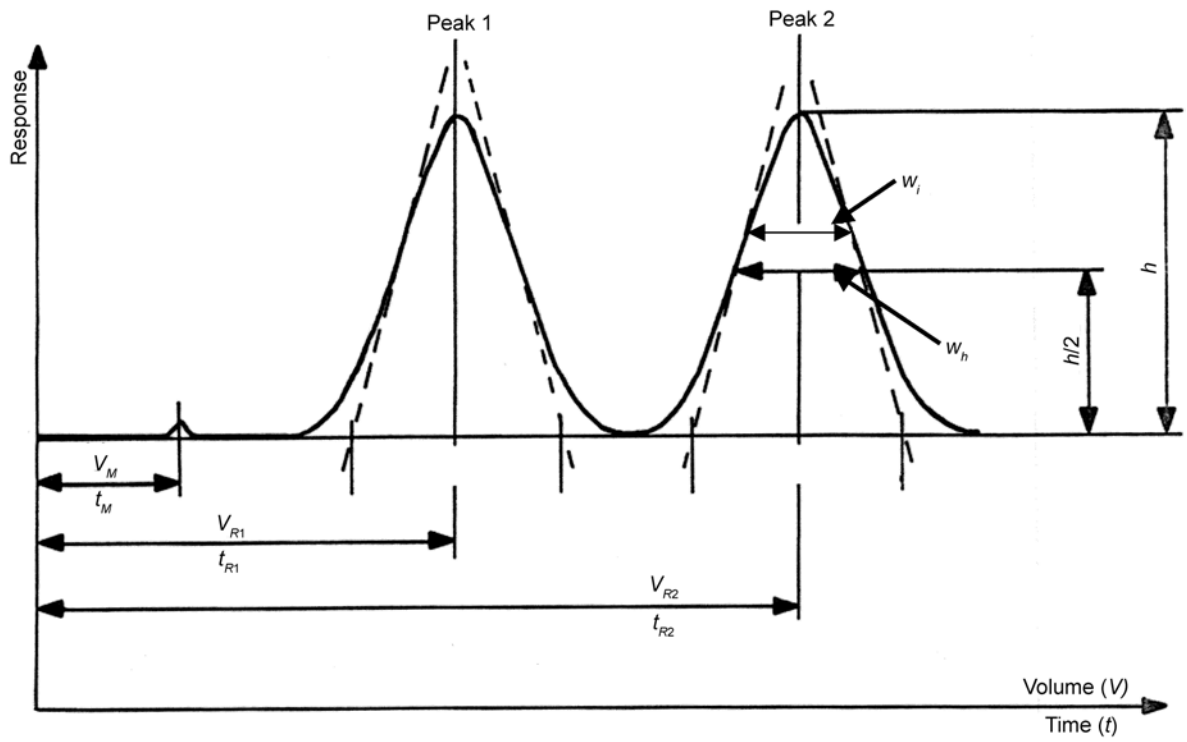

Figure 2.2.46.-1.

The peak may be defined by the peak area, or the peak height (h) and the peak width at half-height (w_h), or the peak height (h) and the peak width between the points of inflection (w_i). In Gaussian peaks (Figure 2.2.46.-1) there is the following relationship:

$$w_h = 1.18 w_i$$

Retention time (t_R)

Time required for elution of a component (Figure 2.2.46.-1, baseline scale being in minutes).

Retention volume (V_R)

Volume of the mobile phase required for elution of a component. It may be calculated from the retention time and the flow rate (F) in millilitres per minute using the following equation:

$$V_R = t_R \times F$$

Hold-up time (t_M)

Time required for elution of an unretained component (Figure 2.2.46.-1, baseline scale being in minutes). In size-exclusion chromatography, the symbol t_0 (see below) is used.

Hold-up volume (V_M)

Volume of the mobile phase required for elution of an unretained component. It may be calculated from the hold-up time and the flow rate (F) in millilitres per minute using the following equation:

$$V_M = t_M \times F$$

In size-exclusion chromatography, the symbol V_0 (see below) is used.

Retention factor (k)

The retention factor (also known as mass distribution ratio (D_m) or capacity factor (k')) is defined as:

$$k = \frac{\text{amount of component in stationary phase}}{\text{amount of component in mobile phase}} = K_C \frac{V_s}{V_M}$$

K_C = distribution constant (also known as equilibrium distribution coefficient);

V_S = volume of the stationary phase;

V_M = volume of the mobile phase.

The retention factor of a component may be determined from the chromatogram using the following equation:

$$k = \frac{t_R - t_M}{t_M}$$

Total mobile phase time (t_t)

In size-exclusion chromatography, retention time of a component whose molecules are smaller than the smallest gel pores (Figure 2.2.46.-2).

Total mobile phase volume (V_t)

In size-exclusion chromatography, retention volume of a component whose molecules are smaller than the smallest gel pores. It may be calculated from the total mobile phase time and the flow rate (F) in millilitres per minute using the following equation:

$$V_t = t_t \times F$$

Retention time of an unretained compound (t_0)

In size-exclusion chromatography, retention time of a component whose molecules are larger than the largest gel pores (Figure 2.2.46.-2).

Retention volume of an unretained compound (V_0)

In size-exclusion chromatography, retention volume of a component whose molecules are larger than the largest gel pores. It may be calculated from the retention time of an

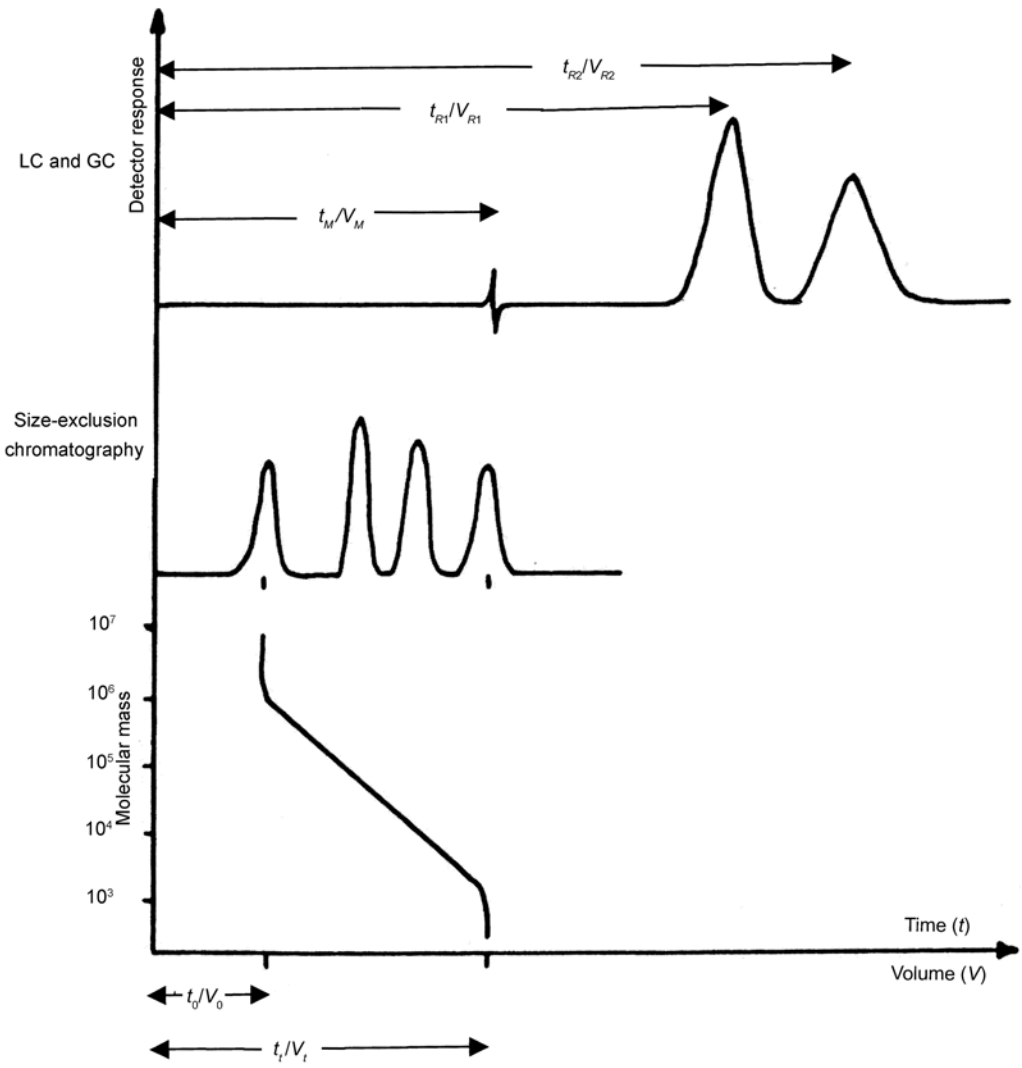

Figure 2.2.46.-2.

unretained compound and the flow rate (F) in millilitres per minute using the following equation:

$$V_0 = t_0 \times F$$

Distribution constant (K_0)

In size-exclusion chromatography, the elution characteristics of a component in a particular column may be given by the distribution constant (also referred to as distribution coefficient), which is calculated using the following equation:

$$K_0 = \frac{t_R - t_0}{t_t - t_0}$$

Retardation factor (R_F)

The retardation factor (also known as retention factor (R_f)), used in planar chromatography, is the ratio of the distance from the point of application to the centre of the spot and the distance travelled by the solvent front from the point of application (Figure 2.2.46.-3).

$$R_F = \frac{b}{a}$$

b = migration distance of the component;

a = migration distance of the solvent front.

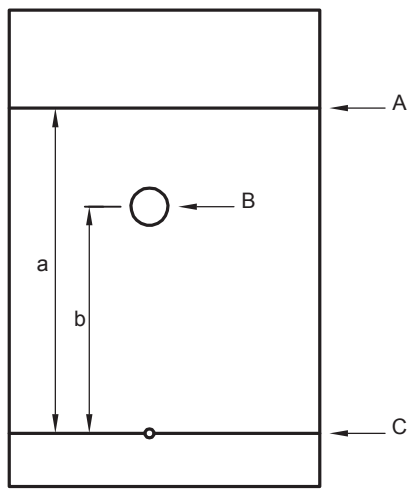

A. mobile phase front B. spot C. line of application

Figure 2.2.46.-3.

Plate number (N)

The column performance (apparent efficiency) may be calculated from data obtained under either isothermal, isocratic or isodense conditions, depending on the technique, as the plate number (also referred to as number of

theoretical plates), using the following equation, the values of t_R and w_h being expressed in the same units:

$$N = 5.54 \left(\frac{t_R}{w_h} \right)^2$$

t_R = retention time of the peak corresponding to the component;

w_h = width of the peak at half-height.

The plate number varies with the component as well as with the column, the column temperature, the mobile phase and the retention time.

Dwell volume (*D*)

The dwell volume (also known as gradient delay volume) is the volume between the point at which the eluents meet and the top of the column. It can be determined using the following procedure.

Column: replace the chromatographic column by an appropriate capillary tubing (e.g. 1 m × 0.12 mm).

Mobile phase:

- *mobile phase A*: *water R*;
- *mobile phase B*: 0.1 per cent *V/V* solution of *acetone R*;

Time (min)	Mobile phase A (per cent *V/V*)	Mobile phase B (per cent *V/V*)
0 - 20	100 → 0	0 → 100
20 - 30	0	100

Flow rate: set to obtain sufficient back-pressure (e.g. 2 mL/min).

Detection: spectrophotometer at 265 nm.

Determine the time ($t_{0.5}$) in minutes when the absorbance has increased by 50 per cent (Figure 2.2.46.-4).

$$D = t_D \times F$$

t_D = $t_{0.5} - 0.5t_G$ (in minutes);

t_G = pre-defined gradient time (= 20 min);

F = flow rate (in millilitres per minute).

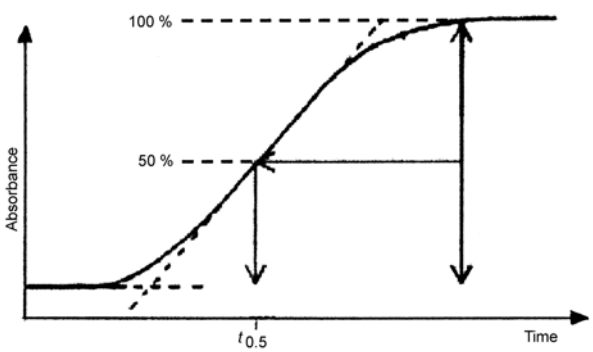

Figure 2.2.46.-4

Symmetry factor (A_s)

The symmetry factor of a peak (Figure 2.2.46.-5) is calculated using the following equation:

$$A_s = \frac{w_{0.05}}{2d}$$

$w_{0.05}$ = width of the peak at one-twentieth of the peak height;

d = distance between the perpendicular dropped from the peak maximum and the leading edge of the peak at one-twentieth of the peak height.

An A_s value of 1.0 signifies symmetry. When $A_s > 1.0$, the peak is tailing. When $A_s < 1.0$, the peak is fronting.

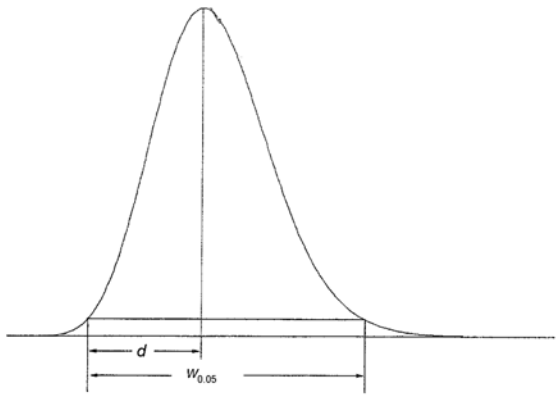

Figure 2.2.46.-5

Resolution (R_s)

The resolution between peaks of 2 components (Figure 2.2.46.-1) may be calculated using the following equation:

$$R_s = \frac{1.18\,(t_{R2} - t_{R1})}{w_{h1} + w_{h2}}$$

$t_{R2} > t_{R1}$

t_{R1}, t_{R2} = retention times of the peaks;

w_{h1}, w_{h2} = peak widths at half-height.

In quantitative planar chromatography, using densitometry, the migration distances are used instead of retention times and the resolution between peaks of 2 components may be calculated using the following equation:

$$R_s = \frac{1.18a\,(R_{F2} - R_{F1})}{w_{h1} + w_{h2}}$$

R_{F1}, R_{F2} = retardation factors of the peaks;

w_{h1}, w_{h2} = peak widths at half-height;

a = migration distance of the solvent front.

Peak-to-valley ratio (*p/v*)

The peak-to-valley ratio may be employed as a system suitability criterion in a test for related substances when baseline separation between 2 peaks is not achieved (Figure 2.2.46.-6).

$$p/v = \frac{H_p}{H_v}$$

H_p = height above the extrapolated baseline of the minor peak;

H_v = height above the extrapolated baseline at the lowest point of the curve separating the minor and major peaks.

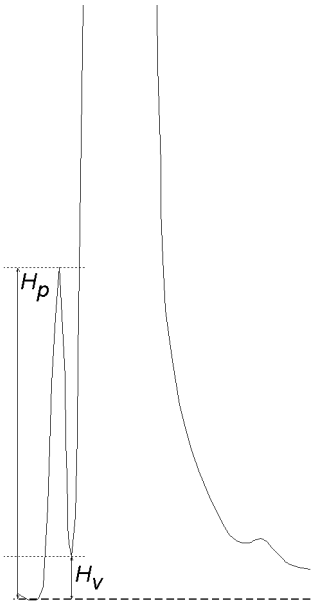

Figure 2.2.46.-6

Relative retention (*r*)

Relative retention is calculated as an estimate using the following equation:

$$r = \frac{t_{Ri} - t_M}{t_{Rst} - t_M}$$

t_{Ri} = retention time of the peak of interest;

t_{Rst} = retention time of the reference peak (usually the peak corresponding to the substance to be examined);

t_M = hold-up time.

The unadjusted relative retention (r_G) is calculated using the following equation:

$$r_G = \frac{t_{Ri}}{t_{Rst}}$$

Unless otherwise indicated, values for relative retention stated in monographs correspond to unadjusted relative retention.

In planar chromatography, the retardation factors R_{Fst} and R_{Fi} are used instead of t_{Rst} and t_{Ri}.

Signal-to-noise ratio (*S/N*)

The short-term noise influences the precision of quantification. The signal-to-noise ratio is calculated using the following equation:

$$S/N = \frac{2H}{h}$$

H = height of the peak (Figure 2.2.46.-7) corresponding to the component concerned, in the chromatogram obtained with the prescribed reference solution, measured from the maximum of the peak to the extrapolated baseline of the signal observed over a distance equal to at least 5 times the width at half-height;

h = range of the noise in a chromatogram obtained after injection or application of a blank, observed over a distance equal to at least 5 times the width at half-height of the peak in the chromatogram obtained with the prescribed reference solution and, if possible, situated equally around the place where this peak would be found.

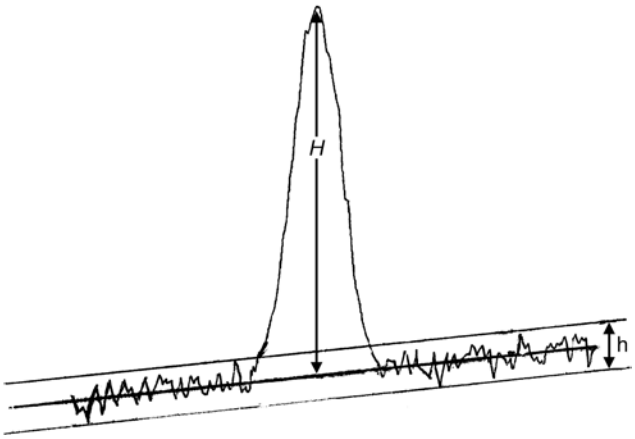

Figure 2.2.46.-7.

System repeatability

The repeatability of response is expressed as an estimated percentage relative standard deviation (s_r(%)) of a consecutive series of measurements for not fewer than 3 injections or applications of a reference solution, and is calculated using the following equation:

$$s_r\,(\%) = \frac{100}{\overline{y}}\sqrt{\frac{\sum (y_i - \overline{y})^2}{n-1}}$$

y_i = individual values expressed as peak area, peak height, or ratio of areas by the internal standardisation method;

$\overline{y}$ = mean of individual values;

n = number of individual values.

SYSTEM SUITABILITY

The various components of the equipment employed must be qualified and be capable of achieving the performance required to conduct the test or assay.

The system suitability tests represent an integral part of the method and are used to ensure adequate performance of the chromatographic system. Apparent efficiency, retention factor (mass distribution ratio), resolution, relative retention and symmetry factor are the parameters that are usually employed in assessing the performance of the column. Factors that may affect the chromatographic behaviour include:

- the composition, ionic strength, temperature and apparent pH of the mobile phase;
- flow rate, column dimensions, column temperature and pressure;
- stationary phase characteristics including type of chromatographic support (particle-based or monolithic), particle or macropore size, porosity, specific surface area;
- reversed-phase and other surface-modification of the stationary phases, the extent of chemical modification (as expressed by end-capping, carbon loading etc.).

The following requirements and any supplementary requirements given in the individual monograph are to be fulfilled unless otherwise prescribed:

- in a related substances test or assay, for a peak in the chromatogram obtained with a reference solution used for quantification, the symmetry factor is 0.8 to 1.5, unless otherwise prescribed;
- in an assay of an active substance where the value is 100 per cent for a pure substance, the maximum permitted relative standard deviation ($s_r(\%)_{max}$) for the defined limits is calculated for a series of injections of the reference solution using the following equation:

$$s_r\,(\%)_{max} = \frac{KB\sqrt{n}}{t_{90\%,n-1}}$$

K = constant (0.349), obtained from the expression $K = \frac{0.6}{\sqrt{2}} \times \frac{t_{90\%,5}}{\sqrt{6}}$ in which $\frac{0.6}{\sqrt{2}}$ represents the required percentage relative standard deviation after 6 injections for $B = 1.0$;

B = upper limit given in the definition of the individual monograph minus 100 per cent;

n = number of replicate injections of the reference solution ($3 \leq n \leq 6$);

$t_{90\%,n-1}$ = Student's t at the 90 per cent probability level (double sided) with n–1 degrees of freedom.

Unless otherwise prescribed, the maximum permitted relative standard deviation does not exceed the appropriate value given in Table 2.2.46.-1. This requirement does not apply to tests for related substances.

Table 2.2.46.-1. – *Repeatability requirements*

	Number of individual injections			
	3	4	5	6
B **(per cent)**	**Maximum permitted relative standard deviation**			
2.0	0.41	0.59	0.73	0.85
2.5	0.52	0.74	0.92	1.06
3.0	0.62	0.89	1.10	1.27

– in a related substances test, the limit of quantification (corresponding to a signal-to-noise ratio of 10) is equal to or less than the disregard limit.

Compliance with the system suitability criteria is required throughout the chromatographic procedure. Depending on various factors, such as the frequency of use of the procedure and experience with the chromatographic system, the analyst chooses an appropriate verification scheme to monitor this.

ADJUSTMENT OF CHROMATOGRAPHIC CONDITIONS

The extent to which the various parameters of a chromatographic test may be adjusted to satisfy the system suitability criteria without fundamentally modifying the methods are listed below. Adjustment of conditions with gradient elutions is more critical than with isocratic elutions, since it may lead to shifts in peaks to a different step of the gradient, thus leading to the incorrect assignment of peaks, and to the masking of peaks or a shift such that elution occurs beyond the prescribed elution time. Changes other than those indicated require revalidation of the method. The chromatographic conditions described have been validated during the elaboration of the monograph.

The system suitability tests are included to verify that the separation required for satisfactory performance of the test or assay is achieved. Nonetheless, since the stationary phases are described in a general way and there is such a variety available commercially, with differences in chromatographic behaviour, some adjustments of the chromatographic conditions may be necessary to achieve the prescribed system suitability requirements. With reversed-phase liquid chromatographic methods in particular, adjustment of the various parameters will not always result in satisfactory chromatography. In that case, it may be necessary to replace the column with another of the same type (e.g. octadecylsilyl silica gel), which exhibits the desired chromatographic behaviour. The Knowledge database on the EDQM website usually contains information on the column(s) used during monograph elaboration.

For critical parameters the adjustments are defined clearly in the monograph to ensure the system suitability.

Thin-layer chromatography and paper chromatography

Composition of the mobile phase: the amount of the minor solvent component may be adjusted by ± 30 per cent relative or ± 2 per cent absolute, whichever is the larger; for a minor component at 10 per cent of the mobile phase, a 30 per cent relative adjustment allows a range of 7-13 per cent whereas a 2 per cent absolute adjustment allows a range of 8-12 per cent, the relative value therefore being the larger; for a minor component at 5 per cent of the mobile phase, a 30 per cent relative adjustment allows a range of 3.5-6.5 per cent whereas a 2 per cent absolute adjustment allows a range of 3-7 per cent, the absolute value being the larger in this case; no other component is altered by more than 10 per cent absolute.

pH of the aqueous component of the mobile phase: ± 0.2 pH, unless otherwise prescribed, or ± 1.0 pH when non-ionisable substances are to be examined.

Concentration of salts in the buffer component of a mobile phase: ± 10 per cent.

Application volume: 10-20 per cent of the prescribed volume if using fine particle size plates (2-10 µm).

Liquid chromatography: isocratic elution

Composition of the mobile phase: the amount of the minor solvent component may be adjusted by ± 30 per cent relative or ± 2 per cent absolute, whichever is the larger (see example above); no other component is altered by more than 10 per cent absolute.

pH of the aqueous component of the mobile phase: ± 0.2 pH, unless otherwise prescribed, or ± 1.0 pH when non-ionisable substances are to be examined.

Concentration of salts in the buffer component of a mobile phase: ± 10 per cent.

Flow rate: ± 50 per cent; a larger adjustment is acceptable when changing the column dimensions (see the formula below).

Column parameters

Stationary phase:

– no change of the identity of the substituent of the stationary phase permitted (e.g. no replacement of C18 by C8);

– *particle size*: maximum reduction of 50 per cent; no increase permitted.

Column dimensions:

– *length*: ± 70 per cent;

– *internal diameter*: ± 25 per cent.

When column dimensions are changed, the flow rate may be adjusted as necessary using the following equation:

$$F_2 = F_1 \frac{l_2 d_2^2}{l_1 d_1^2}$$

F_1 = flow rate indicated in the monograph, in millilitres per minute;

F_2 = adjusted flow rate, in millilitres per minute;

l_1 = length of the column indicated in the monograph, in millimetres;

l_2 = length of the column used, in millimetres;

d_1 = internal diameter of the column indicated in the monograph, in millimetres;

d_2 = internal diameter of the column used, in millimetres.

Temperature: ± 10 °C, where the operating temperature is specified, unless otherwise prescribed.

Detector wavelength: no adjustment permitted.

Injection volume: may be decreased, provided detection and repeatability of the peak(s) to be determined are satisfactory; no increase permitted.

Liquid chromatography: gradient elution

Adjustment of chromatographic conditions for gradient systems requires greater caution than for isocratic systems.

Composition of the mobile phase/gradient elution: minor adjustments of the composition of the mobile phase and the gradient are acceptable provided that:

- the system suitability requirements are fulfilled;
- the principal peak(s) elute(s) within ± 15 per cent of the indicated retention time(s);
- the final composition of the mobile phase is not weaker in elution power than the prescribed composition.

Where compliance with the system suitability requirements cannot be achieved, it is often preferable to consider the dwell volume or to change the column.

Dwell volume. The configuration of the equipment employed may significantly alter the resolution, retention time and relative retentions described. Should this occur, it may be due to excessive dwell volume. Monographs preferably include an isocratic step before the start of the gradient programme so that an adaptation can be made to the gradient time points to take account of differences in dwell volume between the system used for method development and that actually used. It is the user's responsibility to adapt the length of the isocratic step to the analytical equipment used. If the dwell volume used during the elaboration of the monograph is given in the monograph, the time points (t min) stated in the gradient table may be replaced by adapted time points (t_c min), calculated using the following equation:

$$t_c = t - \frac{(D - D_0)}{F}$$

D = dwell volume, in millilitres;

D_0 = dwell volume used for development of the method, in millilitres;

F = flow rate, in millilitres per minute.

The isocratic step introduced for this purpose may be omitted if validation data for application of the method without this step is available.

pH of the aqueous component of the mobile phase: no adjustment permitted.

Concentration of salts in the buffer component of a mobile phase: no adjustment permitted.

Flow rate: adjustment is acceptable when changing the column dimensions (see the formula below).

Column parameters

Stationary phase:

- no change of the identity of the substituent of the stationary phase permitted (e.g. no replacement of C18 by C8);
- *particle size*: no adjustment permitted.

Column dimensions:

- *length*: ± 70 per cent;
- *internal diameter*: ± 25 per cent.

When column dimensions are changed, the flow rate may be adjusted as necessary using the following equation:

$$F_2 = F_1 \frac{l_2 d_2^2}{l_1 d_1^2}$$

F_1 = flow rate indicated in the monograph, in millilitres per minute;

F_2 = adjusted flow rate, in millilitres per minute;

l_1 = length of the column indicated in the monograph, in millimetres;

l_2 = length of the column used, in millimetres;

d_1 = internal diameter of the column indicated in the monograph, in millimetres;

d_2 = internal diameter of the column used, in millimetres.

Temperature: ± 5 °C, where the operating temperature is specified, unless otherwise prescribed.

Detector wavelength: no adjustment permitted.

Injection volume: may be decreased, provided detection and repeatability of the peak(s) to be determined are satisfactory; no increase permitted.

Gas chromatography

Column parameters

Stationary phase:

- *particle size*: maximum reduction of 50 per cent; no increase permitted (packed columns);
- *film thickness*: – 50 per cent to + 100 per cent (capillary columns).

Column dimensions:

- *length*: ± 70 per cent;
- *internal diameter*: ± 50 per cent.

Flow rate: ± 50 per cent.

Temperature: ± 10 per cent.

Injection volume and split volume: may be adjusted, provided detection and repeatability are satisfactory.

Supercritical fluid chromatography

Composition of the mobile phase: for packed columns, the amount of the minor solvent component may be adjusted by ± 30 per cent relative or ± 2 per cent absolute, whichever is the larger; no adjustment is permitted for a capillary column system.

Detector wavelength: no adjustment permitted.

Column parameters

Stationary phase:

- *particle size*: maximum reduction of 50 per cent; no increase permitted (packed columns).

Column dimensions:

- *length*: ± 70 per cent;
- *internal diameter*:
  ± 25 per cent (packed columns);
  ± 50 per cent (capillary columns).

Flow rate: ± 50 per cent.

Temperature: ± 5 °C, where the operating temperature is specified.

Injection volume: may be decreased, provided detection and repeatability are satisfactory; no increase permitted.

QUANTIFICATION

Peaks due to solvents and reagents or arising from the mobile phase or the sample matrix are disregarded during quantification.

- *Detector sensitivity.* The detector sensitivity is the signal output per unit concentration or unit mass of a substance in the mobile phase entering the detector. The relative detector response factor, commonly referred to as *response factor*, expresses the sensitivity of a detector for a given substance relative to a standard substance. The *correction factor* is the reciprocal of the response factor.
- *External standard method.* The concentration of the component(s) to be analysed is determined by comparing the response(s) (peak(s)) obtained with the test solution to the response(s) (peak(s)) obtained with a reference solution.

- *Internal standard method.* Equal amounts of a component that will be resolved from the substance to be examined (the internal standard) are introduced into the test solution and a reference solution. The internal standard is chosen such that it does not react with the substance to be examined, is stable and does not contain impurities with the same retention time as that of the substance to be examined. The concentration of the substance to be examined is determined by comparing the ratio of the peak areas or peak heights due to the substance to be examined and the internal standard in the test solution with the ratio of the peak areas or peak heights due to the substance to be examined and the internal standard in the reference solution.

- *Normalisation procedure.* The percentage content of a component of the substance to be examined is calculated by determining the area of the corresponding peak as a percentage of the total area of all the peaks, excluding those due to solvents or reagents or arising from the mobile phase or the sample matrix, and those at or below the disregard limit.

- *Calibration procedure.* The relationship between the measured or evaluated signal (y) and the quantity (concentration, mass, etc.) of substance (x) is determined and the calibration function is calculated. The analytical results are calculated from the measured signal or evaluated signal of the analyte by means of the inverse function.

In tests for related substances for both the external standard method, when a dilution of the test solution is used for comparison, and the normalisation procedure, any correction factors indicated in the monograph are applied (i.e. when the response factor is outside the range 0.8-1.2).

When the related substances test prescribes the total of impurities or there is a quantitative determination of an impurity, it is important to choose an appropriate threshold setting and appropriate conditions for the integration of the peak areas. In such tests the *disregard limit*, i.e. the limit at or below which a peak is disregarded, is generally 0.05 per cent. Thus, the threshold setting of the data collection system corresponds to at least half of the disregard limit. Integration of the peak area of any impurity that is not completely separated from the principal peak is preferably performed by valley-to-valley extrapolation (tangential skim).

01/2010:20247
corrected 7.1

2.2.47. CAPILLARY ELECTROPHORESIS[5]

GENERAL PRINCIPLES

Capillary electrophoresis is a physical method of analysis based on the migration, inside a capillary, of charged analytes dissolved in an electrolyte solution, under the influence of a direct-current electric field.

The migration velocity of an analyte under an electric field of intensity E, is determined by the electrophoretic mobility of the analyte and the electro-osmotic mobility of the buffer inside the capillary. The electrophoretic mobility of a solute (μ_{ep}) depends on the characteristics of the solute (electric charge, molecular size and shape) and those of the buffer in which the migration takes place (type and ionic strength of the electrolyte, pH, viscosity and additives). The electrophoretic velocity (v_{ep}) of a solute, assuming a spherical shape, is given by the equation:

$$\nu_{ep} = \mu_{ep} \times E = \left(\frac{q}{6\pi\eta r}\right) \times \left(\frac{V}{L}\right)$$

q = effective charge of the solute,

η = viscosity of the electrolyte solution,

r = Stoke's radius of the solute,

V = applied voltage,

L = total length of the capillary.

When an electric field is applied through the capillary filled with buffer, a flow of solvent is generated inside the capillary, called electro-osmotic flow. The velocity of the electro-osmotic flow depends on the electro-osmotic mobility (μ_{eo}) which in turn depends on the charge density on the capillary internal wall and the buffer characteristics. The electro-osmotic velocity (v_{eo}) is given by the equation:

$$\nu_{eo} = \mu_{eo} \times E = \left(\frac{\varepsilon\zeta}{\eta}\right) \times \left(\frac{V}{L}\right)$$

ε = dielectric constant of the buffer,

ζ = zeta potential of the capillary surface.

The velocity of the solute (v) is given by:

$$\nu = \nu_{ep} + \nu_{eo}$$

The electrophoretic mobility of the analyte and the electro-osmotic mobility may act in the same direction or in opposite directions, depending on the charge of the solute. In normal capillary electrophoresis, anions will migrate in the opposite direction to the electro-osmotic flow and their velocities will be smaller than the electro-osmotic velocity. Cations will migrate in the same direction as the electro-osmotic flow and their velocities will be greater than the electro-osmotic velocity. Under conditions in which there is a fast electro-osmotic velocity with respect to the electrophoretic velocity of the solutes, both cations and anions can be separated in the same run.

The time (t) taken by the solute to migrate the distance (l) from the injection end of the capillary to the detection point (capillary effective length) is given by the expression:

$$t = \frac{l}{\nu_{ep} + \nu_{eo}} = \frac{l \times L}{(\mu_{ep} + \mu_{eo}) \times V}$$

In general, uncoated fused-silica capillaries above pH 3 have negative charge due to ionised silanol groups in the inner wall. Consequently, the electro-osmotic flow is from anode to cathode. The electro-osmotic flow must remain constant from run to run if good reproducibility is to be obtained in the migration velocity of the solutes. For some applications, it may be necessary to reduce or suppress the electro-osmotic flow by modifying the inner wall of the capillary or by changing the concentration, composition and/or pH of the buffer solution.

After the introduction of the sample into the capillary, each analyte ion of the sample migrates within the background electrolyte as an independent zone, according to its electrophoretic mobility. Zone dispersion, that is

(5) This chapter has undergone pharmacopoeial harmonisation. See chapter *5.8. Pharmacopoeial harmonisation*.

the spreading of each solute band, results from different phenomena. Under ideal conditions the sole contribution to the solute-zone broadening is molecular diffusion of the solute along the capillary (longitudinal diffusion). In this ideal case the efficiency of the zone, expressed as the number of theoretical plates (N), is given by:

$$N = \frac{(\mu_{ep} + \mu_{eo}) \times V \times l}{2 \times D \times L}$$

D = molecular diffusion coefficient of the solute in the buffer.

In practice, other phenomena such as heat dissipation, sample adsorption onto the capillary wall, mismatched conductivity between sample and buffer, length of the injection plug, detector cell size and unlevelled buffer reservoirs can also significantly contribute to band dispersion.

Separation between 2 bands (expressed as the resolution, R_s) can be obtained by modifying the electrophoretic mobility of the analytes, the electro-osmotic mobility induced in the capillary and by increasing the efficiency for the band of each analyte, according to the equation:

$$R_s = \frac{\sqrt{N}\,(\mu_{epb} - \mu_{epa})}{4\,(\overline{\mu}_{ep} + \mu_{eo})}$$

μ_{epa} and μ_{epb} = electrophoretic mobilities of the 2 analytes separated,

$\overline{\mu}_{ep}$ = mean electrophoretic mobility of the 2 analytes $\overline{\mu}_{ep} = \frac{1}{2}(\mu_{epb} + \mu_{epa})$.

APPARATUS

An apparatus for capillary electrophoresis is composed of:

- a high-voltage, controllable direct-current power supply;
- 2 buffer reservoirs, held at the same level, containing the prescribed anodic and cathodic solutions;
- 2 electrode assemblies (the cathode and the anode), immersed in the buffer reservoirs and connected to the power supply;
- a separation capillary (usually made of fused-silica) which, when used with some specific types of detectors, has an optical viewing window aligned with the detector. The ends of the capillary are placed in the buffer reservoirs. The capillary is filled with the solution prescribed in the monograph;
- a suitable injection system;
- a detector able to monitor the amount of substances of interest passing through a segment of the separation capillary at a given time; it is usually based on absorption spectrophotometry (UV and visible) or fluorimetry, but conductimetric, amperometric or mass spectrometric detection can be useful for specific applications; indirect detection is an alternative method used to detect non-UV-absorbing and non-fluorescent compounds;
- a thermostatic system able to maintain a constant temperature inside the capillary is recommended to obtain a good separation reproducibility;
- a recorder and a suitable integrator or a computer.

The definition of the injection process and its automation are critical for precise quantitative analysis. Modes of injection include gravity, pressure or vacuum injection and electrokinetic injection. The amount of each sample component introduced electrokinetically depends on its electrophoretic mobility, leading to possible discrimination using this injection mode.

Use the capillary, the buffer solutions, the preconditioning method, the sample solution and the migration conditions prescribed in the monograph of the considered substance. The employed electrolytic solution is filtered to remove particles and degassed to avoid bubble formation that could interfere with the detection system or interrupt the electrical contact in the capillary during the separation run. A rigorous rinsing procedure should be developed for each analytical method to achieve reproducible migration times of the solutes.

CAPILLARY ZONE ELECTROPHORESIS

PRINCIPLE

In capillary zone electrophoresis, analytes are separated in a capillary containing only buffer without any anticonvective medium. With this technique, separation takes place because the different components of the sample migrate as discrete bands with different velocities. The velocity of each band depends on the electrophoretic mobility of the solute and the electro-osmotic flow in the capillary (see General Principles). Coated capillaries can be used to increase the separation capacity of those substances adsorbing on fused-silica surfaces.

Using this mode of capillary electrophoresis, the analysis of both small (M_r < 2000) and large molecules (2000 < M_r < 100 000) can be accomplished. Due to the high efficiency achieved in capillary zone electrophoresis, separation of molecules having only minute differences in their charge-to-mass ratio can be effected. This separation mode also allows the separation of chiral compounds by addition of chiral selectors to the separation buffer.

OPTIMISATION

Optimisation of the separation is a complex process where several separation parameters can play a major role. The main factors to be considered in the development of separations are instrumental and electrolytic solution parameters.

Instrumental parameters

Voltage. A Joule heating plot is useful in optimising the applied voltage and capillary temperature. Separation time is inversely proportional to applied voltage. However, an increase in the voltage used can cause excessive heat production, giving rise to temperature and, as a result thereof, viscosity gradients in the buffer inside the capillary. This effect causes band broadening and decreases resolution.

Polarity. Electrode polarity can be normal (anode at the inlet and cathode at the outlet) and the electro-osmotic flow will move toward the cathode. If the electrode polarity is reversed, the electro-osmotic flow is away from the outlet and only charged analytes with electrophoretic mobilities greater than the electro-osmotic flow will pass to the outlet.

Temperature. The main effect of temperature is observed on buffer viscosity and electrical conductivity, and therefore on migration velocity. In some cases, an increase in capillary temperature can cause a conformational change in proteins, modifying their migration time and the efficiency of the separation.

Capillary. The dimensions of the capillary (length and internal diameter) contribute to analysis time, efficiency of separations and load capacity. Increasing both effective length and total length can decrease the electric fields (working at constant voltage) which increases migration time. For a given buffer and electric field, heat dissipation, and hence sample band-broadening, depend on the internal diameter of the capillary. The latter also affects the detection limit, depending on the sample volume injected and the detection system employed.

Since the adsorption of the sample components on the capillary wall limits efficiency, methods to avoid these interactions should be considered in the development of a separation method. In the specific case of proteins, several strategies have been devised to avoid adsorption on the capillary wall. Some of these strategies (use of extreme pH and adsorption of positively charged buffer additives) only require modification of the buffer composition to prevent protein adsorption. In other strategies, the internal wall of the capillary is coated with a polymer, covalently bonded to the silica, that prevents interaction between the proteins and the negatively charged

silica surface. For this purpose, ready-to-use capillaries with coatings consisting of neutral-hydrophilic, cationic and anionic polymers are available.

Electrolytic solution parameters

Buffer type and concentration. Suitable buffers for capillary electrophoresis have an appropriate buffer capacity in the pH range of choice and low mobility to minimise current generation.

Matching buffer-ion mobility to solute mobility, whenever possible, is important for minimising band distortion. The type of sample solvent used is also important to achieve on-column sample focusing, which increases separation efficiency and improves detection.

An increase in buffer concentration (for a given pH) decreases electro-osmotic flow and solute velocity.

Buffer pH. The pH of the buffer can affect separation by modifying the charge of the analyte or additives, and by changing the electro-osmotic flow. In protein and peptide separation, changing the pH of the buffer from above to below the isoelectric point (pI) changes the net charge of the solute from negative to positive. An increase in the buffer pH generally increases the electro-osmotic flow.

Organic solvents. Organic modifiers (methanol, acetonitrile, etc.) may be added to the aqueous buffer to increase the solubility of the solute or other additives and/or to affect the degree of ionisation of the sample components. The addition of these organic modifiers to the buffer generally causes a decrease in the electro-osmotic flow.

Additives for chiral separations. For the separation of optical isomers, a chiral selector is added to the separation buffer. The most commonly used chiral selectors are cyclodextrins, but crown ethers, polysaccharides and proteins may also be used. Since chiral recognition is governed by the different interactions between the chiral selector and each of the enantiomers, the resolution achieved for the chiral compounds depends largely on the type of chiral selector used. In this regard, for the development of a given separation it may be useful to test cyclodextrins having a different cavity size (α-, β-, or γ-cyclodextrin) or modified cyclodextrins with neutral (methyl, ethyl, hydroxyalkyl, etc.) or ionisable (aminomethyl, carboxymethyl, sulfobutyl ether, etc.) groups. When using modified cyclodextrins, batch-to-batch variations in the degree of substitution of the cyclodextrins must be taken into account since it will influence the selectivity. Other factors controlling the resolution in chiral separations are concentration of chiral selector, composition and pH of the buffer and temperature. The use of organic additives, such as methanol or urea can also modify the resolution achieved.

CAPILLARY GEL ELECTROPHORESIS

PRINCIPLE

In capillary gel electrophoresis, separation takes place inside a capillary filled with a gel that acts as a molecular sieve. Molecules with similar charge-to-mass ratios are separated according to molecular size since smaller molecules move more freely through the network of the gel and therefore migrate faster than larger molecules. Different biological macromolecules (for example, proteins and DNA fragments), which often have similar charge-to-mass ratios, can thus be separated according to their molecular mass by capillary gel electrophoresis.

CHARACTERISTICS OF GELS

2 types of gels are used in capillary electrophoresis: permanently coated gels and dynamically coated gels. Permanently coated gels, such as cross-linked polyacrylamide, are prepared inside the capillary by polymerisation of the monomers. They are usually bonded to the fused-silica wall and cannot be removed without destroying the capillary. If the gels are used for protein analysis under reducing conditions, the separation buffer usually contains sodium dodecyl sulfate and the samples are denatured by heating in a mixture of sodium dodecyl sulfate and 2-mercaptoethanol or dithiothreitol before injection. When non-reducing conditions are used (for example, analysis of an intact antibody), 2-mercaptoethanol and dithiothreitol are not used. Separation in cross-linked gels can be optimised by modifying the separation buffer (as indicated in the capillary zone electrophoresis section) and controlling the gel porosity during the gel preparation. For cross-linked polyacrylamide gels, the porosity can be modified by changing the concentration of acrylamide and/or the proportion of cross-linker. As a rule, a decrease in the porosity of the gel leads to a decrease in the mobility of the solutes. Due to the rigidity of these gels, only electrokinetic injection can be used.

Dynamically coated gels are hydrophilic polymers, such as linear polyacrylamide, cellulose derivatives, dextran, etc., which can be dissolved in aqueous separation buffers giving rise to a separation medium that also acts as a molecular sieve. These separation media are easier to prepare than cross-linked polymers. They can be prepared in a vial and filled by pressure in a wall-coated capillary (with no electro-osmotic flow). Replacing the gel before every injection generally improves the separation reproducibility. The porosity of the gels can be increased by using polymers of higher molecular mass (at a given polymer concentration) or by decreasing the polymer concentration (for a given polymer molecular mass). A reduction in the gel porosity leads to a decrease in the mobility of the solute for the same buffer. Since the dissolution of these polymers in the buffer gives low viscosity solutions, both hydrodynamic and electrokinetic injection techniques can be used.

CAPILLARY ISOELECTRIC FOCUSING

PRINCIPLE

In isoelectric focusing, the molecules migrate under the influence of the electric field, so long as they are charged, in a pH gradient generated by ampholytes having pI values in a wide range (poly-aminocarboxylic acids), dissolved in the separation buffer.

The three basic steps of isoelectric focusing are loading, focusing and mobilisation.

Loading step. Two methods may be employed:

- loading in one step: the sample is mixed with ampholytes and introduced into the capillary either by pressure or vacuum;
- sequential loading: a leading buffer, then the ampholytes, then the sample mixed with ampholytes, again ampholytes alone and finally the terminating buffer are introduced into the capillary. The volume of the sample must be small enough not to modify the pH gradient.

Focusing step. When the voltage is applied, ampholytes migrate toward the cathode or the anode, according to their net charge, thus creating a pH gradient from anode (lower pH) to cathode (higher pH). During this step the components to be separated migrate until they reach a pH corresponding to their isoelectric point (pI) and the current drops to very low values.

Mobilisation step. If mobilisation is required for detection, use one of the following methods.

- in the first method, mobilisation is accomplished during the focusing step under the effect of the electro-osmotic flow; the electro-osmotic flow must be small enough to allow the focusing of the components;
- in the second method, mobilisation is accomplished by applying positive pressure after the focusing step;
- in the third method, mobilisation is achieved after the focusing step by adding salts to the cathode reservoir or the anode reservoir (depending on the direction chosen for mobilisation) in order to alter the pH in the capillary when the voltage is applied. As the pH is changed, the

proteins and ampholytes are mobilised in the direction of the reservoir which contains the added salts and pass the detector.

The separation achieved, expressed as ΔpI, depends on the pH gradient ($\mathrm{dpH/d}x$), the number of ampholytes having different pI values, the molecular diffusion coefficient (D), the intensity of the electric field (E) and the variation of the electrophoretic mobility of the analyte with the pH ($-\mathrm{d}\mu/\mathrm{dpH}$):

$$\Delta\mathrm{pI} = 3 \times \sqrt{\frac{D\,(\mathrm{dpH/d}x)}{E\,(-\mathrm{d}\mu/\mathrm{dpH})}}$$

OPTIMISATION

The main parameters to be considered in the development of separations are:

Voltage. Capillary isoelectric focusing utilises very high electric fields, 300 V/cm to 1000 V/cm in the focusing step.

Capillary. The electro-osmotic flow must be reduced or suppressed depending on the mobilisation strategy (see above). Coated capillaries tend to reduce the electro-osmotic flow.

Solutions. The anode buffer reservoir is filled with a solution with a pH lower than the pI of the most acidic ampholyte and the cathode reservoir is filled with a solution with a pH higher than the pI of the most basic ampholyte. Phosphoric acid for the anode and sodium hydroxide for the cathode are frequently used.

Addition of a polymer, such as methylcellulose, in the ampholyte solution tends to suppress convective forces (if any) and electro-osmotic flow by increasing the viscosity. Commercial ampholytes are available covering many pH ranges and may be mixed if necessary to obtain an expanded pH range. Broad pH ranges are used to estimate the isoelectric point whereas narrower ranges are employed to improve accuracy. Calibration can be done by correlating migration time with isoelectric point for a series of protein markers.

During the focusing step precipitation of proteins at their isoelectric point can be prevented, if necessary, using buffer additives such as glycerol, surfactants, urea or zwitterionic buffers. However, depending on the concentration, urea denatures proteins.

MICELLAR ELECTROKINETIC CHROMATOGRAPHY (MEKC)

PRINCIPLE

In micellar electrokinetic chromatography, separation takes place in an electrolyte solution which contains a surfactant at a concentration above the critical micellar concentration (*cmc*). The solute molecules are distributed between the aqueous buffer and the pseudo-stationary phase composed of micelles, according to the partition coefficient of the solute. The technique can therefore be considered as a hybrid of electrophoresis and chromatography. It is a technique that can be used for the separation of both neutral and charged solutes, maintaining the efficiency, speed and instrumental suitability of capillary electrophoresis. One of the most widely used surfactants in MEKC is the anionic surfactant sodium dodecyl sulfate, although other surfactants, for example cationic surfactants such as cetyltrimethylammonium salts, are also used.

The separation mechanism is as follows. At neutral and alkaline pH, a strong electro-osmotic flow is generated and moves the separation buffer ions in the direction of the cathode. If sodium dodecyl sulfate is employed as the surfactant, the electrophoretic migration of the anionic micelle is in the opposite direction, towards the anode. As a result, the overall micelle migration velocity is slowed down compared to the bulk flow of the electrolytic solution. In the case of neutral solutes, since the analyte can partition between the micelle and the aqueous buffer, and has no electrophoretic mobility, the analyte migration velocity will depend only on the partition coefficient between the micelle and the aqueous buffer. In the electropherogram, the peaks corresponding to each uncharged solute are always between that of the electro-osmotic flow marker and that of the micelle (the time elapsed between these two peaks is called the separation window). For electrically charged solutes, the migration velocity depends on both the partition coefficient of the solute between the micelle and the aqueous buffer, and on the electrophoretic mobility of the solute in the absence of micelle.

Since the mechanism in MEKC of neutral and weakly ionised solutes is essentially chromatographic, migration of the solute and resolution can be rationalised in terms of the retention factor of the solute (k'), also referred to as mass distribution ratio (D_m), which is the ratio of the number of moles of solute in the micelle to those in the mobile phase. For a neutral compound, k' is given by:

$$k' = \frac{t_R - t_0}{t_0 \times \left(1 - \dfrac{t_R}{t_{mc}}\right)} = K \times \frac{V_S}{V_M}$$

t_R = migration time of the solute,

t_0 = analysis time of an unretained solute (determined by injecting an electro-osmotic flow marker which does not enter the micelle, for instance methanol),

t_{mc} = micelle migration time (measured by injecting a micelle marker, such as Sudan III, which migrates while continuously associated in the micelle),

K = partition coefficient of the solute,

V_S = volume of the micellar phase,

V_M = volume of the mobile phase.

Likewise, the resolution between 2 closely-migrating solutes (R_s) is given by:

$$R_s = \frac{\sqrt{N}}{4} \times \frac{\alpha - 1}{\alpha} \times \frac{k'_b}{k'_b + 1} \times \frac{1 - \left(\dfrac{t_0}{t_{mc}}\right)}{1 + k'_a \times \left(\dfrac{t_0}{t_{mc}}\right)}$$

N = number of theoretical plates for one of the solutes,

α = selectivity,

k'_a and k'_b = retention factors for both solutes, respectively ($k'_b > k'_a$).

Similar, but not identical, equations give k' and R_s values for electrically charged solutes.

OPTIMISATION

The main parameters to be considered in the development of separations by MEKC are instrumental and electrolytic solution parameters.

Instrumental parameters

Voltage. Separation time is inversely proportional to applied voltage. However, an increase in voltage can cause excessive heat production that gives rise to temperature gradients and viscosity gradients of the buffer in the cross-section of the capillary. This effect can be significant with high conductivity buffers such as those containing micelles. Poor heat dissipation causes band broadening and decreases resolution.

Temperature. Variations in capillary temperature affect the partition coefficient of the solute between the buffer and the micelles, the critical micellar concentration and the viscosity of the buffer. These parameters contribute to the migration time of the solutes. The use of a good cooling system improves the reproducibility of the migration time for the solutes.

Capillary. As in capillary zone electrophoresis, the dimensions of the capillary (length and internal diameter) contribute to analysis time and efficiency of separations. Increasing both

effective length and total length can decrease the electric fields (working at constant voltage), increase migration time and improve the separation efficiency. The internal diameter controls heat dissipation (for a given buffer and electric field) and consequently the sample band broadening.

Electrolytic solution parameters

Surfactant type and concentration. The type of surfactant, in the same way as the stationary phase in chromatography, affects the resolution since it modifies separation selectivity. Also, the log k' of a neutral compound increases linearly with the concentration of surfactant in the mobile phase. Since resolution in MEKC reaches a maximum when k' approaches the value of $\sqrt{t_{mc}/t_0}$, modifying the concentration of surfactant in the mobile phase changes the resolution obtained.

Buffer pH. Although pH does not modify the partition coefficient of non-ionised solutes, it can modify the electro-osmotic flow in uncoated capillaries. A decrease in the buffer pH decreases the electro-osmotic flow and therefore increases the resolution of the neutral solutes in MEKC, resulting in a longer analysis time.

Organic solvents. To improve MEKC separation of hydrophobic compounds, organic modifiers (methanol, propanol, acetonitrile, etc.) can be added to the electrolytic solution. The addition of these modifiers usually decreases migration time and the selectivity of the separation. Since the addition of organic modifiers affects the critical micellar concentration, a given surfactant concentration can be used only within a certain percentage of organic modifier before the micellisation is inhibited or adversely affected, resulting in the absence of micelles and, therefore, in the absence of partition. The dissociation of micelles in the presence of a high content of organic solvent does not always mean that the separation will no longer be possible; in some cases the hydrophobic interaction between the ionic surfactant monomer and the neutral solutes forms solvophobic complexes that can be separated electrophoretically.

Additives for chiral separations. For the separation of enantiomers using MEKC, a chiral selector is included in the micellar system, either covalently bound to the surfactant or added to the micellar separation electrolyte. Micelles that have a moiety with chiral discrimination properties include salts of *N*-dodecanoyl-L-amino acids, bile salts, etc. Chiral resolution can also be achieved using chiral discriminators, such as cyclodextrins, added to the electrolytic solutions which contain micellised achiral surfactants.

Other additives. Several strategies can be carried out to modify selectivity, by adding chemicals to the buffer. The addition of several types of cyclodextrins to the buffer can also be used to reduce the interaction of hydrophobic solutes with the micelle, thus increasing the selectivity for this type of compound.

The addition of substances able to modify solute-micelle interactions by adsorption on the latter, is used to improve the selectivity of the separations in MEKC. These additives may be a second surfactant (ionic or non-ionic) which gives rise to mixed micelles or metallic cations which dissolve in the micelle and form co-ordination complexes with the solutes.

QUANTIFICATION

Peak areas must be divided by the corresponding migration time to give the corrected area in order to:

- compensate for the shift in migration time from run to run, thus reducing the variation of the response,
- compensate for the different responses of sample constituents with different migration times.

Where an internal standard is used, verify that no peak of the substance to be examined is masked by that of the internal standard.

CALCULATIONS

From the values obtained, calculate the content of the component or components being examined. When prescribed, the percentage content of one or more components of the sample to be examined is calculated by determining the corrected area(s) of the peak(s) as a percentage of the total of the corrected areas of all peaks, excluding those due to solvents or any added reagents (normalisation procedure). The use of an automatic integration system (integrator or data acquisition and processing system) is recommended.

SYSTEM SUITABILITY

In order to check the behaviour of the capillary electrophoresis system, system suitability parameters are used. The choice of these parameters depends on the mode of capillary electrophoresis used. They are: retention factor (k') (only for micellar electrokinetic chromatography), apparent number of theoretical plates (N), symmetry factor (A_s) and resolution (R_s). In previous sections, the theoretical expressions for N and R_s have been described, but more practical equations that allow these parameters to be calculated from the electropherograms are given below.

APPARENT NUMBER OF THEORETICAL PLATES

The apparent number of theoretical plates (N) may be calculated using the expression:

$$N = 5.54 \times \left(\frac{t_R}{w_h}\right)^2$$

t_R = migration time or distance along the baseline from the point of injection to the perpendicular dropped from the maximum of the peak corresponding to the component,

w_h = width of the peak at half-height.

RESOLUTION

The resolution (R_s) between peaks of similar height of 2 components may be calculated using the expression:

$$R_s = \frac{1.18 \times (t_{R2} - t_{R1})}{w_{h1} + w_{h2}}$$

$$t_{R2} > t_{R1}$$

t_{R1} and t_{R2} = migration times or distances along the baseline from the point of injection to the perpendiculars dropped from the maxima of two adjacent peaks,

w_{h1} and w_{h2} = peak widths at half-height.

When appropriate, the resolution may be calculated by measuring the height of the valley (H_v) between 2 partly resolved peaks in a standard preparation and the height of the smaller peak (H_p) and calculating the peak-to-valley ratio:

$$\frac{p}{v} = \frac{H_p}{H_v}$$

SYMMETRY FACTOR

The symmetry factor (A_s) of a peak may be calculated using the expression:

$$A_s = \frac{w_{0.05}}{2d}$$

$w_{0.05}$ = width of the peak at one-twentieth of the peak height,

d = distance between the perpendicular dropped from the peak maximum and the leading edge of the peak at one-twentieth of the peak height.

Tests for area repeatability (standard deviation of areas or of the area/migration-time ratio) and for migration time repeatability (standard deviation of migration time) are introduced as suitability parameters. Migration time

repeatability provides a test for the suitability of the capillary washing procedures. An alternative practice to avoid the lack of repeatability of the migration time is to use migration time relative to an internal standard.

A test for the verification of the signal-to-noise ratio for a standard preparation (or the determination of the limit of quantification) may also be useful for the determination of related substances.

SIGNAL-TO-NOISE RATIO

The detection limit and quantification limit correspond to signal-to-noise ratios of 3 and 10 respectively. The signal-to-noise ratio (S/N) is calculated using the expression:

$$\frac{S}{N} = \frac{2H}{h}$$

H = height of the peak corresponding to the component concerned, in the electropherogram obtained with the prescribed reference solution, measured from the maximum of the peak to the extrapolated baseline of the signal observed over a distance equal to twenty times the width at half-height,

h = range of the background in an electropherogram obtained after injection of a blank, observed over a distance equal to twenty times the width at the half-height of the peak in the electropherogram obtained with the prescribed reference solution and, if possible, situated equally around the place where this peak would be found.

01/2008:20248

2.2.48. RAMAN SPECTROMETRY

Raman spectrometry (inelastic light scattering) is a light-scattering process in which the specimen under examination is irradiated with intense monochromatic light (usually laser light) and the light scattered from the specimen is analysed for frequency shifts.

Raman spectrometry is complementary to infrared spectrometry in the sense that the two techniques both probe the molecular vibrations in a material. However, Raman and infrared spectrometry have different relative sensitivities for different functional groups. Raman spectrometry is particularly sensitive to non-polar bonds (e.g. C-C single or multiple bonds) and less sensitive to polar bonds. Hence, water, which has a strong infrared absorption spectrum, is a weak Raman scatterer and is thus well suited as a solvent for Raman spectrometry.

Apparatus: Spectrometers for recording Raman spectra typically consist of the following components:

- a monochromatic light source, typically a laser, with a wavelength in the ultraviolet, visible or near-infrared region,
- suitable optics (lens, mirrors or optical-fibre assembly) which directs the irradiating light to and collects the scattered light from the sample,
- an optical device (monochromator or filter) that transmits the frequency-shifted Raman scattering and prevents the intense incident frequency (Rayleigh scattering) from reaching the detector,
- a dispersing device (grating or prism monochromator) combined with wavelength-selecting slits and a detector (usually a photomultiplier tube),

  or:
- a dispersing device (grating or prism) combined with a multichannel detector (usually a charge-coupled device (CCD)),

  or:
- an interferometer with a detector that records the intensity of the scattered light over time, and a data-handling device that converts the data to the frequency or wavenumber domain by a Fourier-transform calculation.

PREPARATION OF THE SAMPLE

Raman spectra can be obtained from solids, liquids and gases either directly, or in glass containers or tubes, generally without prior sample preparation or dilution.

A major limitation of Raman spectrometry is that impurities may cause fluorescence that interferes with the detection of the much weaker Raman signal. Fluorescence may be avoided by choosing a laser source with a longer wavelength, for example in the near infrared, as the exciting line. The intensity of certain Raman lines may be enhanced in a number of ways, for instance in Resonance Raman (RR) and by Surface Enhanced Raman Spectrometry (SERS).

Due to the narrow focus of the irradiating laser beam, the spectrum is typically obtained from only a few microlitres of sample. Hence, sample inhomogeneities must be considered, unless the sample volume is increased, for example by rotation of the sample.

IDENTIFICATION AND QUANTITATION USING REFERENCE SUBSTANCES

Prepare the substance to be examined and the reference substance by the same procedure and record the spectra under the same operational conditions. The maxima in the spectrum obtained with the substance to be examined correspond in position and relative intensity to those in the spectrum obtained with the reference substance (CRS).

When the spectra recorded in the solid state show differences in the positions of the maxima, treat the substance to be examined and the reference substance in the same manner so that they crystallise or are produced in the same form, or proceed as described in the monograph, then record the spectra.

While Beer-Lambert's law is not valid for Raman spectrometry, Raman intensity is directly proportional to the concentration of the scattering species. As for other spectroscopic techniques, quantitation can be performed using known amounts or concentrations of reference substances. Owing to the small spatial resolution of the technique, care must be taken to ensure representative samples of standards and unknowns, for example by making sure that they are in the same physical state or by using an internal standard for liquid samples.

IDENTIFICATION AND QUANTITATION USING SPECTRAL LIBRARIES AND STATISTICAL METHODS FOR CLASSIFICATION AND CALIBRATION

Control of instrument performance. Use the apparatus according to the manufacturer's instructions and carry out the prescribed calibrations and system performance tests at regular intervals, depending on the use of the apparatus and the substances to be examined. When using Raman spectrometry for quantitative determinations, or when setting up spectral reference libraries for (chemometric) classification or calibration, particular care should be taken to ensure that corrections are made or measures are taken to control the variability in wavenumber and response-intensity of the instrumentation.

Verification of the wavenumber scale. Verify the wavenumber scale of the Raman shift (normally expressed in reciprocal centimetres) using a suitable standard which has characteristic maxima at the wavenumbers under investigation, for example, an organic substance, an Ne lamp or Ar^+ plasma lines from an argon-ion laser.

The calibration measurement should be matched to the sample type, i.e. a solid calibration sample should be used for solid samples and a liquid calibration sample for liquid samples. Choose a suitable substance (e.g. indene, cyclohexane or

naphthalene) for which accurate wavenumber shifts have been established (see Table 2.2.48.-1). The indene sample can favourably be placed in an NMR tube, evacuated and sealed under inert gas, and stored cool in the dark to avoid degradation of the sample.

Table 2.2.48.-1. – *Wavenumber shifts (and acceptable tolerances) of cyclohexane, indene and naphthalene.*

cyclohexane [A]	indene [B]	naphthalene [A]
		3056.4 (± 1.5)
2938.3 (± 1.5)		
2923.8 (± 1.5)		
2852.9 (± 1.5)		
	1609.7 (± 1.0)	1576.6 (± 1.0)
1444.4 (± 1.0)	1552.6 (± 1.0)	1464.5 (± 1.0)
1266.4 (± 1.0)	1205.2 (± 1.0)	1382.2 (± 1.0)
1157.6 (± 1.0)		1147.2 (± 1.0)
1028.3 (± 1.0)	1018.6 (± 1.0)	1021.6 (± 1.0)
801.3 (± 1.0)	730.5 (± 1.0)	763.8 (± 1.0)
	533.9 (± 1.0)	513.8 (± 1.0)

[A] *Standard guide for Raman shift standards for spectrometer calibration* (American Society for Testing and Materials ASTM E 1840).

[B] D. A. Carter, W. R. Thompson, C. E. Taylor and J. E. Pemberton, *Applied Spectroscopy*, 1995, 49 (11), 1561-1576.

Verification of the response-intensity scale. The absolute and relative intensities of the Raman bands are affected by several factors including:

- the state of polarisation of the irradiating light,
- the state of polarisation of the collection optics,
- the intensity of the irradiating light,
- differences in instrument response,
- differences in focus and geometry at sample,
- differences in packing density for solid samples.

Appropriate acceptance criteria will vary with the application but a day-to-day variation of ± 10 per cent in relative band intensities is achievable in most cases.

Establishment of a spectral reference library. Record the spectra of a suitable number of materials which have been fully tested (e.g. as prescribed in a monograph) and which exhibit the variation (manufacturer, batch, crystal modification, particle size, etc.) typical of the material to be analysed. The set of spectra represents the information that defines the similarity border or quantitative limits, which may be used, e.g. to identify the substance or control the amount formed in a manufacturing process. The number of substances in the database depends on the specific application. The collection of spectra in the database may be represented in different ways defined by the mathematical technique used for classification or quantitation.

The selectivity of the database which makes it possible to identify positively a given material and distinguish it adequately from other materials in the database is to be established during the validation procedure. This selectivity must be challenged on a regular basis to ensure ongoing validity of the database; this is especially necessary after any major change in a substance (e.g. change in supplier or in the manufacturing process of the material) or in the set-up of the Raman instrument (e.g. verification of the wavenumber and response repeatability of the spectrometer).

This database is then valid for use only with the originating instrument, or with a similar instrument, provided the transferred database has been demonstrated to remain valid.

Method. Prepare and examine the sample in the same manner as for the establishment of the database. A suitable mathematical transformation of the Raman spectrum may be calculated to facilitate spectrum comparison or quantitative prediction.

Comparison of the spectra or transforms of the spectra or quantitative prediction of properties or amounts in the material in question may involve the use of a suitable chemometric or statistical classification or calibration technique.

01/2008:20249

2.2.49. FALLING BALL VISCOMETER METHOD

The determination of dynamic viscosity of Newtonian liquids using a suitable falling ball viscometer is performed at 20 ± 0.1 °C, unless otherwise prescribed in the monograph. The time required for a test ball to fall in the liquid to be examined from one ring mark to the other is determined. If no stricter limit is defined for the equipment used the result is valid only if 2 consecutive measures do not differ by more than 1.5 per cent.

Apparatus. The falling ball viscometer consists of: a glass tube enclosed in a mantle, which allow precise control of temperature; six balls made of glass, nickel-iron or steel with different densities and diameters. The tube is fixed in such a way that the axis is inclined by 10 ± 1° with regard to the vertical. The tube has 2 ring marks which define the distance the ball has to roll. Commercially available apparatus is supplied with tables giving the constants, the density of the balls and the suitability of the different balls for the expected range of viscosity.

Method. Fill the clean, dry tube of the viscometer, previously brought to 20 ± 0.1 °C, with the liquid to be examined, avoiding bubbles. Add the ball suitable for the range of viscosity of the liquid so as to obtain a falling time not less than 30 s. Close the tube and maintain the solution at 20 ± 0.1 °C for at least 15 min. Let the ball run through the liquid between the 2 ring marks once without measurement. Let it run again and measure with a stop-watch, to the nearest one-fifth of a second, the time required for the ball to roll from the upper to the lower ring mark. Repeat the test run at least 3 times.

Calculate the dynamic viscosity η in millipascal seconds using the formula:

$$\eta = k\,(\rho_1 - \rho_2) \times t$$

k = constant, expressed in millimeter squared per second squared,

ρ_1 = density of the ball used, expressed in grams per cubic centimetre,

ρ_2 = density of the liquid to be examined, expressed in grams per cubic centimetre, obtained by multiplying its relative density d_{20}^{20} by 0.9982,

t = falling time of the ball, in seconds.

01/2010:20254

2.2.54. ISOELECTRIC FOCUSING[(6)]

GENERAL PRINCIPLES

Isoelectric focusing (IEF) is a method of electrophoresis that separates proteins according to their isoelectric point. Separation is carried out in a slab of polyacrylamide or agarose gel that contains a mixture of amphoteric electrolytes (ampholytes). When subjected to an electric field, the

(6) This chapter has undergone pharmacopoeial harmonisation. See chapter *5.8. Pharmacopoeial harmonisation.*

ampholytes migrate in the gel to create a pH gradient. In some cases gels containing an immobilised pH gradient, prepared by incorporating weak acids and bases to specific regions of the gel network during the preparation of the gel, are used. When the applied proteins reach the gel fraction that has a pH that is the same as their isoelectric point (pI), their charge is neutralised and migration ceases. Gradients can be made over various ranges of pH, according to the mixture of ampholytes chosen.

THEORETICAL ASPECTS

When a protein is at the position of its isoelectric point, it has no net charge and cannot be moved in a gel matrix by the electric field. It may, however, move from that position by diffusion. The pH gradient forces a protein to remain in its isoelectric point position, thus concentrating it; this concentrating effect is called "focusing". Increasing the applied voltage or reducing the sample load result in improved separation of bands. The applied voltage is limited by the heat generated, which must be dissipated. The use of thin gels and an efficient cooling plate controlled by a thermostatic circulator prevents the burning of the gel whilst allowing sharp focusing. The separation is estimated by determining the minimum pI difference (ΔpI), which is necessary to separate 2 neighbouring bands:

$$\Delta \mathrm{pI} = 3 \times \sqrt{\frac{D\,(\mathrm{dpH}/\mathrm{d}x)}{E\,(-\mathrm{d}\mu/\mathrm{dpH})}}$$

D = diffusion coefficient of the protein,

$\frac{\mathrm{dpH}}{\mathrm{d}x}$ = pH gradient,

E = intensity of the electric field, in volts per centimetre,

$-\frac{\mathrm{d}\mu}{\mathrm{dpH}}$ = variation of the solute mobility with the pH in the region close to the pI.

Since D and $-\frac{\mathrm{d}\mu}{\mathrm{dpH}}$ for a given protein cannot be altered, the separation can be improved by using a narrower pH range and by increasing the intensity of the electric field.

Resolution between protein bands on an IEF gel prepared with carrier ampholytes can be quite good. Improvements in resolution may be achieved by using immobilised pH gradients where the buffering species, which are analogous to carrier ampholytes, are copolymerised within the gel matrix. Proteins exhibiting pIs differing by as little as 0.02 pH units may be resolved using a gel prepared with carrier ampholytes while immobilised pH gradients can resolve proteins differing by approximately 0.001 pH units.

PRACTICAL ASPECTS

Special attention must be paid to sample characteristics and/or preparation. Having salt in the sample can be problematic and it is best to prepare the sample, if possible, in deionised water or 2 per cent ampholytes, using dialysis or gel filtration if necessary.

The time required for completion of focusing in thin-layer polyacrylamide gels is determined by placing a coloured protein (e.g. haemoglobin) at different positions on the gel surface and by applying the electric field: the steady state is reached when all applications give an identical band pattern. In some protocols the completion of the focusing is indicated by the time elapsed after the sample application.

The IEF gel can be used as an identity test when the migration pattern on the gel is compared to a suitable standard preparation and IEF calibration proteins, the IEF gel can be used as a limit test when the density of a band on IEF is compared subjectively with the density of bands appearing in a standard preparation, or it can be used as a quantitative test when the density is measured using a densitometer or similar instrumentation to determine the relative concentration of protein in the bands subject to validation.

APPARATUS

An apparatus for IEF consists of:

- a controllable generator for constant potential, current and power; potentials of 2500 V have been used and are considered optimal under a given set of operating conditions; a supply of up to 30 W of constant power is recommended;
- a rigid plastic IEF chamber that contains a cooled plate, of suitable material, to support the gel;
- a plastic cover with platinum electrodes that are connected to the gel by means of paper wicks of suitable width, length and thickness, impregnated with solutions of anodic and cathodic electrolytes.

ISOELECTRIC FOCUSING IN POLYACRYLAMIDE GELS: DETAILED PROCEDURE

The following method is a detailed description of an IEF procedure in thick polyacrylamide slab gels, which is used unless otherwise stated in the monograph.

PREPARATION OF THE GELS

Mould. The mould (see Figure 2.2.54.-1) is composed of a glass plate (A) on which a polyester film (B) is placed to facilitate handling of the gel, one or more spacers (C), a second glass plate (D) and clamps to hold the structure together.

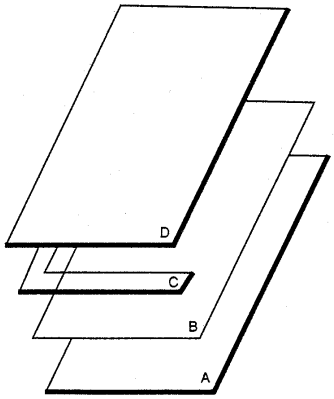

Figure 2.2.54.-1 – *Mould*

7.5 per cent polyacrylamide gel. Dissolve 29.1 g of *acrylamide R* and 0.9 g of *methylenebisacrylamide R* in 100 mL of *water R*. To 2.5 volumes of this solution, add the mixture of ampholytes specified in the monograph and dilute to 10 volumes with *water R*. Mix carefully and degas the solution.

Preparation of the mould. Place the polyester film on the lower glass plate, apply the spacer, place the second glass plate and fit the clamps. Before use, place the solution on a magnetic stirrer and add 0.25 volumes of a 100 g/L solution of *ammonium persulfate R* and 0.25 volumes of *tetramethylethylenediamine R*. Immediately fill the space between the glass plates of the mould with the solution.

METHOD

Dismantle the mould and, making use of the polyester film, transfer the gel onto the cooled support, wetted with a few millilitres of a suitable liquid, taking care to avoid forming air bubbles. Prepare the test solutions and reference solutions as specified in the monograph. Place strips of paper for sample application, about 10 mm × 5 mm in size, on the gel and impregnate each with the prescribed amount of the test and reference solutions. Also apply the prescribed quantity of a solution of proteins with known isoelectric points as pH markers to calibrate the gel. In some protocols the gel has pre-cast slots where a solution of the sample is applied instead of using impregnated paper strips. Cut 2 strips of paper to the

length of the gel and impregnate them with the electrolyte solutions: acid for the anode and alkaline for the cathode. The compositions of the anode and cathode solutions are given in the monograph. Apply these paper wicks to each side of the gel several millimetres from the edge. Fit the cover so that the electrodes are in contact with the wicks (respecting the anodic and cathodic poles). Proceed with the isoelectric focusing by applying the electrical parameters described in the monograph. Switch off the current when the migration of the mixture of standard proteins has stabilised. Using forceps, remove the sample application strips and the 2 electrode wicks. Immerse the gel in *fixing solution for isoelectric focusing in polyacrylamide gel R*. Incubate with gentle shaking at room temperature for 30 min. Drain off the solution and add 200 mL of *destaining solution R*. Incubate with shaking for 1 h. Drain the gel, add *coomassie staining solution R*. Incubate for 30 min. Destain the gel by passive diffusion with *destaining solution R* until the bands are well visualised against a clear background. Locate the position and intensity of the bands in the electropherogram as prescribed in the monograph.

VARIATIONS TO THE DETAILED PROCEDURE (SUBJECT TO VALIDATION)

Where reference to the general method on isoelectric focusing is made, variations in methodology or procedure may be made subject to validation. These include:

- the use of commercially available pre-cast gels and of commercial staining and destaining kits,
- the use of immobilised pH gradients,
- the use of rod gels,
- the use of gel cassettes of different dimensions, including ultra-thin (0.2 mm) gels,
- variations in the sample application procedure, including different sample volumes or the use of sample application masks or wicks other than paper,
- the use of alternate running conditions, including variations in the electric field depending on gel dimensions and equipment, and the use of fixed migration times rather than subjective interpretation of band stability,
- the inclusion of a pre-focusing step,
- the use of automated instrumentation,
- the use of agarose gels.

VALIDATION OF ISO-ELECTRIC FOCUSING PROCEDURES

Where alternative methods to the detailed procedure are employed they must be validated. The following criteria may be used to validate the separation:

- formation of a stable pH gradient of desired characteristics, assessed for example using coloured pH markers of known isoelectric points,
- comparison with the electropherogram provided with the chemical reference substance for the preparation to be examined,
- any other validation criteria as prescribed in the monograph.

SPECIFIED VARIATIONS TO THE GENERAL METHOD

Variations to the general method required for the analysis of specific substances may be specified in detail in monographs. These include:

- the addition of urea in the gel (3 M concentration is often satisfactory to keep protein in solution but up to 8 M can be used): some proteins precipitate at their isoelectric point; in this case, urea is included in the gel formulation to keep the protein in solution; if urea is used, only fresh solutions should be used to prevent carbamylation of the protein;
- the use of alternative staining methods;
- the use of gel additives such as non-ionic detergents (e.g. octylglucoside) or zwitterionic detergents (e.g., CHAPS or CHAPSO), and the addition of ampholyte to the sample, to prevent proteins from aggregating or precipitating.

POINTS TO CONSIDER

Samples can be applied to any area on the gel, but to protect the proteins from extreme pH environments samples should not be applied close to either electrode. During method development the analyst can try applying the protein in 3 positions on the gel (i.e. middle and both ends); the pattern of a protein applied at opposite ends of the gel may not be identical.

A phenomenon known as cathodic drift, where the pH gradient decays over time, may occur if a gel is focused too long. Although not well understood, electroendoosmosis and absorption of carbon dioxide may be factors that lead to cathodic drift. Cathodic drift is observed as focused protein migrating off the cathode end of the gel. Immobilised pH gradients may be used to address this problem.

Efficient cooling (approximately 4 °C) of the bed that the gel lies on during focusing is important. High field strengths used during isoelectric focusing can lead to overheating and affect the quality of the focused gel.

01/2010:20255

2.2.55. PEPTIDE MAPPING[7]

Peptide mapping is an identity test for proteins, especially those obtained by rDNA technology. It involves the chemical or enzymatic treatment of a protein resulting in the formation of peptide fragments followed by separation and identification of these fragments in a reproducible manner. It is a powerful test that is capable of identifying almost any single amino acid changes resulting from events such as errors in the reading of complementary DNA (cDNA) sequences or point mutations. Peptide mapping is a comparative procedure because the information obtained, compared to a reference substance similarly treated, confirms the primary structure of the protein, is capable of detecting whether alterations in structure have occurred, and demonstrates process consistency and genetic stability. Each protein presents unique characteristics which must be well understood so that the scientific and analytical approaches permit validated development of a peptide map that provides sufficient specificity.

This chapter provides detailed assistance in the application of peptide mapping and its validation to characterise the desired protein, to evaluate the stability of the expression construct of cells used for recombinant DNA products and to evaluate the consistency of the overall process, to assess product stability as well as to ensure the identity of the protein, or to detect the presence of protein variant.

Peptide mapping is not a general method, but involves developing specific maps for each unique protein. Although the technology is evolving rapidly, there are certain methods that are generally accepted. Variations of these methods will be indicated, when appropriate, in specific monographs.

A peptide map may be viewed as a fingerprint of a protein and is the end product of several chemical processes that provide a comprehensive understanding of the protein being analysed. 4 principal steps are necessary for the development of the procedure: isolation and purification of the protein, if the protein is part of a formulation; selective cleavage of the peptide bonds; chromatographic separation of the peptides; and analysis and identification of the peptides. A test sample is digested and assayed in parallel with a reference substance. Complete cleavage of peptide bonds is more likely to occur when enzymes such as endoproteases (e.g., trypsin) are used, instead of chemical cleavage reagents. A map must contain

(7) This chapter has undergone pharmacopoeial harmonisation. See chapter *5.8. Pharmacopoeial harmonisation*.

enough peptides to be meaningful. On the other hand, if there are too many fragments, the map might lose its specificity because many proteins will then have the same profiles.

ISOLATION AND PURIFICATION

Isolation and purification are necessary for analysis of bulk drugs or dosage forms containing interfering excipients and carrier proteins and, when required, will be specified in the monograph. Quantitative recovery of protein from the dosage form must be validated.

SELECTIVE CLEAVAGE OF PEPTIDE BONDS

The selection of the approach used for the cleavage of peptide bonds will depend on the protein under test. This selection process involves determination of the type of cleavage to be employed, enzymatic or chemical, and the type of cleavage agent within the chosen category. Several cleavage agents and their specificity are shown in Table 2.2.55.-1. This list is not all-inclusive and will be expanded as other cleavage agents are identified.

Pretreatment of sample. Depending on the size or the configuration of the protein, different approaches in the pretreatment of samples can be used. If trypsin is used as a cleavage agent for proteins with a molecular mass greater than 100 000 Da, lysine residues must be protected by citraconylation or maleylation; otherwise, too many peptides will be generated.

Pretreatment of the cleavage agent. Pretreatment of cleavage agents, especially enzymatic agents, might be necessary for purification purposes to ensure reproducibility of the map. For example, trypsin used as a cleavage agent will have to be treated with tosyl-L-phenylalanine chloromethyl ketone to inactivate chymotrypsin. Other methods, such as purification of trypsin by high performance liquid chromatography (HPLC) or immobilisation of enzyme on a gel support, have been successfully used when only a small amount of protein is available.

Pretreatment of the protein. Under certain conditions, it might be necessary to concentrate the sample or to separate the protein from excipients and stabilisers used in formulation of the product, if these interfere with the mapping procedure. Physical procedures used for pretreatment can include ultrafiltration, column chromatography and lyophilization. Other pretreatments, such as the addition of chaotropic agents (e.g. urea) can be used to unfold the protein prior to mapping. To allow the enzyme to have full access to cleavage sites and permit some unfolding of the protein, it is often necessary to reduce and alkylate the disulfide bonds prior to digestion.

Digestion with trypsin can introduce ambiguities in the peptide map due to side reactions occurring during the digestion reaction, such as non-specific cleavage, deamidation, disulfide isomerisation, oxidation of methionine residues, or formation of pyroglutamic groups created from the deamidation of glutamine at the *N*-terminal side of a peptide. Furthermore, peaks may be produced by autohydrolysis of trypsin. Their intensities depend on the ratio of trypsin to protein. To avoid autohydrolysis, solutions of proteases may be prepared at a pH that is not optimal (e.g. at pH 5 for trypsin), which would mean that the enzyme would not become active until diluted with the digest buffer.

Establishment of optimal digestion conditions. Factors that affect the completeness and effectiveness of digestion of proteins are those that could affect any chemical or enzymatic reactions.

pH of the reaction milieu. The pH of the digestion mixture is empirically determined to ensure the optimisation of the performance of the given cleavage agent. For example, when using cyanogen bromide as a cleavage agent, a highly acidic environment (e.g. pH 2, formic acid) is necessary; however, when using trypsin as a cleavage agent, a slightly alkaline environment (pH 8) is optimal. As a general rule, the pH of the reaction milieu must not alter the chemical integrity of the protein during the digestion and must not change during the course of the fragmentation reaction.

Temperature. A temperature between 25 °C and 37 °C is adequate for most digestions. The temperature used is intended to minimise chemical side reactions. The type of protein under test will dictate the temperature of the reaction milieu, because some proteins are more susceptible to denaturation as the temperature of the reaction increases. For example, digestion of recombinant bovine somatropin is conducted at 4 °C, because at higher temperatures it will precipitate during digestion.

Time. If sufficient sample is available, a time course study is considered in order to determine the optimum time to obtain a reproducible map and avoid incomplete digestion. Time of digestion varies from 2 h to 30 h. The reaction is stopped by the addition of an acid which does not interfere in the map or by freezing.

Amount of cleavage agent used. Although excessive amounts of cleavage agent are used to accomplish a reasonably rapid digestion time (i.e. 6-20 hours), the amount of cleavage agent is minimised to avoid its contribution to the chromatographic map pattern. A protein to protease ratio between 20:1 and

Table 2.2.55.-1. – *Examples of cleavage agents*

Type	Agent	Specificity
Enzymatic	Trypsin (EC 3.4.21.4)	*C*-terminal side of Arg and Lys
	Chymotrypsin (EC 3.4.21.1)	*C*-terminal side of hydrophobic residues (e.g. Leu, Met, Ala, aromatics)
	Pepsin (EC 3.4.23.1 and 2)	Non-specific digest
	Lysyl endopeptidase (Lys-C endopeptidase) (EC 3.4.21.50)	*C*-terminal side of Lys
	Glutamyl endopeptidase (from *S. aureus* strain V8) (EC 3.4.21.19)	*C*-terminal side of Glu and Asp
	Peptidyl-Asp metallo-endopeptidase (endoproteinase Asp-N)	*N*-terminal side of Asp
	Clostripain (EC 3.4.22.8)	*C*-terminal side of Arg
Chemical	Cyanogen bromide	*C*-terminal side of Met
	2-Nitro-5-thio-cyanobenzoic acid	*N*-terminal side of Cys
	O-Iodosobenzoic acid	*C*-terminal side of Trp and Tyr
	Dilute acid	Asp and Pro
	BNPS-skatole	Trp

200:1 is generally used. It is recommended that the cleavage agent is added in 2 or more stages to optimise cleavage. Nonetheless, the final reaction volume remains small enough to facilitate the next step in peptide mapping, the separation step. To sort out digestion artifacts that might interfere with the subsequent analysis, a blank determination is performed, using a digestion control with all the reagents, except the test protein.

CHROMATOGRAPHIC SEPARATION

Many techniques are used to separate peptides for mapping. The selection of a technique depends on the protein being mapped. Techniques that have been successfully used for separation of peptides are shown in Table 2.2.55-2. In this section, a most widely used reversed-phase HPLC method is described as one of the procedures of chromatographic separation.

The purity of solvents and mobile phases is a critical factor in HPLC separation. HPLC-grade solvents and water that are commercially available, are recommended for reversed-phase HPLC. Dissolved gases present a problem in gradient systems where the solubility of the gas in a solvent may be less in a mixture than in a single solvent. Vacuum degassing and agitation by sonication are often used as useful degassing procedures. When solid particles in the solvents are drawn into the HPLC system, they can damage the sealing of pump valves or clog the top of the chromatographic column. Both pre- and post-pump filtration is also recommended.

Table 2.2.55-2. – *Techniques used for the separation of peptides*

Reversed-phase high performance liquid chromatography (HPLC)
Ion-exchange chromatography (IEC)
Hydrophobic interaction chromatography (HIC)
Polyacrylamide gel electrophoresis (PAGE), non-denaturating
Sodium dodecyl sulfate polyacrylamide gel electrophoresis (SDS-PAGE)
Capillary electrophoresis (CE)
Paper chromatography-high voltage (PCHV)
High voltage-paper electrophoresis (HVPE)

Chromatographic column. The selection of a chromatographic column is empirically determined for each protein. Columns with 10 nm or 30 nm pore size with silica support can give optimal separation. For smaller peptides, *octylsilyl silica gel for chromatography R* (3-10 µm) and *octadecylsilyl silica gel for chromatography R* (3-10 µm) column packings are more efficient than *butylsilyl silica gel for chromatography R* (5-10 µm).

Solvent. The most commonly used solvent is water with acetonitrile as the organic modifier to which not more than 0.1 per cent trifluoroacetic acid is added. If necessary, add propyl alcohol or isopropyl alcohol to solubilise the digest components, provided that the addition does not unduly increase the viscosity of the components.

Mobile phase. Buffered mobile phases containing phosphate are used to provide some flexibility in the selection of pH conditions, since shifts of pH in the 3.0-5.0 range enhance the separation of peptides containing acidic residues (e.g. glutamic and aspartic acids). Sodium or potassium phosphates, ammonium acetate, phosphoric acid at a pH between 2 and 7 (or higher for polymer-based supports) have also been used with acetonitrile gradients. Acetonitrile containing trifluoroacetic acid is used quite often.

Gradient. Gradients can be linear, nonlinear, or include step functions. A shallow gradient is recommended in order to separate complex mixtures. Gradients are optimised to provide clear resolution of 1 or 2 peaks that will become "marker" peaks for the test.

Isocratic elution. Isocratic HPLC systems using a single mobile phase are used on the basis of their convenience of use and improved detector responses. Optimal composition of a mobile phase to obtain clear resolution of each peak is sometimes difficult to establish. Mobile phases for which slight changes in component ratios or in pH significantly affect retention times of peaks in peptide maps must not be used in isocratic HPLC systems.

Other parameters. Temperature control of the column is usually necessary to achieve good reproducibility. The flow rates for the mobile phases range from 0.1-2.0 mL/min, and the detection of peptides is performed with a UV detector at 200-230 nm. Other methods of detection have been used (e.g. post-column derivatisation), but they are not as robust or versatile as UV detection.

Validation. This section provides an experimental means for measuring the overall performance of the test method. The acceptance criteria for system suitability depend on the identification of critical test parameters that affect data interpretation and acceptance. These critical parameters are also criteria that monitor peptide digestion and peptide analysis. An indicator that the desired digestion endpoint has been achieved is shown by comparison with a reference standard, which is treated in the same manner as the test protein. The use of a reference substance in parallel with the test protein is critical in the development and establishment of system suitability limits. In addition, a chromatogram is included with the reference substance for additional comparison purposes. Other indicators may include visual inspection of protein or peptide solubility, the absence of intact protein, or measurement of responses of a digestion-dependent peptide. The critical system suitability parameters for peptide analysis will depend on the particular mode of peptide separation and detection and on the data analysis requirements.

When peptide mapping is used as an identification test, the system suitability requirements for the identified peptides cover selectivity and precision. In this case, as well as when identification of variant protein is done, the identification of the primary structure of the peptide fragments in the peptide map provides both a verification of the known primary structure and the identification of protein variants by comparison with the peptide map of the reference substance for the specified protein. The use of a digested reference substance for a given protein in the determination of peptide resolution is the method of choice. For an analysis of a variant protein, a characterised mixture of a variant and a reference substance can be used, especially if the variant peptide is located in a less-resolved region of the map. The index of pattern consistency can be simply the number of major peptides detected. Peptide pattern consistency can be best defined by the resolution of peptide peaks. Chromatographic parameters, such as peak-to-peak resolution, maximum peak width, peak area, peak tailing factors, and column efficiency, may be used to define peptide resolution. Depending on the protein under test and the method of separation used, single peptide or multiple peptide resolution requirements may be necessary.

The replicate analysis of the digest of the reference substance for the protein under test yields measures of precision and quantitative recovery. Recovery of the identified peptides is generally ascertained by the use of internal or external peptide standards. The precision is expressed as the relative standard deviation (RSD). Differences in the recovery and precision of the identified peptides are to be expected; therefore, the system suitability limits will have to be established for both the recovery and the precision of the identified peptides. These limits are unique for a given protein and will be specified in the individual monograph.

Visual comparison of the relative retentions, the peak responses (the peak area or the peak height), the number of peaks, and the overall elution pattern is completed initially. It is then complemented and supported by mathematical analysis of the peak response ratios and by the chromatographic profile of a 1:1 (*V/V*) mixture of sample and reference substance digest. If all peaks in the sample digest and in the reference substance digest have the same relative retentions and peak response ratios, then the identity of the sample under test is confirmed.

If peaks that initially eluted with significantly different relative retentions are then observed as single peaks in the 1:1 mixture, the initial difference would be an indication of system variability. However, if separate peaks are observed in the 1:1 mixture, this would be evidence of the nonequivalence of the peptides in each peak. If a peak in the 1:1 mixture is significantly broader than the corresponding peak in the sample and reference substance digest, it may indicate the presence of different peptides. The use of computer-aided pattern recognition software for the analysis of peptide mapping data has been proposed and applied, but issues related to the validation of the computer software preclude its use in a compendial test in the near future. Other automated approaches have been used that employ mathematical formulas, models, and pattern recognition. Such approaches are, for example, the automated identification of compounds by IR spectroscopy and the application of diode-array UV spectral analysis for identification of peptides. These methods have limitations due to inadequate resolutions, co-elution of fragments, or absolute peak response differences between reference substance and sample digest fragments.

The numerical comparison of the peak retention times and peak areas or peak heights can be done for a selected group of relevant peaks that have been correctly identified in the peptide maps. Peak areas can be calculated using 1 peak showing relatively small variation as an internal reference, keeping in mind that peak area integration is sensitive to baseline variation and likely to introduce error in the analysis. Alternatively, the percentage of each peptide peak height relative to the sum of all peak heights can be calculated for the sample under test. The percentage is then compared to that of the corresponding peak of the reference substance. The possibility of auto-hydrolysis of trypsin is monitored by producing a blank peptide map, that is, the peptide map obtained when a blank solution is treated with trypsin.

The minimum requirement for the qualification of peptide mapping is an approved test procedure that includes system suitability as a test control. In general, early in the regulatory process, qualification of peptide mapping for a protein is sufficient. As the regulatory approval process for the protein progresses, additional qualifications of the test can include a partial validation of the analytical procedure to provide assurance that the method will perform as intended in the development of a peptide map for the specified protein.

ANALYSIS AND IDENTIFICATION OF PEPTIDES

This section gives guidance on the use of peptide mapping during development in support of regulatory applications.

The use of a peptide map as a qualitative tool does not require the complete characterisation of the individual peptide peaks. However, validation of peptide mapping in support of regulatory applications requires rigorous characterisation of each of the individual peaks in the peptide map. Methods to characterise peaks range from *N*-terminal sequencing of each peak followed by amino acid analysis to the use of mass spectroscopy (MS).

For characterisation purposes, when *N*-terminal sequencing and amino acids analysis are used, the analytical separation is scaled up. Since scale-up might affect the resolution of peptide peaks, it is necessary, using empirical data, to assure that there is no loss of resolution due to scale-up. Eluates corresponding to specific peptide peaks are collected, vacuum-concentrated, and chromatographed again, if necessary. Amino acid analysis of fragments may be limited by the peptide size. If the *N*-terminus is blocked, it may need to be cleared before sequencing. *C*-terminal sequencing of proteins in combination with carboxypeptidase and matrix-assisted laser desorption ionisation coupled to time-of-flight analyser (MALDI-TOF) can also be used for characterisation purposes.

The use of MS for characterisation of peptide fragments is by direct infusion of isolated peptides or by the use of on-line LC-MS for structure analysis. In general, it includes electrospray and MALDI-TOF-MS, as well as fast-atom bombardment (FAB). Tandem MS has also been used to sequence a modified protein and to determine the type of amino acid modification that has occurred. The comparison of mass spectra of the digests before and after reduction provides a method to assign the disulfide bonds to the various sulfydryl-containing peptides.

If regions of the primary structure are not clearly demonstrated by the peptide map, it might be necessary to develop a secondary peptide map. The goal of a validated method of characterisation of a protein through peptide mapping is to reconcile and account for at least 95 per cent of the theoretical composition of the protein structure.

01/2010:20256

2.2.56. AMINO ACID ANALYSIS[(8)]

Amino acid analysis refers to the methodology used to determine the amino acid composition or content of proteins, peptides, and other pharmaceutical preparations. Proteins and peptides are macromolecules consisting of covalently bonded amino acid residues organised as a linear polymer. The sequence of the amino acids in a protein or peptide determines the properties of the molecule. Proteins are considered large molecules that commonly exist as folded structures with a specific conformation, while peptides are smaller and may consist of only a few amino acids. Amino acid analysis can be used to quantify proteins and peptides, to determine the identity of proteins or peptides based on their amino acid composition, to support protein and peptide structure analysis, to evaluate fragmentation strategies for peptide mapping, and to detect atypical amino acids that might be present in a protein or peptide. It is necessary to hydrolyse a protein/peptide to its individual amino acid constituents before amino acid analysis. Following protein/peptide hydrolysis, the amino acid analysis procedure can be the same as that practiced for free amino acids in other pharmaceutical preparations. The amino acid constituents of the test sample are typically derivatised for analysis.

APPARATUS

Methods used for amino acid analysis are usually based on a chromatographic separation of the amino acids present in the test sample. Current techniques take advantage of the automated chromatographic instrumentation designed for analytical methodologies. An amino acid analysis instrument will typically be a low-pressure or high-pressure liquid chromatograph capable of generating mobile phase gradients that separate the amino acid analytes on a chromatographic column. The instrument must have post-column derivatisation capability, unless the sample is analysed using precolumn derivatisation. The detector is usually an ultraviolet/visible or fluorescence detector depending on the derivatisation method used. A recording device (e.g., integrator) is used for transforming the analogue signal from the detector and for quantitation. It is preferred that instrumentation be dedicated particularly for amino acid analysis.

(8) This chapter has undergone pharmacopoeial harmonisation. See chapter *5.8. Pharmacopoeial harmonisation*.

GENERAL PRECAUTIONS

Background contamination is always a concern for the analyst in performing amino acid analysis. High purity reagents are necessary (e.g., low purity hydrochloric acid can contribute to glycine contamination). Analytical reagents are changed routinely every few weeks using only high-pressure liquid chromatography (HPLC) grade solvents. Potential microbial contamination and foreign material that might be present in the solvents are reduced by filtering solvents before use, keeping solvent reservoirs covered, and not placing amino acid analysis instrumentation in direct sunlight.

Laboratory practices can determine the quality of the amino acid analysis. Place the instrumentation in a low traffic area of the laboratory. Keep the laboratory clean. Clean and calibrate pipets according to a maintenance schedule. Keep pipet tips in a covered box; the analysts may not handle pipet tips with their hands. The analysts may wear powder-free latex or equivalent gloves. Limit the number of times a test sample vial is opened and closed because dust can contribute to elevated levels of glycine, serine, and alanine.

A well-maintained instrument is necessary for acceptable amino acid analysis results. If the instrument is used on a routine basis, it is to be checked daily for leaks, detector and lamp stability, and the ability of the column to maintain resolution of the individual amino acids. Clean or replace all instrument filters and other maintenance items on a routine schedule.

REFERENCE MATERIAL

Acceptable amino acid standards are commercially available for amino acid analysis and typically consist of an aqueous mixture of amino acids. When determining amino acid composition, protein or peptide standards are analysed with the test material as a control to demonstrate the integrity of the entire procedure. Highly purified bovine serum albumin has been used as a protein standard for this purpose.

CALIBRATION OF INSTRUMENTATION

Calibration of amino acid analysis instrumentation typically involves analysing the amino acid standard, which consists of a mixture of amino acids at a number of concentrations, to determine the response factor and range of analysis for each amino acid. The concentration of each amino acid in the standard is known. In the calibration procedure, the analyst dilutes the amino acid standard to several different analyte levels within the expected linear range of the amino acid analysis technique. Then, replicates at each of the different analyte levels can be analysed. Peak areas obtained for each amino acid are plotted versus the known concentration for each of the amino acids in the standard dilution. These results will allow the analyst to determine the range of amino acid concentrations where the peak area of a given amino acid is an approximately linear function of the amino acid concentration. It is important that the analyst prepare the samples for amino acid analysis so that they are within the analytical limits (e.g., linear working range) of the technique employed in order to obtain accurate and repeatable results.

4 to 6 amino acid standard levels are analysed to determine a response factor for each amino acid. The response factor is calculated as the average peak area or peak height per nanomole of amino acid present in the standard. A calibration file consisting of the response factor for each amino acid is prepared and used to calculate the concentration of each amino acid present in the test sample. This calculation involves dividing the peak area corresponding to a given amino acid by the response factor for that amino acid to give the nanomoles of the amino acid. For routine analysis, a single-point calibration may be sufficient; however, the calibration file is updated frequently and tested by the analysis of analytical controls to ensure its integrity.

REPEATABILITY

Consistent high quality amino acid analysis results from an analytical laboratory require attention to the repeatability of the assay. During analysis of the chromatographic separation of the amino acids or their derivatives, numerous peaks can be observed on the chromatogram that correspond to the amino acids. The large number of peaks makes it necessary to have an amino acid analysis system that can repeatedly identify the peaks based on retention time and integrate the peak areas for quantitation. A typical repeatability evaluation involves preparing a standard amino acid solution and analysing many replicates (e.g., 6 analyses or more) of the same standard solution. The relative standard deviation (RSD) is determined for the retention time and integrated peak area of each amino acid. An evaluation of the repeatability is expanded to include multiple assays conducted over several days by different analysts. Multiple assays include the preparation of standard dilutions from starting materials to determine the variation due to sample handling. The amino acid composition of a standard protein (e.g., bovine serum albumin) is often analysed as part of the repeatability evaluation. By evaluating the replicate variation (i.e., RSD), the laboratory can establish analytical limits to ensure that the analyses from the laboratory are under control. It is desirable to establish the lowest practical variation limits to ensure the best results. Areas to focus on to lower the variability of the amino acid analysis include sample preparation, high background spectral interference due to quality of reagents and/or laboratory practices, instrument performance and maintenance, data analysis and interpretation, and analyst performance and habits. All parameters involved are fully investigated in the scope of the validation work.

SAMPLE PREPARATION

Accurate results from amino acid analysis require purified protein and peptide samples. Buffer components (e.g., salts, urea, detergents) can interfere with the amino acid analysis and are removed from the sample before analysis. Methods that utilise post-column derivatisation of the amino acids are generally not affected by buffer components to the extent seen with pre-column derivatisation methods. It is desirable to limit the number of sample manipulations to reduce potential background contamination, to improve analyte recovery, and to reduce labour. Common techniques used to remove buffer components from protein samples include the following methods: (1) injecting the protein sample onto a reversed-phase HPLC system, removing the protein with a volatile solvent containing a sufficient organic component, and drying the sample in a vacuum centrifuge; (2) dialysis against a volatile buffer or water; (3) centrifugal ultrafiltration for buffer replacement with a volatile buffer or water; (4) precipitating the protein from the buffer using an organic solvent (e.g., acetone); (5) gel filtration.

INTERNAL STANDARDS

It is recommended that an internal standard be used to monitor physical and chemical losses and variations during amino acid analysis. An accurately known amount of internal standard can be added to a protein solution prior to hydrolysis. The recovery of the internal standard gives the general recovery of the amino acids of the protein solution. Free amino acids, however, do not behave in the same way as protein-bound amino acids during hydrolysis, whose rates of release or destruction are variable. Therefore, the use of an internal standard to correct for losses during hydrolysis may give unreliable results. It will be necessary to take this point into consideration when interpreting the results. Internal standards can also be added to the mixture of amino acids after hydrolysis to correct for differences in sample application and changes in reagent stability and flow rates. Ideally, an internal standard is an unnaturally occurring primary amino acid that is commercially available and inexpensive. It should also be stable during hydrolysis, its response factor should

be linear with concentration, and it needs to elute with a unique retention time without overlapping other amino acids. Commonly used amino acid standards include norleucine, nitrotyrosine, and α-aminobutyric acid.

PROTEIN HYDROLYSIS

Hydrolysis of protein and peptide samples is necessary for amino acid analysis of these molecules. The glassware used for hydrolysis must be very clean to avoid erroneous results. Glove powders and fingerprints on hydrolysis tubes may cause contamination. To clean glass hydrolysis tubes, boil tubes for 1 h in 1 M hydrochloric acid or soak tubes in concentrated nitric acid or in a mixture of equal volumes of concentrated hydrochloric acid and nitric acid. Clean hydrolysis tubes are rinsed with high-purity water followed by a rinse with HPLC grade methanol, dried overnight in an oven, and stored covered until use. Alternatively, pyrolysis of clean glassware at 500 °C for 4 h may also be used to eliminate contamination from hydrolysis tubes. Adequate disposable laboratory material can also be used.

Acid hydrolysis is the most common method for hydrolysing a protein sample before amino acid analysis. The acid hydrolysis technique can contribute to the variation of the analysis due to complete or partial destruction of several amino acids: tryptophan is destroyed; serine and threonine are partially destroyed; methionine might undergo oxidation; and cysteine is typically recovered as cystine (but cystine recovery is usually poor because of partial destruction or reduction to cysteine). Application of adequate vacuum (less than 200 µm of mercury or 26.7 Pa) or introduction of an inert gas (argon) in the headspace of the reaction vessel can reduce the level of oxidative destruction. In peptide bonds involving isoleucine and valine the amido bonds of Ile-Ile, Val-Val, Ile-Val, and Val-Ile are partially cleaved; and asparagine and glutamine are deamidated, resulting in aspartic acid and glutamic acid, respectively. The loss of tryptophan, asparagine, and glutamine during an acid hydrolysis limits quantitation to 17 amino acids. Some of the hydrolysis techniques described are used to address these concerns. Some of the hydrolysis techniques described (i.e., Methods 4-11) may cause modifications to other amino acids. Therefore, the benefits of using a given hydrolysis technique are weighed against the concerns with the technique and are tested adequately before employing a method other than acid hydrolysis.

A time-course study (i.e., amino acid analysis at acid hydrolysis times of 24 h, 48 h and 72 h) is often employed to analyse the starting concentration of amino acids that are partially destroyed or slow to cleave. By plotting the observed concentration of labile amino acids (e.g., serine and threonine) versus hydrolysis time, the line can be extrapolated to the origin to determine the starting concentration of these amino acids. Time-course hydrolysis studies are also used with amino acids that are slow to cleave (e.g., isoleucine and valine). During the hydrolysis time course, the analyst will observe a plateau in these residues. The level of this plateau is taken as the residue concentration. If the hydrolysis time is too long, the residue concentration of the sample will begin to decrease, indicating destruction by the hydrolysis conditions.

An acceptable alternative to the time-course study is to subject an amino acid calibration standard to the same hydrolysis conditions as the test sample. The amino acid in free form may not completely represent the rate of destruction of labile amino acids within a peptide or protein during the hydrolysis. This is especially true for peptide bonds that are slow to cleave (e.g., Ile-Val bonds). However, this technique will allow the analyst to account for some residue destruction. Microwave acid hydrolysis has been used and is rapid but requires special equipment as well as special precautions. The optimal conditions for microwave hydrolysis must be investigated for each individual protein/peptide sample. The microwave hydrolysis technique typically requires only a few minutes, but even a deviation of one minute may give inadequate results (e.g., incomplete hydrolysis or destruction of labile amino acids). Complete proteolysis, using a mixture of proteases, has been used but can be complicated, requires the proper controls, and is typically more applicable to peptides than proteins.

During initial analyses of an unknown protein, experiments with various hydrolysis time and temperature conditions are conducted to determine the optimal conditions.

METHOD 1

Acid hydrolysis using hydrochloric acid containing phenol is the most common procedure used for protein/peptide hydrolysis preceding amino acid analysis. The addition of phenol to the reaction prevents the halogenation of tyrosine.

Hydrolysis solution. 6 M hydrochloric acid containing 0.1 per cent to 1.0 per cent of phenol.

Procedure

Liquid phase hydrolysis. Place the protein or peptide sample in a hydrolysis tube, and dry (the sample is dried so that water in the sample will not dilute the acid used for the hydrolysis). Add 200 µL of hydrolysis solution per 500 µg of lyophilised protein. Freeze the sample tube in a dry ice-acetone bath, and flame seal *in vacuo*. Samples are typically hydrolysed at 110 °C for 24 h *in vacuo* or in an inert atmosphere to prevent oxidation. Longer hydrolysis times (e.g., 48 h and 72 h) are investigated if there is a concern that the protein is not completely hydrolysed.

Vapour phase hydrolysis. This is one of the most common acid hydrolysis procedures, and it is preferred for microanalysis when only small amounts of the sample are available. Contamination of the sample from the acid reagent is also minimised by using vapour phase hydrolysis. Place vials containing the dried samples in a vessel that contains an appropriate amount of hydrolysis solution. The hydrolysis solution does not come in contact with the test sample. Apply an inert atmosphere or vacuum (less than 200 µm of mercury or 26.7 Pa) to the headspace of the vessel, and heat to about 110 °C for a 24 h hydrolysis time. Acid vapour hydrolyses the dried sample. Any condensation of the acid in the sample vials is to be minimised. After hydrolysis, dry the test sample *in vacuo* to remove any residual acid.

METHOD 2

Tryptophan oxidation during hydrolysis is decreased by using mercaptoethanesulfonic acid as the reducing acid.

Hydrolysis solution. 2.5 M mercaptoethanesulfonic acid solution.

Vapour phase hydrolysis. Dry about 1 µg to 100 µg of the protein/peptide under test in a hydrolysis tube. Place the hydrolysis tube in a larger tube with about 200 µL of the hydrolysis solution. Seal the larger tube *in vacuo* (about 50 µm of mercury or 6.7 Pa) to vaporise the hydrolysis solution. Heat the hydrolysis tube to 170-185 °C for about 12.5 min. After hydrolysis, dry the hydrolysis tube *in vacuo* for 15 min to remove the residual acid.

METHOD 3

Tryptophan oxidation during hydrolysis is prevented by using thioglycollic acid (TGA) as the reducing acid.

Hydrolysis solution. 7 M hydrochloric acid containing 1 per cent of phenol, 10 per cent of trifluoroacetic acid and 20 per cent of thioglycollic acid.

Vapour phase hydrolysis. Dry about 10 µg to 50 µg of the protein/peptide under test in a sample tube. Place the sample tube in a larger tube with about 200 µL of the hydrolysis solution. Seal the larger tube *in vacuo* (about 50 µm of mercury or 6.7 Pa) to vaporise the TGA. Heat the sample tube to 166 °C for about 15-30 min. After hydrolysis, dry the sample tube *in vacuo* for 5 min to remove the residual acid. Recovery of tryptophan by this method may be dependent on the amount of sample present.

METHOD 4

Cysteine/cystine and methionine oxidation is performed with performic acid before the protein hydrolysis.

Oxidation solution. Use performic acid freshly prepared by mixing 1 volume of hydrogen peroxide solution (30 per cent) and 9 volumes of anhydrous formic acid and incubating at room temperature for 1 h.

Procedure. Dissolve the protein/peptide sample in 20 µL of anhydrous formic acid and heat at 50 °C for 5 min; then add 100 µL of the oxidation solution. Allow the oxidation to proceed for 10-30 min. In this reaction, cysteine is converted to cysteic acid and methionine is converted to methionine-sulfone. Remove the excess reagent from the sample in a vacuum centrifuge. The oxidised protein can then be acid hydrolysed using Method 1 or Method 2. This technique may cause modifications to tyrosine residues in the presence of halides.

METHOD 5

Cysteine/cystine oxidation is accomplished during the liquid phase hydrolysis with sodium azide.

Hydrolysis solution. To 6 M hydrochloric acid containing 0.2 per cent of phenol, add sodium azide to obtain a final concentration of 2 g/L. The added phenol prevents halogenation of tyrosine.

Liquid phase hydrolysis. Conduct the protein/peptide hydrolysis at about 110 °C for 24 h. During the hydrolysis, the cysteine/cystine present in the sample is converted to cysteic acid by the sodium azide present in the hydrolysis solution. This technique allows better tyrosine recovery than Method 4, but it is not quantitative for methionine. Methionine is converted to a mixture of the parent methionine and its 2 oxidative products, methionine-sulfoxide and methionine-sulfone.

METHOD 6

Cysteine/cystine oxidation is accomplished with dimethyl sulfoxide (DMSO).

Hydrolysis solution. To 6 M hydrochloric acid containing 0.1 per cent to 1.0 per cent of phenol, add dimethyl sulfoxide to obtain a final concentration of 2 per cent *V/V*.

Vapour phase hydrolysis. Conduct the protein/peptide hydrolysis at about 110 °C for 24 h. During the hydrolysis, the cysteine/cystine present in the sample is converted to cysteic acid by the DMSO present in the hydrolysis solution. As an approach to limit variability and compensate for partial destruction, it is recommended to evaluate the cysteic acid recovery from oxidative hydrolysis of standard proteins containing 1-8 mol of cysteine. The response factors from protein/peptide hydrolysates are typically about 30 per cent lower than those for non-hydrolysed cysteic acid standards. Because histidine, methionine, tyrosine, and tryptophan are also modified, a complete compositional analysis is not obtained with this technique.

METHOD 7

Cysteine/cystine reduction and alkylation is accomplished by a vapour phase pyridylethylation reaction.

Reducing solution. Transfer 83.3 µL of pyridine, 16.7 µL of 4-vinylpyridine, 16.7 µL of tributylphosphine, and 83.3 µL of water to a suitable container and mix.

Procedure. Add the protein/peptide (between 1 and 100 µg) to a hydrolysis tube, and place in a larger tube. Transfer the reducing solution to the large tube, seal *in vacuo* (about 50 µm of mercury or 6.7 Pa), and heat at about 100 °C for 5 min. Then remove the inner hydrolysis tube, and dry it in a vacuum desiccator for 15 min to remove residual reagents. The pyridylethylated sample can then be acid hydrolysed using previously described procedures. The pyridylethylation reaction is performed simultaneously with a protein standard sample containing 1-8 mol of cysteine to evaluate the pyridylethyl-cysteine recovery. Longer incubation times for the pyridylethylation reaction can cause modifications to the α-amino terminal group and the ε-amino group of lysine in the protein.

METHOD 8

Cysteine/cystine reduction and alkylation is accomplished by a liquid phase pyridylethylation reaction.

Stock solutions. Prepare and filter 3 solutions: 1 M Tris-hydrochloride pH 8.5 containing 4 mM disodium edetate (stock solution A), 8 M guanidine hydrochloride (stock solution B), and 10 per cent of 2-mercaptoethanol (stock solution C).

Reducing solution. Prepare a mixture of 1 volume of stock solution A and 3 volumes of stock solution B to obtain a buffered solution of 6 M guanidine hydrochloride in 0.25 M tris-hydrochloride.

Procedure. Dissolve about 10 µg of the test sample in 50 µL of the reducing solution, and add about 2.5 µL of stock solution C. Store under nitrogen or argon for 2 h at room temperature in the dark. To achieve the pyridylethylation reaction, add about 2 µL of 4-vinylpyridine to the protein solution, and incubate for an additional 2 h at room temperature in the dark. Desalt the protein/peptide by collecting the protein/peptide fraction from a reversed-phase HPLC separation. The collected sample can be dried in a vacuum centrifuge before acid hydrolysis.

METHOD 9

Cysteine/cystine reduction and alkylation is accomplished by a liquid phase carboxymethylation reaction.

Stock solutions. Prepare as directed for Method 8.

Carboxymethylation solution. Prepare a 100 g/L solution of iodoacetamide in alcohol.

Buffer solution. Use the reducing solution, prepared as described for Method 8.

Procedure. Dissolve the test sample in 50 µL of the buffer solution, and add about 2.5 µL of stock solution C. Store under nitrogen or argon for 2 h at room temperature in the dark. Add the carboxymethylation solution in a ratio 1.5 fold per total theoretical content of thiols, and incubate for an additional 30 min at room temperature in the dark. If the thiol content of the protein is unknown, then add 5 µL of 100 mM iodoacetamide for every 20 nmol of protein present. The reaction is stopped by adding excess of 2-mercaptoethanol. Desalt the protein/peptide by collecting the protein/peptide fraction from a reversed-phase HPLC separation. The collected sample can be dried in a vacuum centrifuge before acid hydrolysis. The *S*-carboxyamidomethyl-cysteine formed will be converted to *S*-carboxymethyl-cysteine during acid hydrolysis.

METHOD 10

Cysteine/cystine is reacted with dithiodiglycolic acid or dithiodipropionic acid to produce a mixed disulfide. The choice of dithiodiglycolic acid or dithiodipropionic acid depends on the required resolution of the amino acid analysis method.

Reducing solution. A 10 g/L solution of dithiodiglycolic acid (or dithiodipropionic acid) in 0.2 M sodium hydroxide.

Procedure. Transfer about 20 µg of the test sample to a hydrolysis tube, and add 5 µL of the reducing solution. Add 10 µL of isopropyl alcohol, and then remove all of the sample liquid by vacuum centrifugation. The sample is then hydrolysed using Method 1. This method has the advantage that other amino acid residues are not derivatised by side reactions, and that the sample does not need to be desalted prior to hydrolysis.

METHOD 11

Asparagine and glutamine are converted to aspartic acid and glutamic acid, respectively, during acid hydrolysis. Asparagine and aspartic acid residues are added and represented by *Asx*, while glutamine and glutamic acid residues are added and

represented by *Glx*. Proteins/peptides can be reacted with bis(1,1-trifluoroacetoxy)iodobenzene (BTI) to convert the asparagine and glutamine residues to diaminopropionic acid and diaminobutyric acid residues, respectively, upon acid hydrolysis. These conversions allow the analyst to determine the asparagine and glutamine content of a protein/peptide in the presence of aspartic acid and glutamic acid residues.

Reducing solutions. Prepare and filter 3 solutions: a solution of 10 mM trifluoroacetic acid (Solution A), a solution of 5 M guanidine hydrochloride and 10 mM trifluoroacetic acid (Solution B), and a freshly prepared solution of dimethylformamide containing 36 mg of BTI per millilitre (Solution C).

Procedure. In a clean hydrolysis tube, transfer about 200 µg of the test sample, and add 2 mL of Solution A or Solution B and 2 mL of Solution C. Seal the hydrolysis tube *in vacuo*. Heat the sample at 60 °C for 4 h in the dark. The sample is then dialysed with water to remove the excess reagents. Extract the dialysed sample 3 times with equal volumes of butyl acetate, and then lyophilise. The protein can then be acid hydrolysed using previously described procedures. The α,β-diaminopropionic and α,γ-diaminobutyric acid residues do not typically resolve from the lysine residues upon ion-exchange chromatography based on amino acid analysis. Therefore, when using ion-exchange as the mode of amino acid separation, the asparagine and glutamine contents are the quantitative difference in the aspartic acid and glutamic acid content assayed with underivatised and BTI-derivatised acid hydrolysis. The threonine, methionine, cysteine, tyrosine, and histidine assayed content can be altered by BTI derivatisation; a hydrolysis without BTI will have to be performed if the analyst is interested in the composition of these other amino acid residues of the protein/peptide.

METHODOLOGIES OF AMINO ACID ANALYSIS: GENERAL PRINCIPLES

Many amino acid analysis techniques exist, and the choice of any one technique often depends on the sensitivity required from the assay. In general, about one-half of the amino acid analysis techniques employed rely on the separation of the free amino acids by ion-exchange chromatography followed by post-column derivatisation (e.g., with ninhydrin or *o*-phthalaldehyde). Post-column derivatisation techniques can be used with samples that contain small amounts of buffer components, (such as salts and urea) and generally require between 5 µg and 10 µg of protein sample per analysis. The remaining amino acid techniques typically involve pre-column derivatisation of the free amino acids (e.g., phenyl isothiocyanate; 6-aminoquinolyl-*N*-hydroxysuccinimidyl carbamate or *o*-phthalaldehyde; (dimethylamino)azobenzenesulfonyl chloride; 9-fluorenylmethyl chloroformate; and 7-fluoro-4-nitrobenzo-2-oxa-1,3-diazole) followed by reversed-phase HPLC. Pre-column derivatisation techniques are very sensitive and usually require between 0.5 µg and 1.0 µg of protein sample per analysis but may be influenced by buffer salts in the samples. Pre-column derivatisation techniques may also result in multiple derivatives of a given amino acid, which complicates the result interpretation. Post-column derivatisation techniques are generally influenced less by performance variation of the assay than pre-column derivatisation techniques.

The following methods may be used for quantitative amino acid analysis. Instruments and reagents for these procedures are available commercially. Furthermore, many modifications of these methodologies exist with different reagent preparations, reaction procedures, chromatographic systems, etc. Specific parameters may vary according to the exact equipment and procedure used. Many laboratories will use more than one amino acid analysis technique to exploit the advantages offered by each. In each of these methods, the analogue signal is visualised by means of a data acquisition system, and the peak areas are integrated for quantification purposes.

METHOD 1 - POST-COLUMN NINHYDRIN DERIVATISATION

Ion-exchange chromatography with post-column ninhydrin derivatisation is one of the most common methods employed for quantitative amino acid analysis. As a rule, a lithium-based cation-exchange system is employed for the analysis of the more complex physiological samples, and the faster sodium-based cation-exchange system is used for the more simplistic amino acid mixtures obtained with protein hydrolysates (typically containing 17 amino acid components). Separation of the amino acids on an ion-exchange column is accomplished through a combination of changes in pH and cation strength. A temperature gradient is often employed to enhance separation.

When the amino acid reacts with ninhydrin, the reactant has a characteristic purple or yellow colour. Amino acids, except imino acid, give a purple colour, and show an absorption maximum at 570 nm. The imino acids such as proline give a yellow colour, and show an absorption maximum at 440 nm. The post-column reaction between ninhydrin and amino acids eluted from the column is monitored at 440 nm and 570 nm, and the chromatogram obtained is used for the determination of amino acid composition.

The detection limit is considered to be 10 pmol for most of the amino acid derivatives, but 50 pmol for the proline derivative. Response linearity is obtained in the range of 20-500 pmol with correlation coefficients exceeding 0.999. To obtain good composition data, samples larger than 1 µg before hydrolysis are best suited for this amino acid analysis of protein/peptide.

METHOD 2 - POST-COLUMN OPA DERIVATISATION

o-Phthalaldehyde (OPA) reacts with primary amines in the presence of thiol compound, to form highly fluorescent isoindole products. This reaction is used for the post-column derivatisation in analysis of amino acids by ion-exchange chromatography. The rule of the separation is the same as Method 1.

Although OPA does not react with secondary amines (imino acids such as proline) to form fluorescent substances, the oxidation with sodium hypochlorite or chloramine T allows secondary amines to react with OPA. The procedure employs a strongly acidic cation-exchange column for separation of free amino acids followed by post-column oxidation with sodium hypochlorite or chloramine T and post-column derivatisation using OPA and a thiol compound such as *N*-acetyl-L-cysteine or 2-mercaptoethanol. The derivatisation of primary amino acids is not noticeably affected by the continuous supply of sodium hypochlorite or chloramine T.

Separation of the amino acids on an ion-exchange column is accomplished through a combination of changes in pH and cation strength. After post-column derivatisation of eluted amino acids with OPA, the reactant passes through the fluorometric detector. Fluorescence intensity of OPA-derivatised amino acids are monitored with an excitation wavelength of 348 nm and an emission wavelength of 450 nm.

The detection limit is considered to be a few tens of picomole level for most of the OPA-derivatised amino acids. Response linearity is obtained in the range of a few picomole level to a few tens of nanomole level. To obtain good compositional data, samples larger than 500 ng of protein/peptide before hydrolysis are recommended.

METHOD 3 - PRE-COLUMN PITC DERIVATISATION

Phenylisothiocyanate (PITC) reacts with amino acids to form phenylthiocarbamyl (PTC) derivatives which can be detected with high sensitivity at 254 nm. Therefore, pre-column derivatisation of amino acids with PITC followed by a reversed-phase HPLC separation with UV detection is used to analyse the amino acid composition.

After the reagent is removed under vacuum, the derivatised amino acids can be stored dry and frozen for several weeks with no significant degradation. If the solution for injection is kept cold, no noticeable loss in chromatographic response occurs after 3 days.

Separation of the PTC-amino acids on a reversed-phase HPLC with an octadecylsilyl (ODS) column is accomplished through a combination of changes in concentrations of acetonitrile and buffer ionic strength. PTC-amino acids eluted from the column are monitored at 254 nm.

The detection limit is considered to be 1 pmol for most of the PTC-amino acids. Response linearity is obtained in the range of 20-500 pmol with correlation coefficients exceeding 0.999. To obtain good compositional data, samples larger than 500 ng of protein/peptide before hydrolysis are recommended.

METHOD 4 - PRE-COLUMN AQC DERIVITISATION

Pre-column derivatisation of amino acids with 6-aminoquinolyl-*N*-hydroxysuccinimidyl carbamate (AQC) followed by reversed-phase HPLC separation with fluorometric detection is used.

AQC reacts with amino acids to form stable, fluorescent unsymmetric urea derivatives (AQC-amino acids) which are readily amenable to analysis by reversed-phase HPLC. Therefore, pre-column derivatisation of amino acids with AQC followed by reversed-phase HPLC separation with fluorimetric detection is used to analyse the amino acid composition.

Separation of the AQC-amino acids on a reversed-phase HPLC with an ODS column is accomplished through a combination of changes in concentrations of acetonitrile and buffer ionic strengh. Selective fluorescence detection of the derivatives with an excitation wavelength at 250 nm and an emission wavelength at 395 nm allows for the direct injection of the reaction mixture with no significant interference from the only major fluorescent reagent by-product, 6-aminoquinoline. Excess reagent is rapidly hydrolysed ($t_{1/2}$<15 s) to yield 6-aminoquinoline, *N*-hydroxysuccinimide and carbon dioxide, and after 1 min no further derivatisation can take place.

Peak areas for AQC-amino acids are essentially unchanged for at least 1 week at room temperature. Therefore AQC-amino acids have more than sufficient stability to allow for overnight automated chromatographic analysis.

The detection limit is considered to range from about 40 fmol to 320 fmol for each amino acid, except for cystein. The detection limit for cystein is approximately 800 fmol. Response linearity is obtained in the range of 2.5-200 µM with correlation coefficients exceeding 0.999. Good compositional data can be obtained from the analysis of derivatised protein hydrolysates derived from as little as 30 ng of protein/peptide.

METHOD 5 - PRE-COLUMN OPA DERIVATISATION

Pre-column derivatisation of amino acids with *o*-phthalaldehyde (OPA) followed by reversed-phase HPLC separation with fluorometric detection is used. This technique does not detect amino acids that exist as secondary amines (e.g., proline).

OPA in conjunction with a thiol reagent reacts with primary amine groups to form highly fluorescent isoindole products. 2-Mercaptoethanol or 3-mercaptopropionic acid can be used as the thiol. OPA itself does not fluoresce and consequently produces no interfering peaks. In addition, its solubility and stability in aqueous solution, along with the rapid kinetics for the reaction, make it amenable to automated derivatisation and analysis using an autosampler to mix the sample with the reagent. However, lack of reactivity with secondary amino acids has been a predominant drawback. This method does not detect amino acids that exist as secondary amines (e.g., proline). To compensate for this drawback, this technique may be combined with another technique described in Method 7 or Method 8.

Pre-column derivatisation of amino acids with OPA is followed by a reversed-phase HPLC separation. Because of the instability of the OPA-amino acid derivative, HPLC separation and analysis are performed immediately following derivatisation. The liquid chromatograph is equipped with a fluorometric detector for the detection of derivatised amino acids. Fluorescence intensity of OPA-derivatised amino acids is monitored with an excitation wavelength of 348 nm and an emission wavelength of 450 nm.

Detection limits as low as 50 fmol via fluorescence have been reported, although the practical limit of analysis remains at 1 pmol.

METHOD 6 - PRE-COLUMN DABS-Cl DERIVATISATION

Pre-column derivatisation of amino acids with (dimethylamino)azobenzenesulfonyl chloride (DABS-Cl) followed by reversed-phase HPLC separation with visible light detection is used.

DABS-Cl is a chromophoric reagent employed for the labelling of amino acids. Amino acids labelled with DABS-Cl (DABS-amino acids) are highly stable and show an absorption maximum at 436 nm.

DABS-amino acids, all naturally occurring amino acid derivatives, can be separated on an ODS column of a reversed-phase HPLC by employing gradient systems consisting of acetonitrile and aqueous buffer mixture. Separated DABS-amino acids eluted from the column are detected at 436 nm in the visible region.

This method can analyse the imino acids such as proline together with the amino acids at the same degree of sensitivity, DABS-Cl derivatisation method permits the simultaneous quantification of tryptophan residues by previous hydrolysis of the protein/peptide with sulfonic acids such as mercaptoethanesulfonic acid, *p*-toluenesulfonic acid or methanesulfonic acid described in Method 2 under Protein hydrolysis. The other acid-labile residues, asparagine and glutamine, can also be analysed by previous conversion into diaminopropionic acid and diaminobutyric acid, respectively, by treatment of protein/peptide with BTI described in Method 11 under Protein hydrolysis.

The non-proteinogenic amino acid norleucine cannot be used as an internal standard in this method as this compound is eluted in a chromatographic region crowded with peaks of primary amino acids. Nitrotyrosine can be used as an internal standard because it is eluted in a clean region.

The detection limit of DABS-amino acid is about 1 pmol. As little as 2-5 pmol of an individual DABS-amino acid can be quantitatively analysed with reliability, and only 10-30 ng of the dabsylated protein hydrolysate is required for each analysis.

METHOD 7 - PRE-COLUMN FMOC-Cl DERIVATISATION

Pre-column derivatisation of amino acids with 9-fluorenylmethyl chloroformate (FMOC-Cl) followed by reversed-phase HPLC separation with fluorometric detection is used.

FMOC-Cl reacts with both primary and secondary amino acids to form highly fluorescent products. The reaction proceeds under mild conditions in aqueous solution and is completed in 30 s. The derivatives are stable, only the histidine derivative showing any breakdown. Although FMOC-Cl is fluorescent itself, the reagent excess and fluorescent side-products can be eliminated without loss of FMOC-amino acids.

FMOC-amino acids are separated by a reversed-phase HPLC using an ODS column. The separation is carried out by gradient elution varied linearly from a mixture of 10 volumes of acetonitrile, 40 volumes of methanol and 50 volumes of acetic acid buffer to a mixture of 50 volumes of acetonitrile and 50 volumes of acetic acid buffer and 20 amino acid derivatives are separated in 20 min. Each derivative eluted

from the column is monitored by a fluorometric detector set at an excitation wavelength of 260 nm and an emission wavelength of 313 nm.

The detection limit is in the low femtomole range. A linearity range of 0.1-50 µM is obtained for most of the amino acids.

METHOD 8 - PRE-COLUMN NBD-F DERIVATISATION

Pre-column derivatisation of amino acids with 7-fluoro-4-nitrobenzo-2-oxa-1,3-diazole (NBD-F) followed by reversed-phase HPLC separation with fluorometric detection is used.

NBD-F reacts with both primary and secondary amino acids to form highly fluorescent products. Amino acids are derivatised with NBD-F by heating to 60 °C for 5 min.

NBD-amino acid derivatives are separated on an ODS column of a reversed-phase HPLC by employing a gradient elution system consisting of acetonitrile and aqueous buffer mixture, and 17 amino acid derivatives are separated in 35 min. ε-Aminocaproic acid can be used as an internal standard, because it is eluted in a clean chromatographic region. Each derivative eluted from the column is monitored by a fluorometric detector set at an excitation wavelength of 480 nm and an emission wavelength of 530 nm.

The sensitivity of this method is almost the same as for the pre-column OPA derivatisation method (Method 5), excluding proline to which OPA is not reactive, and might be advantageous for NBD-F against OPA. The detection limit for each amino acid is about 10 fmol. Profile analysis can be achieved with about 1.5 mg of protein hydrolysates in the pre-column reaction mixture.

DATA CALCULATION AND ANALYSIS

When determining the amino acid content of a protein/peptide hydrolysate, it should be noted that the acid hydrolysis step destroys tryptophan and cysteine. Serine and threonine are partially destroyed by acid hydrolysis, while isoleucine and valine residues may be only partially cleaved. Methionine can undergo oxidation during acid hydrolysis, and some amino acids (e.g., glycine and serine) are common contaminants. Application of adequate vacuum (less than 200 µm of mercury or 26.7 Pa) or introduction of inert gas (argon) in the headspace of the reaction vessel during vapour phase hydrolysis can reduce the level of oxidative destruction. Therefore, the quantitative results obtained for cysteine, tryptophan, threonine, isoleucine, valine, methionine, glycine, and serine from a protein/peptide hydrolysate may be variable and may warrant further investigation and consideration.

Amino Acid Mole Percent. This is the number of specific amino acid residues per 100 residues in a protein. This result may be useful for evaluating amino acid analysis data when the molecular mass of the protein under investigation is unknown. This information can be used to corroborate the identity of a protein/peptide and has other applications. Carefully identify and integrate the peaks obtained as directed for each procedure. Calculate the mole percent for each amino acid present in the test sample using the formula:

$$\frac{100r_U}{r}$$

in which r_U is the peak response, in nanomoles, of the amino acid under test; and r is the sum of peak responses, in nanomoles, for all amino acids present in the test sample. Comparison of the mole percent of the amino acids under test to data from known proteins can help establish or corroborate the identity of the sample protein.

Unknown Protein Samples. This data analysis technique can be used to estimate the protein concentration of an unknown protein sample using the amino acid analysis data. Calculate the mass, in micrograms, of each recovered amino acid using the formula:

$$\frac{mM_r}{1000}$$

in which m is the recovered quantity, in nanomoles, of the amino acid under test; and M_r is the average molecular mass for that amino acid, corrected for the mass of the water molecule that was eliminated during peptide bond formation. The sum of the masses of the recovered amino acids will give an estimate of the total mass of the protein analysed after appropriate correction for partially and completely destroyed amino acids. If the molecular mass of the unknown protein is available (i.e., by SDS-PAGE analysis or mass spectroscopy), the amino acid composition of the unknown protein can be predicted. Calculate the number of residues of each amino acid using the formula:

$$\frac{m}{\left(\frac{1000M}{M_{rt}}\right)}$$

in which m is the recovered quantity, in nanomoles, of the amino acid under test; M is the total mass, in micrograms, of the protein; and M_{rt} is the molecular mass of the unknown protein.

Known protein samples. This data analysis technique can be used to investigate the amino acid composition and protein concentration of a protein sample of known molecular mass and amino acid composition using the amino acid analysis data. When the composition of the protein being analysed is known, one can exploit the fact that some amino acids are recovered well, while other amino acid recoveries may be compromised because of complete or partial destruction (e.g., tryptophan, cysteine, threonine, serine, methionine), incomplete bond cleavage (i.e., for isoleucine and valine) and free amino acid contamination (i.e., by glycine and serine).

Because those amino acids that are recovered best represent the protein, these amino acids are chosen to quantify the amount of protein. Well-recovered amino acids are, typically, aspartate-asparagine, glutamate-glutamine, alanine, leucine, phenylalanine, lysine, and arginine. This list can be modified based on experience with one's own analysis system. Divide the quantity, in nanomoles, of each of the well-recovered amino acids by the expected number of residues for that amino acid to obtain the protein content based on each well-recovered amino acid. Average the protein content results calculated. The protein content determined for each of the well-recovered amino acids should be evenly distributed about the mean. Discard protein content values for those amino acids that have an unacceptable deviation from the mean. Typically greater than 5 per cent variation from the mean is considered unacceptable. Recalculate the mean protein content from the remaining values to obtain the protein content of the sample. Divide the content of each amino acid by the calculated mean protein content to determine the amino acid composition of the sample by analysis.

Calculate the relative compositional error, in percentage, using the formula:

$$\frac{100m}{m_S}$$

in which m is the experimentally determined quantity, in nanomoles per amino acid residue, of the amino acid under test; and m_S is the known residue value for that amino acid. The average relative compositional error is the average of the absolute values of the relative compositional errors of the individual amino acids, typically excluding tryptophan and cysteine from this calculation. The average relative compositional error can provide important information on the stability of analysis run over time. The agreement in the amino acid composition between the protein sample and the known composition can be used to corroborate the identity and purity of the protein in the sample.

01/2008:20257

2.2.57. INDUCTIVELY COUPLED PLASMA-ATOMIC EMISSION SPECTROMETRY

GENERAL PRINCIPLE

Inductively coupled plasma-atomic emission spectrometry (ICP-AES) is an atomic emission spectrometry method that uses an inductively coupled plasma (ICP) as the excitation source.

An ICP is a highly ionised inert gas (usually argon) with equal numbers of electrons and ions sustained by a radio-frequency (RF) field. The high temperature reached in the plasma successively desolvates, vaporises, excites - atomic emission spectrometry (AES) detection - and ionises - mass spectrometry (MS) detection - atoms from the sample. Detection limits are, generally, in the lower nanogram (ICP-MS) to microgram (ICP-AES) per litre range.

The plasma is formed by a tangential stream of support gas through a 'torch', i.e. a system consisting of 3 concentric quartz tubes. A metal coil (the load coil) surrounds the top end of the torch and is connected to a radio-frequency (RF) generator. Power (usually 700-1500 W) is applied through the coil and an oscillating magnetic field corresponding to the frequency of the generator (in most cases 27 MHz, 40 MHz) is formed. The plasma forms when the support gas is made conductive by exposing it to an electric discharge, which produces seed electrons and ions. Inside the induced magnetic field, the charged particles (electrons and ions) are forced to flow in a closed annular path. As they meet resistance to their flow, heating takes place producing additional ionisation. The process occurs almost instantaneously, and the plasma expands to its full strength and dimensions. The radio-frequency oscillation of the power applied through the coil causes radio-frequency electric and magnetic fields to be set up in the area at the top of the torch. When a spark (produced by a Tesla tube or some other seeding device) is applied to the support gas flowing through the torch, some electrons are stripped from the support gas atoms. These electrons are then caught up in the magnetic field and accelerated. Adding energy to the electrons by the use of a coil is known as inductive coupling. These high-energy electrons in turn collide with other support-gas atoms, stripping off still more electrons. The collisional ionisation of the support gas continues in a chain reaction, breaking down the gas into a physical plasma consisting of support-gas atoms, electrons and support-gas ions. The plasma is then sustained within the torch and load coil as radio-frequency energy is continually transferred to it through the inductive coupling process.

The ICP appears as an intense, very bright, plume-shaped plasma. At the base the plasma is toroidal, and this is referred to as the induction region (IR), i.e. the region in which the inductive energy transfer from the load coil to the plasma takes place. The sample is introduced through the induction region into the centre of the plasma.

APPARATUS

The apparatus consists essentially of the following elements:

- sample-introduction system consisting of a peristaltic pump delivering the solution at constant flow rate into a nebuliser;
- radio-frequency (RF) generator;
- plasma torch;
- transfer optics focussing the image of the plasma at the entrance slit of the spectrometer; radial viewing is better for difficult matrices (alkalis, organics), whereas axial viewing gives more intensity and better detection limits in simple matrices;
- wavelength dispersive devices consisting of diffraction gratings, prisms, filters or interferometers;
- detectors converting radiant energy into electrical energy;
- data-acquisition unit.

INTERFERENCE

Interference is anything that causes the signal from an analyte in a sample to be different from the signal for the same concentration of that analyte in a calibration solution. The well-known chemical interference that is encountered in flame atomic absorption spectrometry is usually weak in ICP-AES. In rare cases where interference occurs, it may be necessary to increase the RF power or to reduce the inner support-gas flow to eliminate it. The interference in ICP-AES can be of spectral origin or even the result of high concentrations of certain elements or matrix compounds. Physical interference (due to differences in viscosity and surface tension of the sample and calibration standards) can be minimised by dilution of the sample, matrix matching, use of internal standards or through application of the method of standard additions.

Another type of interference occasionally encountered in ICP-AES is the so-called 'easily ionised elements (EIEs) effect'. The EIEs are those elements that are ionised much more easily, for example alkaline metals and alkaline earths. In samples that contain high concentrations of EIEs (more than 0.1 per cent), suppression or enhancement of emission signals is likely to occur.

Spectral interference. This may be due to other lines or shifts in background intensity. These lines may correspond to argon (observed above 300 nm), OH bands due to the decomposition of water (at about 300 nm), NO bands due to the interaction of the plasma with the ambient air (between 200 nm and 300 nm), and other elements in the sample, especially those present at high concentrations. The interference falls into 4 different categories: simple background shift, sloping background shift, direct spectral overlap, and complex background shift.

Absorption interference. This arises when part of the emission from an analyte is absorbed before it reaches the detector. This effect is observed particularly when the concentration of a strongly emitting element is so high that the atoms or ions of that element that are in the lower energy state of transition absorb significant amounts of the radiation emitted by the relevant excited species. This effect, known as self-absorption, determines the upper end of the linear working range for a given emission line.

Multicomponent spectral fitting. Multiple emission-line determinations are commonly used to overcome problems with spectral interferences. A better, more accurate method for performing spectral interference corrections is to use the information obtained with advanced detector systems through multicomponent spectral fitting. This quantifies not only the interference, but also the background contribution from the matrix, thereby creating a correction formula. Multicomponent spectral fitting utilises a multiple linear-squares model based on the analysis of pure analyte, the matrix and the blank, creating an interference-corrected mathematical model. This permits the determination of the analyte emission in a complex matrix with improved detection limits and accuracy.

PROCEDURE

SAMPLE PREPARATION AND SAMPLE INTRODUCTION

The basic goal for the sample preparation is to ensure that the analyte concentration falls within the working range of the instrument through dilution or preconcentration, and that the sample-containing solution can be nebulised in a reproducible manner.

Several sample-introduction systems tolerate high acid concentrations, but the use of sulfuric and phosphoric acids can contribute to background emission observed in the ICP spectra. Therefore, nitric and hydrochloric acids

are preferable. The availability of hydrofluoric acid-resistant (for example perfluoroalkoxy polymer) sample-introduction systems and torches also allows the use of hydrofluoric acid. In selecting a sample-introduction method, the requirements for sensitivity, stability, speed, sample size, corrosion resistance and resistance to clogging have to be considered. The use of a cross-flow nebuliser combined with a spray chamber and torch is suitable for most requirements. The peristaltic pumps used for ICP-AES usually deliver the standard and sample solutions at a rate of 1 mL/min or less.

In the case of organic solvents being used, the introduction of oxygen must be considered to avoid organic layers.

CHOICE OF OPERATING CONDITIONS

The standard operating conditions prescribed by the manufacturer are to be followed. Usually, different sets of operating conditions are used for aqueous solutions and for organic solvents. Suitable operating parameters are to be properly chosen:

- wavelength selection;
- support-gas flow rates (outer, intermediate and inner tubes of the torch);
- RF power;
- viewing position (radial or axial);
- pump speed;
- conditions for the detector (gain/voltage for photomultiplier tube detectors, others for array detectors);
- integration time (time set to measure the emission intensity at each wavelength).

CONTROL OF INSTRUMENT PERFORMANCE

System suitability

The following tests may be carried out with a multi-element control solution to ensure the adequate performance of the ICP-AES system:

- energy transfer (generator, torch, plasma); measurement of the ratio Mg II (280.270 nm)/Mg I (285.213 nm) may be used;
- sample transfer, by checking nebuliser efficiency and stability;
- resolution (optical system), by measuring peak widths at half height, for example As (189.042 nm), Mn (257.610 nm), Cu (324.754 nm) or Ba (455.403 nm);
- analytical performance, by calculating detection limits of selected elements over the wavelength range.

VALIDATION OF THE METHOD

Satisfactory performance of methods prescribed in monographs is verified at suitable time intervals.

LINEARITY

Prepare and analyse not fewer than 4 reference solutions over the calibration range plus a blank. Perform not fewer than 5 replicates.

The calibration curve is calculated by least-square regression from all measured data of the calibration test. The regression curve, the means, the measured data and the confidence interval of the calibration curve are plotted. The operating method is valid when:

- the correlation coefficient is at least 0.99;
- the residuals of each calibration level are randomly distributed around the calibration curve.

Calculate the mean and relative standard deviation for the lowest and for the highest calibration level.

When the ratio of the estimated standard deviations of the lowest and the highest calibration level is less than 0.5 or greater than 2.0, a more precise estimation of the calibration curve may be obtained using weighted linear regression. Both linear and quadratic weighting functions are applied to the data to find the most appropriate weighting function to be employed.

If the means compared to the calibration curve show a deviation from linearity, two-dimensional linear regression is used.

ACCURACY

Verify the accuracy preferably by using a certified reference material (CRM). Where this is not possible, perform a test for recovery.

Recovery. For assay determinations a recovery of 90 per cent to 110 per cent is to be obtained. The test is not valid if recovery, for example for trace-element determination, is outside of the range 80 per cent to 120 per cent of the theoretical value. Recovery may be determined on a suitable reference solution (matrix solution) spiked with a known quantity of analyte (concentration range that is relevant to the samples to be determined).

REPEATABILITY

The repeatability is not greater than 3 per cent for an assay and not greater than 5 per cent for an impurity test.

LIMIT OF QUANTIFICATION

Verify that the limit of quantification (for example, determined using the 10 σ approach) is below the value to be measured.

01/2008:20258

2.2.58. INDUCTIVELY COUPLED PLASMA-MASS SPECTROMETRY

Inductively coupled plasma-mass spectrometry (ICP-MS) is a mass spectrometry method that uses an inductively coupled plasma (ICP) as the ionisation source. The basic principles of ICP formation are described in chapter *2.2.57* on inductively coupled plasma-atomic emission spectrometry (ICP-AES).

ICP-MS utilises the ability of the ICP to generate charged ions from the element species within a sample. These ions are then directed into a mass spectrometer, which separates them according to their mass-to-charge ratio (*m*/*z*). Most mass spectrometers have a quadrupole system or a magnetic sector. Ions are transported from the plasma through 2 cones (sampler and skimmer cones, forming the interface region) to the ion optics. The ion optics consist of an electrostatic lens, which takes ions from an area at atmospheric pressure to the mass filter at a vacuum of 10^{-8} Pa or less, maintained with a turbomolecular pump. After their filtration, ions of the selected mass/charge ratio are directed to a detector (channel electromultiplier, Faraday cup, dynodes), where ion currents are converted into electrical signals. The element is quantified according to the number of ions arriving and generating electrical pulses per unit time.

The sample-introduction system and data-handling techniques of an ICP-AES system are also used in ICP-MS.

APPARATUS

The apparatus consists essentially of the following elements:

- sample-introduction system, consisting of a peristaltic pump delivering the solution at constant flow rate into a nebuliser;
- radio-frequency (RF) generator;
- plasma torch;
- interface region including cones to transport ions to the ion optics;
- mass spectrometer;
- detector;
- data-acquisition unit.

INTERFERENCE

Mass interference is the major problem, for example by isobaric species that significantly overlap the mass signal of the ions of interest, especially in the central part of the mass range (for example 40-80 a.m.u.). The combination of atomic ions leads to polyatomic or molecular interferences (i.e. $^{40}Ar^{16}O$ with ^{56}Fe or $^{40}Ar^{40}Ar$ with ^{80}Se). Matrix interference may also occur with some analytes. Some samples have an impact on droplet formation or on the ionisation temperature in the plasma. These phenomena may lead to the suppression of analyte signals. Physical interference is to be circumvented by using the method of internal standardisation or by standard addition. The element used as internal standard depends on the element to be measured: ^{59}Co and ^{115}In, for example, can be used as internal standards.

The prime characteristic of an ICP-MS instrument is its resolution, i.e. the efficiency of separation of 2 close masses. Quadrupole instruments are, from this point of view, inferior to magnetic-sector spectrometers.

PROCEDURE

SAMPLE PREPARATIONS AND SAMPLE INTRODUCTION

The sample preparation usually involves a step of digestion of the matrix by a suitable method, for example in a microwave oven. Furthermore, it is important to ensure that the analyte concentration falls within the working range of the instrument through dilution or preconcentration, and that the sample-containing solution can be nebulised in a reproducible manner.

Several sample-introduction systems tolerate high acid concentrations, but the use of sulfuric and phosphoric acids can contribute to background emission. Therefore, nitric and hydrochloric acids are preferable. The availability of hydrofluoric acid-resistant (for example perfluoroalkoxy polymer) sample-introduction systems and torches also allows the use of hydrofluoric acid. In selecting a sample-introduction method, the requirements for sensitivity, stability, speed, sample size, corrosion resistance and resistance to clogging have to be considered. The use of a cross-flow nebuliser combined with a spray chamber and torch is suitable for most requirements. The peristaltic pumps usually deliver the standard and sample solutions at a rate of 20-1000 µL/min.

In the case of organic solvents being used, the introduction of oxygen must be considered to avoid organic layers.

CHOICE OF OPERATING CONDITIONS

The standard operating conditions prescribed by the manufacturer are to be followed. Usually, different sets of operating conditions are used for aqueous solutions and for organic solvents. Suitable operating parameters are to be properly chosen:

- selection of cones (material of sampler and skimmer);
- support-gas flow rates (outer, intermediate and inner tubes of the torch);
- RF power;
- pump speed;
- selection of one or more isotopes of the element to be measured (mass).

ISOTOPE SELECTION

Isotope selection is made using several criteria. The most abundant isotope for a given element is selected to obtain maximum sensitivity. Furthermore, an isotope with the least interference from other species in the sample matrix and from the support gas should be selected. Information about isobaric interferences and interferences from polyatomic ions of various types, for example hydrides, oxides, chlorides, etc., is usually available in the software of ICP-MS instrument manufacturers.

CONTROL OF INSTRUMENT PERFORMANCE

System suitability

- Tuning of the instrument allows to monitor and adjust the measurement before running samples. ICP-MS mass accuracy is checked with a tuning solution containing several isotopes covering the whole range of masses, for example ^{9}Be, ^{59}Co, ^{89}Y, ^{115}In, ^{140}Ce and ^{209}Bi.
- Sensitivity and short- and long-term stability are recorded. The instrument parameters (plasma condition, ion lenses and quadrupole parameter) are to be optimised to obtain the highest possible number of counts.
- Tuning for resolution and mass axis is to be done with a solution of Li, Y and Tl to ensure an acceptable response over a wide range of masses.
- Evaluation of the efficiency of the plasma to decompose oxides has to be performed in order to minimise these interferences. The ratio Ce/CeO and/or Ba/BaO is a good indicator, and a level less than about 3 per cent is required.
- Reduction of the formation of double-charged ions is made with Ba and Ce. The ratio of the signal for double-charged ions to the assigned element should be less than 2 per cent.
- Long-term stability is checked by running a standard first and at the end of the sample sequence, controlling whether salt deposits on the cones have reduced the signal throughout the run.

VALIDATION OF THE METHOD

Satisfactory performance of methods prescribed in monographs is verified at suitable time intervals.

LINEARITY

Prepare and analyse not fewer than 4 reference solutions over the calibration range plus a blank. Perform not fewer than 5 replicates.

The calibration curve is calculated by least-square regression from all measured data of the calibration test. The regression curve, the means, the measured data and the confidence interval of the calibration curve are plotted. The operating method is valid when:

- the correlation coefficient is at least 0.99;
- the residuals of each calibration level are randomly distributed around the calibration curve.

Calculate the mean and relative standard deviation for the lowest and for the highest calibration level.

When the ratio of the estimated standard deviations of the lowest and the highest calibration level is less than 0.5 or greater than 2.0, a more precise estimation of the calibration curve may be obtained using weighted linear regression. Both linear and quadratic weighting functions are applied to the data to find the most appropriate weighting function to be employed.

If the means compared to the calibration curve show a deviation from linearity, two-dimensional linear regression is used.

ACCURACY

Verify the accuracy preferably by using a certified reference material (CRM). Where this is not possible, perform a test for recovery.

Recovery. For assay determinations a recovery of 90 per cent to 110 per cent is to be obtained. The test is not valid if recovery, for example for trace-element determination, is outside the range 80 per cent to 120 per cent of the theoretical value. Recovery may be determined on a suitable reference solution (matrix solution) spiked with a known quantity of analyte (concentration range that is relevant to the samples to be determined).

REPEATABILITY

The repeatability is not greater than 3 per cent for an assay and not greater than 5 per cent for an impurity test.

LIMIT OF QUANTIFICATION

Verify that the limit of quantification (for example, determined using the 10 σ approach) is below the value to be measured.

01/2011:20259

2.2.59. GLYCAN ANALYSIS OF GLYCOPROTEINS

1. INTRODUCTION

Glycan analysis is a test to analyse glycan moieties of glycoproteins. It may involve:

- whole glycoprotein analysis;
- separation and detection of protein glycoforms;
- analysis of glycopeptides obtained after enzymatic treatment of the glycoprotein;
- analysis of released glycans obtained after chemical or enzymatic treatment of the glycoprotein.

Monosaccharide analysis may complement information obtained by glycan analysis.

Glycosylation can play a predominant role in determining the function, pharmacokinetics, pharmacodynamics, stability, and immunogenicity of biotherapeutics. Glycosylation, unlike transcription, is a non-template-driven enzymatic modification process that results in glycan heterogeneity. The manufacturing procedure also has an influence on glycan heterogeneity. Glycoprotein glycan analysis may therefore be an important test to identify variations in the glycosylation pattern of the glycoprotein and/or monitor the consistency of the glycosylation pattern during production.

Glycan analysis can be a comparative procedure, because the information obtained, compared to a similarly treated reference substance, confirms product consistency.

This chapter provides approaches used for glycoprotein glycan analysis and requirements for the application of methods and validation of methods.

Glycan analysis is not a single general method, but involves the application of specific procedures and the development of specific glycan maps for each unique glycoprotein. Specific procedures are therefore indicated in relevant specific monographs.

1-1. *PROTEIN GLYCOSYLATION*

There are 3 main types of enzymatic glycosylation found in proteins:

- *N*-glycosylation, which involves the addition of oligosaccharides to the nitrogen on the terminal amide group of asparagine;
- *O*-glycosylation, which involves the addition of oligosaccharides to the hydroxyl groups of serine, threonine, and/or hydroxyproline;
- *C*-glycosylation, which involves the addition of an α-mannopyranose to the C2-carbon of the indole ring of tryptophan.

Non-enzymatic additions, also known as glycation, can occur when proteins are incubated with reducing sugars.

This chapter describes analytical methods for the *N*- and *O*-linked glycosylations, which are the most commonly found in glycoprotein medicinal products.

1-2. *HETEROGENEITY OF THE PROTEIN GLYCOSYLATION*

Different levels of glycan heterogeneity can appear during the production of glycoproteins. This heterogeneity may result from variations:

- in the degree of occupancy (full, partial, unoccupied);
- in the type of glycosylation (*N*- or *O*-linked);
- in the oligosaccharide structures (extensions, branching and linkage).

This heterogeneity in glycosylation results in a set of glycoforms for one specific glycoprotein. These variations arise because, unlike transcription and translation, glycosylation is a non-template post-translational modification process. The glycosylation pattern at a given site depends on many factors including the cell-specific and/or growth-dependent availability of glycosyltransferases and exo-glycosidases found in the Golgi apparatus and endoplasmic reticulum. Protein glycosylation is also influenced by the protein structure, the production process, the host-vector expression system and the cell culture conditions.

2. GLYCAN ANALYSIS PROCEDURES

Heterogeneity in glycosylation can be assessed by 4 distinct and complementary approaches:

- analysis of the intact glycoprotein;
- analysis of glycopeptides;
- analysis of released glycans;
- monosaccharide analysis.

The present section provides methods and general requirements used for glycan analysis of glycoproteins containing *N*- and *O*-linked glycans.

Glycan analysis is usually a multistep process. There are numerous methodologies for glycan analysis. This variety is a consequence of the diversity and complexity of glycan structures, of the available technologies and detection systems, and of the wide range of approaches depending on the level of information required.

Figure 2.2.59.-1 provides an overview of glycan analysis analytical procedures that can be employed to apply the chosen approach(es). Many variations of the same techniques and conditions are available depending on the glycan structures and origin.

Isolation and purification. Isolation and purification may be necessary for analysis of bulk drug substances or dosage forms containing interfering excipients, and, when required, will be described in the specific monograph.

2-1. *ANALYSIS OF INTACT GLYCOPROTEIN*

Analysis of the intact glycoprotein provides information on the overall pattern of glycosylation of the glycoprotein.

This approach provides limited information when the molecule is large and contains multiple glycosylation sites.

Methods such as capillary electrophoresis (CE) (*2.2.47*) and mass spectrometry (MS) (*2.2.43*) can be used. Size-based techniques, such as size-exclusion chromatography (*2.2.30*) and sodium dodecyl sulfate polyacrylamide gel electrophoresis (SDS-PAGE) (*2.2.31*), may provide information on the glycosylation status of a protein. If the degree of sialylation significantly contributes to the biological activity of the glycoprotein, ion-exchange chromatography (*2.2.46*), isoelectric focusing (IEF) (*2.2.54*) or CE (*2.2.47*) may be performed to monitor sialylation. The technique must be chosen according to its suitability to provide a reliable correlation between the degree of sialylation and the bioactivity of the product.

2-2. *ANALYSIS OF GLYCOPEPTIDES*

Analysis of glycopeptides provides information on site-specific glycosylation properties, on the degree of occupancy, and on the oligosaccharide structures. It involves proteolytic digestion of the glycoprotein. Approaches to site-specific cleavage of the protein backbone are given in general chapter *2.2.55. Peptide mapping*.

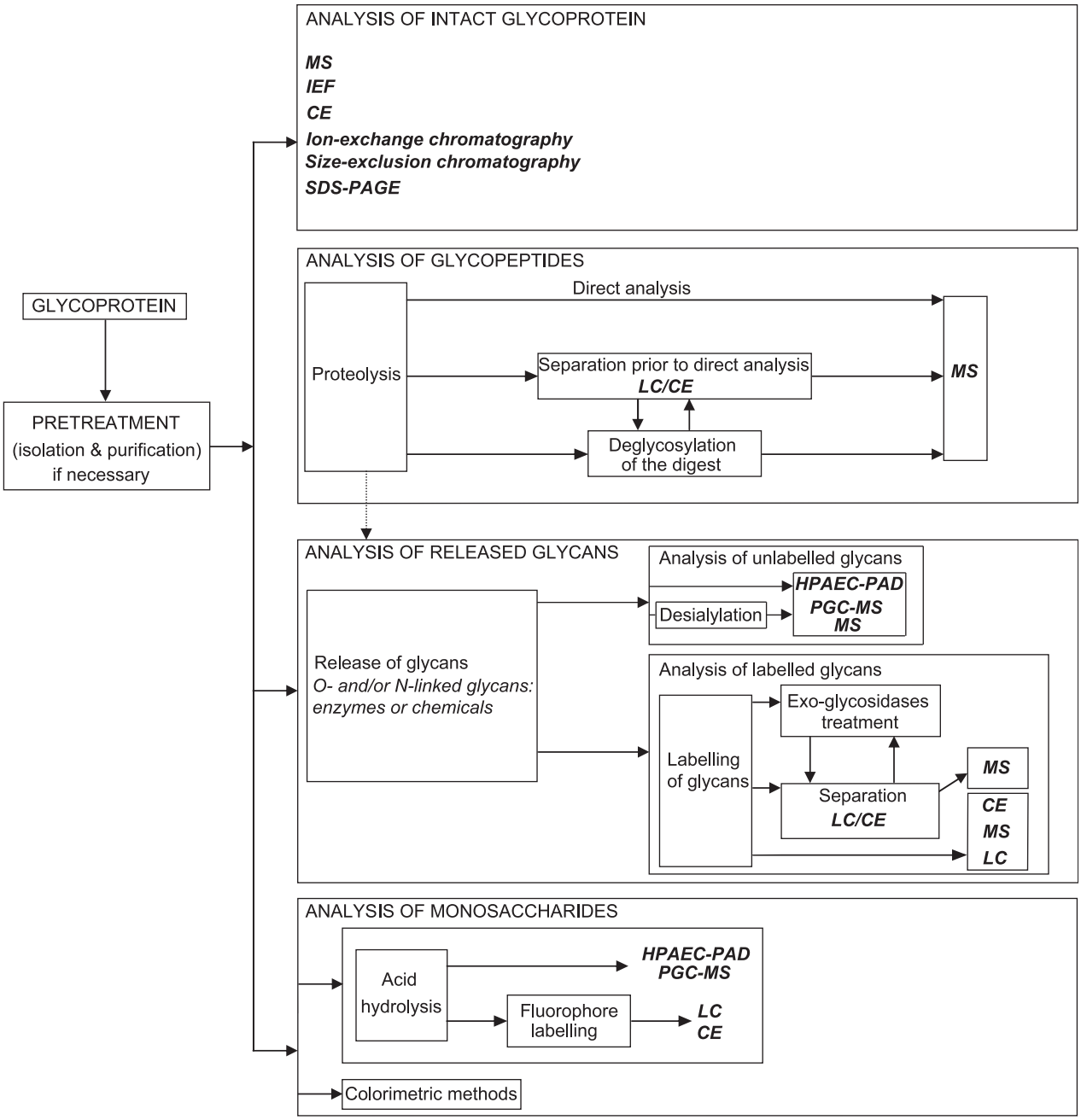

CE: Capillary electrophoresis
HPAEC-PAD: High-pH anion-exchange chromatography with pulsed amperometric detection
IEF: Isoelectric focusing
LC: Liquid chromatography
MS: Mass spectrometry
PGC: Porous graphite chromatography
SDS-PAGE: Sodium dodecyl sulfate polyacrylamide gel electrophoresis

Figure 2.2.59.-1. – *Overview of glycan analysis procedures*

After proteolysis of the glycoprotein, the following approaches can be chosen.

Direct analysis by MS (2.2.43). Care should be taken that the glycopeptide signal is not suppressed due to the presence of other peptides, where glycopeptides represent a minor portion of the total peptide mixture and where signal intensities are lower than those of non-glycosylated peptides.

Separation prior to analysis by MS. This additional step overcomes the problems raised above. Enrichment or fractionation techniques can be used either in parallel with or sequentially to direct analysis. Separation techniques such as liquid chromatography (LC) (*2.2.29*) and CE (*2.2.47*) are suitable. These techniques may be interfaced with MS to allow online MS measurements.

Deglycosylation of the glycopeptides. Identification of the different glycosylation sites of a glycoprotein is made possible by comparing peptide maps obtained by proteolytic digestion of the intact glycoprotein to those obtained when the glycoprotein is deglycosylated previously or following proteolytic digestion. The peptide mass gives information about the glycosylation sites and by calculating the mass difference between the intact glycopeptide and the deglycosylated glycopeptide, it is possible to obtain information about the attached glycans concerning composition and heterogeneity. Approaches to deglycosylation of the protein backbone are given in section 2-3-1. A separation step can be performed after or before deglycosylation.

2-3. *ANALYSIS OF RELEASED GLYCANS*

Analysis of released glycans provides a convenient way to obtain information on the various populations of glycans present on the protein (bi-, tri-, and tetra-antennary profile). The degree of sialylation can also be addressed at this stage. Depending on the chosen method, prior derivatisation/labelling may be needed to allow the detection of the glycans.

Analysis of released glycans generally involves the release and purification of glycans from the reaction mixture, followed by the labelling/derivatisation of the glycans, where needed; the glycans are then profiled (fractionation or separation).

2-3-1. **Release of glycans**

The selection of the approach used for the release of glycans will depend on the glycoprotein under test. The cleavage agent to be employed is chosen according to the type of cleavage needed and level of information required. Enzymatic or chemical cleavage may be used. Table 2.2.59.-1 gives a non-exhaustive list of enzymatic cleavage agents and their specificity.

Digestion efficiency is generally dependent on the accessibility of the glycans on the protein and hence the protein can be denatured to maximise glycosylation site exposure, unless it is desirable to distinguish between surface and buried glycans.

Chemical cleavage agents might also be used, using for example hydrazine or alkaline borohydride for β-elimination.

Table 2.2.59.-1. – *Examples of enzymatic cleavage agents*

Agents	Specificity
***N*-linked glycans release**	
Peptide-N^4-(*N*-acetyl-β-glucosaminyl)asparagine amidase (EC 3.5.1.52)	**Hydrolysis of an N^4-(acetyl-β-D-glucosaminyl)asparagine residue in which the glucosamine residue may be further glycosylated, to yield a (substituted) *N*-acetyl-β-D-glucosaminylamine and a peptide containing an aspartate residue**
- Peptide *N*-glycosidase F (PNGase F)	Release of *N*-glycan chain but no release of *N*-glycan chain containing (α1-3)-linked core fucose
- Peptide *N*-glycosidase A (PNGase A)	Release of *N*-glycan chain containing (α1-3)-linked core fucose
Mannosyl-glycoprotein endo-β-*N*-acetylglucosaminidase (EC 3.2.1.96)	**Endohydrolysis of the *N,N'*-diacetylchitobiosyl unit in high-mannose glycopeptides/glycoproteins containing the -[Man(GlcNAc)$_2$]Asn structure**
- Endo-β-*N*-acetylglucosaminidase F (endo F)	Release of high-mannose, hybrid and complex oligosaccharides
- Endo-β-*N*-acetylglucosaminidase H (endo H)	Release of high-mannose, hybrid oligosaccharides
***O*-linked glycans release**	
Glycopeptide α-*N*-acetylgalactosaminidase (EC 3.2.1.97)*	**Hydrolysis of terminal D-galactosyl-*N*-acetyl-α-D-galactosaminidic residues**
* This enzyme has limited usage because of its high substrate specificity.	

2-3-2. **Analysis of glycans**

Released glycans can be analysed or profiled by chromatographic, electrophoretic and mass spectrometric techniques, and in general by a combination of these techniques. The choice of the method can be grouped according to the nature of the glycans and level of information required.

Analysis of glycans provides information on the various populations of glycans present on the protein (high-mannose, hybrid, complex). Information on the relative amounts of branched structures might be obtained by analysis of desialylated glycans.

A separation step may be required. It implies the use of LC (*2.2.29*) and CE (*2.2.47*) as intermediate techniques. LC (*2.2.29*) can be used preparatively with individual fractions being collected (usually labelling is required) or can be directly coupled to MS (*2.2.43*).

2-3-2-1. *Analysis of unlabelled glycans*

Native glycans can be analysed by high-pH anion-exchange chromatography with pulsed amperometric detection (HPAEC-PAD), porous graphite chromatography (PGC) and MS (*2.2.43*).

HPAEC-PAD has high sensitivity and can also separate some linkage isomers. Response factors of the different signals are not equal for the different oligosaccharide structures. Absolute quantification of the glycan is not possible unless an oligosaccharide reference library is available. Quantification can be obtained by comparison with a well-characterised reference standard of the substance being tested, or by relating the peak area of each glycan to the total peak area of all glycans in the map.

PGC can also be used to separate native glycans because of its higher selectivity compared to the conventional non-polar columns. A PGC-electrospray-ionisation-MS approach can be applied for direct glycan analysis.

2-3-2-2. *Analysis of labelled glycans*

Labelling of glycans

The type of derivatisation carried out will depend on the method used to detect glycans: UV or fluorescent.

Derivatisation with fluorescent labels is the most commonly used technique for labelling glycans at their reducing end by reductive amination. One label can be attached to every single mono- and oligo-saccharide, allowing the determination of molar quantities. Table 2.2.59.-2 gives a non-exhaustive list of commonly used fluorescent labels and suitable analytical techniques.

Table 2.2.59.-2. – *Examples of fluorescent labels and suitable techniques*

Name	Acronym	Analytical techniques
2-Aminobenzoic acid	2-AA	LC (*2.2.29*), MS (*2.2.43*)
2-Aminobenzamide	2-AB	LC (*2.2.29*), MS (*2.2.43*)
2-Aminopyridine	2-AP	LC (*2.2.29*), MS (*2.2.43*)
2-Amino-9(10*H*)-acridinone	AMAC	Gel electrophoresis (*2.2.23*)
Trisodium 8-aminopyrene-1,3,6-trisulfonic acid	APTS	CE (*2.2.47*)

Permethylation of glycans may also be used when MS (*2.2.43*) is used alone for detection. It is based on the methylation of the oligosaccharides.

Analysis of labelled glycans

Labelled glycans can be analysed by analytical techniques such as LC (*2.2.29*), CE (*2.2.47*) and MS (*2.2.43*).

According to the separation properties of the glycans, glycans can be profiled and quantified by several LC (*2.2.29*) systems using an appropriate label: reversed-phase (separation by hydrophobicity), normal-phase (separation by size), and anion-exchange (separation by charge) LC.

2-4. *MONOSACCHARIDE ANALYSIS*

Monosaccharide analysis provides information on the monosaccharide composition of a glycoprotein. Analysis of monosaccharides can be performed using either colorimetric or separation methods.

2-4-1. **Colorimetric methods**

The colorimetric methods, which are based on chemical staining, provide information on the quantity of specific classes of sugars such as sialic acids, neutral sugars and hexosamines.

2-4-2. **Separation methods**

The separation methods generate quantitative information on the overall monosaccharide composition. The methods require acid hydrolysis pre-treatment of the oligosaccharide chains of the intact glycoprotein or released glycans, prior to analysis. To release sialic acids, mild acid hydrolysis or enzymatic treatment is employed. The hydrolysis step is a significant source of variability and may require product-specific validation.

Methods for separation and quantification of monosaccharides include:

- the use of HPAEC-PAD and PGC-MS, which allow the determination of molar quantities of native monosaccharides (sialic acids, neutral sugars and alcohol sugars);
- fluorophore labelling of monosaccharides followed by separation methods such as reversed-phase or ion-exchange chromatography, or CE.

3. EVALUATION AND ANALYSIS OF DATA

Data obtained from analytical methods for the analysis of glycans can be analysed and evaluated for 3 different purposes:

- confirmation of identity of individual structures or families of structures;
- confirmation of compliance of the substance being tested with qualitative requirements;
- confirmation of compliance of the substance being tested with quantitative requirements.

Specific considerations with respect to reference standards and method development of each level of analysis are set out in sections 4 and 5 respectively.

3-1. *CONFIRMATION OF IDENTITY OF INDIVIDUAL STRUCTURES OR FAMILIES OF STRUCTURES*

The analytical target for a glycan analysis method may be an individual monosaccharide (e.g. sialic acid, fucose), a defined oligosaccharide structure (e.g. tetra-sialylated, tetra-antennary glycan) or a family of structures sharing a common analytical feature (e.g. tetra-sialylated glycans, tri-antennary glycans, glycoprotein isoforms with the same charge). Confirmation of the identity of the analytical target is an essential step in the analysis and evaluation of data, and can be achieved absolutely, by verification of molecular structure, or comparatively, by comparison with an appropriate reference standard.

3-1-1. **Absolute confirmation of identity**

Absolute confirmation of the identity of glycan structures is typically achieved during product development, and should not necessarily be the target of routine analysis. Identity of the analytical target will be assigned by reference to a known molecular property of the molecule. Such absolute identification of individual structures can require multi-step approaches using enzymatic and chemical reactions, separation techniques and online or offline detection methods, and will most commonly use the charge-to-mass ratio of a molecular ion, determined using a suitable mass spectrometric method as the final basis for structure assignment.

3-1-2. **Comparative confirmation of identity**

During routine application of the analytical method, the identity of the analytical target may be confirmed by comparison with process or system suitability reference standards. These may be generated from known, well-characterised glycoproteins, which may be of the same general class as the product being tested (e.g. fetuin for complex *N*-linked glycoproteins), or may be derived from a well-characterised batch of the product being tested, which has been established as a reference standard. The following considerations apply to comparative assignment of structural identity:

- in the case of a validated high reproducibility of the retention times, the absolute retention times can be used for correct assignment;
- alternatively, a glycan marker can be injected at the beginning and at the end of the testing sequence and checked for any drifts in the retention times; based on these reference chromatograms the glycans of the test samples can be assigned;
- in cases where no standard is available to assign all glycan peaks in the test sample, absolute or normalised retention times can be used to monitor and label unidentified glycan peaks.

3-2. *CONFIRMATION OF COMPLIANCE OF THE SUBSTANCE BEING TESTED WITH QUALITATIVE REQUIREMENTS*

At this level of evaluation, the analytical results obtained with the product being tested are evaluated to demonstrate compliance with specifications. Typically this is achieved by comparison with data obtained in parallel using a reference standard of the substance being tested. In evaluating the data it is necessary:

- to establish that the analytical result obtained using the reference standard is broadly comparable to the expected result, to verify the suitability of the system; for example, in a glycan mapping procedure, this would be achieved by comparison of the map obtained with the reference substance with a provided specimen map obtained during establishment of the reference substance, and by ensuring compliance with all stated system suitability criteria;
- to demonstrate similarity of the maps obtained with the reference substance and the test substance, using any specific compliance criteria given in the specific monograph.

3-3. *CONFIRMATION OF COMPLIANCE OF THE SUBSTANCE BEING TESTED WITH QUANTITATIVE REQUIREMENTS*

3-3-1. **Quantitative measurement of analyte levels and expression of results**

In some cases, e.g. measurement of sialic acid or other monosaccharides, data can be expressed in order to obtain a molar ratio of sialic acid to glycoprotein. Data is calculated by reference to a reference standard for sialic acid and to a validated method of protein determination. Either the internal or external standard method may be used (see general chapter *2.2.46. Chromatographic separation techniques*).

3-3-2. **Quantitative expressions of separation profile**

Profiles or distribution patterns may be expressed numerically in a number of ways, including the normalisation procedure; the percentage content of each analytical target, e.g. glycan entity, is calculated by determining the response of the glycan entity as a percentage of the total response of all the entities, excluding those due to solvents or any added reagents, and those below the disregard limit. In addition, numerical expressions such as the *Z* number, which are method- and product-specific and defined in specific monographs, can be used.

4. REFERENCE STANDARDS

Reference standards for glycan analysis serve 2 functions: the verification of the suitability of the system and the confirmation that the article under test complies with specified requirements.

The reference standards used for system suitability may be:

- a reference substance for the substance being tested;
- glycan moities liberated from a fully characterised reference standard of the substance being tested;
- well-characterised glycan moities liberated from glycoproteins (e.g. fetuin, IgG);
- glycan markers characterised for identity and purity.

The reference standard used for compliance of the glycoprotein under test is a preparation of the substances being tested. It is noted that glycan analysis procedures described in specific monographs prescribe the use of a reference standard for the substance being tested and for which the glycan analysis procedure has been validated.

5. POINTS TO CONSIDER IN METHOD DEVELOPMENT

This section provides means for measuring the overall performance of the method during development. The extent of method development and analytical validation is selected on the basis of their suitability for a specific product. Depending on the chosen approach, several steps are necessary for glycan analysis, for example:

- isolation and purification (or desalting) of the glycoprotein;
- enzymatic (or chemical) treatment of the glycoprotein to selectively release either *N*- or *O*-linked glycans from the protein backbone;
- isolation and purification of the released glycans;
- verification of released sialic acid and monosaccharide residues;
- chromophore labelling of the released glycans;
- separation of the glycans, native or fluorescence labelled;
- glycan identification and quantification (e.g. determination of the *Z* number);
- determination of site occupancy based on relative quantities of glycosylated and non-glycosylated peptides.

Protein isolation and purification. Isolation and purification of the glycoprotein from its matrix may be necessary to remove all interfering substances (e.g. excipients, salts) and, when required, will be specified in the specific monograph. This must be performed in a reproducible manner in order to guarantee a quantitative recovery of the protein.

Release and isolation of oligosaccharides. The approach chosen for the release of glycans will depend on the protein under test and will be based on the types of glycosylation, i.e. *N*- or *O*-linked glycosylation. Non-compendial approaches available for the release of glycans must be optimised in order to ascertain a quantitative profiling of all glycan entities. Factors that impact cleavage efficiency, such as enzyme-to-protein concentration ratio, temperature, reaction time course, and denaturation of protein prior to digestion, must be optimised.

It is noteworthy that the enzymatic/chemical reaction must not alter the glycan composition, e.g. not destroy sialic acid residues. Where there is more than one glycosylation site, the enzymatic treatment should proportionally release all oligosaccharide moieties attached to the protein, independent of their structure and their individual position in the protein. Reproducible recovery of all glycan entities from the reaction mixture must be confirmed.

Derivatisation of released glycans. Derivatisation is usually carried out according to non-compendial protocols. Therefore, the reproducible derivatisation of all glycan entities must be verified. This may be achieved through optimisation of the reaction conditions such as amount of the derivatisation reagent, reaction temperature and time. The derivatisation reaction must not change the glycan composition, e.g. not destroy sialic acid residues.

Separation, identification and system suitability. The methods employed for glycan analysis must be capable of detecting and separating different glycan moieties to ascertain a reliable identification and quantification.

The acceptance criteria for system suitability, which also cover glycan cleavage, recovery and analysis, depend on the critical test parameters that affect the outcome of the result.

A comparison between the glycan map of the substance under test and that of a reference substance, being treated in the same conditions, is an indicator to evaluate the performance of the analytical procedure. In order to further confirm the obtained results, the analyses may be repeated with an orthogonal method. The use of a reference standard (e.g. reference substance of the product being examined, system suitability glycan marker) is essential in the establishment of system suitability parameters and validation of the analytical procedure.

Reproducibility of quantitative expression (e.g. *Z* number estimation) of glycan profiles must be verified.

Determination of site occupancy based on relative quantities of glycosylated and non-glycosylated peptides. Where site occupancy is estimated by comparison of glycosylated and non-glycosylated peptides from an enzymatically digested glycoprotein, reproducible cleavage of both forms of the peptide must be demonstrated.

6. GLYCAN ANALYSIS DECISION-MAKING FRAMEWORK

This decision-making framework is given for information and does not constitute a mandatory part of the European Pharmacopoeia.

The choice of procedures used to analyse glycans is established according to the level of information required to ensure the quality of the glycoprotein and is set up during the development phase of the product.

Figure 2.2.59.-2 provides guidance in the choice of methods to be used when glycan analysis is required.

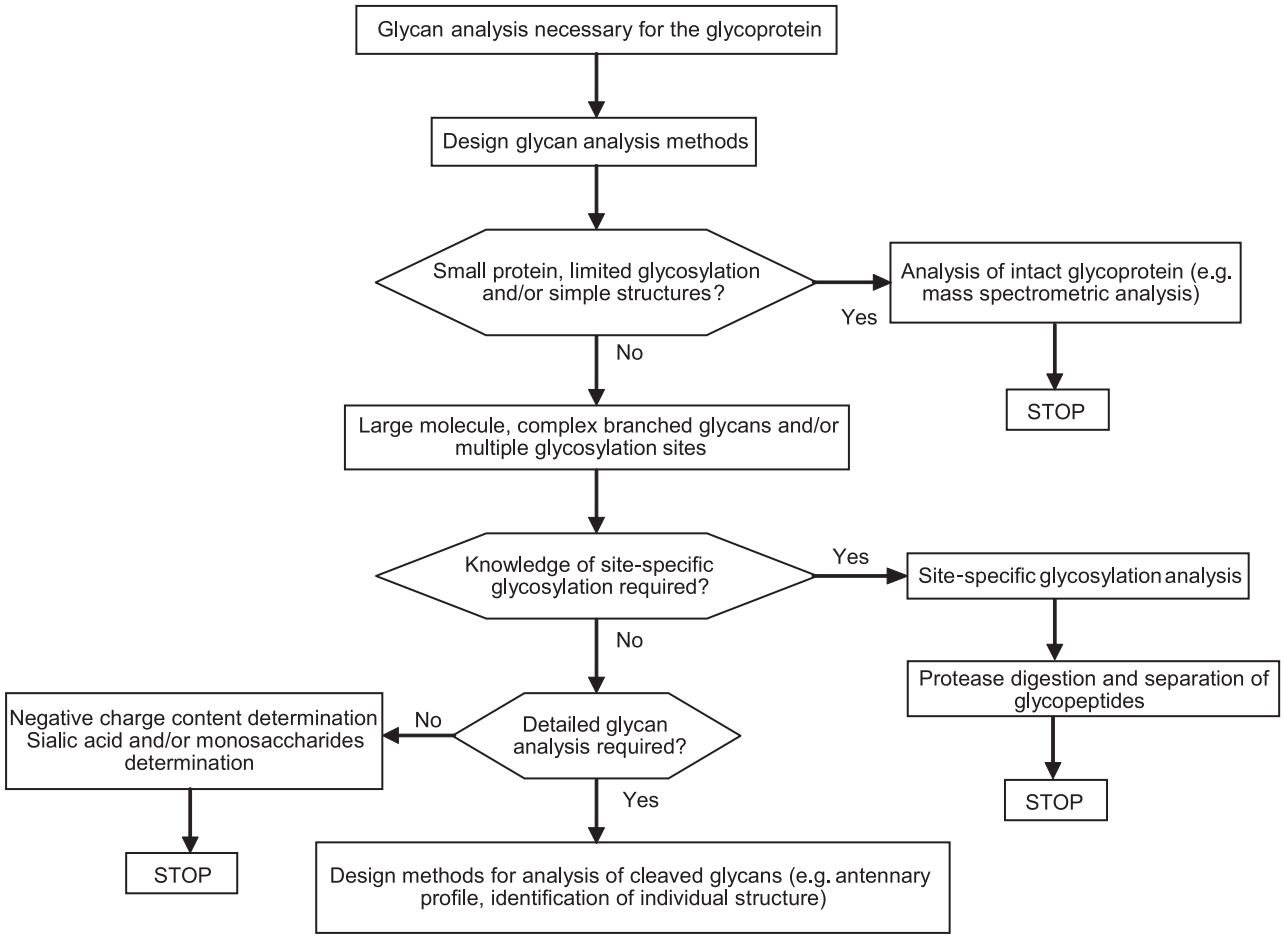

Figure 2.2.59.-2. – *Guidance on methods to be used when glycan analysis is required*

04/2008:20260

2.2.60. MELTING POINT - INSTRUMENTAL METHOD

This chapter describes the measurement of melting point by the capillary method using an instrumental method of determination.

APPARATUS

There are 2 modes of automatic observation arrangements:

- mode A: by light transmission through the capillary tube loaded with the sample;
- mode B: by light being reflected from the sample in the capillary tube.

In both modes, the capillary tube sits in a hollow of a metal block, which is heated electrically and controlled by a temperature sensor placed in another hollow of the metal block. The heating block is capable of being maintained accurately at a pre-defined temperature (± 0.1 °C) by the heating element, and of being heated at a slow and steady rate of 1 °C/min, after an initial isothermal period.

In mode A, a beam of light shines through a horizontal hollow and crosses the capillary tube. A sensor detects the beam at the end of the cylindrical hole after the capillary tube.

In mode B, a beam of light illuminates the capillary tube from the front and the sensor records the image.

Some apparatuses allow for the visual determination of the melting point.

The temperature at which the sensor signal first leaves its initial value is defined as the beginning of melting, and the temperature at which the sensor signal reaches its final value is defined as the end of melting, or the *melting point*.

Use glass capillary tubes that are open at one end, about 100 mm long, with an external diameter of 1.3-1.5 mm and an internal diameter of 0.8-1.3 mm. The wall thickness of the tube is 0.1-0.3 mm.

Some apparatuses allow for the determination of the melting point on more than 1 capillary tube.

METHOD

Introduce into the capillary tube a sufficient amount of the substance to be examined, previously treated as described in the monograph, to form in each tube a compact column about 4 mm high, and allow the tubes to stand for the appropriate time at the prescribed temperature.

Proceed as follows or according to the manufacturer's instructions. Heat the heating block until the temperature is about 5 °C below the expected melting point.

Place the capillary tube in the heating block with the closed end downwards. Start the temperature programme. When the substance starts melting, it changes its appearance in the capillary tube. As a result, the temperature of the heating block is recorded automatically following the signal changes from the photosensor due to light transmission (mode A, Figure 2.2.60.-1), or following image processing (mode B, Figure 2.2.60.-2).

Carry out the test on 2 other samples and calculate the mean value of the 3 results.

CALIBRATION

The temperature scale of the apparatus is checked periodically by measuring the melting point of certified reference materials. Use capillary tubes having the same dimensions as those used for the determination of the melting point (see Apparatus).

Prepare 3 capillary tubes for each of at least 2 certified reference materials. Carry out the test and calculate the mean value of the 3 results for each material.

SYSTEM SUITABILITY

In addition to the calibration, carry out a verification, before the measurements, using a suitable certified reference material whose melting point is close to that expected for the substance to be examined.

Prepare 3 capillary tubes. Carry out the test and calculate the mean value of the 3 results.

The mean value is within the tolerance given on the certificate supplied with the certified reference material.

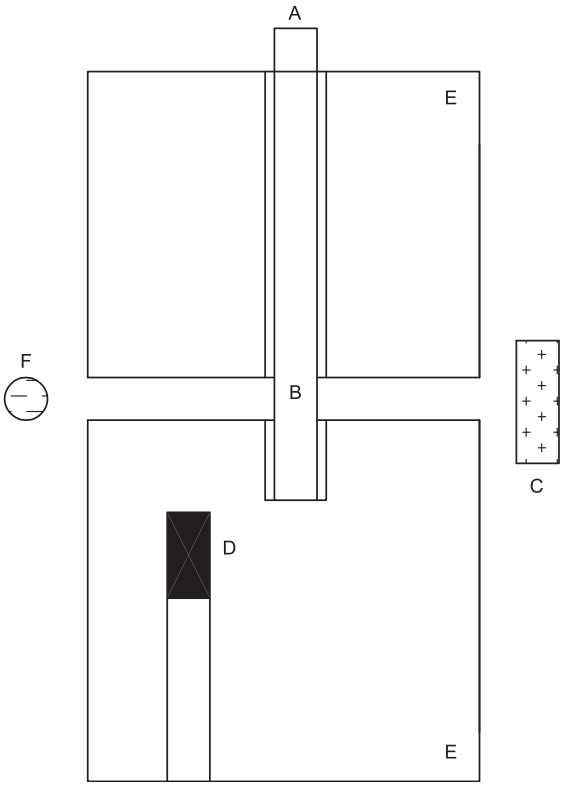

A. glass capillary tube
B. sample
C. photosensor
D. temperature sensor
E. heating block
F. light source

Figure 2.2.60.-1. – *Mode A: transmission*

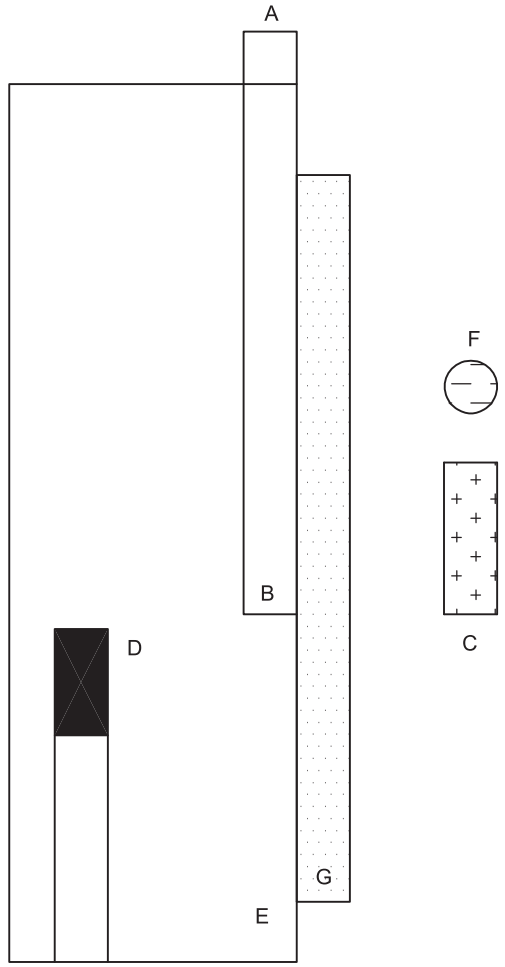

A. glass capillary tube
B. sample
C. imagesensor
D. temperature sensor
E. heating block
F. light source
G. transparent plate

Figure 2.2.60.-2. – *Mode B: reflexion*

01/2013:20261

2.2.61. CHARACTERISATION OF CRYSTALLINE SOLIDS BY MICROCALORIMETRY AND SOLUTION CALORIMETRY

For the purpose of this chapter, crystalline material, partially crystalline material and amorphous material are considered as solids.

INTRODUCTION - THE CONCEPT OF CRYSTALLINITY

The perfectly ordered crystal lattice with every molecule in its expected lattice position is an ideal that is seldom, if ever, achieved. The other extreme is the amorphous state, in which a solid contains the maximum possible density of imperfections (defects of various dimensionalities), such that all long-range order is lost while only the short-range order, imposed by its nearest neighbours, remains. Real crystals lie somewhere between these 2 extremes. A crystal's position on a scale bounded by these 2 extremes is termed *crystallinity*.

All real crystals, even in the pure state, possess some lattice imperfections or defects, which increase both the energy (enthalpy under conditions of constant atmospheric pressure) and the disorder (expressed as the entropy) of the crystal lattice. A crystal with a relatively low density of imperfections is said to be highly crystalline and to

possess a high crystallinity. By contrast, a particle with a relatively high density of imperfections is said to be partially amorphous and to possess a low crystallinity. In ideal terms, a totally amorphous particle corresponds to zero crystallinity. Amorphous particles may contain somewhat ordered domains that can act as nuclei for crystallisation; such so-called amorphous particles are said to possess a low-level but finite crystallinity.

The ability to detect and to quantify the amount of amorphous material within a highly crystalline substance is of great importance during the development and subsequent manufacture of a pharmaceutical preparation.

In reality, a powder probably contains particles with different degrees of crystallinity, just as it may contain particles with varying sizes and shapes. The lower the crystallinity of a solid, the greater its enthalpy and entropy. The increase in enthalpy is never totally compensated for by the increase in entropy; therefore, the Gibbs free energy, which reflects the balance between them, actually increases. Hence, the lower the crystallinity of a material (powder), and consequently the greater its amorphous character, the greater its apparent intrinsic solubility and dissolution rate, but the lower its thermodynamic stability. Because of the great relevance of these properties, crystallinity is also an important property and requires measurement by a suitable method.

In the following chapter, the crystallinity or the content of amorphous parts of a powder are measured by calorimetric methods such as microcalorimetry or solution calorimetry, although other methods could be used (e.g. see general chapter *2.9.33. Characterisation of crystalline and partially crystalline solids by X-ray powder diffraction (XRPD)*).

Many substances are capable of crystallising in more than one type of crystal lattice, which is known as polymorphism. If water or a solvent is incorporated in the crystal lattice the crystals are termed hydrates or solvates. Because of the different crystal packing, and/or molecular conformation and lattice energy, they usually exhibit different physical properties. For simplicity, calorimetry measurements for degree of crystallinity determination discussed here assume only one solid crystalline form present in the material of interest. The theory and experimental technique can be easily expanded to polymorphic systems with proper consideration of the enthalpy differences among the polymorphs.

METHOD 1 - MICROCALORIMETRY (DETERMINATION OF AMORPHOUS CONTENT)

Most chemical, physical and biological processes are associated with the exchange of heat. Microcalorimetry is a highly sensitive technique to monitor and quantify both exothermic (heat producing) and endothermic (heat absorbing) changes associated with those processes. The technique allows the determination of the rate and extent of chemical reactions, changes of phase or changes of structure.

Thermal events producing only a fraction of a microwatt can be observed using microcalorimetry. This means that temperature differences less than 10^{-6} K must be detectable. Microcalorimetry typically uses the heat flow (heat leakage) principle, where the heat produced (or absorbed) in a thermally defined vessel flows away (or into) in an effort to re-establish thermal equilibrium with its surroundings. Exceptional thermal stability with its surrounding has to be achieved either by a heat sink or an electronically regulated surrounding.

Heat energy from an active sample in the reaction vessel is channelled typically through Peltier elements; they act as thermoelectric generators using the Seebeck effect. The heat energy is converted into a voltage signal proportional to the heat flow.

Results are typically presented as a measure of the thermal energy produced per unit of time (Watt) as a function of time.

APPARATUS

Microcalorimeters are typically designed as twin systems with a measuring vessel and a reference vessel. Vessels are typically made of glass or stainless steel. For certain applications specially designed vessels which allow the addition of a gas, a liquid or a solid material may be used.

CALIBRATION

The microcalorimeter is calibrated for heat flow (energy per time unit) using either calibrated external or internal electrical heat sources or a suitable standard reaction.

SENSITIVITY

The sensitivity of the microcalorimetric method can be assessed based on an appropriate standard sample analysed according to the corresponding method in conjunction with the determination of the instrument baseline noise.

PROCEDURE

Weigh in a suitable vessel an appropriate quantity of the substance to be examined. Close the vessel carefully to avoid any evaporation of solvents and place the vessel in the sample holder. If appropriate, allow the vessel to equilibrate at the temperature of the measurement before placing it in the measuring position.

Begin the analysis and record the heat flow, with the time on the abscissa and the heat flow on the ordinate (specify the direction of exothermic or endothermic heat flow).

DETECTION AND QUANTIFICATION OF AMORPHOUS CONTENT IN POWDERS

The amorphous state is metastable with respect to the crystalline state; recrystallisation may therefore occur. The measurement of the heat of recrystallisation enables the amorphous content to be determined by the area of the recrystallisation peak. By relating the output from the microcalorimeter for a sample to that obtained from an amorphous standard, it is possible to quantify the amorphous content of the sample. The range of amorphous content covered by this method depends on the individual substance to be tested; in favourable cases limits of detection below 1 per cent can be reached.

Recrystallisation can be initiated by subjecting the sample to higher relative humidity or an atmosphere containing organic vapour. The sample is typically placed in an ampoule which also contains a small test-tube containing an aqueous saturated salt solution, an organic solvent, or a solvent mixture.

The heat of recrystallisation is typically measured using a fixed sample mass placed in a glass or steel vessel. The test-tube containing a saturated salt solution or an organic solvent is chosen to be large enough to allow a full saturation of the atmosphere above the sample. The mass of the sample and the nature of the vapour atmosphere above the sample are chosen so that recrystallisation occurs in such a way that a distinct peak is observed, clearly separated from initial thermal events caused by introduction of the sample.

The conditions under which the transition of the amorphous phase to a thermodynamically more stable crystalline state occurs will have a significant impact on the time of recrystallisation. In particular, physical mixtures of purely amorphous and crystalline material will behave differently from a partially crystalline material. These effects should be considered when developing a method.

A typical response for the recrystallisation of a mainly amorphous material is shown in Figure 2.2.61.-1. The first part of the curve represents several concurrent processes taking place simultaneously, such as the absorption of water vapour into the amorphous parts of the powder and the generation of water vapour from the test-tube. After this initial response there is a large exothermic response caused by the recrystallisation of the amorphous material. Also included, but not seen, are the expulsion of excess water from the

recrystallised parts and its condensation. Thus, the area under this exothermic recrystallisation response is proportional to the heat of recrystallisation.

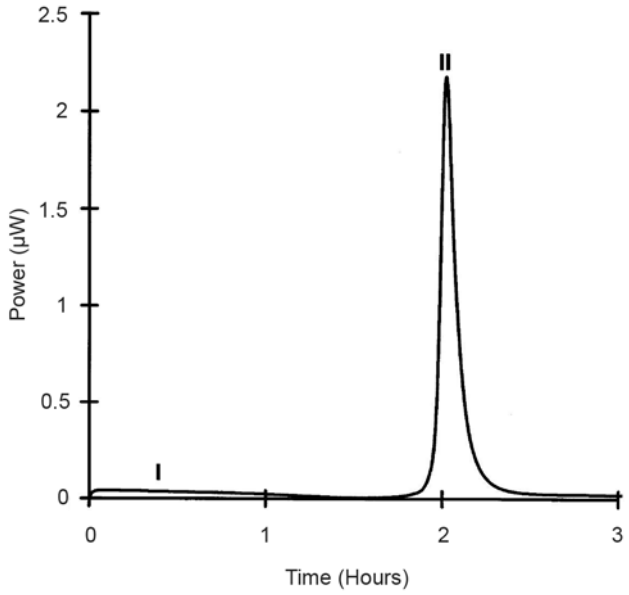

Figure 2.2.61.-1. – *Typical microcalorimetric output of power (in µW) as a function of time (in hours): amorphous collapse peak (I) and crystallisation peak (II) for mainly amorphous lactose at 25 °C and 75 per cent relative humidity*

METHOD 2 - SOLUTION CALORIMETRY (DETERMINATION OF CRYSTALLINITY)

Solution calorimetry provides a means of determining enthalpy of solution (i.e. heat of solution under constant atmospheric pressure) of a substance. Enthalpy of solution is defined as the enthalpy of the substance dissolved in the solution to a defined concentration minus the enthalpy of the original substance. The solvent for the dissolution process must be such that the mass of solid dissolves within a time frame that matches the response time of the calorimeter, as discussed below. The enthalpy of solution is proportional to the amount of solid being dissolved. This amount may be defined as 1 mol for molar enthalpy or as 1 g for specific enthalpy. If the substance possesses adequate purity (as determined by the degree of accuracy required) and if its molecular mass is known, the molar enthalpy is preferred, otherwise the specific enthalpy must be used. The enthalpy of solution is weakly dependent on both the temperature, which is usually 25.0 °C, and the final concentration of the dissolved solute.

It is usually preferred to express the crystallinity, P_c, of a substance on a percentage scale. This procedure requires 2 reference standards, namely a highly crystalline sample assuming 100 per cent crystallinity and having a measured enthalpy of solution of ΔH_c^s, and an amorphous sample assuming 0 per cent crystallinity and having a measured enthalpy of solution of ΔH_a^s. From these values and from the measured enthalpy of solution, ΔH_s^s, of the solid under study, the percentage crystallinity of the solid, P_c, may be calculated as follows:

$$P_c\,(\%) = 100\,(\Delta H_s^s - \Delta H_a^s)\,/\,(\Delta H_c^s - \Delta H_a^s)$$

Clearly, crystallinity expressed on a percentage scale depends on 3 measured values and the enthalpies of solution may be replaced by other corresponding physical quantities that depend on crystallinity. The value of the percentage crystallinity of a sample, however, depends not only on the nature and method of preparation of the 2 reference standards, but also on the choice of the physical quantity that is measured.

The enthalpy of solution is measured either by an isoperibol (constant perimeter, i.e. jacket) solution calorimeter or by an isothermal (constant temperature) solution calorimeter. Typically, at least 3 measurements are made with each sample. The mean of these values is then calculated. The exact requirements will depend upon the equipment capability and degree of accuracy needed.

ISOPERIBOL SOLUTION CALORIMETRY

In the isoperibol solution calorimeter, the heat change during the solution process causes a corresponding change in temperature of the solvent-solute system (i.e. solution). This temperature change is measured by a temperature sensor, which is wired to an electrical circuit that records an electrical signal corresponding to the temperature change. Typically, this temperature change in an electronic form is measured at precisely defined time intervals to produce temperature-time data that are collected, analysed by a computer, and then plotted. A blank run without addition of the solid solute to the solvent normally shows no discernible change in the slope of the temperature-time plot.

For isoperibol solution calorimeters, response is fairly rapid, but corrections must be made for any heat losses to or heat gains from the bath. Therefore, isoperibol solution calorimeters are more advantageous than isothermal solution calorimeters when the solution process is relatively fast. For all measurements of enthalpy of solution using isoperibol solution calorimeters, the choice of solvent is critical. The nature and mass of the solvent and the mass of sample allow the total heat change, corresponding to total dissolution of the solid, to proceed to completion within 5 min under vigorous stirring at a constant rotational speed within the range of 400-600 r/min.

The effective heat capacity of the calorimeter cell and its contents is determined for every calorimeter run. This determination is accomplished by electrical heating of the contents of the calorimeter cell. The effective heat capacity is determined according to 1 of 2 protocols: either by making 1 determination after ampoule breakage or by making 1 determination before and a 2nd determination after ampoule breakage and then averaging the 2 results. The accuracy and reliability of the electrical heating are established by the accuracy and reliability of the aforementioned chemical calibrations.

ISOTHERMAL SOLUTION CALORIMETRY

In the isothermal (constant temperature) solution calorimeter, the heat change during the solution process is compensated for by an equal but opposite energy change, such that the temperature of the solvent-solute system (i.e. solution) remains essentially constant. This equal but opposite energy change is measured and, when its sign is reversed, provides the enthalpy of solution. For isothermal calorimeters, response is relatively slow, but the compensation process eliminates the effects of heat losses to or heat gains from the bath. Therefore, isothermal solution calorimeters are more advantageous than isoperibol solution calorimeters when the solution process is relatively slow.

SOLUTION CALORIMETER CALIBRATION

To ensure the accuracy of the calorimeter, chemical calibrations must be performed on a regular basis. For an endothermic solution process, the calibration of the calorimeter is checked by measuring the heat absorbed during the dissolution of potassium chloride in distilled water at 298.15 K (25.0 °C). The established enthalpy change in this endothermic process is 235.5 J/g (17.56 kJ/mol). For an exothermic solution process, the calorimeter is checked by measuring the heat evolved during the dissolution of 5 g per litre of tromethamine [tris(hydroxymethyl)aminomethane, THAM] in a 0.1 mol/L aqueous hydrochloric acid solution at 298.15 K (25.0 °C). The established heat for the aforementioned process is – 246.0 J/g (– 29.80 kJ/mol).

SAMPLE HANDLING

The chemical and physical stability of solids may decrease with decreasing crystallinity. In particular, solids of low crystallinity, especially amorphous solids, tend to sorb water vapour from the atmosphere, leading to crystallisation and a corresponding gain in crystallinity. For these reasons, anhydrous samples whose crystallinity is to be determined must be stored at zero humidity or below critical humidity levels in sealed chambers containing a desiccant, preferably containing an indicator of effectiveness. If crystallinity-humidity studies are to be carried out, the sample is stored in a sealed chamber containing a saturated salt solution to provide a defined relative humidity.

07/2011:20264

2.2.64. PEPTIDE IDENTIFICATION BY NUCLEAR MAGNETIC RESONANCE SPECTROMETRY

This general chapter is to be used in conjunction with general chapter *2.2.33. Nuclear magnetic resonance spectrometry* in the context of peptide identification. The approach to be followed is qualitative and consists of comparing the nuclear magnetic resonance (NMR) spectrum of a test sample with that of a reference sample acquired under identical conditions.

This general chapter mainly applies to the use of proton NMR (^{1}H NMR) spectrometry, to confirm the identity of small peptide products (up to approximately 15 amino acids). It is also applicable when using ^{13}C NMR spectrometry with some modifications. The scope is restricted to the use of one-dimensional NMR spectrometry.

GENERAL PRINCIPLES

Equipment. Unless otherwise specified, an apparatus with a field strength giving an operating frequency for proton NMR of at least 300 MHz.

Spectral acquisition conditions and their optimisation. After introduction into the magnet, the sample is allowed to come to thermal equilibrium, especially if analysis is carried out at a temperature significantly different from room temperature: monitoring the lock signal is often a valuable visual guide to the progress of this process.

The spectral width must encompass the complete spectrum of the peptide, with an empty spectral region at each side. Typically, a spectral width of 12 ppm or 16 ppm is appropriate.

The following parameters may be optimised to improve resolution of characteristic peaks: temperature and/or pH primarily, buffer and peptide concentrations. Control of sample temperature is recommended but is not mandatory; if not used, the effect of small temperature changes on the appearance of the spectrum is validated.

The number of data points collected is such as to define peaks adequately.

Solvent suppression is not recommended but, if used, the intensities of peaks close to the solvent resonance may be affected and this has to be validated when comparing spectra.

Chemical shift referencing. For samples in aqueous solution, sodium 2,2-dimethyl-2-silapentane-5-sulfonate (DSS), sodium 3-(trimethylsilyl)propionate (TSP) or a deuterated analogue (TSP-d_4) are appropriate, and the chemical shift of the methyl signals is often set to 0 ppm. Either the reference material is added at low amounts (10-100 ppm has been found to be appropriate) to the deuterated water used to dissolve the final sample, or an easily recognised internal resonance that is consistently present (such as acetate anion) can be used as a secondary reference. In this case, a validation spectrum obtained under the same spectral conditions is used to define the chemical shift of the secondary standard.

Sample size. Usually a few milligrams are used. If sample sizes are variable, the effects of this variation on the appearance of the spectrum are validated.

Sample preparation. The test and reference samples must be comparable in terms of concentration, pH and buffer composition. Typically, samples in solution are lyophilised, and the dried samples dissolved in deuterated water or a buffer in deuterated water. It may be worthwhile to lyophilise a solution in deuterated water one or more times ('deuterium exchange') as this reduces the intensity of strong solvent signals; volatile process impurities such as ethanol will also be lost. Use of buffer for the final sample preparation can reduce aggregation and improve spectral reproducibility by reducing batch-to-batch pH variation. Some probes are intolerant to high salt concentrations, but ionic strengths up to 200 mM sodium chloride are normally tolerated. High salt concentrations tend to increase 90° pulse length.

VERIFICATION OF IDENTITY

Determination of key spectral factors. Use of a qualitative approach does not entail stringent requirements on spectral parameters (for example, fast pulse repetition rates can be used, as full relaxation is not required). The use of short pulse widths (for example, a 30° pulse) and fast repetition rates will have no significantly deleterious effect on spectra, and will allow faster acquisition of acceptable signal-to-noise ratios. Variation in the pulse width and acquisition time within wide limits will not affect the ability to compare spectra. The number of scans collected must give appropriate signal-to-noise ratios for low intensity resonances and therefore a minimum signal-to-noise ratio of 50:1 is recommended.

Identification of characteristic resonances. It is possible to compare either the complete spectrum or a portion of it. Comparison of spectra of relevant samples will highlight regions of the spectrum that are distinctive, and comparison can be constrained to these regions. It is important to define resonances from impurities, such as residual solvents, which may be essentially irrelevant to product quality and which may vary in intensity between batches.

Spectral comparison. See the provisions of general chapter *2.2.33*.

01/2013:20265

2.2.65. VOLTAMETRIC TITRATION

In voltametric titration the end-point of the titration is determined by following the variation of the voltage measured between 2 electrodes (either 1 indicator electrode and 1 reference electrode or 2 indicator electrodes) immersed in the solution to be examined and maintained at a constant current as a function of the quantity of titrant added.

Apparatus. The apparatus comprises an adjustable current source and a voltmeter; the detection system generally consists of an indicator electrode (for example, a platinum electrode, a rotating-disc electrode or a carbon electrode) and a 2nd electrode (for example, a platinum electrode, a rotating-disc electrode or a carbon electrode).

Method. Set the current to the indicator electrode as prescribed in the monograph and plot a graph of the initial voltage and the values obtained during the titration as functions of the quantity of titrant added. Add the titrant in not fewer than 3 successive quantities equal to a total of about 80 per cent of the theoretical volume corresponding to the presumed equivalence point. The 3 values must fall on a straight line. Continue adding the titrant beyond the presumed equivalence point in not fewer than 3 successive quantities. The values obtained must fall on another straight line. The point of intersection of the 2 lines represents the end-point of the titration.

Using titration systems for voltametric titration with 2 indicator electrodes, the whole titration curve is recorded and used to determine the end-point.

01/2014:20266

2.2.66. DETECTION AND MEASUREMENT OF RADIOACTIVITY

INTRODUCTION

Within the context of the European Pharmacopoeia, the term 'radioactivity' is used both to describe the phenomenon of radioactive decay and to express the physical quantity of this phenomenon. In the monographs on radiopharmaceutical preparations, the detection and measurement of radioactivity are performed for different purposes: verification of the characters, identification, determination of radionuclidic and radiochemical purity, as well as determination of the radioactivity in a substance (assay).

Under these assumptions, the measurement can be qualitative, quantitative or both, depending whether it is directed to the identification of the radionuclide or the determination of its activity (rate of decay) or both of them.

Radioactive sources can produce various types of emissions, such as alpha particles, electrons, positrons, gamma- and X-rays, according to the radionuclidic composition.

Each radionuclide yields characteristic emissions, with specific energies and relative intensities. Such radiations can be detected as a result of their ionising properties in an ionisation chamber but without further characterisation; when they are detected and analysed using a spectrometer, an energy spectrum is obtained. A detailed spectrum analysis is typically used to identify radionuclides present in a sample. Spectrometry can also be used for quantitative determination of the radioactivity in sources made of a single radionuclide or radionuclide mixtures or of the individual radionuclides present.

A measurement of radioactivity is generally performed by counting the number of detected decay events (emissions). Therefore, the geometry of the sample during the measurement of radioactivity and the acquisition time strongly influence the result. In general, the measurement geometry must correspond to a calibrated geometry and the acquisition time must be long enough to reach sufficient counting statistics.

A measurement of radioactivity can be done in a stand-alone mode (e.g. using an ionisation chamber or a spectrometer) or in combination with a separation technique (e.g. radiochromatography) to account for relative contributions from different radioactive chemical species that may be present in a mixture.

MEASUREMENT OF RADIOACTIVITY

A direct determination of the radioactivity of a given sample, in becquerel (Bq), may be carried out if the decay scheme of the radionuclide is known, but in practice many corrections are required to obtain accurate results. For this reason, it is possible to carry out the measurement with the aid of a primary standard source or by using measuring instruments such as an ionisation chamber or a spectrometer calibrated using suitable standards for the particular radionuclides.

A spectrometer is used when measuring the radioactivity of radionuclides in a mixture, each radionuclide being identified by its emissions and their characteristic energies.

All measurements of radioactivity must be corrected for dead-time losses and by subtracting the background signal due to radiation in the environment and to spurious signals generated in the equipment itself.

The radioactivity of a preparation is stated at a given date. If the half-life of the radionuclide is less than 70 days, the time is also indicated. This statement of the radioactive content must be made with reference to a specified time zone. The radioactivity at other times may be calculated from the exponential decay equation or from tables.

In general, a correct measurement of radioactivity requires that consideration is given to some or all of the following:

Dead-time losses. Due to the finite resolving time (dead time) of the detector and its associated electronic equipment, it may be necessary to correct for losses by coincidence. The resolving time of a counter is the minimum time interval required by the counter to resolve 2 single pulses. Incident radiation events at shorter intervals may not be detected or may be detected as a single event with the summed energy. These losses are sometimes referred to as 'dead-time losses'. For a counting system with a fixed dead time τ following each count, the true count rate, per second, is calculated using the following expression:

$$\frac{N_1}{1 - N_1\tau}$$

N_1 = the observed count rate, per second;

τ = the dead time, in seconds.

With some equipment this correction is made automatically. Corrections for losses by coincidence must be made before the correction for background radiation.

Correction for decay during measurement. If the time period of an individual measurement, t_m, is not negligibly short compared with the half-life of the radionuclide, $T_{1/2}$, the decay during this measurement time must be taken into account. For example, there is a 5 per cent cumulative loss of counts due to decay during a counting period that is 15 per cent of the half-life of the radionuclide.

After having corrected the instrument reading (count rate, ionisation current, etc.) for background signals and, if necessary, for losses due to electronic effects, the instrument reading corrected to the beginning of the individual measurement is calculated using the following expression:

$$\frac{R\,(\lambda t_m)}{1 - (e^{-\lambda t_m})}$$

R = instrument reading before decay correction, but already corrected for background signal, etc.;

λ = radionuclide decay constant ($\ln 2/T_{½}$);

e = base of natural logarithm;

t_m = measurement duration.

Statistics of radioactivity measurement. The results of determinations of radioactivity show variations that derive mainly from the random nature of nuclear transformations. Counting for any finite time can yield only an estimate of the true rate of nuclear transformations. A sufficient number of counts must be registered in order to compensate for variations in the number of transformations per time. In the case of measurement of radioactivity, the standard deviation of the recorded counts is the square root of the counts, so at least 10 000 counts are necessary to obtain a relative standard deviation of not more than 1 per cent.

Linearity. The linearity of an instrument is the range of radioactivity for a particular radionuclide over which its efficiency remains constant.

The linear range of a radioactivity measurement assembly can be determined by repeatedly counting a radioactive sample in a fixed geometry as it decays from an activity level that is above the linear range. After correction for the background signal, the natural logarithm of the count rate data is plotted against the elapsed time after the first measurement (Figure 2.2.66.-1).

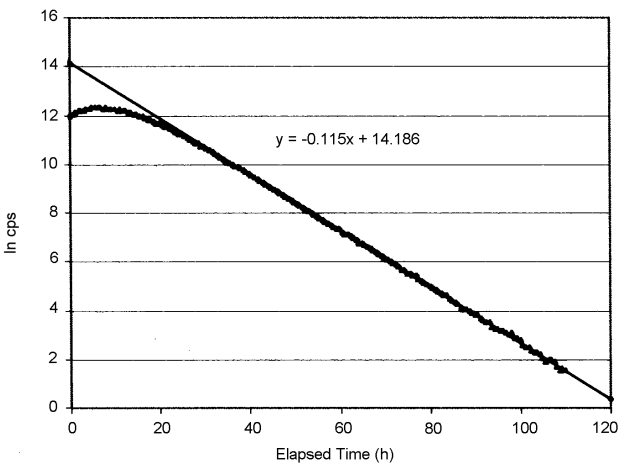

Figure 2.2.66.-1. – *Plot showing the measured and extrapolated count rate (natural logarithm of counts per second (cps)) from a technetium-99m source as a function of time, starting with a level of radioactivity above the linear range of the measuring equipment*

Linear regression analysis of the central, linear portion of the data set yields a slope which is the decay constant λ, which has a characteristic value for each radionuclide:

$$\ln \text{cps} = -\lambda t + c$$

c represents the natural logarithm of the count rate at $t = 0$ of a perfectly linear instrument.

The resulting regression equation is used to calculate the theoretical count rate at each time that the actual data were recorded. Where the deviation of the measured count rate from the theoretical count rate is unacceptably high, the linear range of the measuring equipment has been exceeded.

Alternatively, a series of dilutions can be made of a radioactive solution of known radioactivity concentration. Equal volumes of each of the dilutions are then counted using standardised geometry and counter settings. The ratio of the count rate for each sample (after correction for background signals and decay) to the calculated radioactivity of the respective sample in Bq is the counting efficiency. The range over which this ratio is constant is the useable range of the measuring equipment for the radionuclide concerned.

The limit of detection and the limit of quantification for equipment and procedures used for radioactivity measurement must be established before their routine use.

Limit of detection. The limit of detection (LOD) of an individual procedure is the lowest amount of radioactivity in a sample that can be detected but not necessarily quantified as an exact value. In practical terms this requires an estimate of the background signal and its standard deviation. The LOD is usually considered to be 3 times the standard deviation of the background signal.

Limit of quantification. The limit of quantification (LOQ) of an individual procedure is the lowest amount of radioactivity in a sample that can be quantitatively determined with suitable precision and accuracy. The LOQ is used particularly for the determination of impurities and/or degradation products. In practical terms the LOQ is usually considered to be 10 times the standard deviation of the background signal.

MEASUREMENT OF RADIOACTIVITY USING IONISATION CHAMBERS

Apparatus. Ionisation chambers (including dose calibrators) are the most common equipment for the measurement of radioactivity in the practice of radiopharmacy. It generally can measure activities from a few tens of kBq to hundreds of GBq. It usually comprises a sealed well-type ionisation chamber and built-in electronics to convert the detector signal to a measure of radioactivity.

The chamber is filled with a gas across which an electrical field is applied. When the gas is ionised by the radiation emitted by the source, the resulting ionisation current is measured and related to the radioactivity present in the ionisation chamber. The ionisation current is influenced by the applied voltage, the energy and the intensity of the radiation and the nature and pressure of the gas. The instrument settings (calibration factor) may be adjusted to keep a direct relationship between the ionisation produced by the radiation of a specific radionuclide and the radioactivity value obtained for each measurement geometry.

As an ionisation chamber measures only the current resulting from the overall ionisation produced within the chamber, it cannot discriminate between the emissions of different radionuclides.

For an accurate measurement of the radioactivity of a specific radionuclide, the measurement must be corrected for the contributions to the ionisation current caused by radionuclidic impurities present in the preparation.

The activity levels to be measured are limited by saturation considerations, the range of the amplifier and the design of the chamber itself. The linearity range of the ionisation chamber is established as described above under Linearity.

The ionisation chamber must be shielded to minimise background signals to an acceptable level.

Method. The sample is positioned inside the well of the ionisation chamber at a given position, using a holder. After putting the sample in the ionisation chamber, the activity reading is made once the response is stable. Measuring the sample under exactly the same geometrical conditions as the calibration source will yield the most accurate results. If necessary, dilute the preparation to be measured to the same volume as that of the calibration source.

Calibration. The ionisation chamber is calibrated taking into account the shape, dimensions, material of the container, volume and composition of the solution, the position within the chamber and the radionuclide being measured. Limits for uncertainty in calibration can be found in national and international regulations.

Calibrate the ionisation chamber at least once a year, by using sources of radionuclides traceable to national or international standards in the appropriate containers (vial, syringe) with regard to geometry. Establish and implement subsidiary correction factors to take account of the differing configurations of the radionuclides to be measured. Perform a linearity check of the instrument's response over the complete range of energies and activities for which the equipment is used.

For each setting and before each use (minimum once on each day of use) perform a constancy check of the ionisation chamber using standard sources of radionuclides with long half-lives to verify its calibrated state. A check with a reference source, such as caesium-137, must be performed on each day of use to verify that the ionisation chamber is still in its calibrated state.

MEASUREMENT OF RADIOACTIVITY USING SOLID-STATE DETECTORS

Solid-state detectors include scintillating plastic fluors and crystals, and semiconductors. Further to their application in spectrometry (see section Spectrometry), solid-state detectors can be used for the measurement of radioactivity. In particular, due to their high sensitivity, plastic and crystal scintillation detectors are used in counting low levels of radioactivity. Dead-time losses must be carefully considered with these types of detectors. Semiconductor detectors are used when a higher

energy discrimination is required, for example in mixtures of radionuclides or when there are potential radionuclidic impurities with emissions of similar energy.

Apparatus. The equipment consists of a shielded detector comprising a plastic or crystal scintillator coupled to a photomultiplier, or a semiconductor, which are connected to an amplifier and counting electronics. The system may have an adjustable energy window, used for selecting a counting region of the radionuclide energy spectrum that may be adjusted by the operator.

Instruments have different properties of energy resolution and detection efficiency depending on the type of detector and its volume and geometry. Lower efficiency requires a longer counting time.

Samples to be measured may be placed in front of the detector or into the well of a well-type detector. Measuring chambers may be enclosed in the detector shielding and single samples may be introduced using lids or other positioning systems to ensure correct measurement geometry.

A scintillation detector can be used for dynamic radioactivity measurement when, for example, the eluate of a liquid chromatograph is directed over or through a detector, see section on Detection and measurement of radioactivity in combination with a separation technique.

Method. Ensure that the sample radioactivity gives a counting rate in the linearity range of the equipment. The measurement is started after any shielding is in place or the well cover is replaced and the counting time is selected to reach sufficient counts for a statistically significant value.

Calibration. The detector has to be calibrated by measuring its efficiency using a source of the radionuclide in question traceable to national or international standards. Calibration in terms of efficiency uses sources such as caesium-137, cobalt-60, barium-133 and others covering the desired energy range.

MEASUREMENT OF RADIOACTIVITY USING LIQUID SCINTILLATION DETECTORS

Liquid scintillation counting is commonly used for beta-particle emitting samples, but is also used for alpha-particle emitting samples. For the principles of the detection of radioactivity using liquid scintillation detectors see under Beta-particle spectrometry below.

Calibration. In order to take into account the loss of counting efficiency due to quenching, the liquid scintillation counter may make use of an external source, typically barium-133 or europium-152, which is brought close to the sample vial to release Compton electrons. The shape of the resulting spectrum is analysed automatically to compute a quench-indicating parameter. This parameter can then be related to the counting efficiency measuring sources of known activity at a determined level of quenching agent. The obtained quench curve allows the determination of the activity of an unknown sample knowing the count rate and the value of the quenching parameter.

DETERMINATION OF HALF-LIFE

The half-life is a characteristic of the radionuclide that may be used for its identification. The half-life is calculated by measuring the variation of radioactivity of a sample to be tested as a function of time. Perform the measurements in the linearity range of a calibrated instrument.

Apparatus. Half-life can be measured by using any type of quantitative radioactivity detector provided it is used within a linearity range throughout the range of activities that are present during the measurement and the geometry is not changed during the measurement.

For preparations containing a radionuclide with a short half-life and when stated in a monograph, determination of the approximate half-life contributes to the identification.

Method.

Half-life. The preparation to be examined is used as such or diluted or dried in a capsule after appropriate dilution. The radioactive sample is prepared in a manner that will avoid loss of material during handling. If it is a liquid (solution), it is contained in a closed flask or a sealed tube. If it is a residue from drying in a capsule, it is protected by a cover consisting of a sheet of adhesive cellulose acetate or of some other material.

The radioactivity of the sample must be high enough to allow measurements over a period corresponding to 3 estimated half-lives but must be, for each measurement, within the linearity range of the equipment. Correction for dead-time losses is applied if necessary.

The same source is measured in the same geometrical conditions and at intervals usually corresponding to at least half of the estimated half-life. Each value is tabulated against the time interval from the initial measurement. To avoid influence of decay during measurement, the counting time is the same for all measurements.

A graph can be drawn with time as the abscissa and the logarithm of the relative instrument reading (e.g. count rate) as the ordinate. The half-life is calculated from the slope of the best linear fit of the measured values against the time corresponding to each measurement.

Approximate half-life. For this purpose, not fewer than 3 measurements are made over a period of not less than 1/4 of the estimated half-life.

The sample to be examined and the instrument to be used comply with the indications given above. The data are processed in the same way as above.

SPECTROMETRY

Radionuclides can be identified by their emission spectrum. Each type of emission (i.e. alpha particles, beta particles and electrons, gamma- and X-rays) requires specific equipment to acquire an emission spectrum. Spectrometers must be calibrated in order to work properly and the following sections describe the different equipment and detail the general procedures for a reliable measurement.

GAMMA-RAY SPECTROMETRY

General principles. In gamma-ray spectrometry using a scintillation detector, absorption of gamma- and X-rays results in production of light, which is converted into an electrical pulse by a photomultiplier. In gamma-ray spectrometry using a semiconductor detector, absorption of gamma- and X-rays results in the immediate production of an electrical pulse.

In both cases the pulse amplitude is proportional to the energy of the absorbed radiation. The most common detectors for gamma- and X-ray spectrometry are thallium-activated sodium iodide (NaI(Tl)) scintillation counters and high-purity germanium (HPGe) semiconductor detectors.

A gamma-ray spectrum can be produced by collecting and analysing a sufficient number of pulses.

Apparatus. A gamma-ray spectrometer usually comprises a shielded measuring chamber where the sample is positioned, a detector, an electronic chain and a multichannel analyser.

The shielding of the chamber must be able to reduce the background signal to a level that allows the registration of a correct gamma-ray spectrum.

The measurement chamber has a movable cover or a drawer to allow the positioning of the sample. A sample holder may be present to ensure reproducible geometry between measurements.

The duration of measurement is related to the radioactivity of the target radionuclide and a long period of acquisition may be required to achieve the necessary counting statistics. Dead-time losses must be carefully considered with this type of detector.

The sensitivity of a NaI(Tl) detector is higher than that of a germanium detector of the same size. In general, peaks in an energy spectrum are identified with an uncertainty depending upon the full width of the peak at its half-maximum height (FWHM). The energy resolution of a solid-state scintillation detector is much poorer than that of a semiconductor detector and hence peaks obtained with a semiconductor detector are much narrower than those obtained with a scintillation detector. Figure 2.2.66.-2 shows a comparison of the spectra obtained from the same source with the 2 types of detector.

The different performances of NaI(Tl) and HPGe detectors may limit their use in some spectrometric analyses.

For the identification of the radionuclide(s) in a preparation and determination of radionuclidic purity, a risk assessment on the process of radionuclide production must assess the potential presence of other radionuclides with photon energies in the same range (± 10 per cent) as that of the radionuclide(s) present in the radiopharmaceutical.

In case radionuclidic impurities can be present that emit gamma- or X-rays with an energy in the same range as that of the photons emitted by the radionuclide in the preparation, a measured peak energy within a maximum interval of ± 2 keV or ± 2 per cent (whichever is the larger) with respect to the nominal peak energy (see *5.7. Table of physical characteristics of radionuclides)* is sufficient for peak identification.

In the case where such impurities are not expected to be present, a maximum interval of ± 10 keV or ± 6 per cent (whichever is the larger) with respect to the nominal peak energy is acceptable for peak identification.

Method. Ensure that the counting rate of the sample falls within the linearity range of the equipment. For liquid samples this may be achieved by appropriate dilution; for solid samples, by increasing the source-to-detector distance or by using an attenuating material. Introduce the preparation to be examined in a container into the instrument chamber and record the spectrum after closing the shielding.

Ensure that the container used for quantitative measurements is of the same shape, dimensions, volume and material as that of the calibration standard.

Ensure that the composition of the solution and the position of the container in the measuring chamber is the same for the container for the quantitative measurement as for the calibration standard.

Radionuclide identification. Calibrate the spectrometer in relation to energy. Determination of the correspondence of the energy of the peaks detected from the sample to the energies prescribed by a monograph is a valid identification test.

Radionuclidic purity. Calibrate the spectrometer in relation to efficiency and energy. Determine the LOQ and resolution of the equipment and ensure that they are in line with the limits of the radionuclides to be determined. Record the spectrum of the preparation.

Identify the radionuclides present in the preparation to be examined and determine their radioactivity with the aid of chapter *5.7. Table of physical characteristics of radionuclides*. Because the level of radionuclidic impurities, expressed as a percentage of the total radioactivity, may increase or decrease with time, the measured activity of each impurity must be recalculated to the activity during the period of validity of the preparation. The activities of all radionuclidic impurities need to be summed (taking into account the limit of quantification) and related to the total radioactivity of the preparation.

The sample is placed close to the detector or within a well-type detector. All the events within a pre-set energy range are collected and displayed on a ratemeter as counts per second or accumulated over a pre-set period of time. If there is sufficient difference in photon energies emitted by the radionuclide(s), a sodium iodide detector can be suitable, given its high sensitivity. However, if there is a need to discriminate emissions of similar energy, a HPGe detector or another semiconductor detector is needed.

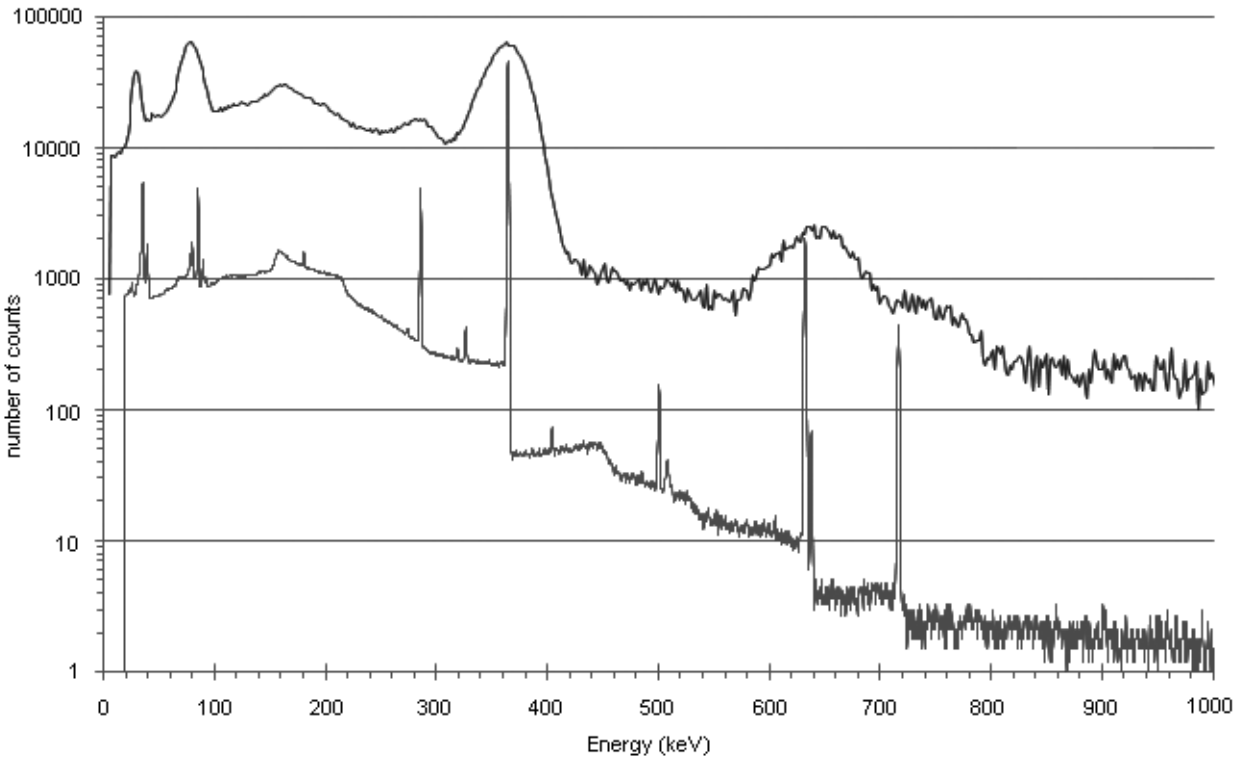

Figure 2.2.66.-2. – *Comparative pulse-height spectra recorded using a thallium-activated sodium iodide scintillator (upper curve) and a high-purity germanium semiconductor detector (lower curve). The source was gamma- and X-ray radiation from the decay of iodine-131.*

Calibration. Calibration in relation to energy is done by using the peaks of known sources traceable to national or international standards, such as cobalt-57, caesium-137, cobalt-60 and others covering the desired energy range. A calibration in relation to efficiency can be simultaneously obtained, so that not only the energy spectrum but also the activity of the sample and the radionuclide impurities can be further determined. The calibration of efficiency can be performed with a traceable radionuclide source with energy peaks covering the desired range or with the aid of a mixed, traceable radionuclide standard with gamma-ray energies covering the desired range.

To obtain the efficiency curve, the detector response as a function of the energy has to be measured using each separate sample/detector geometry. For this reason, it is possible to carry out the measurement with the aid of a primary standard source. Primary standards may not be available for radionuclides with a short half-life, e.g. some positron emitters. When measuring, the sample will mostly have to be in a container and set at a defined position in relation to the detector. The sample/detector geometry is then defined by the position of the sample relative to the detector and the characteristics of the container and sample, e.g. shape, volume and density. Figure 2.2.66.-3 shows a typical HPGe detector efficiency curve obtained for a cylindrical container placed on top of the detector.

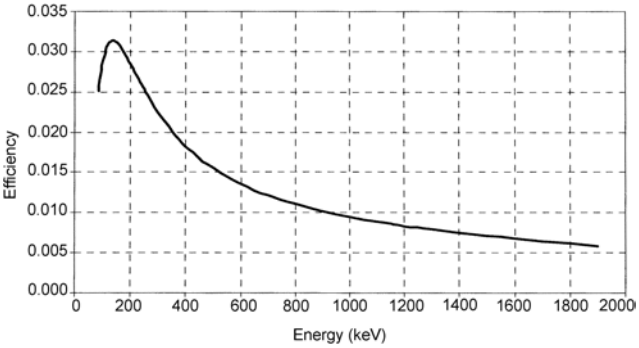

Figure 2.2.66.-3. – *Typical HPGe efficiency curve measured using a dedicated container set on top of the detector*

BETA-PARTICLE SPECTROMETRY

In the case of a beta-particle emitter, a beta-particle spectrometer is necessary to determine the energy distribution of the emitted beta particles. It is analogous to a gamma-ray spectrometer, but frequently uses liquid scintillators to convert the energy of the beta particles into detectable light, which can then be analysed. Beta-particle spectrometry is mostly achieved by dissolving or suspending the sample in a liquid scintillation cocktail in transparent or translucent (glass or plastic) containers and subsequent counting of the electrical pulses generated by a photomultiplier from the emitted light. The pulse amplitude is related to the energy of the absorbed radiation. A beta-particle spectrum can be produced by collecting a sufficient number of pulses. The liquid scintillation cocktail is chosen in such a way that counting errors due to quenching, chemoluminescence, phosphorescence, etc., are minimised. Coincidence counting with 2 or more photomultipliers is also used to minimise counts from background radiation, electronics, etc.
To differentiate between alpha- and beta-particle emissions, pulse-shape discrimination is commonly used.

Radionuclide identification. Determination of the correspondence of the mean and/or maximum energies in the energy spectrum from the sample to the energies prescribed by a monograph is a valid identification test.

Calibration. A common method of energy calibration is to use an unquenched reference sample to determine the maximum energy of the beta particles emitted by the radionuclide of interest.

ALPHA-PARTICLE SPECTROMETRY

For the identification and assay of alpha-particle emitters, spectrometry using liquid scintillation is mostly used. The principle is explained in the previous section on beta-particle spectrometry.
For the identification and determination of radionuclidic purity of alpha-particle emitters, spectrometry using a silicon-diode semiconductor detector can be used. Using this detector, the absorption of alpha particles results in the immediate production of an electrical pulse. The movement of electron-hole pairs created by the interaction of radiation induces an electrical charge, which is amplified and measured.

The sample preparation is of crucial importance. After a chemical separation of the radionuclide of interest, the sample is electro-deposited on a stainless steel disk in the form of a very thin layer of material to minimise self-absorption. The yield of the whole procedure can be determined experimentally by adding a known amount of a tracer, which will take into account the chemical separation efficiency, the electro-deposition efficiency and the counting efficiency.

For both types of detectors, the pulse amplitude is related to the energy of the absorbed radiation. An alpha-particle spectrum can be produced by collecting a sufficient number of pulses.

Radionuclide identification. Determination of the correspondence of the energy of the peaks detected from the sample to the energies prescribed by a monograph is a valid identification test.

Calibration. An alpha-particle spectrometer has to be calibrated in relation to energy and efficiency. This is done by using the peaks from known sources covering the desired energy range, such as americium-241 and plutonium-242. Not all alpha particles emitted by the source will produce a count in the system. The probability that an emitted alpha particle will interact with the detector material and produce a count is the efficiency of the detector, which depends on the geometry.

DETECTION AND MEASUREMENT OF RADIOACTIVITY IN COMBINATION WITH A SEPARATION TECHNIQUE

A radioactive preparation may contain the radionuclide in different chemical forms other than the intended one. Therefore it is necessary to separate the different substances containing the radionuclide and determine the percentage of radioactivity due to the radionuclide concerned associated with the stated chemical form and the contribution to the total radioactivity due to the radionuclide concerned coming from other substances. For this purpose, instruments for the detection and measurement of radioactivity are used in combination with a physico-chemical separation technique. In principle, any method of separation may be used.

Monographs for radiopharmaceutical preparations may include the combined use of radioactivity measurement with paper chromatography (*2.2.26*), thin-layer chromatography (*2.2.27*), gas chromatography (*2.2.28*), liquid chromatography (*2.2.29*), size-exclusion chromatography (*2.2.30*) or electrophoresis (*2.2.31*).

In all cases the radioactivity of each analyte is measured after the separation has been achieved using the stated method.

Radioactivity measurement may be performed using detectors mounted in series with other detectors in analytical instruments, such as liquid chromatographs, making in-line detection of analytes, or performed off-line, i.e. after the analytical separation has been completed, by measuring the radioactivity of eluate fractions obtained after liquid chromatographic separation of equal volume or as the distribution of radioactivity on paper chromatography or thin-layer chromatography supports.

IN-LINE DETECTION AND MEASUREMENT OF RADIOACTIVITY IN COMBINATION WITH LIQUID CHROMATOGRAPHY

Apparatus. Liquid chromatography (see *2.2.29*) may be used to separate the principal radioactive substance of a radiopharmaceutical preparation from radiochemical impurities or degradation products. In-line detection is usually obtained by using a scintillation detector connected to a ratemeter and recording device. The scintillating material of the detector is selected on the basis of the emission to be detected, e.g. plastic scintillator for beta-particle emissions or scintillation crystals for gamma- and X-ray radiations. The addition of a liquid scintillation cocktail before the eluate reaches the in-line radioactivity detector may also be used in the case of beta-particle-emitting radionuclides.

The simultaneous use of a radioactivity detector and other detectors (UV, refractive index, conductimetric, etc.) connected in series may be used to identify the substance, e.g. in relation to the retention time of a known standard, to determine the amount of the substance using a suitable reference standard and to measure the radioactivity associated with such a substance. When different detectors are coupled in series, correct the experimentally obtained retention times for the delay in time between the detectors.

In liquid chromatography some radiochemical impurities, such as colloidal impurities, may be retained on the column. In such cases a separate method is required for the determination of the content of the retained radiochemical impurities and the calculation formula for the expression of the total radiochemical purity takes into account the relative amount of the retained radiochemical impurities.

One possibility to evaluate such retention problems during method validation is to evaluate the radioactivity recovery from the column by measuring the total radioactivity recovered from the chromatographic equipment with and without the column.

Method. The sample is diluted if necessary and then applied to the column in the prescribed volume and conditions. In this respect it is important to demonstrate the LOD and LOQ, and the linearity of the detector throughout the range of activities to be measured.

Flow-through detector. A portion of the tubing where the eluate containing the radioactive species is flowing is placed in front of or within the detector. Counting efficiency may be increased using a longer portion of the tube (e.g. making multiple turns in front of or within the detector); however, this will reduce the ability of the system to separate 2 closely eluting peaks of radioactivity.

When the radiochemical purity test prescribes determination of the total radiochemical impurities or there is a quantitative determination of an individual impurity, it is important to choose an appropriate threshold setting and appropriate conditions for integration of the peak areas. In such tests the disregard limit, i.e. the limit at or below which a peak is disregarded, is dependent on the method and is related to the limit of detection and limit of quantification. Thus, the threshold setting of the data collection system corresponds to at least half of the disregard limit.

Record the signal of the detectors as a function of time.

Identification of peaks in the radiometric signal (radiochromatogram) is made on the basis of the retention time of the analytes. The profile from other detectors may be used for this purpose.

Quantification of the different components of chromatogram and radiochromatogram profiles is made on the basis of peak areas. Peak areas are usually obtained by direct integration of the detector signal using commercially available software.

OFF-LINE DETECTION AND MEASUREMENT OF RADIOACTIVITY

Liquid chromatography (*2.2.29*). Provided the retention times of the various radiochemical species are reproducibly consistent, an alternative method of radioactivity quantification is to collect the liquid chromatography effluent in a series of timed samples (fractions) for off-line analysis for radioactivity content. The radioactivity in the fractions corresponding to the peaks can be expressed as a percentage of the total of the radioactivity in all fractions, taking into account the limit of quantification.

Method. The sample is applied on the column in the prescribed volume and conditions. Fractions are collected at the end of the chromatographic line.

The volume between the detector used to identify the retention time of the peaks and the collection point is measured and a delay factor is calculated on the basis of the effluent flow rate and applied to each peak to estimate the time of elution of the peak at the point of collection. The fractions are collected on the basis of a fixed time interval or at the time of appearance estimated from the delay time so that any relevant peak is collected in one or more fractions.

The radioactivity of each fraction is counted using a calibrated instrument such as a dose calibrator or a scintillation detector, taking into account the limit of quantification and the linearity.

An elution profile is obtained tabulating the counts per fraction against the elution time or volume. The activity of fractions belonging to the same peak may be summed and the relative percentage calculated to define radiochemical purity.

Thin-layer chromatography (*2.2.27*) and paper chromatography (*2.2.26*). Provided a thin-layer chromatography or a paper chromatography analytical method has been validated for the separation of components of a radioactive preparation, the number and relative intensities of the separated spots can be detected and measured using a radioactivity detector that can relate the radioactivity to a specific position on the chromatographic support.

The positions of the spots (peaks) may permit chemical identification by comparison with solutions of the same chemical substances (non-radioactive), using a suitable detection method.

Apparatus.

Scanning device. The apparatus generally comprises a radioactivity detector, such as a position-sensitive proportional counter or a collimated scintillation detector placed at a fixed distance from a scanning platform where the chromatographic support to be scanned is positioned.

The radioactivity of the sample applied to the chromatography support must result in a counting rate in the linearity range of the equipment and the sample may be diluted if necessary. The area to be scanned is positioned at the reference position so that the desired lane is aligned with the detector scanning trip. Adjust the scanning time to allow enough counting time during the run.

The detector or the platform may be moved in-plane, along the *x*-axis or the *y*-axis, so that the entire surface can be scanned during a single run.

The detector is connected to a suitable counting device, so that the radioactivity revealed can be measured quantitatively and the count rate related spatially to the surface scanned.

The radioactivity is automatically reported against the development distance and the profile describes peaks having an area proportional to the number of counts per unit of distance.

Radioactivity counter. In the case where a maximum of only 3 radiochemical components needs to be identified and they are fully separated, the support can be cut into equal strips, each having a size not more than half the length of the support corresponding to the difference between the retardation factors of the 2 closest spots. Each single strip

is numbered starting from the origin side and counted separately. Alternatively, for well-characterised systems the support may be cut into 2 or more unequal portions, folded if necessary to approximately equal geometry before counting. An ionisation chamber or a scintillation counter can be used for this purpose, provided they are used within the instrument's linearity range and above its LOQ.

Autoradiography. This may also be used to acquire an image of the radioactivity distribution on the chromatographic support. In this case, the response of the system used for the acquisition of the image, such as a phosphor imager or a photographic film, must be shown to be linear with respect to the radioactivity in the chromatogram. Otherwise the system must be pre-calibrated or exposed at the same time to a series of reference radioactive sources, obtained by dilution from a calibrated standard solution, covering the expected radioactivity range that may be present on the support.

Method. Deposit the required amount of sample at the origin of the chromatographic support, with drying if necessary to avoid spreading of the spot. Develop the chromatogram according to the prescribed method. A carrier may be added when prescribed in a particular monograph.

In paper and thin-layer chromatography, it is preferable not to dilute the preparation to be examined but it is important to avoid depositing such a quantity of radioactivity that counting losses by coincidence (dead-time losses) occur during measurement of the radioactivity.

After development, the support is dried and the positions of the radioactive areas are detected by measurement of radioactivity over the length of the chromatogram, using a suitable collimated counter, by autoradiography, or by cutting the strips into portions and counting each portion.

Radioactivity may be measured by integration using an automatic-plotting instrument or a digital counter.

The ratios of the areas under the peaks give the ratios of the percentages of radioactivity due to the respective radiochemical substances.

When the strips are cut into portions, the ratios of the quantities of radioactivity measured give the ratio of percentages of radioactivity due to the respective radiochemical species.

Calibration. It is important to demonstrate the limits of detection and quantification, and the linearity of the detector throughout the range of activities to be measured and in all positions on the support of the chromatographic system. This may be done by applying samples covering a range of activities from 0.1 per cent to 100 per cent of the expected range. Prepare the samples by dilution and apply equal volumes of each, with drying if necessary. After examining the radioactivity profile using the equipment's standard settings, the peak areas are integrated for comparison with the calculated amount of radioactivity applied to each spot. Verify that the response of the detector over the complete length and width of the detector path is the same, as the response may vary with the detector position.

The peak-resolving power is influenced by the size of the spot, the total radioactivity of the radionuclide and the detector equipment. It can be checked by applying 5 µL spots separated by distances increasing from 4 mm to 20 mm in 2 mm increments. The approximate resolution of the detection system can be determined from the radioactivity profile as the distance between the 2 spots where the baseline is only just clearly separated.

2.3. IDENTIFICATION

01/2008:20301

2.3.1. IDENTIFICATION REACTIONS OF IONS AND FUNCTIONAL GROUPS

ACETATES

a) Heat the substance to be examined with an equal quantity of *oxalic acid R*. Acid vapours with the characteristic odour of acetic acid are liberated, showing an acid reaction (*2.2.4*).

b) Dissolve about 30 mg of the substance to be examined in 3 mL of *water R* or use 3 mL of the prescribed solution. Add successively 0.25 mL of *lanthanum nitrate solution R*, 0.1 mL of *0.05 M iodine* and 0.05 mL of *dilute ammonia R2*. Heat carefully to boiling. Within a few minutes a blue precipitate is formed or a dark blue colour develops.

ACETYL

In a test-tube about 180 mm long and 18 mm in external diameter, place about 15 mg of the substance to be examined, or the prescribed quantity, and 0.15 mL of *phosphoric acid R*. Close the tube with a stopper through which passes a small test-tube about 100 mm long and 10 mm in external diameter containing *water R* to act as a condenser. On the outside of the smaller tube, hang a drop of *lanthanum nitrate solution R*. Except for substances hydrolysable only with difficulty, place the apparatus in a water-bath for 5 min, then take out the smaller tube. Remove the drop and mix it with 0.05 mL of *0.01 M iodine* on a tile. Add at the edge 0.05 mL of *dilute ammonia R2*. After 1 min to 2 min, a blue colour develops at the junction of the two drops; the colour intensifies and persists for a short time.

For *substances hydrolysable only with difficulty* heat the mixture slowly to boiling over an open flame and then proceed as prescribed above.

ALKALOIDS

Dissolve a few milligrams of the substance to be examined, or the prescribed quantity, in 5 mL of *water R*, add *dilute hydrochloric acid R* until an acid reaction occurs (*2.2.4*), then 1 mL of *potassium iodobismuthate solution R*. An orange or orange-red precipitate is formed immediately.

ALUMINIUM

Dissolve about 15 mg of the substance to be examined in 2 mL of *water R* or use 2 mL of the prescribed solution. Add about 0.5 mL of *dilute hydrochloric acid R* and about 0.5 mL of *thioacetamide reagent R*. No precipitate is formed. Add dropwise *dilute sodium hydroxide solution R*. A gelatinous white precipitate is formed which dissolves on further addition of *dilute sodium hydroxide solution R*. Gradually add *ammonium chloride solution R*. The gelatinous white precipitate is re-formed.

AMINES, PRIMARY AROMATIC

Acidify the prescribed solution with *dilute hydrochloric acid R* and add 0.2 mL of *sodium nitrite solution R*. After 1 min to 2 min, add 1 mL of *β-naphthol solution R*. An intense orange or red colour and usually a precipitate of the same colour are produced.

AMMONIUM SALTS

To the prescribed solution add 0.2 g of *magnesium oxide R*. Pass a current of air through the mixture and direct the gas that escapes just beneath the surface of a mixture of 1 mL of *0.1 M hydrochloric acid* and 0.05 mL of *methyl red solution R*. The colour of the indicator changes to yellow. On addition of 1 mL of a freshly prepared 100 g/L solution of *sodium cobaltinitrite R* a yellow precipitate is formed.

AMMONIUM SALTS AND SALTS OF VOLATILE BASES

Dissolve about 20 mg of the substance to be examined in 2 mL of *water R* or use 2 mL of the prescribed solution. Add 2 mL of *dilute sodium hydroxide solution R*. On heating, the solution gives off vapour that can be identified by its odour and by its alkaline reaction (*2.2.4*).

ANTIMONY

Dissolve with gentle heating about 10 mg of the substance to be examined in a solution of 0.5 g of *sodium potassium tartrate R* in 10 mL of *water R* and allow to cool: to 2 mL of this solution, or to 2 mL of the prescribed solution, add *sodium sulfide solution R* dropwise; an orange-red precipitate is formed which dissolves on addition of *dilute sodium hydroxide solution R*.

ARSENIC

Heat 5 mL of the prescribed solution on a water-bath with an equal volume of *hypophosphorous reagent R*. A brown precipitate is formed.

BARBITURATES, NON-NITROGEN SUBSTITUTED

Dissolve about 5 mg of the substance to be examined in 3 mL of *methanol R*, add 0.1 mL of a solution containing 100 g/L of *cobalt nitrate R* and 100 g/L of *calcium chloride R*. Mix and add, with shaking, 0.1 mL of *dilute sodium hydroxide solution R*. A violet-blue colour and precipitate are formed.

BENZOATES

a) To 1 mL of the prescribed solution add 0.5 mL of *ferric chloride solution R1*. A dull-yellow precipitate, soluble in *ether R*, is formed.

b) Place 0.2 g of the substance to be examined, treated if necessary as prescribed, in a test-tube. Moisten with 0.2 mL to 0.3 mL of *sulfuric acid R*. Gently warm the bottom of the tube. A white sublimate is deposited on the inner wall of the tube.

c) Dissolve 0.5 g of the substance to be examined in 10 mL of *water R* or use 10 mL of the prescribed solution. Add 0.5 mL of *hydrochloric acid R*. The precipitate obtained, after crystallisation from warm *water R* and drying *in vacuo*, has a melting point (*2.2.14*) of 120 °C to 124 °C.

BISMUTH

a) To 0.5 g of the substance to be examined add 10 mL of *dilute hydrochloric acid R* or use 10 mL of the prescribed solution. Heat to boiling for 1 min. Cool and filter if necessary. To 1 mL of the solution obtained add 20 mL of *water R*. A white or slightly yellow precipitate is formed which on addition of 0.05 mL to 0.1 mL of *sodium sulfide solution R* turns brown.

b) To about 45 mg of the substance to be examined add 10 mL of *dilute nitric acid R* or use 10 mL of the prescribed solution. Boil for 1 min. Allow to cool and filter if necessary. To 5 mL of the solution obtained add 2 mL of a 100 g/L solution of *thiourea R*. A yellowish-orange colour or an orange precipitate is formed. Add 4 mL of a 25 g/L solution of *sodium fluoride R*. The solution is not decolorised within 30 min.

BROMIDES

a) Dissolve in 2 mL of *water R* a quantity of the substance to be examined equivalent to about 3 mg of bromide (Br^-) or use 2 mL of the prescribed solution. Acidify with *dilute nitric acid R* and add 0.4 mL of *silver nitrate solution R1*. Shake and allow to stand. A curdled, pale yellow precipitate is formed. Centrifuge and wash the precipitate with three quantities, each of 1 mL, of *water R*. Carry out this operation rapidly in subdued light disregarding the fact that the supernatant solution may not become perfectly clear. Suspend the precipitate obtained in 2 mL of *water R* and add 1.5 mL of *ammonia R*. The precipitate dissolves with difficulty.

b) Introduce into a small test-tube a quantity of the substance to be examined equivalent to about 5 mg of bromide (Br^-) or the prescribed quantity. Add 0.25 mL of *water R*, about 75 mg

of *lead dioxide R*, 0.25 mL of *acetic acid R* and shake gently. Dry the inside of the upper part of the test-tube with a piece of filter paper and allow to stand for 5 min. Prepare a strip of suitable filter paper of appropriate size. Impregnate it by capillarity, by dipping the tip in a drop of *decolorised fuchsin solution R* and introduce the impregnated part immediately into the tube. Starting from the tip, a violet colour appears within 10 s that is clearly distinguishable from the red colour of fuchsin, which may be visible on a small area at the top of the impregnated part of the paper strip.

CALCIUM

a) To 0.2 mL of a neutral solution containing a quantity of the substance to be examined equivalent to about 0.2 mg of calcium (Ca^{2+}) per millilitre or to 0.2 mL of the prescribed solution add 0.5 mL of a 2 g/L solution of *glyoxalhydroxyanil R* in *ethanol (96 per cent) R*, 0.2 mL of *dilute sodium hydroxide solution R* and 0.2 mL of *sodium carbonate solution R*. Shake with 1 mL to 2 mL of *chloroform R* and add 1 mL to 2 mL of *water R*. The chloroform layer is coloured red.

b) Dissolve about 20 mg of the substance to be examined or the prescribed quantity in 5 mL of *acetic acid R*. Add 0.5 mL of *potassium ferrocyanide solution R*. The solution remains clear. Add about 50 mg of *ammonium chloride R*. A white, crystalline precipitate is formed.

CARBONATES AND BICARBONATES

Introduce into a test-tube 0.1 g of the substance to be examined and suspend in 2 mL of *water R* or use 2 mL of the prescribed solution. Add 3 mL of *dilute acetic acid R*. Close the tube immediately using a stopper fitted with a glass tube bent twice at right angles. The solution or the suspension becomes effervescent and gives off a colourless and odourless gas. Heat gently and collect the gas in 5 mL of *barium hydroxide solution R*. A white precipitate is formed that dissolves on addition of an excess of *hydrochloric acid R1*.

CHLORIDES

a) Dissolve in 2 mL of *water R* a quantity of the substance to be examined equivalent to about 2 mg of chloride (Cl^-) or use 2 mL of the prescribed solution. Acidify with *dilute nitric acid R* and add 0.4 mL of *silver nitrate solution R1*. Shake and allow to stand. A curdled, white precipitate is formed. Centrifuge and wash the precipitate with three quantities, each of 1 mL, of *water R*. Carry out this operation rapidly in subdued light, disregarding the fact that the supernatant solution may not become perfectly clear. Suspend the precipitate in 2 mL of *water R* and add 1.5 mL of *ammonia R*. The precipitate dissolves easily with the possible exception of a few large particles which dissolve slowly.

b) Introduce into a test-tube a quantity of the substance to be examined equivalent to about 15 mg of chloride (Cl^-) or the prescribed quantity. Add 0.2 g of *potassium dichromate R* and 1 mL of *sulfuric acid R*. Place a filter-paper strip impregnated with 0.1 mL of *diphenylcarbazide solution R* over the opening of the test-tube. The paper turns violet-red. The impregnated paper must not come into contact with the potassium dichromate.

CITRATES

Dissolve in 5 mL of *water R* a quantity of the substance to be examined equivalent to about 50 mg of citric acid or use 5 mL of the prescribed solution. Add 0.5 mL of *sulfuric acid R* and 1 mL of *potassium permanganate solution R*. Warm until the colour of the permanganate is discharged. Add 0.5 mL of a 100 g/L solution of *sodium nitroprusside R* in *dilute sulfuric acid R* and 4 g of *sulfamic acid R*. Make alkaline with *concentrated ammonia R*, added dropwise until all the sulfamic acid has dissolved. Addition of an excess of *concentrated ammonia R* produces a violet colour, turning to violet-blue.

ESTERS

To about 30 mg of the substance to be examined or the prescribed quantity add 0.5 mL of a 70 g/L solution of *hydroxylamine hydrochloride R* in *methanol R* and 0.5 mL of a 100 g/L solution of *potassium hydroxide R* in *ethanol (96 per cent) R*. Heat to boiling, cool, acidify with *dilute hydrochloric acid R* and add 0.2 mL of *ferric chloride solution R1* diluted ten times. A bluish-red or red colour is produced.

IODIDES

a) Dissolve a quantity of the substance to be examined equivalent to about 4 mg of iodide (I^-) in 2 mL of *water R* or use 2 mL of the prescribed solution. Acidify with *dilute nitric acid R* and add 0.4 mL of *silver nitrate solution R1*. Shake and allow to stand. A curdled, pale-yellow precipitate is formed. Centrifuge and wash with three quantities, each of 1 mL, of *water R*. Carry out this operation rapidly in subdued light disregarding the fact that the supernatant solution may not become perfectly clear. Suspend the precipitate in 2 mL of *water R* and add 1.5 mL of *ammonia R*. The precipitate does not dissolve.

b) To 0.2 mL of a solution of the substance to be examined containing about 5 mg of iodide (I^-) per millilitre, or to 0.2 mL of the prescribed solution, add 0.5 mL of *dilute sulfuric acid R*, 0.1 mL of *potassium dichromate solution R*, 2 mL of *water R* and 2 mL of *chloroform R*. Shake for a few seconds and allow to stand. The chloroform layer is coloured violet or violet-red.

IRON

a) Dissolve a quantity of the substance to be examined equivalent to about 10 mg of iron (Fe^{2+}) in 1 mL of *water R* or use 1 mL of the prescribed solution. Add 1 mL of *potassium ferricyanide solution R*. A blue precipitate is formed that does not dissolve on addition of 5 mL of *dilute hydrochloric acid R*.

b) Dissolve a quantity of the substance to be examined equivalent to about 1 mg of iron (Fe^{3+}) in 30 mL of *water R*. To 3 mL of this solution or to 3 mL of the prescribed solution, add 1 mL of *dilute hydrochloric acid R* and 1 mL of *potassium thiocyanate solution R*. The solution is coloured red. Take two portions, each of 1 mL, of the mixture. To one portion add 5 mL of *isoamyl alcohol R* or 5 mL of *ether R*. Shake and allow to stand. The organic layer is coloured pink. To the other portion add 2 mL of *mercuric chloride solution R*. The red colour disappears.

c) Dissolve a quantity of the substance to be examined equivalent to not less than 1 mg of iron (Fe^{3+}) in 1 mL of *water R* or use 1 mL of the prescribed solution. Add 1 mL of *potassium ferrocyanide solution R*. A blue precipitate is formed that does not dissolve on addition of 5 mL of *dilute hydrochloric acid R*.

LACTATES

Dissolve a quantity of the substance to be examined equivalent to about 5 mg of lactic acid in 5 mL of *water R* or use 5 mL of the prescribed solution. Add 1 mL of *bromine water R* and 0.5 mL of *dilute sulfuric acid R*. Heat on a water-bath until the colour is discharged, stirring occasionally with a glass rod. Add 4 g of *ammonium sulfate R* and mix. Add dropwise and without mixing 0.2 mL of a 100 g/L solution of *sodium nitroprusside R* in *dilute sulfuric acid R*. Still without mixing add 1 mL of *concentrated ammonia R*. Allow to stand for 30 min. A dark green ring appears at the junction of the two liquids.

LEAD

a) Dissolve 0.1 g of the substance to be examined in 1 mL of *acetic acid R* or use 1 mL of the prescribed solution. Add 2 mL of *potassium chromate solution R*. A yellow precipitate is formed that dissolves on addition of 2 mL of *strong sodium hydroxide solution R*.

b) Dissolve 50 mg of the substance to be examined in 1 mL of *acetic acid R* or use 1 mL of the prescribed solution. Add 10 mL of *water R* and 0.2 mL of *potassium iodide solution R*. A yellow precipitate is formed. Heat to boiling for 1 min to 2 min. The precipitate dissolves. Allow to cool. The precipitate is re-formed as glistening, yellow plates.

MAGNESIUM

Dissolve about 15 mg of the substance to be examined in 2 mL of *water R* or use 2 mL of the prescribed solution. Add 1 mL of *dilute ammonia R1*. A white precipitate is formed that dissolves on addition of 1 mL of *ammonium chloride solution R*. Add 1 mL of *disodium hydrogen phosphate solution R*. A white crystalline precipitate is formed.

MERCURY

a) Place about 0.1 mL of a solution of the substance to be examined on well-scraped copper foil. A dark-grey stain that becomes shiny on rubbing is formed. Dry the foil and heat in a test-tube. The spot disappears.

b) To the prescribed solution add *dilute sodium hydroxide solution R* until strongly alkaline (*2.2.4*). A dense yellow precipitate is formed (mercuric salts).

NITRATES

To a mixture of 0.1 mL of *nitrobenzene R* and 0.2 mL of *sulfuric acid R*, add a quantity of the powdered substance equivalent to about 1 mg of nitrate (NO_3^-) or the prescribed quantity. Allow to stand for 5 min. Cool in iced water and add slowly and with mixing 5 mL of *water R*, then 5 mL of *strong sodium hydroxide solution R*. Add 5 mL of *acetone R*. Shake and allow to stand. The upper layer is coloured deep violet.

PHOSPHATES (ORTHOPHOSPHATES)

a) To 5 mL of the prescribed solution, neutralised if necessary, add 5 mL of *silver nitrate solution R1*. A yellow precipitate is formed whose colour is not changed by boiling and which dissolves on addition of *ammonia R*.

b) Mix 1 mL of the prescribed solution with 2 mL of *molybdovanadic reagent R*. A yellow colour develops.

POTASSIUM

a) Dissolve 0.1 g of the substance to be examined in 2 mL of *water R* or use 2 mL of the prescribed solution. Add 1 mL of *sodium carbonate solution R* and heat. No precipitate is formed. Add to the hot solution 0.05 mL of *sodium sulfide solution R*. No precipitate is formed. Cool in iced water and add 2 mL of a 150 g/L solution of *tartaric acid R*. Allow to stand. A white crystalline precipitate is formed.

b) Dissolve about 40 mg of the substance to be examined in 1 mL of *water R* or use 1 mL of the prescribed solution. Add 1 mL of *dilute acetic acid R* and 1 mL of a freshly prepared 100 g/L solution of *sodium cobaltinitrite R*. A yellow or orange-yellow precipitate is formed immediately.

SALICYLATES

a) To 1 mL of the prescribed solution add 0.5 mL of *ferric chloride solution R1*. A violet colour is produced that persists after the addition of 0.1 mL of *acetic acid R*.

b) Dissolve 0.5 g of the substance to be examined in 10 mL of *water R* or use 10 mL of the prescribed solution. Add 0.5 mL of *hydrochloric acid R*. The precipitate obtained, after recrystallisation from hot *water R* and drying *in vacuo*, has a melting point (*2.2.14*) of 156 °C to 161 °C.

SILICATES

Mix the prescribed quantity of the substance to be examined in a lead or platinum crucible by means of a copper wire with about 10 mg of *sodium fluoride R* and a few drops of *sulfuric acid R* to give a thin slurry. Cover the crucible with a thin, transparent plate of plastic under which a drop of *water R* is suspended and warm gently. Within a short time a white ring is rapidly formed around the drop of water.

SILVER

Dissolve about 10 mg of the substance to be examined in 10 mL of *water R* or use 10 mL of the prescribed solution. Add 0.3 mL of *hydrochloric acid R1*. A curdled, white precipitate is formed that dissolves on addition of 3 mL of *dilute ammonia R1*.

SODIUM

a) Dissolve 0.1 g of the substance to be examined in 2 mL of *water R* or use 2 mL of the prescribed solution. Add 2 mL of a 150 g/L solution of *potassium carbonate R* and heat to boiling. No precipitate is formed. Add 4 mL of *potassium pyroantimonate solution R* and heat to boiling. Allow to cool in iced water and if necessary rub the inside of the test-tube with a glass rod. A dense white precipitate is formed.

b) Dissolve a quantity of the substance to be examined equivalent to about 2 mg of sodium (Na^+) in 0.5 mL of *water R* or use 0.5 mL of the prescribed solution. Add 1.5 mL of *methoxyphenylacetic reagent R* and cool in ice-water for 30 min. A voluminous, white, crystalline precipitate is formed. Place in water at 20 °C and stir for 5 min. The precipitate does not disappear. Add 1 mL of *dilute ammonia R1*. The precipitate dissolves completely. Add 1 mL of *ammonium carbonate solution R*. No precipitate is formed.

SULFATES

a) Dissolve about 45 mg of the substance to be examined in 5 mL of *water R* or use 5 mL of the prescribed solution. Add 1 mL of *dilute hydrochloric acid R* and 1 mL of *barium chloride solution R1*. A white precipitate is formed.

b) To the suspension obtained during reaction (a), add 0.1 mL of *0.05 M iodine*. The suspension remains yellow (distinction from sulfites and dithionites), but is decolorised by adding dropwise *stannous chloride solution R* (distinction from iodates). Boil the mixture. No coloured precipitate is formed (distinction from selenates and tungstates).

TARTRATES

a) Dissolve about 15 mg of the substance to be examined in 5 mL of *water R* or use 5 mL of the prescribed solution. Add 0.05 mL of a 10 g/L solution of *ferrous sulfate R* and 0.05 mL of *dilute hydrogen peroxide solution R*. A transient yellow colour is produced. After the colour has disappeared add *dilute sodium hydroxide solution R* dropwise. A violet or purple colour is produced.

b) To 0.1 mL of a solution of the substance to be examined containing the equivalent of about 15 mg of tartaric acid per millilitre or to 0.1 mL of the prescribed solution add 0.1 mL of a 100 g/L solution of *potassium bromide R*, 0.1 mL of a 20 g/L solution of *resorcinol R* and 3 mL of *sulfuric acid R*. Heat on a water-bath for 5 min to 10 min. A dark-blue colour develops. Allow to cool and pour the solution into *water R*. The colour changes to red.

XANTHINES

To a few milligrams of the substance to be examined or the prescribed quantity add 0.1 mL of *strong hydrogen peroxide solution R* and 0.3 mL of *dilute hydrochloric acid R*. Heat to dryness on a water-bath until a yellowish-red residue is obtained. Add 0.1 mL of *dilute ammonia R2*. The colour of the residue changes to violet-red.

ZINC

Dissolve 0.1 g of the substance to be examined in 5 mL of *water R* or use 5 mL of the prescribed solution. Add 0.2 mL of *strong sodium hydroxide solution R*. A white precipitate is formed. Add a further 2 mL of *strong sodium hydroxide solution R*. The precipitate dissolves. Add 10 mL of *ammonium chloride solution R*. The solution remains clear. Add 0.1 mL of *sodium sulfide solution R*. A flocculent white precipitate is formed.

01/2013:20302

2.3.2. IDENTIFICATION OF FATTY OILS BY THIN-LAYER CHROMATOGRAPHY

METHOD A

Thin-layer chromatography (*2.2.27*).

Test solution. Unless otherwise prescribed, dissolve about 20 mg (1 drop) of the fatty oil in 3 mL of *methylene chloride R*.

Reference solution. Dissolve about 20 mg (1 drop) of *maize oil R* in 3 mL of *methylene chloride R*.

Plate: a suitable octadecylsilyl silica gel for high performance thin-layer chromatography as the coating substance.

Mobile phase:

- *mobile phase A*: *ether R*;
- *mobile phase B*: *methylene chloride R*, *glacial acetic acid R*, *acetone R* (20:40:50 *V/V/V*).

Application: 1 µL.

Development: twice over a path of 0.5 cm with mobile phase A, then twice over a path of 8 cm with mobile phase B.

Drying: in air.

Detection: spray with a 100 g/L solution of *phosphomolybdic acid R* in *ethanol (96 per cent) R*. Heat the plate at 120 °C for about 3 min and examine in daylight.

The chromatogram obtained typically shows spots comparable to those in Figure 2.3.2.-1.

METHOD B

Thin-layer chromatography (*2.2.27*).

Test solution. Unless otherwise prescribed, dissolve about 20 mg (1 drop) of the fatty oil in 3 mL of *methylene chloride R*.

Reference solution. Dissolve about 20 mg (1 drop) of *maize oil R* in 3 mL of *methylene chloride R*.

Plate: a suitable octadecylsilyl silica gel for high performance thin-layer chromatography as the coating substance.

Mobile phase: *methylene chloride R*, *glacial acetic acid R*, *acetone R* (20:40:50 *V/V/V*).

Application: 1 µL as bands of 8 mm. A suitable automated apparatus may be used.

Development: over a path of 7 cm.

Drying: in air.

Detection: treat with a 100 g/L solution of *phosphomolybdic acid R* in *ethanol (96 per cent) R*. Heat the plate at 120 °C for 3 min and examine in daylight.

The chromatogram obtained typically shows zones comparable to those in Figure 2.3.2.-2.

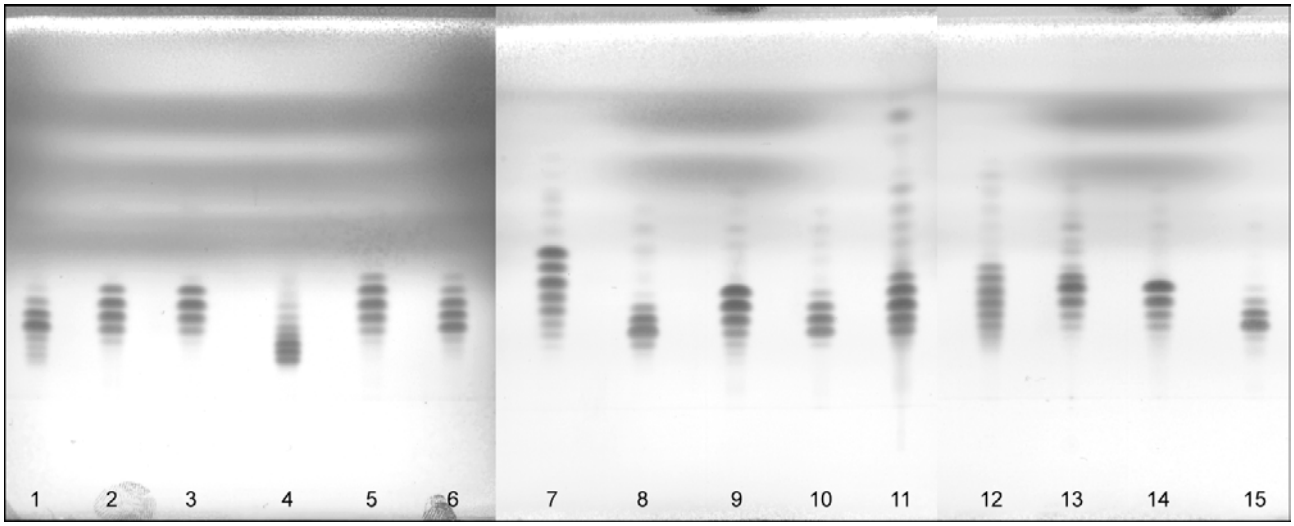

1. arachis oil	4. rapeseed oil	7. linseed oil	10. almond oil	13. evening primrose oil
2. sesame oil	5. soya-bean oil	8. olive oil	11. wheat-germ oil	14. safflower oil (type I)
3. maize oil	6. rapeseed oil (erucic acid-free)	9. sunflower oil	12. borage oil	15. safflower oil (type II)

Figure 2.3.2.-1. – *Chromatograms for the identification of fatty oils (method A)*

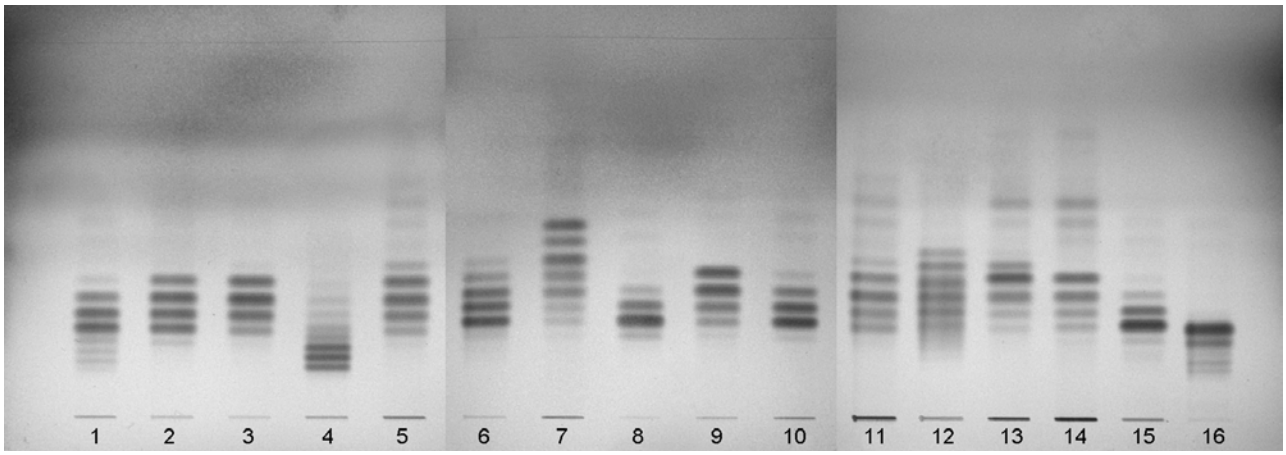

1. arachis oil	5. soya-bean oil	9. sunflower oil	13. evening primrose oil
2. sesame oil	6. rapeseed oil (erucic acid-free)	10. almond oil	14. safflower oil (type I)
3. maize oil	7. linseed oil	11. wheat-germ oil	15. safflower oil (type II)
4. rapeseed oil	8. olive oil	12. borage oil	16. hydrogenated arachis oil

Figure 2.3.2.-2. – *Chromatograms for the identification of fatty oils (method B)*

01/2008:20303

2.3.3. IDENTIFICATION OF PHENOTHIAZINES BY THIN-LAYER CHROMATOGRAPHY

Examine by thin-layer chromatography (*2.2.27*) using *kieselguhr G R* as the coating substance. Impregnate the plate by placing it in a closed tank containing the necessary quantity of the impregnation mixture composed of a solution containing 10 per cent *V/V* of *phenoxyethanol R* and 50 g/L of *macrogol 300 R* in *acetone R* so that the plate dips about 5 mm beneath the surface of the liquid. When the impregnation mixture has risen at least 17 cm from the lower edge of the plate, remove the plate and use immediately for chromatography. Carry out the chromatography in the same direction as the impregnation.

Test solution. Dissolve 20 mg of the substance to be examined in *chloroform R* and dilute to 10 mL with the same solvent.

Reference solution. Dissolve 20 mg of the corresponding chemical reference substance (CRS) in *chloroform R* and dilute to 10 mL with the same solvent.

Apply separately to the plate 2 µL of each solution and develop in the dark over a path of 15 cm using a mixture of 50 mL of *light petroleum R* and 1 mL of *diethylamine R* saturated with *phenoxyethanol R* (i.e. add about 3 mL to 4 mL of *phenoxyethanol R* to the above mixture of solvents to give a persistent cloudiness on shaking, decant, and use the supernatant, even if it is cloudy). After development place the plate under ultraviolet light at 365 nm and examine after a few minutes. The spot in the chromatogram obtained with the test solution is similar in position, fluorescence and size to the spot in the chromatogram obtained with the reference solution. Spray with a 10 per cent *V/V* solution of *sulfuric acid R* in *alcohol R*. The spot in the chromatogram obtained with the test solution is of the same colour as that in the chromatogram obtained with the reference solution and has similar stability over a period of at least 20 min.

01/2008:20304

2.3.4. ODOUR

On a watch-glass 6 cm to 8 cm in diameter, spread in a thin layer 0.5 g to 2.0 g of the substance to be examined. After 15 min, determine the odour or verify the absence of odour.

2.4. LIMIT TESTS

01/2008:20401
corrected 8.0

2.4.1. AMMONIUM

Unless otherwise prescribed, use method A.

METHOD A

Introduce the prescribed solution into a test-tube or dissolve the prescribed quantity of the substance to be examined in 14 mL of *water R* in a test-tube. Make the solution alkaline if necessary by the addition of *dilute sodium hydroxide solution R*, dilute to 15 mL with *water R* and add 0.3 mL of *alkaline potassium tetraiodomercurate solution R*. Prepare a standard by mixing 10 mL of *ammonium standard solution (1 ppm NH_4) R*, 5 mL of *water R* and 0.3 mL of *alkaline potassium tetraiodomercurate solution R*. Stopper the test-tubes.

After 5 min, any yellow colour in the test solution is not more intense than that in the standard.

METHOD B

In a 25 mL jar fitted with a cap, place the prescribed quantity of the finely powdered substance to be examined and dissolve or suspend in 1 mL of *water R*. Add 0.30 g of *heavy magnesium oxide R*. Close immediately after placing a piece of *silver manganese paper R* 5 mm square, wetted with a few drops of *water R*, under the polyethylene cap. Swirl, avoiding projections of liquid, and allow to stand at 40 °C for 30 min. If the silver manganese paper shows a grey colour, it is not more intense than that of a standard prepared at the same time and in the same manner using the prescribed volume of *ammonium standard solution (1 ppm NH_4) R*, 1 mL of *water R* and 0.30 g of *heavy magnesium oxide R*.

01/2008:20402

2.4.2. ARSENIC

METHOD A

The apparatus (see Figure 2.4.2.-1) consists of a 100 mL conical flask closed with a ground-glass stopper through which passes a glass tube about 200 mm long and of internal diameter 5 mm. The lower part of the tube is drawn to an internal diameter of 1.0 mm, and 15 mm from its tip is a lateral orifice 2 mm to 3 mm in diameter. When the tube is in position in the stopper, the lateral orifice should be at least 3 mm below the lower surface of the stopper. The upper end of the tube has a perfectly flat, ground surface at right angles to the axis of the tube. A second glass tube of the same internal diameter and 30 mm long, with a similar flat ground surface, is placed in contact with the first, and is held in position by two spiral springs. Into the lower tube insert 50 mg to 60 mg of *lead acetate cotton R*, loosely packed, or a small plug of cotton and a rolled piece of *lead acetate paper R* weighing 50 mg to 60 mg. Between the flat surfaces of the tubes place a disc or a small square of *mercuric bromide paper R* large enough to cover the orifice of the tube (15 mm × 15 mm).

In the conical flask dissolve the prescribed quantity of the substance to be examined in 25 mL of *water R*, or in the case of a solution adjust the prescribed volume to 25 mL with *water R*. Add 15 mL of *hydrochloric acid R*, 0.1 mL of *stannous chloride solution R* and 5 mL of *potassium iodide solution R*, allow to stand for 15 min and introduce 5 g of *activated zinc R*. Assemble the two parts of the apparatus immediately and immerse the flask in a bath of water at a temperature such that a uniform evolution of gas is maintained. Prepare a standard in the same manner, using 1 mL of *arsenic standard solution (1 ppm As) R*, diluted to 25 mL with *water R*.

After not less than 2 h the stain produced on the mercuric bromide paper in the test is not more intense than that in the standard.

METHOD B

Introduce the prescribed quantity of the substance to be examined into a test-tube containing 4 mL of *hydrochloric acid R* and about 5 mg of *potassium iodide R* and add 3 mL of *hypophosphorous reagent R*. Heat the mixture on a water-bath for 15 min, shaking occasionally. Prepare a standard in the same manner, using 0.5 mL of *arsenic standard solution (10 ppm As) R*.

After heating on the water-bath, any colour in the test solution is not more intense than that in the standard.

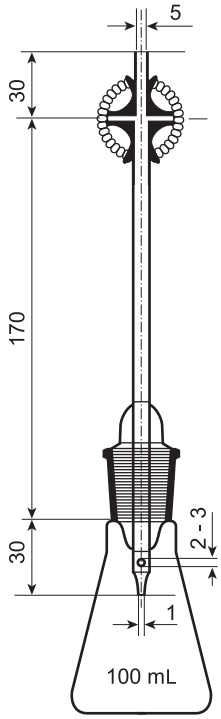

Figure 2.4.2.-1. - *Apparatus for limit test A for arsenic*
Dimensions in millimetres

01/2008:20403
corrected 8.0

2.4.3. CALCIUM

All solutions used for this test are prepared with distilled water R.

To 0.2 mL of *alcoholic calcium standard solution (100 ppm Ca) R* add 1 mL of *ammonium oxalate solution R*. After 1 min add a mixture of 1 mL of *dilute acetic acid R* and 15 mL of the prescribed solution or of a solution containing the prescribed quantity of the substance to be examined, and shake. Prepare a standard in the same manner using a mixture of 10 mL of aqueous *calcium standard solution (10 ppm Ca) R*, 1 mL of *dilute acetic acid R* and 5 mL of *distilled water R*.

After 15 min, any opalescence in the test solution is not more intense than that in the standard.

01/2008:20404

2.4.4. CHLORIDES

To 15 mL of the prescribed solution add 1 mL of *dilute nitric acid R* and pour the mixture as a single addition into a test-tube containing 1 mL of *silver nitrate solution R2*. Prepare a standard in the same manner using 10 mL of *chloride standard solution (5 ppm Cl) R* and 5 mL of *water R*. Examine the tubes laterally against a black background.

After standing for 5 min protected from light, any opalescence in the test solution is not more intense than that in the standard.

01/2008:20405

2.4.5. FLUORIDES

Introduce into the inner tube of the apparatus (see Figure 2.4.5.-1) the prescribed quantity of the substance to be examined, 0.1 g of acid-washed *sand R* and 20 mL of a mixture of equal volumes of *sulfuric acid R* and *water R*. Heat the jacket containing *tetrachloroethane R* maintained at its boiling point (146 °C). Heat the steam generator and distil, collecting the distillate in a 100 mL volumetric flask containing 0.3 mL of *0.1 M sodium hydroxide* and 0.1 mL of *phenolphthalein solution R*. Maintain a constant volume (20 mL) in the tube during distillation and ensure that the distillate remains alkaline, adding *0.1 M sodium hydroxide* if necessary. Dilute the distillate to 100 mL with *water R* (test solution). Prepare a standard in the same manner by distillation, using 5 mL of *fluoride standard solution (10 ppm F) R* instead of the substance to be examined. Into two glass-stoppered cylinders introduce 20 mL of the test solution and 20 mL of the standard and 5 mL of *aminomethylalizarindiacetic acid reagent R*.

After 20 min, any blue colour in the test solution (originally red) is not more intense than that in the standard.

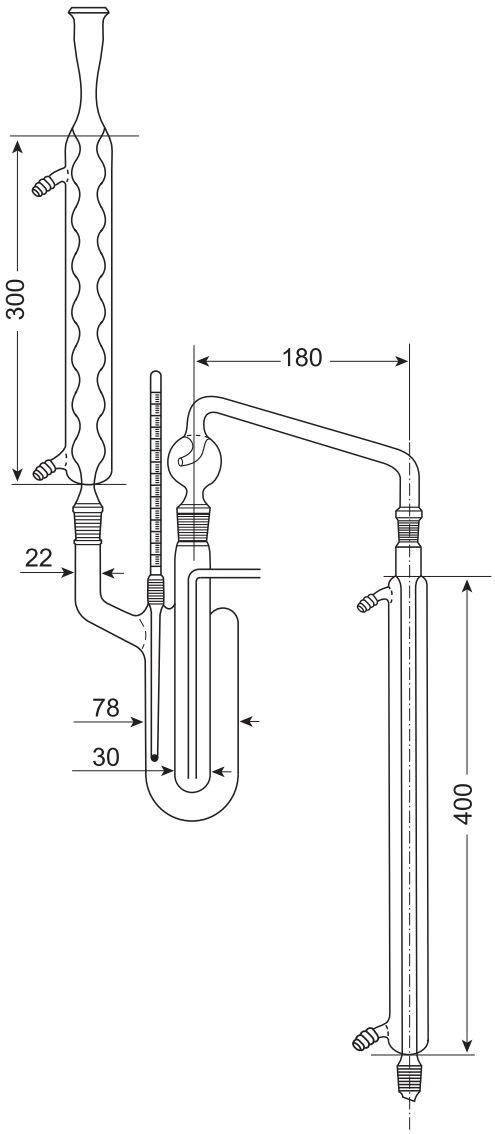

Figure 2.4.5.-1. – *Apparatus for limit test for fluorides*
Dimensions in millimetres

01/2008:20406

2.4.6. MAGNESIUM

To 10 mL of the prescribed solution add 0.1 g of *disodium tetraborate R*. Adjust the solution, if necessary, to pH 8.8 to pH 9.2 using *dilute hydrochloric acid R* or *dilute sodium hydroxide solution R*. Shake with 2 quantities, each of 5 mL, of a 1 g/L solution of *hydroxyquinoline R* in *chloroform R*, for 1 min each time. Allow to stand. Separate and discard the organic layer. To the aqueous solution add 0.4 mL of *butylamine R* and 0.1 mL of *triethanolamine R*. Adjust the solution, if necessary, to pH 10.5 to pH 11.5. Add 4 mL of the solution of hydroxyquinoline in chloroform, shake for 1 min, allow to stand and separate. Use the lower layer for comparison. Prepare a standard in the same manner using a mixture of 1 mL of *magnesium standard solution (10 ppm Mg) R* and 9 mL of *water R*.

Any colour in the solution obtained from the substance to be examined is not more intense than that in the standard.

01/2008:20407

2.4.7. MAGNESIUM AND ALKALINE-EARTH METALS

To 200 mL of *water R* add 0.1 g of *hydroxylamine hydrochloride R*, 10 mL of *ammonium chloride buffer solution pH 10.0 R*, 1 mL of *0.1 M zinc sulfate* and about 15 mg of *mordant black 11 triturate R*. Heat to about 40 °C. Titrate with *0.01 M sodium edetate* until the violet colour changes to full blue. To the solution add the prescribed quantity of the substance to be examined dissolved in 100 mL of *water R* or use the prescribed solution. If the colour of the solution changes to violet, titrate with *0.01 M sodium edetate* until the full blue colour is again obtained.

The volume of *0.01 M sodium edetate* used in the second titration does not exceed the prescribed quantity.

07/2010:20408

2.4.8. HEAVY METALS

The methods described below require the use of *thioacetamide reagent R*. As an alternative, *sodium sulfide solution R1* (0.1 mL) is usually suitable. Since tests prescribed in monographs have been developed using *thioacetamide reagent R*, if *sodium sulfide solution R1* is used instead, it is necessary to include also for methods A, B and H a monitor solution, prepared from the quantity of the substance to be examined prescribed for the test, to which has been added the volume of lead standard solution prescribed for preparation of the reference solution. The test is invalid if the monitor solution is not at least as intense as the reference solution.

METHOD A

Test solution. 12 mL of the prescribed aqueous solution of the substance to be examined.

Reference solution (standard). A mixture of 10 mL of *lead standard solution (1 ppm Pb) R* or *lead standard solution (2 ppm Pb) R*, as prescribed, and 2 mL of the prescribed aqueous solution of the substance to be examined.

Blank solution. A mixture of 10 mL of *water R* and 2 mL of the prescribed aqueous solution of the substance to be examined.

To each solution, add 2 mL of *buffer solution pH 3.5 R*. Mix and add to 1.2 mL of *thioacetamide reagent R*. Mix immediately. Examine the solutions after 2 min.

System suitability: the reference solution shows a slight brown colour compared to the blank solution.

Result: any brown colour in the test solution is not more intense than that in the reference solution.

If the result is difficult to judge, filter the solutions through a suitable membrane filter (nominal pore size 0.45 µm). Carry out the filtration slowly and uniformly, applying moderate and constant pressure to the piston. Compare the spots on the filters obtained with the different solutions.

METHOD B

Test solution. 12 mL of the prescribed solution of the substance to be examined prepared using an organic solvent containing a minimum percentage of water (for example, dioxan containing 15 per cent of water or acetone containing 15 per cent of water).

Reference solution (standard). A mixture of 10 mL of lead standard solution (1 or 2 ppm Pb), as prescribed, and 2 mL of the prescribed solution of the substance to be examined in an organic solvent. Prepare the lead standard solution (1 or 2 ppm Pb) by dilution of *lead standard solution (100 ppm Pb) R* with the solvent used for the substance to be examined.

Blank solution. A mixture of 10 mL of the solvent used for the substance to be examined and 2 mL of the prescribed solution of the substance to be examined in an organic solvent.

To each solution, add 2 mL of *buffer solution pH 3.5 R*. Mix and add to 1.2 mL of *thioacetamide reagent R*. Mix immediately. Examine the solutions after 2 min.

System suitability: the reference solution shows a slight brown colour compared to the blank solution.

Result: any brown colour in the test solution is not more intense than that in the reference solution.

If the result is difficult to judge, filter the solutions through a suitable membrane filter (nominal pore size 0.45 µm). Carry out the filtration slowly and uniformly, applying moderate and constant pressure to the piston. Compare the spots on the filters obtained with the different solutions.

METHOD C

Test solution. Place the prescribed quantity (not more than 2 g) of the substance to be examined in a silica crucible with 4 mL of a 250 g/L solution of *magnesium sulfate R* in *dilute sulfuric acid R*. Mix using a fine glass rod. Heat cautiously. If the mixture is liquid, evaporate gently to dryness on a water-bath. Progressively heat to ignition and continue heating until an almost white or at most greyish residue is obtained. Carry out the ignition at a temperature not exceeding 800 °C. Allow to cool. Moisten the residue with a few drops of *dilute sulfuric acid R*. Evaporate, ignite again and allow to cool. The total period of ignition must not exceed 2 h. Take up the residue in 2 quantities, each of 5 mL, of *dilute hydrochloric acid R*. Add 0.1 mL of *phenolphthalein solution R*, then *concentrated ammonia R* until a pink colour is obtained. Cool, add *glacial acetic acid R* until the solution is decolorised and add 0.5 mL in excess. Filter if necessary and wash the filter. Dilute to 20 mL with *water R*.

Reference solution (standard). Prepare as described for the test solution, using the prescribed volume of *lead standard solution (10 ppm Pb) R* instead of the substance to be examined. To 10 mL of the solution obtained add 2 mL of the test solution.

Monitor solution. Prepare as described for the test solution, adding to the substance to be examined the volume of *lead standard solution (10 ppm Pb) R* prescribed for preparation of the reference solution. To 10 mL of the solution obtained add 2 mL of the test solution.

Blank solution. A mixture of 10 mL of *water R* and 2 mL of the test solution.

To 12 mL of each solution, add 2 mL of *buffer solution pH 3.5 R*. Mix and add to 1.2 mL of *thioacetamide reagent R*. Mix immediately. Examine the solutions after 2 min.

System suitability:

- the reference solution shows a slight brown colour compared to the blank solution,
- the monitor solution is at least as intense as the reference solution.

Result: any brown colour in the test solution is not more intense than that in the reference solution.

If the result is difficult to judge, filter the solutions through a suitable membrane filter (nominal pore size 0.45 µm). Carry out the filtration slowly and uniformly, applying moderate and constant pressure to the piston. Compare the spots on the filters obtained with the different solutions.

METHOD D

Test solution. In a silica crucible, mix thoroughly the prescribed quantity of the substance to be examined with 0.5 g of *magnesium oxide R1*. Ignite to dull redness until a homogeneous white or greyish-white mass is obtained. If after 30 min of ignition the mixture remains coloured, allow to cool, mix using a fine glass rod and repeat the ignition. If necessary repeat the operation. Heat at 800 °C for about 1 h. Take up the residue in 2 quantities, each of 5 mL, of a mixture of equal volumes of *hydrochloric acid R1* and *water R*. Add 0.1 mL of *phenolphthalein solution R* and then *concentrated ammonia R* until a pink colour is obtained. Cool, add *glacial acetic acid R* until the solution is decolorised and add 0.5 mL in excess. Filter if necessary and wash the filter. Dilute to 20 mL with *water R*.

Reference solution (standard). Prepare as described for the test solution using the prescribed volume of *lead standard solution (10 ppm Pb) R* instead of the substance to be examined and drying in an oven at 100-105 °C. To 10 mL of the solution obtained add 2 mL of the test solution.

Monitor solution. Prepare as described for the test solution, adding to the substance to be examined the volume of *lead standard solution (10 ppm Pb) R* prescribed for preparation of the reference solution and drying in an oven at 100-105 °C. To 10 mL of the solution obtained add 2 mL of the test solution.

Blank solution. A mixture of 10 mL of *water R* and 2 mL of the test solution.

To 12 mL of each solution, add 2 mL of *buffer solution pH 3.5 R*. Mix and add to 1.2 mL of *thioacetamide reagent R*. Mix immediately. Examine the solutions after 2 min.

System suitability:

- the reference solution shows a slight brown colour compared to the blank solution,
- the monitor solution is at least as intense as the reference solution.

Result: any brown colour in the test solution is not more intense than that in the reference solution.

If the result is difficult to judge, filter the solutions through a suitable membrane filter (nominal pore size 0.45 µm). Carry out the filtration slowly and uniformly, applying moderate and constant pressure to the piston. Compare the spots on the filters obtained with the different solutions.

METHOD E

Test solution. Dissolve the prescribed quantity of the substance to be examined in 30 mL of *water R* or the prescribed volume.

Reference solution (standard). Unless otherwise prescribed, dilute the prescribed volume of *lead standard solution (1 ppm Pb) R* to the same volume as the test solution.

Prepare the filtration apparatus by adapting the barrel of a 50 mL syringe without its piston to a support containing, on the plate, a membrane filter (nominal pore size 3 µm) and above it a prefilter (Figure 2.4.8.-1).

Transfer the test solution into the syringe barrel, put the piston in place and then apply an even pressure on it until the whole of the liquid has been filtered. In opening the support and removing the prefilter, check that the membrane filter remains uncontaminated with impurities. If this is not the case replace it with another membrane filter and repeat the operation under the same conditions.

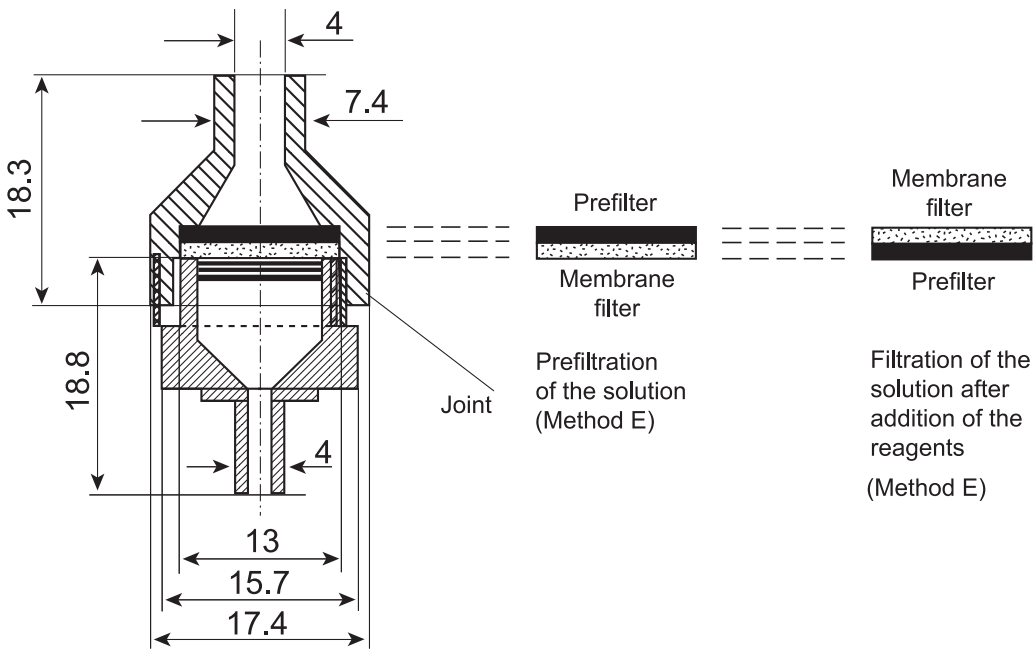

Figure 2.4.8.-1. – *Apparatus for the test for heavy metals*
Dimensions in millimetres

To the prefiltrate or to the prescribed volume of the prefiltrate add 2 mL of *buffer solution pH 3.5 R*. Mix and add to 1.2 mL of *thioacetamide reagent R*. Mix immediately and allow to stand for 10 min and again filter as described above, but inverting the order of the filters, the liquid passing first through the membrane filter before passing through the prefilter (Figure 2.4.8.-1). The filtration must be carried out slowly and uniformly by applying moderate and constant pressure to the piston of the syringe. After complete filtration, open the support, remove the membrane filter, and dry using filter paper.

In parallel, treat the reference solution in the same manner as the test solution.

Result: the colour of the spot obtained with the test solution is not more intense than that obtained with the reference solution.

METHOD F

Test solution. Place the prescribed quantity or volume of the substance to be examined in a clean, dry, 100 mL long-necked combustion flask (a 300 mL flask may be used if the reaction foams excessively). Clamp the flask at an angle of 45°. If the substance to be examined is a solid, add a sufficient volume of a mixture of 8 mL of *sulfuric acid R* and 10 mL of *nitric acid R* to moisten the substance thoroughly; if the substance to be examined is a liquid, add a few millilitres of a mixture of 8 mL of *sulfuric acid R* and 10 mL of *nitric acid R*. Warm gently until the reaction commences, allow the reaction to subside and add additional portions of the same acid mixture, heating after each addition, until a total of 18 mL of the acid mixture has been added. Increase the amount of heat and boil gently until the solution darkens. Cool, add 2 mL of *nitric acid R* and heat again until the solution darkens. Continue the heating, followed by the addition of *nitric acid R* until no further darkening occurs, then heat strongly until dense, white fumes are produced. Cool, cautiously add 5 mL of *water R*, boil gently until dense, white fumes are produced and continue heating to reduce to 2-3 mL. Cool, cautiously add 5 mL of *water R* and examine the colour of the solution. If the colour is yellow, cautiously add 1 mL of *strong hydrogen peroxide solution R* and again evaporate until dense, white fumes are produced and reduce to a volume of 2-3 mL. If the solution is still yellow in colour, repeat the addition of 5 mL of *water R* and 1 mL of *strong hydrogen peroxide solution R* until the solution is colourless. Cool, dilute cautiously with *water R* and rinse into a 50 mL colour comparison tube, ensuring that the total volume does not exceed 25 mL. Adjust the solution to pH 3.0-4.0, using short range pH indicator paper as external indicator, with *concentrated ammonia R1* (*dilute ammonia R1* may be used, if desired, as the specified range is approached), dilute with *water R* to 40 mL and mix. Add 2 mL of *buffer solution pH 3.5 R*. Mix and add to 1.2 mL of *thioacetamide reagent R*. Mix immediately. Dilute to 50 mL with *water R* and mix.

Reference solution (standard). Prepare at the same time and in the same manner as the test solution, using the prescribed volume of *lead standard solution (10 ppm Pb) R*.

Monitor solution. Prepare as described for the test solution, adding to the substance to be examined the volume of *lead standard solution (10 ppm Pb) R* prescribed for the preparation of the reference solution.

Blank solution. Prepare as described for the test solution, omitting the substance to be examined.

Examine the solutions vertically against a white background after 2 min.

System suitability:

- the reference solution shows a brown colour compared to the blank solution,
- the monitor solution is at least as intense as the reference solution.

Result: any brown colour in the test solution is not more intense than that in the reference solution.

If the result is difficult to judge, filter the solutions through a suitable membrane filter (nominal pore size 0.45 µm). Carry out the filtration slowly and uniformly, applying moderate and constant pressure to the piston. Compare the spots on the filters obtained with the different solutions.

METHOD G

CAUTION: when using high-pressure digestion vessels the safety precautions and operating instructions given by the manufacturer must be followed. The digestion cycles have to be elaborated depending on the type of microwave oven to be used (for example, energy-controlled microwave ovens, temperature-controlled microwave ovens or high-pressure ovens). The cycle must conform to the manufacturer's instructions. The digestion cycle is suitable if a clear solution is obtained.

Test solution. Place the prescribed amount of the substance to be examined (not more than 0.5 g) in a suitable, clean beaker. Add successively 2.7 mL of *sulfuric acid R*, 3.3 mL of *nitric acid R* and 2.0 mL of *strong hydrogen peroxide solution R* using a magnetic stirrer. Allow the substance to react with a reagent before adding the next one. Transfer the mixture to a dry high-pressure-resistant digestion vessel (fluoropolymer or quartz glass).

Reference solution (standard). Prepare as described for the test solution, using the prescribed volume of *lead standard solution (10 ppm Pb) R* instead of the substance to be examined.

Monitor solution. Prepare as prescribed for the test solution, adding to the substance to be examined the volume of *lead standard solution (10 ppm Pb) R* prescribed for the preparation of the reference solution.

Blank solution. Prepare as described for the test solution, omitting the substance to be examined.

Close the vessels and place in a laboratory microwave oven. Digest using a sequence of 2 separate suitable programmes. Design the programmes in several steps in order to control the reaction, monitoring pressure, temperature or energy depending on the type of microwave oven available. After the first programme allow the digestion vessels to cool before opening. Add to each vessel 2.0 mL of *strong hydrogen peroxide solution R* and digest using the second programme. After the second programme allow the digestion vessels to cool before opening. If necessary to obtain a clear solution, repeat the addition of *strong hydrogen peroxide solution R* and the second digestion programme.

Cool, dilute cautiously with *water R* and rinse into a flask, ensuring that the total volume does not exceed 25 mL.

Using short-range pH indicator paper as external indicator, adjust the solutions to pH 3.0-4.0 with *concentrated ammonia R1* (*dilute ammonia R1* may be used as the specified range is approached). To avoid heating of the solutions use an ice-bath and a magnetic stirrer. Dilute to 40 mL with *water R* and mix. Add 2 mL of *buffer solution pH 3.5 R*. Mix and add to 1.2 mL of *thioacetamide reagent R*. Mix immediately. Dilute to 50 mL with *water R*, mix and allow to stand for 2 min.

Filter the solutions through a suitable membrane filter (nominal pore size 0.45 µm). Carry out the filtration slowly and uniformly, applying moderate and constant pressure to the piston. Compare the spots on the filters obtained with the different solutions.

System suitability:

- the spot obtained with the reference solution shows a brown colour compared to the spot obtained with the blank solution,
- the spot obtained with the monitor solution is at least as intense as the spot obtained with the reference solution.

Result: the brown colour of the spot obtained with the test solution is not more intense than that of the spot obtained with the reference solution.

METHOD H

Test solution. Dissolve the prescribed quantity of the substance to be examined in 20 mL of the solvent or solvent mixture prescribed.

Reference solution. Dilute the prescribed volume of *lead standard solution (10 ppm Pb) R* to 20 mL with the solvent or solvent mixture prescribed.

Blank solution. 20 mL of the solvent or solvent mixture prescribed.

To each solution, add 2 mL of *buffer solution pH 3.5 R*. Mix. *(In some cases precipitation occurs, in which case the specific monograph would describe re-dissolution in a defined volume of a given solvent.)* Add to 1.2 mL of *thioacetamide reagent R*. Mix immediately and allow to stand for 2 min. Filter the solutions through a suitable membrane filter (nominal pore size 0.45 µm). Compare the spots on the filters obtained with the different solutions.

System suitability: the spot obtained with the reference solution shows a brownish-black colour compared to the spot obtained with the blank solution.

Result: the brownish-black colour of the spot obtained with the test solution is not more intense than that of the spot obtained with the reference solution.

01/2008:20409

2.4.9. IRON

Dissolve the prescribed quantity of the substance to be examined in *water R* and dilute to 10 mL with the same solvent or use 10 mL of the prescribed solution. Add 2 mL of a 200 g/L solution of *citric acid R* and 0.1 mL of *thioglycollic acid R*. Mix, make alkaline with *ammonia R* and dilute to 20 mL with *water R*. Prepare a standard in the same manner, using 10 mL of *iron standard solution (1 ppm Fe) R*.

After 5 min, any pink colour in the test solution is not more intense than that in the standard.

01/2008:20410

2.4.10. LEAD IN SUGARS

Determine the lead by atomic absorption spectrometry (*2.2.23, Method II*).

Test solution. Dissolve 20.0 g of the substance to be examined in a mixture of equal volumes of *dilute acetic acid R* and *water R* and dilute to 100.0 mL with the same mixture of solvents. Add 2.0 mL of a clear 10 g/L solution of *ammonium pyrrolidinedithiocarbamate R* and 10.0 mL of *methyl isobutyl ketone R* and then shake for 30 s protected from bright light. Allow the layers to separate and use the methyl isobutyl ketone layer.

Reference solutions. Prepare 3 reference solutions in the same manner as the test solution but adding 0.5 mL, 1.0 mL and 1.5 mL respectively of *lead standard solution (10 ppm Pb) R* in addition to the 20.0 g of the substance to be examined.

Set the zero of the instrument using *methyl isobutyl ketone R* treated as described for the test solution without the substance to be examined. Measure the absorbance at 283.3 nm using a lead hollow-cathode lamp as source of radiation and an air-acetylene flame.

The substance to be examined contains not more than 0.5 ppm of lead, unless otherwise prescribed.

01/2008:20411

2.4.11. PHOSPHATES

To 100 mL of the solution prepared and, if necessary, neutralised as prescribed add 4 mL of *sulfomolybdic reagent R3*. Shake and add 0.1 mL of *stannous chloride solution R1*. Prepare a standard in the same manner using 2 mL of *phosphate standard solution (5 ppm PO_4) R* and 98 mL of *water R*. After 10 min, compare the colours using 20 mL of each solution.

Any colour in the test solution is not more intense than that in the standard.

01/2008:20412

2.4.12. POTASSIUM

To 10 mL of the prescribed solution add 2 mL of a freshly prepared 10 g/L solution of *sodium tetraphenylborate R*. Prepare a standard in the same manner using a mixture of 5 mL of *potassium standard solution (20 ppm K) R* and 5 mL of *water R*.

After 5 min, any opalescence in the test solution is not more intense than that in the standard.

01/2008:20413
corrected 8.0

2.4.13. SULFATES

All solutions used for this test must be prepared with distilled water R.

Add 3 mL of a 250 g/L solution of *barium chloride R* to 4.5 mL of *sulfate standard solution (10 ppm SO_4) R1*. Shake and allow to stand for 1 min. To 2.5 mL of this suspension add 15 mL of the prescribed solution and 0.5 mL of *acetic acid R*. Prepare a standard in the same manner using 15 mL of *sulfate standard solution (10 ppm SO_4) R* instead of the prescribed solution.

After 5 min, any opalescence in the test solution is not more intense than that in the standard.

04/2010:20414

2.4.14. SULFATED ASH[(1)]

Ignite a suitable crucible (for example, silica, platinum, porcelain or quartz) at 600 ± 50 °C for 30 min, allow to cool in a desiccator over silica gel or other suitable desiccant and weigh. Place the prescribed amount of the substance to be examined in the crucible and weigh. Moisten the substance to be examined with a small amount of *sulfuric acid R* (usually 1 mL) and heat gently at as low a temperature as practicable until the sample is thoroughly charred. After cooling, moisten the residue with a small amount of *sulfuric acid R* (usually 1 mL), heat gently until white fumes are no longer evolved and ignite at 600 ± 50 °C until the residue is completely incinerated. Ensure that flames are not produced at any time during the procedure. Allow the crucible to cool in a desiccator over silica gel or other suitable desiccant, weigh it again and calculate the percentage of residue.

If the amount of the residue so obtained exceeds the prescribed limit, repeat the moistening with *sulfuric acid R* and ignition, as previously, for 30 min periods until 2 consecutive weighings do not differ by more than 0.5 mg or until the percentage of residue complies with the prescribed limit.

The amount of substance used for the test (usually 1-2 g) is chosen so that at the prescribed limit the mass of the residue (usually about 1 mg) can be measured with sufficient accuracy.

01/2008:20415
corrected 7.0

2.4.15. NICKEL IN POLYOLS

Determine the nickel by atomic absorption spectrometry (*2.2.23, Method II*).

Test solution. Dissolve 20.0 g of the substance to be examined in a mixture of equal volumes of *dilute acetic acid R* and *water R* and dilute to 100.0 mL with the same mixture of solvents. Add 2.0 mL of a saturated solution of *ammonium pyrrolidinedithiocarbamate R* (about 10 g/L) and 10.0 mL of *methyl isobutyl ketone R* and then shake for 30 s protected from bright light. Allow the layers to separate and use the methyl isobutyl ketone layer.

Reference solutions. Prepare 3 reference solutions in the same manner as the test solution but adding 0.5 mL, 1.0 mL and 1.5 mL respectively of *nickel standard solution (10 ppm Ni) R* in addition to the 20.0 g of the substance to be examined.

Set the zero of the instrument using *methyl isobutyl ketone R* treated as described for preparation of the test solution omitting the substance to be examined. Measure the absorbance at 232.0 nm using a nickel hollow-cathode lamp as source of radiation and an air-acetylene flame.

The substance to be examined contains not more than 1 ppm of nickel, unless otherwise prescribed.

01/2008:20416

2.4.16. TOTAL ASH

Heat a silica or platinum crucible to redness for 30 min, allow to cool in a desiccator and weigh. Unless otherwise prescribed, evenly distribute 1.00 g of the substance or the powdered herbal drug to be examined in the crucible. Dry at 100 °C to 105 °C for 1 h and ignite to constant mass in a muffle furnace at 600 °C ± 25 °C, allowing the crucible to cool in a desiccator after each ignition. Flames should not be produced at any time during the procedure. If after prolonged ignition the ash still contains black particles, take up with hot water, filter through an ashless filter paper and ignite the residue and the filter paper. Combine the filtrate with the ash, carefully evaporate to dryness and ignite to constant mass.

01/2008:20417

2.4.17. ALUMINIUM

Place the prescribed solution in a separating funnel and shake with 2 quantities, each of 20 mL, and then with one 10 mL quantity of a 5 g/L solution of *hydroxyquinoline R* in *chloroform R*. Dilute the combined chloroform solutions to 50.0 mL with *chloroform R* (test solution).

Prepare a standard in the same manner using the prescribed reference solution.

Prepare a blank in the same manner using the prescribed blank solution.

Measure the intensity of the fluorescence (*2.2.21*) of the test solution (I_1), of the standard (I_2) and of the blank (I_3) using an excitant beam at 392 nm and a secondary filter with a transmission band centred on 518 nm or a monochromator set to transmit at this wavelength.

The fluorescence ($I_1 - I_3$) of the test solution is not greater than that of the standard ($I_2 - I_3$).

01/2008:20418

2.4.18. FREE FORMALDEHYDE

Use method A, unless otherwise prescribed. Method B is suitable for vaccines where sodium metabisulfite has been used to neutralise excess formaldehyde.

METHOD A

For vaccines for human use, prepare a 1 in 10 dilution of the vaccine to be examined. For bacterial toxoids for veterinary use, prepare a 1 in 25 dilution of the vaccine to be examined.

To 1 mL of the dilution, add 4 mL of *water R* and 5 mL of *acetylacetone reagent R1*. Place the tube in a water-bath at 40 °C for 40 min. Examine the tubes down their vertical axes. The solution is not more intensely coloured than a standard, prepared at the same time and in the same manner, using 1 mL of a dilution of *formaldehyde solution R* containing 20 µg of formaldehyde (CH_2O) per millilitre, instead of the dilution of the vaccine to be examined.

(1) This chapter has undergone pharmacopoeial harmonisation. See chapter *5.8. Pharmacopoeial harmonisation.*

METHOD B

Test solution. Prepare a 1 in 200 dilution of the vaccine to be examined with *water R*. If the vaccine is an emulsion, prepare an equivalent dilution using the aqueous phase separated by a suitable procedure (see below). If one of the methods described below is used for separation of the aqueous phase, a 1 in 20 dilution of the latter is used.

Reference solutions. Prepare solutions containing 0.25 g/L, 0.50 g/L, 1.00 g/L and 2.00 g/L of CH_2O by dilution of *formaldehyde solution R* with *water R*. Prepare a 1 in 200 dilution of each solution with *water R*.

To 0.5 mL of the test solution and of each of the reference solutions in test-tubes, add 5.0 mL of a freshly prepared 0.5 g/L solution of *methylbenzothiazolone hydrazone hydrochloride R*. Close the tubes, shake and allow to stand for 60 min. Add 1 mL of *ferric chloride-sulfamic acid reagent R* and allow to stand for 15 min. Measure the absorbance (*2.2.25*) of the solutions at 628 nm. Calculate the content of formaldehyde in the vaccine to be examined from the calibration curve established using the reference solutions. The test is invalid if the correlation coefficient (*r*) of the calibration curve is less than 0.97.

Emulsions. If the vaccine to be examined is an emulsion, the aqueous phase is separated using a suitable procedure and used for preparation of the test solution. The following procedures have been found suitable.

(a) Add 1.0 mL of the vaccine to be examined to 1.0 mL of *isopropyl myristate R* and mix. Add 1.3 mL of *1 M hydrochloric acid*, 2.0 mL of *chloroform R* and 2.7 mL of a 9 g/L solution of *sodium chloride R*. Mix thoroughly. Centrifuge at 15 000 *g* for 60 min. Transfer the aqueous phase to a 10 mL volumetric flask and dilute to volume with *water R*. If this procedure fails to separate the aqueous phase, add 100 g/L of *polysorbate 20 R* to the sodium chloride solution and repeat the procedure but centrifuge at 22 500 *g*.

(b) Add 1.0 mL of the vaccine to be examined to 1.0 mL of a 100 g/L solution of *sodium chloride R* and mix. Centrifuge at 1000 *g* for 15 min. Transfer the aqueous phase to a 10 mL volumetric flask and dilute to volume with *water R*.

(c) Add 1.0 mL of the vaccine to be examined to 2.0 mL of a 100 g/L solution of *sodium chloride R* and 3.0 mL of *chloroform R* and mix. Centrifuge at 1000 *g* for 5 min. Transfer the aqueous phase to a 10 mL volumetric flask and dilute to volume with *water R*.

01/2008:20419

2.4.19. ALKALINE IMPURITIES IN FATTY OILS

In a test-tube mix 10 mL of recently distilled *acetone R* and 0.3 mL of *water R* and add 0.05 mL of a 0.4 g/L solution of *bromophenol blue R* in *alcohol R*. Neutralise the solution if necessary with *0.01 M hydrochloric acid* or *0.01 M sodium hydroxide*. Add 10 mL of the oil to be examined, shake and allow to stand. Not more than 0.1 mL of *0.01 M hydrochloric acid* is required to change the colour of the upper layer to yellow.

04/2013:20420

2.4.20. DETERMINATION OF METAL CATALYST OR METAL REAGENT RESIDUES

INTRODUCTION

This chapter describes the general approach for the determination of metal catalyst or metal reagent residues in substances for pharmaceutical use. As the chemical composition of the considered substances and the specification limits for the metal(s) of interest vary considerably, it is not possible to describe all suitable sample preparation and measurement methods. Therefore, any method that fulfils the requirements described in this chapter may be used.

The results of the analysis are acceptable only if the system suitability has been demonstrated by a suitable test. Before the initial use of a method, the analyst must ensure that the method is appropriate for the samples and instruments used. This is accomplished by applying a validation procedure to methods not described in the specific monograph or by a system suitability test for methods described in the monograph. Decision trees for the choice of the sample preparation and the measurement procedures are presented in Figures 2.4.20.-1 and 2.4.20.-2.

PROCEDURES

As a reference procedure is not provided for each metal, matrix and concentration, the choice of procedure according to Figures 2.4.20.-1 and 2.4.20.-2, including sample preparation, detection technique and instrument parameters, is the responsibility of the user.

Use the flow chart in Figure 2.4.20.-1 to define the sample preparation method and the flow chart in Figure 2.4.20.-2 to define the measurement method. The sample preparation method should yield a sufficient quantity of sample to allow quantification of each metal at the specified limit stated in the specific monograph or the general chapter.

All suitable sample preparation methods and measurement techniques (e.g. *2.2.22. Atomic emission spectrometry* (AES), *2.2.23. Atomic absorption spectrometry* (AAS), *2.2.37. X-ray fluorescence spectrometry* (XRFS), *2.2.57. Inductively coupled plasma-atomic emission spectrometry* (ICP-AES), *2.2.58. Inductively coupled plasma-mass spectrometry* (ICP-MS), *2.4.2. Arsenic*, *2.4.8. Heavy metals*, *2.4.9. Iron*, *2.4.10. Lead in sugars*, *2.4.15. Nickel in polyols*, *2.4.31. Nickel in hydrogenated vegetable oils*) can be used for the determination of metal residues, if the method has been verified before the initial use by a system suitability test or a validation procedure according to this chapter.

If no sample preparation and/or measurement method is described in the specific monograph, a suitable sample preparation and/or measurement method must be developed and validated (see Figures 2.4.20.-1 and 2.4.20.-2).

SAMPLE PREPARATION

Sample preparation is critical to the success of elemental analysis. Many techniques not using direct measurement are heavily dependent on sample transport.

If an atomisation system is used, the most conventional means by which samples are introduced into the atomisation system is by solution nebulisation. In this case, solid samples must be dissolved in order to be introduced into the atomisation system. Samples may be dissolved in any appropriate solvent. The use of aqueous or dilute nitric acid solutions is strongly recommended, due to minimal interference with these solvents compared to other solvents. Hydrochloric acid, hydrofluoric acid, perchloric acid, sulfuric acid and hydrogen peroxide, at various concentrations, can be used to dissolve the samples. The viscosity of sulfuric acid is greater than that of the other acids and is to be taken into account as it can affect the overall fluidity of the solution. The choice of solvents includes, but is not limited to, the use of dilute bases, straight or diluted organic solvents, combinations of acids or bases, and combinations of organic solvents. Acids, bases, and hydrogen peroxide of high purity must be used, especially when ICP-MS is employed. For aqueous solutions, use *deionised distilled water R*. Diluents must be checked for interference if they are used in an analysis. Because it is not always possible to obtain organic solvents that are free of metals, organic solvents of the highest purity possible with regard to metal contaminants must be used. Specifically

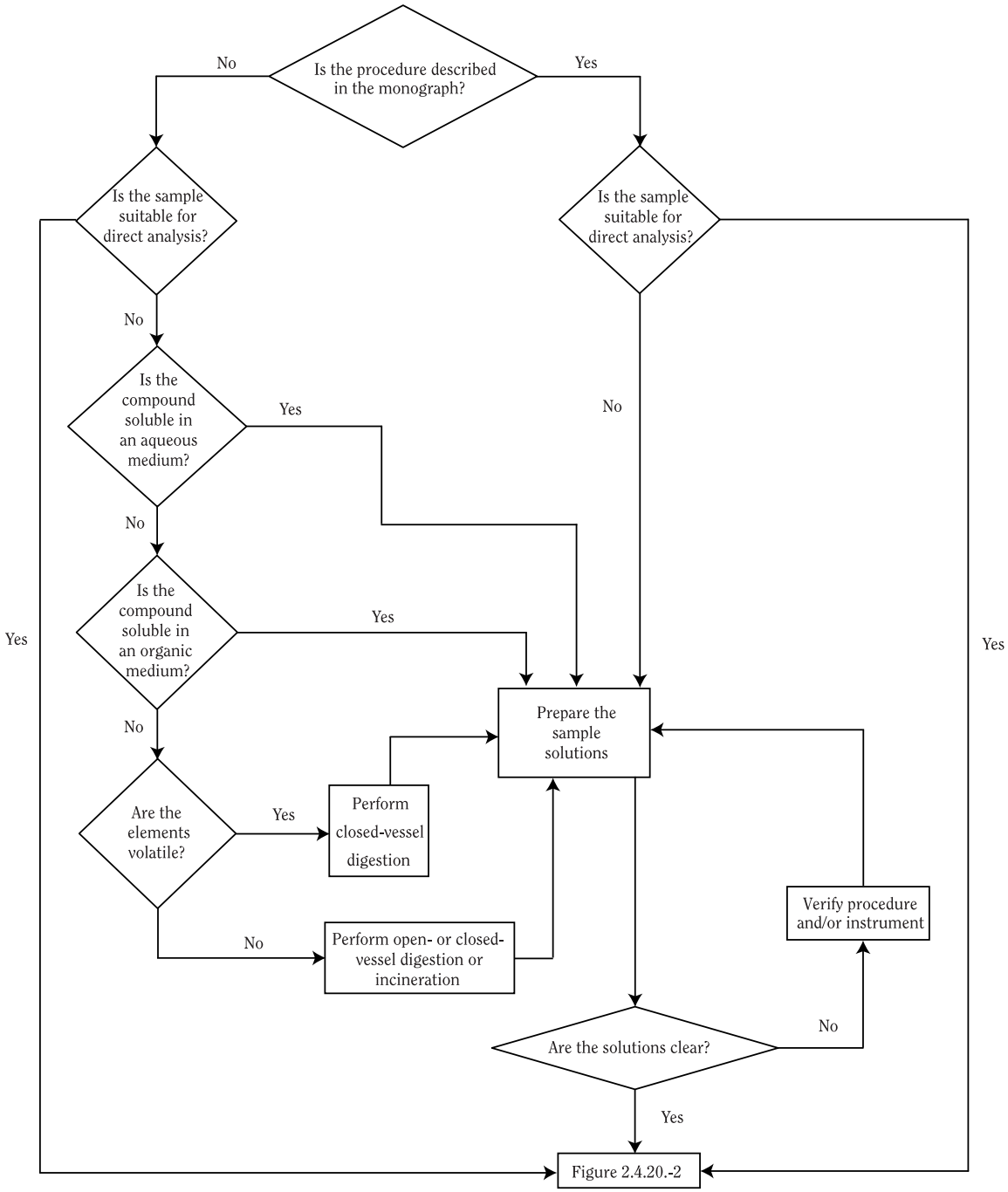

Figure 2.4.20.-1. – *Metal residues decision tree: sample preparation*

for ICP techniques, where samples are introduced into the plasma via solution nebulisation, it is important to consider the potential matrix effects and interferences that might arise from the solvent. The use of an appropriate internal standard and/or matching the standard matrix with samples should be applied for ICP-AES and ICP-MS analyses in cases where accuracy and precision are not sufficient. In any case, the selection of an appropriate internal standard should take into account the metal(s) of interest, ionisation energy, wavelengths or masses, and the nature of the sample matrix.

Where a sample is found not to be soluble in any acceptable solvent, a variety of digestion or incineration techniques can be employed. These include hot-plate digestion, incineration and microwave-assisted digestions, using open- and closed-vessel.

The decision regarding the type of digestion technique to be used depends on the nature of the sample being digested, as well as on the metal(s) of interest and the concentration range of the metals to be quantified. Open-vessel digestion is not recommended for the analysis of volatile metals.

The suitability of a digestion technique, whether open- or closed-vessel, should be supported by spike recovery experiments in order to verify that, within an acceptable tolerance, volatile metals have not been lost during sample preparation. The digestion cycle is suitable if a clear solution is obtained.

It is important to consider the selection of the type, the material of construction, the pretreatment, and the cleaning of analytical labware used in elemental analyses. The material must be inert and, depending on the specific application, resistant to caustics, acids, and/or organic solvents. For some analyses, care must be exercised to prevent the adsorption of metals onto the surface of a vessel, particularly in ultra-trace analyses. Contamination of sample solutions by metals and ions present in the container can also lead to inaccurate results.

The use of volumetric glassware that does not comply with Class A requirements of the appropriate International Standard of the International Organization for Standardization (ISO) is acceptable if the validation or the system suitability

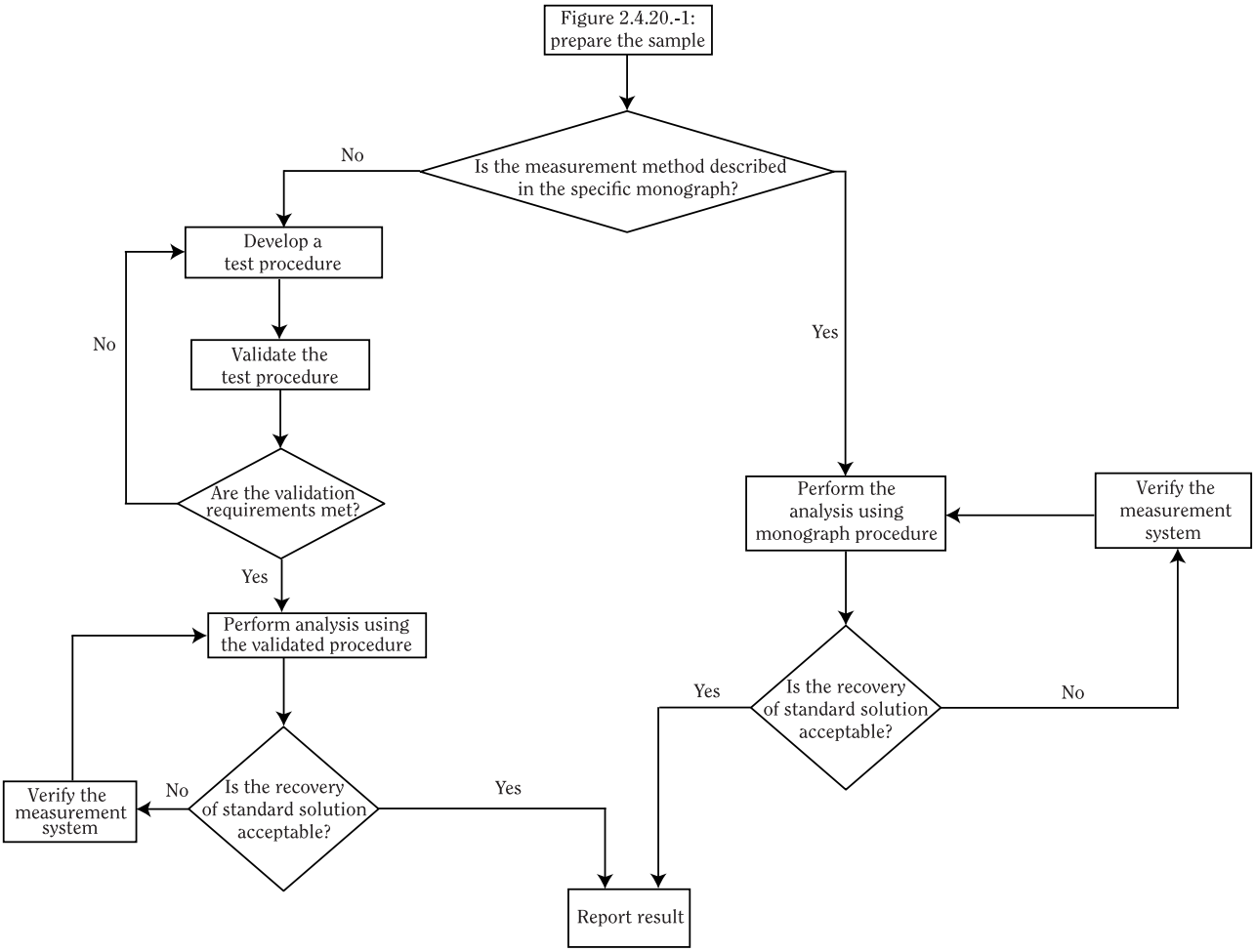

Figure 2.4.20.-2. – *Metal residues decision tree: measurement*

test of the method using such glassware have experimentally demonstrated that the method is suitable for the intended purpose.

CAUTION: when using high-pressure digestion vessels and microwave laboratory equipment, the safety precautions and operating instructions given by the manufacturer must be followed.

MEASUREMENT

Method. The choice of the techniques depends mainly on the sample matrix and the characteristics and specification limits of the metal(s) of interest. Analyse according to the instructions of the manufacturer of the apparatus regarding programme and wavelength.

System suitability. A system suitability test must be carried out on the day of the analysis to ensure that the sample preparation and measurement system are appropriate.

Acceptance criterion for preparation of sample solution: a clear solution is obtained.

Acceptance criterion for measurement system: the measured concentration of a standard solution of the metal at a concentration within the range of the used calibration curve does not differ from the actual concentration by more than 20 per cent.

Calculation. The blank value of reagents must be taken into account for the calculation of the content. Upon completion of the analysis, the concentration of a given metal in the sample is calculated by the software of the instrument from the concentration of the metal in the test solution. If no calculation software is available or no indication for calculation is given in the corresponding general chapter in section *2.2. Physical and physicochemical methods*, the concentration of a given metal in the sample can be calculated from the concentration of the metal in the solution using the following expression:

$$C = A \times \frac{V_1}{m} \times \frac{V_2}{V_3}$$

C = concentration of metal in the analysed sample, in micrograms per gram;

A = instrument reading of the concentration of the metal in the sample solution, in micrograms per millilitre;

m = mass of the sample in the initial sample solution, in grams;

V_1 = volume of the initial sample preparation, in millilitres;

V_2 = total volume of any dilution performed, in millilitres;

V_3 = volume of initial sample preparation used in any dilution performed, in millilitres.

VALIDATION REQUIREMENTS

Some validation requirements provided below may differ from those provided in general chapters of the Ph. Eur. (e.g. *2.2.22* (AES), *2.2.23* (AAS), *2.2.57* (ICP-AES), *2.2.58* (ICP-MS)).

Before the initial use of the selected procedure, the analyst must ensure that the sample preparation and measurement method are appropriate for the metal(s), sample matrix and instrument used. This is accomplished by following the validation procedure before the initial use and the system suitability test on the day of the analysis.

For metal residues, validation of a limit test must include specificity and limit of detection.

The following section defines the characteristics for the acceptability of a quantitative procedure. It must be demonstrated experimentally that such a procedure complies with the validation requirements, with an appropriate system suitability test using material spiked with a suitable reference material. The test materials must be spiked before any sample preparation steps. For example, if a test material is to be digested, the material must be spiked at the beginning of the digestion procedure.

SPECIFICITY

Specificity is the ability to ensure that the analytical procedures for sample preparation and measurement allow a reliable determination of the metal(s) in the presence of components (e.g. carrier gas, impurities, matrix) that may be expected to be present.

Acceptance criteria: the procedure must be able to assess unequivocally each metal residue to be determined with this procedure in the presence of components that may be expected to be present, including other metal residues, matrix components, and other sources of interference; specificity is demonstrated by complying with the accuracy requirement for the metal(s) to be determined.

RANGE

Acceptance criterion: range is demonstrated by complying with the recovery requirement.

ACCURACY

Verify the accuracy using a certified reference material (CRM) or by performing a test for recovery.

Recovery. Recovery may be determined on a sample of the substance to be examined, spiked with a known quantity of a reference standard of the metal (3 concentration levels in the range of 50-150 per cent of the intended specification limit, even if the original concentration of the reference standard is at the specified value), in triplicate.

Acceptance criterion: spike recovery is within 70 per cent and 150 per cent for the mean of 3 replicates at each concentration.

REPEATABILITY

Test samples: either 6 independent samples of the substance to be examined spiked with a suitable reference standard at the specified concentration level, or 3 concentration levels prepared in triplicate.

Acceptance criterion: the relative standard deviation is in both cases not more than 20 per cent.

INTERMEDIATE PRECISION

The effect of random events (intra-laboratory variations) on the analytical precision of the method must be established. Acceptable experiments for establishing intermediate precision include performing the repeatability analysis on different days, or with different instrumentation, or by different analysts. Only 1 of the 3 experiments is required to demonstrate intermediate precision.

Acceptance criterion: the relative standard deviation is not more than 25 per cent.

LIMIT OF QUANTIFICATION

Determine the lowest concentration meeting the acceptance criterion. Use the results from the accuracy study.

Acceptance criterion: the limit of quantification is below the specification limit.

LIMIT OF DETECTION (ONLY APPLICABLE TO LIMIT TESTS)

Determine the lowest concentration giving a signal clearly distinct from that obtained with a blank solution.

Acceptance criterion: the limit of detection is not more than 0.5 times the concentration of the specification limit.

01/2008:20421

2.4.21. FOREIGN OILS IN FATTY OILS BY THIN-LAYER CHROMATOGRAPHY

Examine by thin-layer chromatography (*2.2.27*) using *kieselguhr G R* as the coating substance. Impregnate a plate by placing it in a chromatographic tank containing the necessary quantity of a mixture of 10 volumes of *liquid paraffin R* and 90 volumes of *light petroleum R* so that the plate dips about 5 mm beneath the surface of the liquid. When the impregnation mixture has risen by at least 12 cm from the lower edge of the plate, remove the plate and allow the solvent to evaporate for 5 min. Carry out the chromatography in the same direction as the impregnation.

Preparation of the mixture of fatty acids. Heat 2 g of the oil with 30 mL of *0.5 M alcoholic potassium hydroxide* under a reflux condenser for 45 min. Add 50 mL of *water R*, allow to cool, transfer to a separating funnel and extract with three quantities, each of 50 mL, of *ether R*. Discard the ether extracts, acidify the aqueous layer with *hydrochloric acid R* and extract with three quantities, each of 50 mL, of *ether R*. Combine the ether extracts and wash with three quantities, each of 10 mL, of *water R*; discard the washings, dry the ether over *anhydrous sodium sulfate R* and filter. Evaporate the ether on a water-bath. Use the residue to prepare the test solution. The fatty acids may also be obtained from the soap solution prepared during the determination of the unsaponifiable matter.

Test solution. Dissolve 40 mg of the mixture of fatty acids obtained from the substance to be examined in 4 mL of *chloroform R*.

Reference solution. Dissolve 40 mg of the mixture of fatty acids obtained from a mixture of 19 volumes of *maize oil R* and 1 volume of *rapeseed oil R* in 4 mL of *chloroform R*.

Apply to the plate 3 µL of each solution. Develop over a path of 8 cm using a mixture of 10 volumes of *water R* and 90 volumes of *glacial acetic acid R*. Dry the plate at 110 °C for 10 min. Allow to cool and, unless otherwise prescribed, place the plate in a chromatographic chamber, with a tightly fitting lid, that has previously been saturated with iodine vapour by placing *iodine R* in an evaporating dish at the bottom of the chamber. After some time brown or yellowish-brown spots become visible. Remove the plate and allow to stand for a few minutes. When the brown background colour has disappeared, spray with *starch solution R*. Blue spots appear which may become brown on drying and again become blue after spraying with *water R*. The chromatogram obtained with the test solution always shows a spot with an R_F of about 0.5 (oleic acid) and a spot with an R_F of about 0.65 (linoleic acid) corresponding to the spots in the chromatogram obtained with the reference solution. With some oils a spot with an R_F of about 0.75 may be present (linolenic acid). By comparison with the spot in the chromatogram obtained with the reference solution, verify the absence in the chromatogram obtained with the test solution of a spot with an R_F of about 0.25 (erucic acid).

01/2008:20422
corrected 6.8

2.4.22. COMPOSITION OF FATTY ACIDS BY GAS CHROMATOGRAPHY

The test for foreign oils is carried out on the methyl esters of the fatty acids contained in the oil to be examined by gas chromatography (*2.2.28*).

METHOD A

This method is not applicable to oils that contain glycerides of fatty acids with an epoxy-, hydroepoxy-, hydroperoxy-, cyclopropyl or cyclopropenyl group, or those that contain a large proportion of fatty acids of chain length less than 8 carbon atoms or to oils with an acid value greater than 2.0.

Test solution. When prescribed in the monograph, dry the oil to be examined before the methylation step. Weigh 1.0 g of the oil into a 25 mL round-bottomed flask with a ground-glass neck fitted with a reflux condenser and a gas port into the flask. Add 10 mL of *anhydrous methanol R* and 0.2 mL of a 60 g/L solution of *potassium hydroxide R* in *methanol R*. Attach the reflux condenser, pass *nitrogen R* through the mixture at a rate of about 50 mL/min, shake and heat to boiling. When the solution is clear (usually after about 10 min), continue heating for a further 5 min. Cool the flask under running water and transfer the contents to a separating funnel. Rinse the flask with 5 mL of *heptane R* and transfer the rinsings to the separating funnel and shake. Add 10 mL of a 200 g/L solution of *sodium chloride R* and shake vigorously. Allow to separate and transfer the organic layer to a vial containing *anhydrous sodium sulfate R*. Allow to stand, then filter.

Reference solution (a). Prepare 0.50 g of the mixture of calibrating substances with the composition described in one of the 2.4.22 tables, as prescribed in the individual monograph (if the monograph does not mention a specific solution, use the composition described in Table 2.4.22.-1). Dissolve in *heptane R* and dilute to 50.0 mL with the same solvent.

Reference solution (b). Dilute 1.0 mL of reference solution (a) to 10.0 mL with *heptane R*.

Reference solution (c). Prepare 0.50 g of a mixture of fatty acid methyl esters that corresponds in composition to the mixture of fatty acids indicated in the monograph of the substance to be examined. Dissolve in *heptane R* and dilute to 50.0 mL with the same solvent. Commercially available mixtures of fatty acid methyl esters may also be used.

Column:

- *material*: fused silica, glass or quartz;
- *size*: *l* = 10-30 m, Ø = 0.2-0.8 mm;
- *stationary phase*: *macrogol 20 000 R* (film thickness 0.1-0.5 µm) or another suitable stationary phase.

Carrier gas: *helium for chromatography R* or *hydrogen for chromatography R*.

Flow rate: 1.3 mL/min (for a column Ø = 0.32 mm).

Split ratio: 1:100 or less, according to the internal diameter of the column used (1:50 when Ø = 0.32 mm).

Temperature:

- *column*: in isothermal conditions, 160-200 °C, according to the length and type of column used (200 °C for a column 30 m long and coated with a layer of *macrogol 20 000 R*); if a linear temperature programming is necessary, raise the temperature of the column at a rate of 3 °C/min from 170 °C to 230 °C, for example;
- *injection port*: 250 °C;
- *detector*: 250 °C.

Detection: flame ionisation.

Injection: 1 µL.

System suitability when using the mixture of calibrating substances in Table 2.4.22.-1 or Table 2.4.22.-3:

- *resolution*: minimum 1.8 between the peaks due to methyl oleate and methyl stearate in the chromatogram obtained with reference solution (a);
- *signal-to-noise ratio*: minimum 5 for the peak due to methyl myristate in the chromatogram obtained with reference solution (b);
- *number of theoretical plates*: minimum 30 000, calculated for the peak due to methyl stearate in the chromatogram obtained with reference solution (a).

System suitability when using the mixture of calibrating substances in Table 2.4.22.-2:

- *resolution*: minimum 4.0 between the peaks due to methyl caprylate and methyl caprate in the chromatogram obtained with reference solution (a);
- *signal-to-noise ratio*: minimum 5 for the peak due to methyl caproate in the chromatogram obtained with reference solution (b);
- *number of theoretical plates*: minimum 15 000, calculated for the peak due to methyl caprate in the chromatogram obtained with reference solution (a).

ASSESSMENT OF CHROMATOGRAMS

Avoid working conditions tending to give masked peaks (presence of constituents with small differences between retention times, for example linolenic acid and arachidic acid).

Qualitative analysis. Identify the peaks in the chromatogram obtained with reference solution (c) (isothermal operating conditions or linear temperature programming).

When using isothermal operating conditions, the peaks may also be identified by drawing calibration curves using the chromatogram obtained with reference solution (a) and the information given in Tables 2.4.22.-1, 2.4.22.-2 or 2.4.22.-3.

Table 2.4.22.-1. – *Mixture of calibrating substances (for gas chromatography with capillary column and split inlet system, it is recommended that the component with the longest chain length of the mixture to be examined be added to the calibration mixture, when the qualitative analysis is done using calibration curves)*

Mixture of the following substances	Composition (per cent *m/m*)
Methyl laurate R	5
Methyl myristate R	5
Methyl palmitate R	10
Methyl stearate R	20
Methyl arachidate R	40
Methyl oleate R	20

Table 2.4.22.-2. – *Mixture of calibrating substances (for gas chromatography with capillary column and split inlet system, it is recommended that the component with the longest chain length of the mixture to be examined be added to the calibration mixture, when the qualitative analysis is done using calibration curves)*

Mixture of the following substances	Composition (per cent *m/m*)
Methyl caproate R	10
Methyl caprylate R	10
Methyl decanoate R	20
Methyl laurate R	20
Methyl myristate R	40

Table 2.4.22.-3. – *Mixture of calibrating substances (for gas chromatography with capillary column and split inlet system, it is recommended that the component with the longest chain length of the mixture to be examined be added to the calibration mixture, when the qualitative analysis is done using calibration curves)*

Mixture of the following substances	Composition (per cent *m/m*)
Methyl myristate R	5
Methyl palmitate R	10
Methyl stearate R	15
Methyl arachidate R	20
Methyl oleate R	20
Methyl eicosenoate R	10
Methyl behenate R	10
Methyl lignocerate R	10

Measure the reduced retention time (t'_R) of each peak in the chromatogram obtained with reference solution (a). t'_R is the retention time measured from the solvent peak and not from the time of injection. Plot the straight line:

$$log_{10}\left(t'_R\right) = f\,(\text{equivalent chain length})$$

The logarithms of t'_R of unsaturated acids are situated on this line at points corresponding to non-integer values of carbon atoms known as 'equivalent chain lengths'; the equivalent chain length is the length of the theoretical saturated chain that would have the same t'_R as the fatty acid to be identified. For example, linoleic acid has the same t'_R as the theoretical saturated fatty acid having 18.8 carbon atoms.

Identify the peaks in the chromatogram obtained with the test solution by means of the straight line and the reduced retention times. Equivalent chain lengths are given in Table 2.4.22.-4.

Quantitative analysis. In general, the normalisation procedure is used in which the sum of the areas of the peaks in the chromatogram, except that of the solvent, is set at 100 per cent. The content of a constituent is calculated by determining the area of the corresponding peak as a percentage of the sum of the areas of all the peaks. Disregard any peak with an area less than 0.05 per cent of the total area.

In certain cases, for example in the presence of fatty acids with 12 or less carbon atoms, correction factors can be prescribed in the individual monograph to convert peak areas in per cent *m/m*.

Table 2.4.22.-4. – *Equivalent chain lengths (this value, which is to be calculated using calibration curves, is given as an example for a column of macrogol 20 000 R)*

Fatty acid	Equivalent chain length
Caproic acid	6.0
Caprylic acid	8.0
Capric acid	10.0
Lauric acid	12.0
Myristic acid	14.0
Palmitic acid	16.0
Palmitoleic acid	16.3
Margaric acid	17.0
Stearic acid	18.0
Oleic acid	18.3
Linoleic acid	18.8
Gamma-linolenic acid	19.0
Alpha-linolenic acid	19.2
Arachidic acid	20.0
Eicosenoic acid (gondoic acid)	20.2
Arachidonic acid	21.2
Behenic acid	22.0
Erucic acid	22.2
12-Oxostearic acid	22.7
Ricinoleic acid	23.9
12-Hydroxystearic acid	23.9
Lignoceric acid	24.0
Nervonic acid	24.2

METHOD B

This method is not applicable to oils that contain glycerides of fatty acids with an epoxy-, hydroepoxy-, hydroperoxy-, cyclopropyl or cyclopropenyl group or to oils with an acid value greater than 2.0.

Test solution. Introduce 0.100 g of the substance to be examined into a 10 mL centrifuge tube with a screw cap. Dissolve with 1 mL of *heptane R* and 1 mL of *dimethyl carbonate R* and mix vigorously under gentle heating (50-60 °C). Add, while still warm, 1 mL of a 12 g/L solution of *sodium R* in *anhydrous methanol R*, prepared with the necessary precautions, and mix vigorously for about 5 min. Add 3 mL of *distilled water R* and mix vigorously for about 30 s. Centrifuge for 15 min at 1500 *g*. Inject 1 µL of the organic phase.

Reference solutions and assessment of chromatograms. Where there is no specific prescription in the individual monograph, proceed as described under Method A.

Column:
- *material*: fused silica;
- *size*: *l* = 30 m, Ø = 0.25 mm;
- *stationary phase*: *macrogol 20 000 R* (film thickness 0.25 µm).

Carrier gas: *helium for chromatography R*.

Flow rate: 0.9 mL/min.

Split ratio: 1:100.

Temperature:

	Time (min)	Temperature (°C)
Column	0 - 15	100
	15 - 36	100 → 225
	36 - 61	225
Injection port		250
Detector		250

Detection: flame ionisation.

Injection: 1 µL.

METHOD C

This method is not applicable to oils that contain glycerides of fatty acids with epoxy-, hydroepoxy-, hydroperoxy-, aldehyde, ketone, cyclopropyl and cyclopropenyl groups, and conjugated polyunsaturated and acetylenic compounds because of partial or complete destruction of these groups.

Test solution. Dissolve 0.10 g of the substance to be examined in 2 mL of a 20 g/L solution of *sodium hydroxide R* in *methanol R* in a 25 mL conical flask and boil under a reflux condenser for 30 min. Add 2.0 mL of *boron trifluoride-methanol solution R* through the condenser and

boil for 30 min. Add 4 mL of *heptane R* through the condenser and boil for 5 min. Cool and add 10.0 mL of *saturated sodium chloride solution R*, shake for about 15 s and add a quantity of *saturated sodium chloride solution R* such that the upper phase is brought into the neck of the flask. Collect 2 mL of the upper phase, wash with 3 quantities, each of 2 mL, of *water R* and dry over *anhydrous sodium sulfate R*.

Reference solutions, chromatographic procedure and assessment of chromatograms. Where there is no specific prescription in the individual monograph, proceed as described under Method A.

07/2011:20423

2.4.23. STEROLS IN FATTY OILS

When the monograph does not specify the method to be used, method A is applied. Any change from method A to method B must be validated.

METHOD A

Separation of the sterol fraction (TLC)

Prepare the unsaponifiable matter and then isolate the sterol fraction of the fatty oil by thin-layer chromatography (*2.2.27*), using a *TLC silica gel plate R* with a 0.2 mm to 0.5 mm layer.

Test solution (a). In a 150 mL flask fitted with a reflux condenser, place a volume of a 2 g/L solution of *betulin R* in *methylene chloride R* containing betulin corresponding to about 10 per cent of the sterol content of the sample used for the determination (e.g. in the case of olive oil add 500 µL, in the case of other vegetable oils add 1500 µL of the betulin solution). If the monograph requires the percentage content of the individual sterols in the sterol fraction, the addition of betulin may be omitted. Evaporate to dryness under a current of *nitrogen R*. Add 5.00 g (*m*) of the substance to be examined. Add 50 mL of *2 M alcoholic potassium hydroxide R* and heat on a water-bath for 1 h, swirling frequently. Cool to a temperature below 25 °C and transfer the contents of the flask to a separating funnel with 100 mL of *water R*. Shake the liquid carefully with 3 quantities, each of 100 mL, of *peroxide-free ether R*. Combine the ether layers in another separating funnel containing 40 mL of *water R*, shake gently for a few minutes, allow to separate and reject the aqueous phase. Wash the ether phase with several quantities, each of 40 mL, of *water R*, until the aqueous phase is no longer alkaline to phenolphthalein. Transfer the ether phase to a tared flask, washing the separating funnel with *peroxide-free ether R*. Distil off the ether with suitable precautions and add 6 mL of *acetone R* to the residue. Carefully remove the solvent in a current of *nitrogen R*. Dry to constant mass at 100-105 °C. Allow to cool in a desiccator and weigh. Transfer the residue to a small test tube with *methylene chloride R*. Evaporate under a stream of *nitrogen R* to a volume of about 1 mL. Depending on the unsaponifiable content of the oil, adapt the final concentration of the solution to 25-50 mg/mL.

Test solution (b). Treat 5.00 g of *rapeseed oil R* as prescribed for the substance to be examined, beginning at the words "Add 50 mL of *2 M alcoholic potassium hydroxide R*".

Test solution (c). Treat 5.00 g of *sunflower oil R* as prescribed for the substance to be examined, beginning at the words "Add 50 mL of *2 M alcoholic potassium hydroxide R*".

Reference solution. Dissolve 25 mg of *cholesterol R* and 10 mg of *betulin R* in 1 mL of *methylene chloride R*.

Use a separate plate for each test solution. Apply as a band of 10 mm, at 20 mm from the base and 10 mm from the left edge, 10 µL of the reference solution and as bands of 150 mm, at 20 mm from the base, 0.5 mL of test solutions (a), (b) or (c). Develop over a path of 17 cm using a mixture of 35 volumes of *ether R* and 65 volumes of *hexane R*. Dry the plates in a current of *nitrogen R*. Spray the plates with a 2 g/L solution of *dichlorofluorescein R* in *anhydrous ethanol R* and examine in ultraviolet light at 254 nm. The chromatogram obtained with the reference solution shows bands due to cholesterol and betulin. The chromatograms obtained with the test solutions show bands with similar R_F values due to sterols. From each of the chromatograms, remove an area of coating corresponding to the area occupied by the sterol bands and additionally the area of the zones 2-3 mm above and below the visible zones corresponding to the reference solution. Place separately in three 50 mL flasks. To each flask add 15 mL of *methylene chloride R* and heat under reflux with stirring, for 15 min. Filter each solution through a sintered-glass filter (40) (*2.1.2*) or suitable filter paper and wash each filter with 3 quantities, each of 15 mL, of *methylene chloride R*. Place the combined filtrate and washings from each filter separately in 3 flasks, evaporate under a stream of *nitrogen R* to 5-10 mL. Transfer to a small test tube and evaporate to dryness under a stream of *nitrogen R*.

Determination of the sterols (GC)

Gas chromatography (*2.2.28*). *Carry out the operations protected from humidity and prepare the solutions immediately before use.*

Test solution. To the sterols separated from the substance to be examined by thin-layer chromatography add a freshly prepared mixture of 0.04 mL of *chlorotrimethylsilane R*, 0.1 mL of *hexamethyldisilazane R* and 0.5 mL of *anhydrous pyridine R*. Allow to stand for at least 5 min and use the liquid phase.

Reference solution (a). To 9 parts of the sterols separated from *rapeseed oil R* by thin-layer chromatography add 1 part of *cholesterol R*. To the mixture add a freshly prepared mixture of 0.04 mL of *chlorotrimethylsilane R*, 0.1 mL of *hexamethyldisilazane R* and 0.5 mL of *anhydrous pyridine R*. Allow to stand for at least 5 min and use the liquid phase.

Reference solution (b). To the sterols separated from *sunflower oil R* by thin-layer chromatography add a freshly prepared mixture of 0.04 mL of *chlorotrimethylsilane R*, 0.1 mL of *hexamethyldisilazane R* and 0.5 mL of *anhydrous pyridine R*. Allow to stand for at least 5 min and use the liquid phase.

Column:

- *material*: fused silica;
- *size*: *l* = 20-30 m, Ø = 0.25-0.32 mm;
- *stationary phase*: *poly[methyl(95)phenyl(5)]siloxane R* or *poly(cyanopropyl)(7)(phenyl)(7)(methyl)(86)siloxane R* (film thickness 0.25 µm).

Carrier gas: *hydrogen for chromatography R* or *helium for chromatography R*.

Linear velocity: 30-50 cm/s (hydrogen) or 20-35 cm/s (helium).

Split ratio: 1:50 (hydrogen) or 1:100 (helium).

Temperature:

- *column*: 260 °C;
- *injection port*: 280 °C;
- *detector*: 290 °C.

Detection: flame ionisation.

Injection: 1 µL.

Identification of peaks: the chromatogram obtained with reference solution (a) shows 4 principal peaks corresponding to cholesterol, brassicasterol, campesterol and β-sitosterol and the chromatogram obtained with reference solution (b) shows 4 principal peaks corresponding to campesterol, stigmasterol, β-sitosterol and Δ7-stigmastenol. The relative retentions of the sterols with reference to β-sitosterol (main peak) are given in Table 2.4.23.-1.

Table 2.4.23.-1. – *Relative retentions of sterols with reference to β-sitosterol for 2 different columns*

	Poly(cyanopropyl)(7)-(phenyl)(7)-(methyl)(86)siloxane	Poly[methyl(95)-phenyl(5)]siloxane
Cholesterol	0.64	0.63
Brassicasterol	0.70	0.71
24-Methylenecholesterol	0.79	0.80
Campesterol	0.82	0.81
Campestanol	0.83	0.82
Stigmasterol	0.87	0.87
Δ7-Campesterol	0.93	0.92
Δ5,23-Stigmastadienol	0.95	0.95
Clerosterol	0.96	0.96
β-Sitosterol	1	1
Sitostanol	1.01	1.02
Δ5-Avenasterol	1.03	1.03
Δ5,24-Stigmastadienol	1.09	1.08
Δ7-Stigmastenol(1)	1.13	1.12
Δ7-Avenasterol	1.18	1.16
Betulin	1.4	1.4

(1) This sterol may also be referred to as Δ7-stigmasterol in literature.

The peak due to the internal standard (betulin) must be clearly separated from the peaks due to the sterols to be determined.

For the chromatogram obtained with the test solution, identify the peaks and calculate the percentage content of each sterol in the sterol fraction of the substance to be examined using the following expression:

$$\frac{A}{S} \times 100$$

A = area of the peak due to the component to be determined;

S = sum of the areas of the peaks due to the components indicated in Table 2.4.23.-1; disregard the peak due to betulin.

If required in the monograph, calculate the content of each sterol in milligrams per 100 grams of the substance to be examined using the following expression:

$$\frac{A \times m' \times 100}{A' \times m}$$

A = area of the peak due to the component to be determined;

A' = area of the peak due to betulin;

m = mass of the sample of the substance to be examined, in grams;

m' = mass of *betulin R* added, in milligrams.

METHOD B

Preparation of the unsaponifiable matter

Prepare the unsaponifiable matter according to the method stated in the test for unsaponifiable matter of the monograph on the substance to be examined. Failing this, prepare the unsaponifiable matter according to the method described in chapter *2.5.7. Unsaponifiable matter*. After the final neutralisation step, evaporate the ethanol, then add 6 mL of *acetone R* and evaporate the solvent. Dry the residue at 100-105 °C. It is not necessary to dry to constant mass.

Simultaneously prepare under the same conditions the unsaponifiable matter of *sunflower oil R*. This will in particular serve to locate the sterol fraction to be collected.

Separation of the sterol fraction (LC)

Liquid chromatography (*2.2.29*).

Test solution. Take up the residue with 3 quantities, each of 4 mL, of the solvent used during the preparation of the unsaponifiable matter (generally *ether R* or *light petroleum R*) and transfer to a 15 mL tube. Evaporate to dryness under a current of *nitrogen R*. Dissolve the residue in a volume of mobile phase sufficient to obtain a solution with an approximate concentration of 40 mg/mL. Add a few drops of *2-propanol R1* to improve the solubility (3 drops are normally sufficient to ensure complete solubilisation). Filter through a membrane filter (nominal pore size 0.45 µm).

Reference solution. Proceed as described for the test solution with the unsaponifiable matter obtained with *sunflower oil R*.

Precolumn:

- *size*: *l* = 5 mm, Ø = 4.6 mm;
- *stationary phase*: *silica gel for chromatography R* (5 µm) with a pore size of 6 nm.

Column:

- *size*: *l* = 0.25 m, Ø = 4.6 mm;
- *stationary phase*: *silica gel for chromatography R* (5 µm) with a pore size of 6 nm.

Mobile phase: *2-propanol R1*, *hexane R* (1:99 *V/V*).

Flow rate: 1 mL/min.

Detection: spectrophotometer at 210 nm.

Injection: 50 µL.

Identification of the peaks due to sterols: the sterol fraction elutes at the end of the chromatogram. Locate the fraction to be collected using the chromatogram obtained with the reference solution, which shows 2 principal peaks eluting approximately between 23 min and 32 min. Collect the fraction at the detector outlet in a 15 mL tube with a screw cap. Evaporate the solvent under a current of *nitrogen R*.

Determination of the sterols (GC)

Gas chromatography (*2.2.28*).

Test solution. Dissolve the residue of the sterol fraction obtained with the test solution in the previous LC step in 0.2 mL of *anhydrous pyridine R* and 0.2 mL of a mixture of 1 volume of *chlorotrimethylsilane R* and 99 volumes of *N,O-bis(trimethylsilyl)trifluoroacetamide R*. Stopper the tube tightly and heat at 80 °C for 20 min. Allow to cool and use the liquid phase.

Reference solution. Dissolve the residue of the sterol fraction obtained with the reference solution in the previous LC step in 0.2 mL of *anhydrous pyridine R* and 0.2 mL of a mixture of 1 volume of *chlorotrimethylsilane R* and 99 volumes of *N,O-bis(trimethylsilyl)trifluoroacetamide R*. Stopper the tube tightly and heat at 80 °C for 20 min. Allow to cool and use the liquid phase.

A standard of cholesterol (*cholesterol R*) may also be used, alone or as a mixture with the sterol fraction of sunflower oil. Proceed with derivatisation as described for the test solution.

Column:

- *material*: fused silica;
- *size*: *l* = 30 m, Ø = 0.25 mm;
- *stationary phase*: *poly[methyl(95)phenyl(5)]siloxane R* (film thickness 0.25 µm).

Carrier gas: *helium for chromatography R*.

Flow rate: 2.6 mL/min.

Split ratio: 1:25.

Temperature:

	Time (min)	Temperature (°C)
Column	0 – 38	260
	38 – 44	260 →290
	44 - 49	290
Injection port		290
Detector		290

Detection: flame ionisation.

Injection: 1-3 µL (depending on the expected amount of sterols in the substance to be examined).

Identification of peaks: use the chromatogram obtained with the reference solution to identify the peaks due to campesterol, stigmasterol, β-sitosterol and Δ7-stigmastenol. Identify the peaks due to the sterols in the chromatogram obtained with the test solution using the chromatogram obtained with the reference solution and the relative retentions with reference to β-sitosterol (main peak) given in Table 2.4.23.-1.

System suitability: reference solution:

– *resolution*: minimum 4.0 between the peaks due to campesterol and stigmasterol.

Calculate the percentage content of each sterol in the sterol fraction of the substance to be examined using the following expression:

$$\frac{A}{S} \times 100$$

A = area of the peak due to the component to be determined;

S = sum of the areas of the peaks due to the components indicated in Table 2.4.23.-1, except betulin.

01/2008:20424
corrected 7.2

2.4.24. IDENTIFICATION AND CONTROL OF RESIDUAL SOLVENTS

The test procedures described in this general method may be used:

i. for the identification of the majority of Class 1 and Class 2 residual solvents in an active substance, excipient or medicinal product when the residual solvents are unknown;

ii. as a limit test for Class 1 and Class 2 solvents when present in an active substance, excipient or medicinal product;

iii. for the quantification of Class 2 solvents when the limits are greater than 1000 ppm (0.1 per cent) or for the quantification of Class 3 solvents when required.

Class 1, Class 2 and Class 3 residual solvents are listed in general chapter *5.4. Residual solvents*.

Three diluents are described for sample preparation and the conditions to be applied for head-space injection of the gaseous sample onto the chromatographic system. Two chromatographic systems are prescribed but System A is preferred whilst System B is employed normally for confirmation of identity. The choice of sample preparation procedure depends on the solubility of the substance to be examined and in certain cases the residual solvents to be controlled.

The following residual solvents are not readily detected by the head-space injection conditions described: formamide, 2-ethoxyethanol, 2-methoxyethanol, ethylene glycol, *N*-methylpyrrolidone and sulfolane. Other appropriate procedures should be employed for the control of these residual solvents.

When the test procedure is applied quantitatively to control residual solvents in a substance, then it must be validated.

PROCEDURE

Examine by gas chromatography with static head-space injection (*2.2.28*).

Sample preparation 1. This is intended for the control of residual solvents in water-soluble substances.

Sample solution (1). Dissolve 0.200 g of the substance to be examined in *water R* and dilute to 20.0 mL with the same solvent.

Sample preparation 2. This is intended for the control of residual solvents in water-insoluble substances.

Sample solution (2). Dissolve 0.200 g of the substance to be examined in *dimethylformamide R* (DMF) and dilute to 20.0 mL with the same solvent.

Sample preparation 3. This is intended for the control of *N,N*-dimethylacetamide and/or *N,N*-dimethylformamide, when it is known or suspected that one or both of these substances are present in the substance to be examined.

Sample solution (3). Dissolve 0.200 g of the substance to be examined in *1,3-dimethyl-2-imidazolidinone R* (DMI) and dilute to 20.0 mL with the same solvent.

In some cases none of the above sample preparation procedures are appropriate, in which case the diluent to be used for the preparation of the sample solution and the static head-space conditions to be employed must be demonstrated to be suitable.

Solvent solution (a). To 1.0 mL of *Class 1 residual solvent solution CRS*, add 9 mL of *dimethyl sulfoxide R* and dilute to 100.0 mL with *water R*. Dilute 1.0 mL of this solution to 100 mL with *water R*. Dilute 1.0 mL of this solution to 10.0 mL with *water R*.

The reference solutions correspond to the following limits:

– benzene: 2 ppm,
– carbon tetrachloride: 4 ppm,
– 1,2-dichloroethane: 5 ppm,
– 1,1-dichloroethene: 8 ppm,
– 1,1,1-trichloroethane: 10 ppm.

Solvent solution (b). Dissolve appropriate quantities of the Class 2 residual solvents in *dimethyl sulfoxide R* and dilute to 100.0 mL with *water R*. Dilute to give a concentration of 1/20 of the limits stated in Table 2 (see *5.4. Residual solvents*).

Solvent solution (c). Dissolve 1.00 g of the solvent or solvents present in the substance to be examined in *dimethyl sulfoxide R* or *water R*, if appropriate, and dilute to 100.0 mL with *water R*. Dilute to give a concentration of 1/20 of the limit(s) stated in Table 1 or 2 (see *5.4. Residual solvents*).

Blank solution. Prepare as described for solvent solution (c) but without the addition of solvent(s) (used to verify the absence of interfering peaks).

Test solution. Introduce 5.0 mL of the sample solution and 1.0 mL of the blank solution into an injection vial.

Reference solution (a) (Class 1). Introduce 1.0 mL of solvent solution (a) and 5.0 mL of the appropriate diluent into an injection vial.

Reference solution (a_1) (Class 1). Introduce 5.0 mL of the sample solution and 1.0 mL of solvent solution (a) into an injection vial.

Reference solution (b) (Class 2). Introduce 1.0 mL of solvent solution (b) and 5.0 mL of the appropriate diluent into an injection vial.

Reference solution (c). Introduce 5.0 mL of the sample solution and 1.0 mL of solvent solution (c) into an injection vial.

Reference solution (d). Introduce 1.0 mL of the blank solution and 5.0 mL of the appropriate diluent into an injection vial.

Close the vials with a tight rubber membrane stopper coated with polytetrafluoroethylene and secure with an aluminium crimped cap. Shake to obtain a homogeneous solution.

The following static head-space injection conditions may be used:

Operating parameters	Sample preparation procedure 1	2	3
Equilibration temperature (°C)	80	105	80
Equilibration time (min)	60	45	45
Transfer-line temperature (°C)	85	110	105
Carrier gas: *Nitrogen for chromatography R* or *Helium for chromatography R* at an appropriate pressure			
Pressurisation time (s)	30	30	30
Injection volume (mL)	1	1	1

The chromatographic procedure may be carried out using:

SYSTEM A

- a fused-silica capillary or wide-bore column 30 m long and 0.32 mm or 0.53 mm in internal diameter coated with cross-linked 6 per cent polycyanopropylphenylsiloxane and 94 per cent polydimethylsiloxane (film thickness: 1.8 µm or 3 µm),
- *nitrogen for chromatography R* or *helium for chromatography R* as the carrier gas, split ratio 1:5 with a linear velocity of about 35 cm/s,
- a flame-ionisation detector (a mass spectrometer may also be used or an electron-capture detector for the chlorinated residual solvents of Class 1),

maintaining the temperature of the column at 40 °C for 20 min, then raising the temperature at a rate of 10 °C per min to 240 °C and maintaining it at 240 °C for 20 min and maintaining the temperature of the injection port at 140 °C and that of the detector at 250 °C, or, where there is interference from the matrix, use:

SYSTEM B

- a fused-silica capillary or wide-bore column 30 m long and 0.32 mm or 0.53 mm in internal diameter coated with *macrogol 20 000 R* (film thickness: 0.25 µm),
- *nitrogen for chromatography R* or *helium for chromatography R* as the carrier gas, split ratio 1:5 with a linear velocity of about 35 cm/s.
- a flame-ionisation detector (a mass spectrophotometer may also be used or an electron-capture detector for the chlorinated residual solvents of Class 1),

maintaining the temperature of the column at 50 °C for 20 min, then raising the temperature at a rate of 6 °C per min to 165 °C and maintaining it at 165 °C for 20 min and maintaining the temperature of the injection port at 140 °C and that of the detector at 250 °C.

Inject 1 mL of the gaseous phase of reference solution (a) onto the column described in System A and record the chromatogram under such conditions that the signal-to-noise ratio for 1,1,1-trichloroethane can be measured. The signal-to-noise ratio must be at least 5. A typical chromatogram is shown in Figure 2.4.24.-1.

Inject 1 mL of the gaseous phase of reference solution (a_1) onto the column described in System A. The peaks due to the Class 1 residual solvents are still detectable.

Inject 1 mL of the gaseous phase of reference solution (b) onto the column described in System A and record the chromatogram under such conditions that the resolution between acetonitrile and methylene chloride can be determined. The system is suitable if the chromatogram obtained resembles the chromatogram shown in Figure 2.4.24.-2 and the resolution between acetonitrile and methylene chloride is at least 1.0.

Inject 1 mL of the gaseous phase of the test solution onto the column described in System A. If in the chromatogram obtained, there is no peak which corresponds to one of the residual solvent peaks in the chromatograms obtained with reference solution (a) or (b), then the substance to be examined meets the requirements of the test. If any peak in the chromatogram obtained with the test solution corresponds to any of the residual solvent peaks obtained with reference solution (a) or (b) then System B is to be employed.

Inject 1 mL of the gaseous phase of reference solution (a) onto the column described in System B and record the chromatogram under such conditions that the signal-to-noise ratio for benzene can be measured. The signal-to-noise ratio must be at least 5. A typical chromatogram is shown in Figure 2.4.24.-3.

Inject 1 mL of the gaseous phase of reference solution (a_1) onto the column described in System B. The peaks due to the Class I residual solvents are still detectable.

Inject 1 mL of the gaseous phase of reference solution (b) onto the column described in System B and record the chromatogram under such conditions that the resolution between acetonitrile and trichloroethene can be determined. The system is suitable if the chromatogram obtained resembles the chromatogram shown in Figure 2.4.24.-4 and the resolution between acetonitrile and trichloroethene is at least 1.0.

Inject 1 mL of the gaseous phase of the test solution onto the column described in System B. If in the chromatogram obtained, there is no peak which corresponds to any of the residual solvent peaks in the chromatogram obtained with the reference solution (a) or (b), then the substance to be examined meets the requirements of the test. If any peak in the chromatogram obtained with the test solution corresponds to any of the residual solvent peaks obtained with reference solution (a) or (b) and confirms the correspondence obtained when using System A, then proceed as follows.

Inject 1 mL of the gaseous phase of reference solution (c) onto the column described for System A or System B. If necessary, adjust the sensitivity of the system so that the height of the peak corresponding to the identified residual solvent(s) is at least 50 per cent of the full scale of the recorder.

Inject 1 mL of the gaseous phase of reference solution (d) onto the column. No interfering peaks should be observed.

Inject 1 mL of the gaseous phase of the test solution and 1 mL of the gaseous phase of reference solution (c) on to the column. Repeat these injections twice more.

The mean area of the peak of the residual solvent(s) in the chromatograms obtained with the test solution is not greater than half the mean area of the peak of the corresponding residual solvent(s) in the chromatograms obtained with reference solution (c). The test is not valid unless the relative standard deviation of the differences in areas between the analyte peaks obtained from 3 replicate paired injections of reference solution (c) and the test solution, is at most 15 per cent.

A flow diagram of the procedure is shown in Figure 2.4.24.-5.

When a residual solvent (Class 2 or Class 3) is present at a level of 0.1 per cent or greater then the content may be quantitatively determined by the method of standard additions.

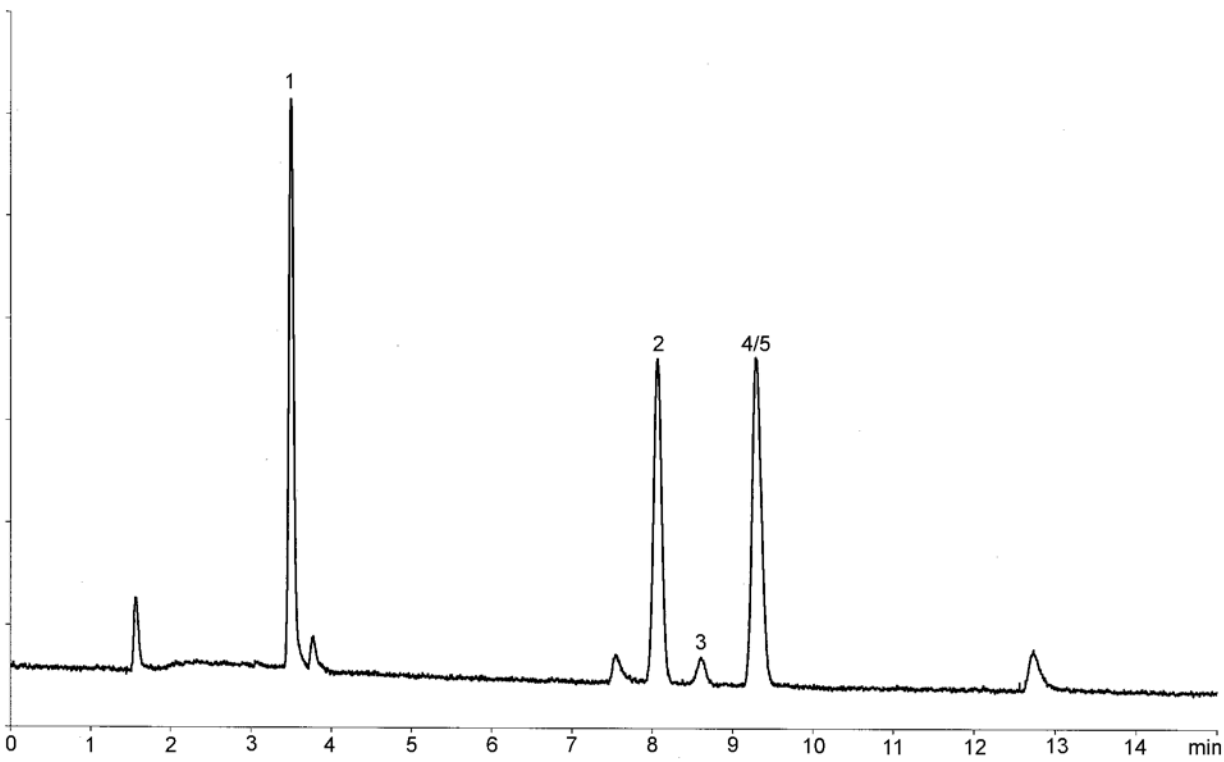

1. 1,1-dichloroethene 2. 1,1,1-trichloroethane 3. carbon tetrachloride 4. benzene 5. 1,2-dichloroethane

Figure 2.4.24.-1. – *Typical chromatogram of class 1 solvents using the conditions described for System A and Procedure 1. Flame-ionisation detector.*

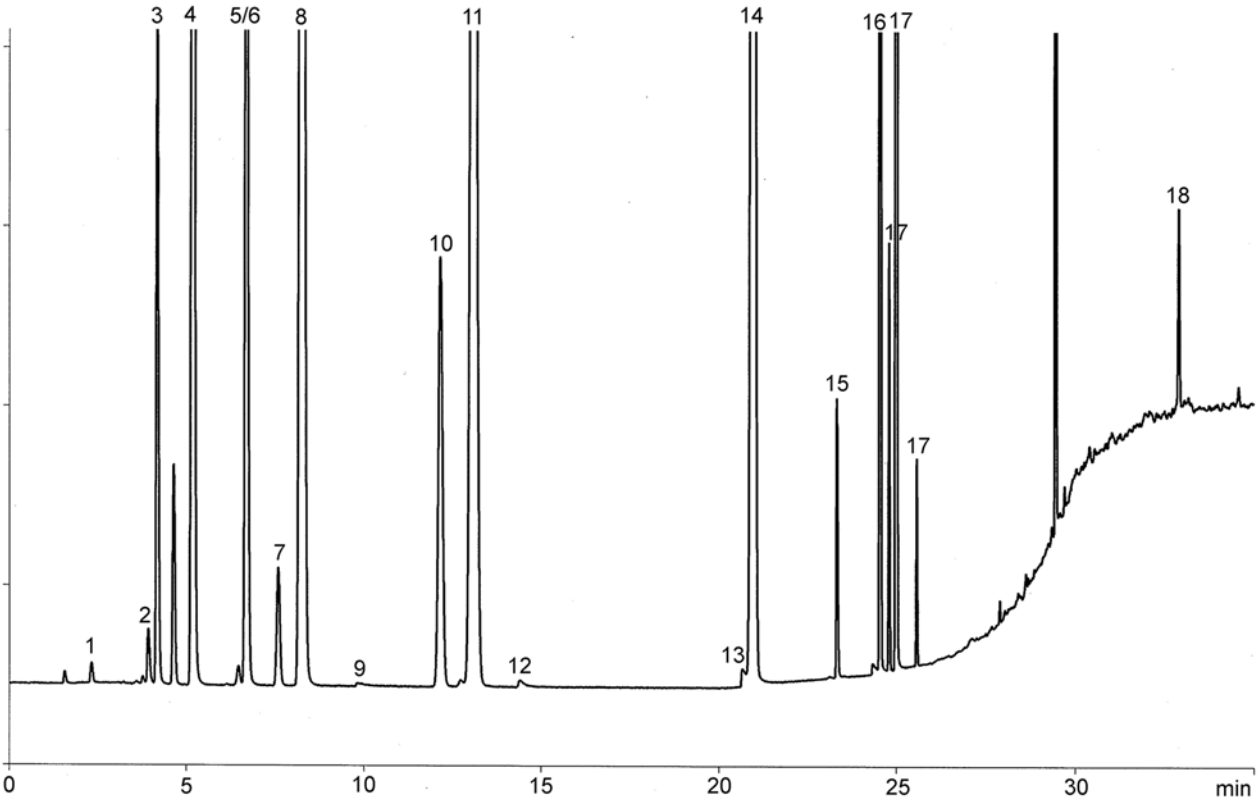

1. methanol	5. *cis*-1,2-dichloroethene	9. 1,2-dimethoxyethane	13. pyridine	16. chlorobenzene
2. acetonitrile	6. nitromethane	10. 1,1,2-trichloroethene	14. toluene	17. xylene *ortho, meta, para*
3. dichloromethane	7. chloroform	11. methylcyclohexane	15. 2-hexanone	18. tetralin
4. hexane	8. cyclohexane	12. 1,4-dioxan		

Figure 2.4.24.-2. – *Chromatogram of Class 2 solvents using the conditions described for System A and Procedure 1. Flame-ionisation detector.*

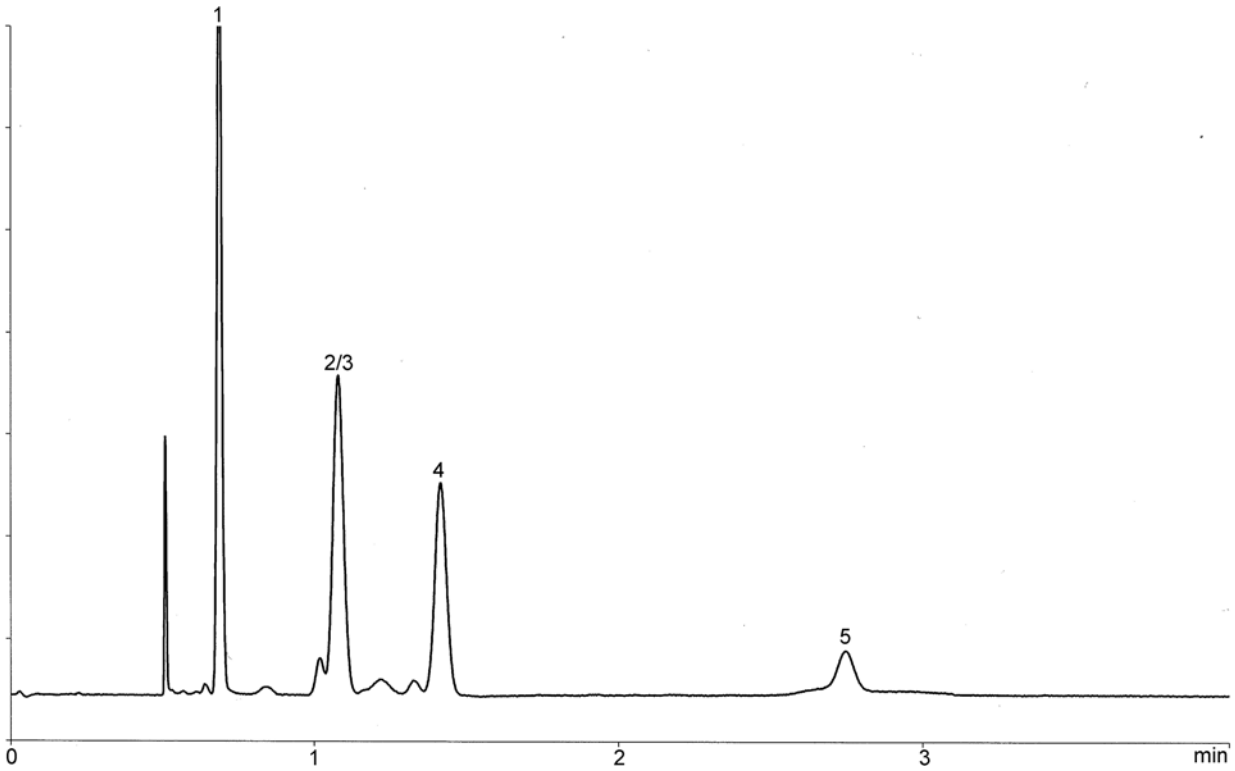

1. 1,1-dichloroethene 2. 1,1,1-trichloroethane 3. carbon tetrachloride 4. benzene 5. 1,2-dichloroethane

Figure 2.4.24.-3. – *Chromatogram of Class 1 residual solvents using the conditions described for System B and Procedure 1. Flame-ionisation detector.*

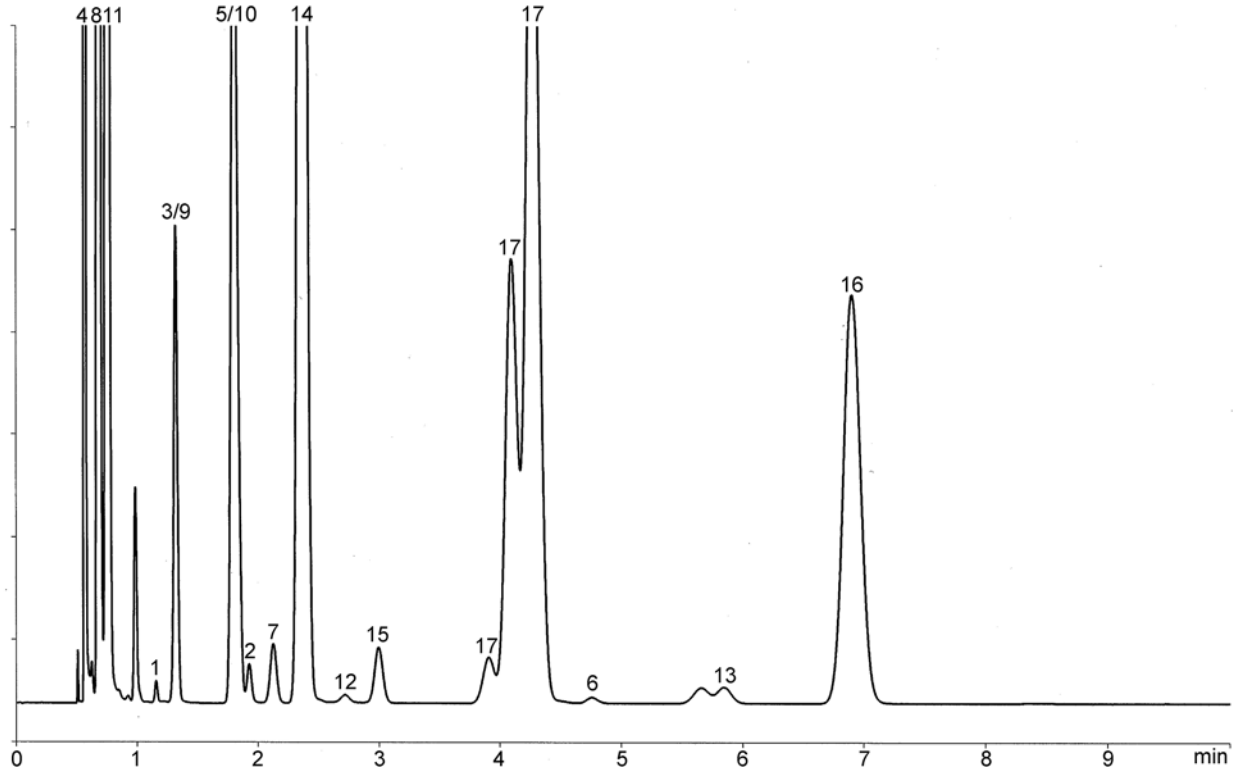

1. methanol	5. *cis*-1,2-dichloroethene	9. 1,2-dimethoxyethane	13. pyridine	16. chlorobenzene
2. acetonitrile	6. nitromethane	10. 1,1,2-trichloroethene	14. toluene	17. xylene *ortho, meta, para*
3. dichloromethane	7. chloroform	11. methylcyclohexane	15. 2-hexanone	18. tetralin (t_R = 28 min)
4. hexane	8. cyclohexane	12. 1,4-dioxan		

Figure 2.4.24.-4. – *Typical chromatogram of class 2 residual solvents using the conditions described for System B and Procedure 1. Flame-ionisation detector.*

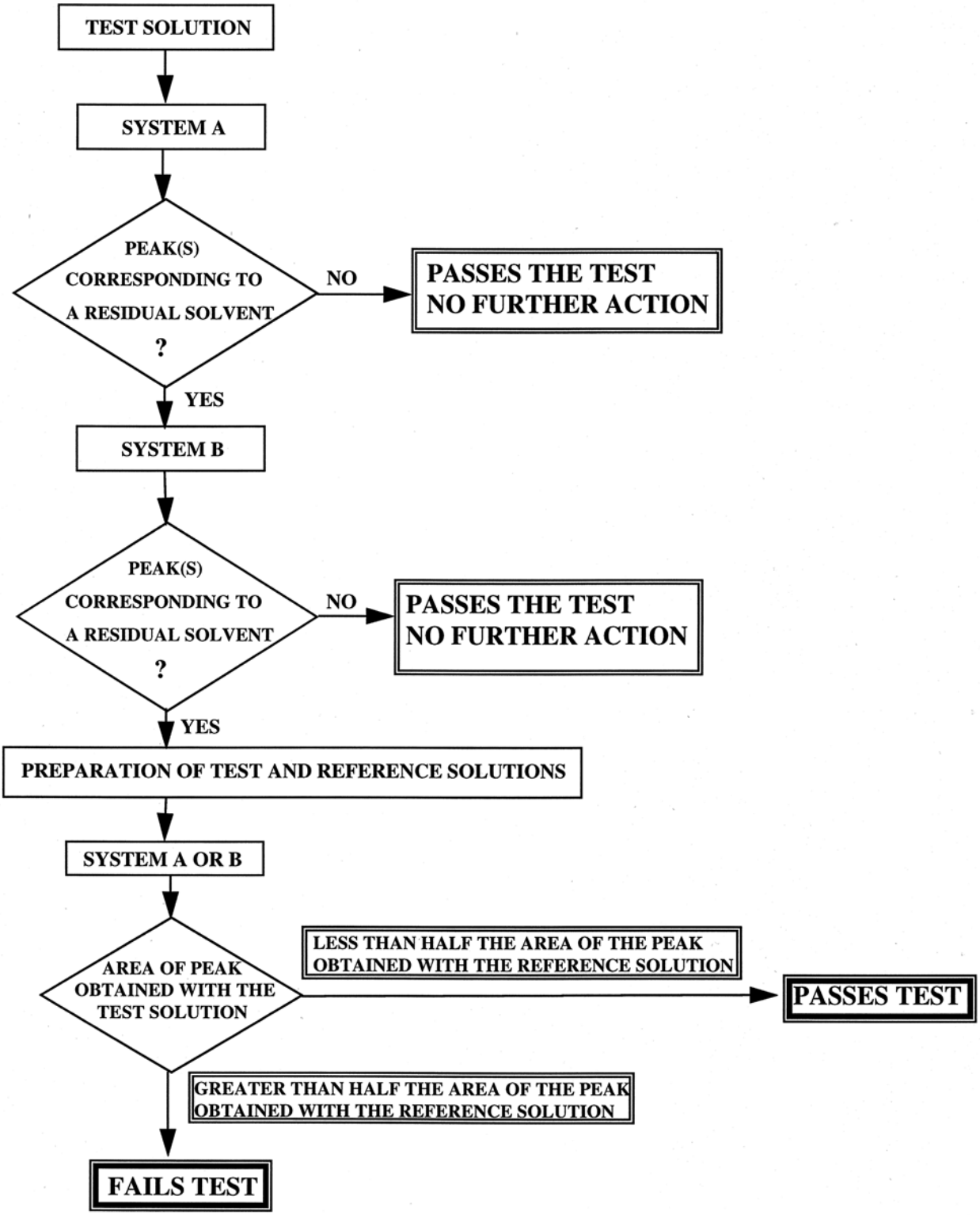

Figure 2.4.24.-5. – *Diagram relating to the identification of residual solvents and the application of limit tests*

2.4.25. ETHYLENE OXIDE AND DIOXAN

01/2014:20425

The test is intended for the determination of residual ethylene oxide and dioxan in samples soluble in water or dimethylacetamide. For substances that are insoluble or insufficiently soluble in these solvents, the preparation of the sample solution and the head-space conditions to be employed are given in the individual monograph.

Head-space gas chromatography (*2.2.28*).

A. For samples soluble in or miscible with water, the following procedure may be used.

Test solution. Weigh 1.00 g (M_T) of the substance to be examined in a 10 mL vial (other sizes may be used depending on the operating conditions) and add 1.0 mL of *water R*. Close and mix to obtain a homogeneous solution. Allow to stand at 70 °C for 45 min.

Reference solution (a). Weigh 1.00 g (M_R) of the substance to be examined into an identical 10 mL vial, add 0.10 mL of *dioxan solution R1* and 0.50 mL of *ethylene oxide solution R3*. Close and mix to obtain a homogeneous solution. Allow to stand at 70 °C for 45 min.

Reference solution (b). To 0.50 mL of *ethylene oxide solution R3* in a 10 mL vial add 0.1 mL of a freshly prepared 10 mg/L solution of *acetaldehyde R* and 0.10 mL of *dioxan solution R1*. Close and mix to obtain a homogeneous solution. Allow to stand at 70 °C for 45 min.

B. For samples soluble in or miscible with dimethylacetamide, the following procedure may be used.

Test solution. Weigh 1.00 g (M_T) of the substance to be examined in a 10 mL vial (other sizes may be used depending on the operating conditions) and add 0.20 mL of *water R* and 1.0 mL of *dimethylacetamide R*. Close and mix to obtain a homogeneous solution. Allow to stand at 90 °C for 45 min.

Reference solution (a). Weigh 1.00 g (M_R) of the substance to be examined into an identical 10 mL vial, add 0.10 mL of *dioxan solution R1*, 0.10 mL of *ethylene oxide solution R2* and 1.0 mL of *dimethylacetamide R*. Close and mix to obtain a homogeneous solution. Allow to stand at 90 °C for 45 min.

Reference solution (b). To 0.10 mL of *ethylene oxide solution R2* in a 10 mL vial, add 0.1 mL of a freshly prepared 10 mg/L solution of *acetaldehyde R* and 0.10 mL of *dioxan solution R1*. Close and mix to obtain a homogeneous solution. Allow to stand at 70 °C for 45 min.

Column:
- *material*: glass or fused silica;
- *size*: *l* = 30 m, Ø = 0.32 mm;
- *stationary phase*: *poly(dimethyl)siloxane R* (film thickness 1.0 µm).

Carrier gas: *helium for chromatography R* or *nitrogen for chromatography R*.

Linear velocity: 20 cm/s.

Split ratio: 1:20.

Static head-space conditions that may be used:
- *equilibration temperature*: 70 °C (90 °C for solutions in dimethylacetamide);
- *equilibration time*: 45 min;
- *transfer-line temperature*: 75 °C (150 °C for solutions in dimethylacetamide);
- *carrier gas*: *helium for chromatography R*;
- *pressurisation time*: 1 min;
- *injection time*: 12 s.

Temperature:

	Time (min)	Temperature (°C)
Column	0 - 5	50
	5 - 31	50 → 180
	31 - 32.5	180 → 230
	32.5 - 37.5	230
Injection port		150
Detector		250

Detection: flame ionisation.

Injection: a suitable volume, for example 1.0 mL, of the gaseous phase of the test solution and of reference solutions (a) and (b). Repeat the procedure twice more.

System suitability: reference solution (b):
- *resolution*: minimum 2.0 between the peaks due to acetaldehyde and ethylene oxide;
- *signal-to-noise ratio*: minimum 5 for the peaks due to ethylene oxide and dioxan.

Verification of precision

For each pair of injections, calculate for ethylene oxide and for dioxan the difference in area between the peaks obtained with the test solution and reference solution (a). The test is not valid unless the relative standard deviation of the 3 values obtained for ethylene oxide is not greater than 15 per cent and the relative standard deviation of the 3 values obtained for dioxan is not greater than 15 per cent. If the weighings used for the test solution and reference solution (a) differ from 1.00 g by more than 0.5 per cent, the appropriate corrections must be made.

Calculate the content of ethylene oxide or dioxan in parts per million from the following expressions:

$$\frac{A_T \times C}{(A_R \times M_T) - (A_T \times M_R)}$$

A_T = area of the peak due to ethylene oxide in the chromatogram obtained with the test solution;

A_R = area of the peak due to ethylene oxide in the chromatogram obtained with reference solution (a);

M_T = mass of the substance to be examined in the test solution, in grams;

M_R = mass of the substance to be examined in reference solution (a), in grams;

C = amount of ethylene oxide added to reference solution (a), in micrograms.

$$\frac{D_T \times C}{(D_R \times M_T) - (D_T \times M_R)}$$

D_T = area of the peak due to dioxan in the chromatogram obtained with the test solution;

D_R = area of the peak due to dioxan in the chromatogram obtained with reference solution (a);

C = amount of dioxan added to reference solution (a) in micrograms.

01/2008:20426

2.4.26. *N,N*-DIMETHYLANILINE

METHOD A

Examine by gas chromatography (*2.2.28*), using *N,N-diethylaniline R* as the internal standard.

Internal standard solution. Dissolve 50 mg of *N,N-diethylaniline R* in 4 mL of *0.1 M hydrochloric acid* and dilute to 50 mL with *water R*. Dilute 1 mL of this solution to 100 mL with *water R*.

Test solution. Dissolve in a ground-glass-stoppered tube 0.50 g of the substance to be examined in 30.0 mL of *water R*. Add 1.0 mL of the internal standard solution. Adjust the solution to a temperature of 26-28 °C. Add 1.0 mL of *strong sodium hydroxide solution R* and mix until completely dissolved. Add 2.0 mL of *trimethylpentane R*. Shake for 2 min and allow the phases to separate. Use the upper layer.

Reference solution. Dissolve 50.0 mg of *N,N-dimethylaniline R* in 4.0 mL of *0.1 M hydrochloric acid* and dilute to 50.0 mL with *water R*. Dilute 1.0 mL of this solution to 100.0 mL with *water R*. Dilute 1.0 mL of this solution to 30.0 mL with *water R*. Add 1.0 mL of the internal standard solution and 1.0 mL of *strong sodium hydroxide solution R*. Add 2.0 mL of *trimethylpentane R*. Shake for 2 min and allow the phases to separate. Use the upper layer.

The chromatographic procedure may be carried out using:

- a fused-silica capillary column 25 m long and 0.32 mm in internal diameter coated with cross-linked *polymethylphenylsiloxane R* (film thickness 0.52 µm),
- *helium for chromatography R* as the carrier gas with a split ratio 1:20, a column head pressure of 50 kPa and a split vent of 20 mL/min,
- a flame-ionisation detector,
- a split-liner consisting of a column about 1 cm long packed with *diatomaceous earth for gas chromatography R* impregnated with 10 per cent *m/m* of *poly(dimethyl)siloxane R*,

maintaining the temperature of the column at 150 °C for 5 min, then raising the temperature at a rate of 20 °C per min to 275 °C and maintaining it at 275 °C for 3 min and maintaining the temperature of the detector at 300 °C and that of the injection port at 220 °C.

The retention times are: *N,N*-dimethylaniline about 3.6 min, *N,N*-diethylaniline about 5.0 min.

Inject 1 µL of the test solution and 1 µL of the reference solution.

METHOD B

Examined by gas chromatography (*2.2.28*), using *naphthalene R* as the internal standard.

Internal standard solution. Dissolve 50 mg of *naphthalene R* in *cyclohexane R* and dilute to 50 mL with the same solvent. Dilute 5 mL of this solution to 100 mL with *cyclohexane R*.

Test solution. To 1.00 g of the substance to be examined in a ground-glass-stoppered tube add 5 mL of *1 M sodium hydroxide* and 1.0 mL of the internal standard solution. Stopper the tube and shake vigorously for 1 min. Centrifuge if necessary and use the upper layer.

Reference solution. To 50.0 mg of *N,N-dimethylaniline R* add 2 mL of *hydrochloric acid R* and 20 mL of *water R*, shake to dissolve and dilute to 50.0 mL with *water R*. Dilute 5.0 mL of this solution to 250.0 mL with *water R*. To 1.0 mL of the latter solution in a ground-glass-stoppered tube add 5 mL of *1 M sodium hydroxide* and 1.0 mL of the internal standard solution. Stopper the tube and shake vigorously for 1 min. Centrifuge if necessary and use the upper layer.

The chromatographic procedure may be carried out using:

- a glass column 2 m long and 2 mm in internal diameter packed with *silanised diatomaceous earth for gas chromatography R* impregnated with 3 per cent *m/m* of *polymethylphenylsiloxane R*,
- *nitrogen for chromatography R* as the carrier gas at a flow rate of 30 mL/min,
- a flame-ionisation detector,

maintaining the temperature of the column at 120 °C and that of the injection port and of the detector at 150 °C.

Inject 1 µL of the test solution and 1 µL of the reference solution.

01/2008:20427

2.4.27. HEAVY METALS IN HERBAL DRUGS AND FATTY OILS

Examine by atomic absorption spectrometry (*2.2.23*).

CAUTION: when using closed high-pressure digestion vessels and microwave laboratory equipment, be familiar with the safety and operating instructions given by the manufacturer.

APPARATUS

The apparatus typically consists of the following:

- as digestion flasks, polytetrafluoroethylene flasks with a volume of about 120 mL, fitted with an airtight closure, a valve to adjust the pressure inside the container and a polytetrafluoroethylene tube to allow release of gas,
- a system to make flasks airtight, using the same torsional force for each of them,
- a microwave oven, with a magnetron frequency of 2450 MHz, with a selectable output from 0 to 630 ± 70 W in 1 per cent increments, a programmable digital computer, a polytetrafluoroethylene-coated microwave cavity with a variable speed exhaust fan, a rotating turntable drive system and exhaust tubing to vent fumes,
- an atomic absorption spectrometer, equipped with hollow-cathode lamps as source of radiation and a deuterium lamp as background corrector; the system is fitted with:

  (a) a graphite furnace as atomisation device for cadmium, copper, iron, lead, nickel and zinc.

  (b) an automated continuous-flow hydride vapour generation system for arsenic and mercury.

METHOD

In case alternative apparatus is used, an adjustment of the instrument parameters may be necessary.

Clean all the glassware and laboratory equipment with a 10 g/L solution of *nitric acid R* before use.

Test solution. In a digestion flask place the prescribed quantity of the substance to be examined (about 0.50 g of powdered drug (1400) (*2.9.12*) or 0.50 g of fatty oil). Add 6 mL of *heavy metal-free nitric acid R* and 4 mL of *heavy metal-free hydrochloric acid R*. Make the flask airtight.

Place the digestion flasks in the microwave oven. Carry out the digestion in 3 steps according to the following programme, used for 7 flasks each containing the test solution: 80 per cent power for 15 min, 100 per cent power for 5 min, 80 per cent power for 20 min.

At the end of the cycle allow the flasks to cool in air and to each add 4 mL of *heavy metal-free sulfuric acid R*. Repeat the digestion programme. After cooling in air, open each digestion flask and introduce the clear, colourless solution obtained into a 50 mL volumetric flask. Rinse each digestion flask with 2 quantities, each of 15 mL, of *water R* and collect the rinsings in the volumetric flask. Add 1.0 mL of a 10 g/L solution of *magnesium nitrate R* and 1.0 mL of a 100 g/L solution of *ammonium dihydrogen phosphate R* and dilute to 50.0 mL with *water R*.

Blank solution. Mix 6 mL of *heavy metal-free nitric acid R* and 4 mL of *heavy metal-free hydrochloric acid R* in a digestion flask. Carry out the digestion in the same manner as for the test solution.

CADMIUM, COPPER, IRON, LEAD, NICKEL AND ZINC

Measure the content of cadmium, copper, iron, lead, nickel and zinc by the standard additions method (*2.2.23, Method II*), using reference solutions of each heavy metal and the instrumental parameters described in Table 2.4.27.-1.

The absorbance value of the blank solution is automatically subtracted from the value obtained with the test solution.

Table 2.4.27.-1

		Cd	Cu	Fe	Ni	Pb	Zn
Wavelength	nm	228.8	324.8	248.3	232	283.5	213.9
Slit width	nm	0.5	0.5	0.2	0.2	0.5	0.5
Lamp current	mA	6	7	5	10	5	7
Ignition temperature	°C	800	800	800	800	800	800
Atomisation temperature	°C	1800	2300	2300	2500	2200	2000
Background corrector		on	off	off	off	off	off
Nitrogen flow	L/min	3	3	3	3	3	3

ARSENIC AND MERCURY

Measure the content of arsenic and mercury in comparison with the reference solutions of arsenic or mercury at a known concentration by direct calibration (*2.2.23, Method I*) using an automated continuous-flow hydride vapour generation system.

The absorbance value of the blank solution is automatically subtracted from the value obtained with the test solution.

Arsenic

Sample solution. To 19.0 mL of the test solution or of the blank solution as prescribed above, add 1 mL of a 200 g/L solution of *potassium iodide R*. Allow the test solution to stand at room temperature for about 50 min or at 70 °C for about 4 min.

Acid reagent. Heavy metal-free hydrochloric acid R.

Reducing reagent. A 6 g/L solution of *sodium tetrahydroborate R* in a 5 g/L solution of *sodium hydroxide R*.

The instrumental parameters in Table 2.4.27.-2 may be used.

Mercury

Sample solution. Test solution or blank solution, as prescribed above.

Acid reagent. A 515 g/L solution of *heavy metal-free hydrochloric acid R*.

Reducing reagent. A 10 g/L solution of *stannous chloride R* in *heavy metal-free dilute hydrochloric acid R*.

The instrumental parameters in Table 2.4.27.-2 may be used.

Table 2.4.27.-2

		As	Hg
Wavelength	nm	193.7	253.7
Slit width	nm	0.2	0.5
Lamp current	mA	10	4
Acid reagent flow rate	mL/min	1.0	1.0
Reducing reagent flow rate	mL/min	1.0	1.0
Sample solution flow rate	mL/min	7.0	7.0
Absorption cell		Quartz (heated)	Quartz (unheated)
Background corrector		off	off
Nitrogen flow rate	L/min	0.1	0.1

01/2008:20428

2.4.28. 2-ETHYLHEXANOIC ACID

Examine by gas chromatography (*2.2.28*), using *3-cyclohexylpropionic acid R* as the internal standard.

Internal standard solution. Dissolve 100 mg of *3-cyclohexylpropionic acid R* in *cyclohexane R* and dilute to 100 mL with the same solvent.

Test solution. To 0.300 g of the substance to be examined, add 4.0 mL of a 33 per cent *V/V* solution of *hydrochloric acid R*. Shake vigorously for 1 min with 1.0 mL of the internal standard solution. Allow the phases to separate (if necessary, centrifuge for a better separation). Use the upper layer.

Reference solution. Dissolve 75.0 mg of *2-ethylhexanoic acid R* in the internal standard solution and dilute to 50.0 mL with the same solution. To 1.0 mL of the solution add 4.0 mL of a 33 per cent *V/V* solution of *hydrochloric acid R*. Shake vigorously for 1 min. Allow the phases to separate (if necessary, centrifuge for a better separation). Use the upper layer.

The chromatographic procedure may be carried out using:

- a wide-bore fused-silica column 10 m long and 0.53 mm in internal diameter coated with *macrogol 20 000 2-nitroterephthalate R* (film thickness 1.0 µm),
- *helium for chromatography R* as the carrier gas at a flow rate of 10 mL/min,
- a flame-ionisation detector,

with the following temperature programme:

	Time (min)	Temperature (°C)	Rate (°C/min)	Comment
Column	0 - 2	40	–	isothermal
	2 - 7.3	40 → 200	30	linear gradient
	7.3 - 10.3	200	–	isothermal
Injection port		200		
Detector		300		

Inject 1 µL of the test solution and 1 µL of the reference solution.

The test is not valid unless the resolution between the peaks due to 2-ethylhexanoic acid (first peak) and the internal standard is at least 2.0.

Calculate the percentage content of 2-ethylhexanoic acid from the expression:

$$\frac{A_T \times I_R \times m_R \times 2}{A_R \times I_T \times m_T}$$

A_T = area of the peak due to 2-ethylhexanoic acid in the chromatogram obtained with the test solution,

A_R = area of the peak due to 2-ethylhexanoic acid in the chromatogram obtained with the reference solution,

I_T = area of the peak due to the internal standard in the chromatogram obtained with the test solution,

I_R = area of the peak due to the internal standard in the chromatogram obtained with the reference solution,

m_T = mass of the substance to be examined in the test solution, in grams,

m_R = mass of 2-ethylhexanoic acid in the reference solution, in grams.

07/2010:20429

2.4.29. COMPOSITION OF FATTY ACIDS IN OILS RICH IN OMEGA-3 ACIDS

The assay may be used for quantitative determination of the EPA and DHA content in omega-3-containing products of fish oil in different concentrations. The method is applicable to triglycerides or ethyl esters and the results are expressed as triglycerides or ethyl esters, respectively.

EPA AND DHA

Gas chromatography (*2.2.28*). *Carry out the operations as rapidly as possible, avoiding exposure to actinic light, oxidising agents, oxidation catalysts (for example, copper and iron) and air.*

The assay is carried out on the methyl or ethyl esters of (all-*Z*)-eicosa-5,8,11,14,17-pentaenoic acid (EPA; 20:5 n-3) and (all-*Z*)-docosa-4,7,10,13,16,19-hexaenoic acid (DHA; 22:6 n-3) in the substance to be examined.

Internal standard. Methyl tricosanoate R.

Test solution (a)

A. Dissolve the mass of sample to be examined according to Table 2.4.29.-1 and about 70.0 mg of the internal standard in a 50 mg/L solution of *butylhydroxytoluene R* in *trimethylpentane R* and dilute to 10.0 mL with the same solution. Gentle heating (up to 60 °C) may be applied to dissolve the internal standard.

Table 2.4.29.-1.

Approximate sum EPA + DHA (per cent)	Mass of sample to be examined (g)
30 - 50	0.4 - 0.5
50 - 70	0.3
70 - 90	0.25

Ethyl esters are now ready for analysis. For triglycerides continue as described in step B.

B. Introduce 2.0 mL of the solution obtained in step A into a quartz tube and evaporate the solvent with a gentle current of *nitrogen R*. Add 1.5 mL of a 20 g/L solution of *sodium hydroxide R* in *methanol R*, cover with *nitrogen R*, cap tightly with a polytetrafluoroethylene-lined cap, mix and heat on a water-bath for 7 min. Allow to cool. Add 2 mL of *boron trichloride-methanol solution R*, cover with *nitrogen R*, cap tightly, mix and heat on a water-bath for 30 min. Cool to 40-50 °C, add 1 mL of *trimethylpentane R*, cap and shake vigorously for at least 30 s. Immediately add 5 mL of a *saturated sodium chloride solution R*, cover with *nitrogen R*, cap and shake thoroughly for at least 15 s. Transfer the upper layer to a separate tube. Shake the methanol layer once more with 1 mL of *trimethylpentane R*. Wash the combined trimethylpentane extracts with 2 quantities, each of 1 mL, of *water R* and dry over *anhydrous sodium sulfate R*. Prepare 3 solutions for each sample.

Test solution (b). Dissolve 0.300 g of the sample to be examined in a 50 mg/L solution of *butylhydroxytoluene R* in *trimethylpentane R* and dilute to 10.0 mL with the same solution. Proceed as described for test solution (a).

Reference solution (a_1). Dissolve about 70.0 mg of the internal standard and 90.0 mg of *eicosapentaenoic acid ethyl ester CRS* in a 50 mg/L solution of *butylhydroxytoluene R* in *trimethylpentane R* and dilute to 10.0 mL with the same solution. Gentle heating (up to 60 °C) may be applied to dissolve the internal standard.

Reference solution (a_2). Dissolve 60.0 mg of *docosahexaenoic acid ethyl ester CRS* and about 70.0 mg of the internal standard in a 50 mg/L solution of *butylhydroxytoluene R* in *trimethylpentane R* and dilute to 10.0 mL with the same solution. Gentle heating (up to 60 °C) may be applied to dissolve the internal standard.

For both reference solution (a_1) and reference solution (a_2) proceed as described for test solution (a) step A when analysing ethyl esters. For analysis of triglycerides, continue with step B in the same manner as for test solution (a) and prepare 3 solutions for each sample.

Reference solution (b). Into a 10 mL volumetric flask dissolve 0.3 g of *methyl arachidate R*, 0.3 g of *methyl behenate R*, 0.3 g of *methyl palmitate R* and 0.3 g of *methyl stearate R* in a 50 mg/L solution of *butylhydroxytoluene R* in *trimethylpentane R* and dilute to 10.0 mL with the same solution.

Reference solution (c). Into a 10 mL volumetric flask dissolve a sample containing about 55.0 mg of *docosahexaenoic acid methyl ester R* and about 5.0 mg of *tetracos-15-enoic acid methyl ester R* in a 50 mg/L solution of *butylhydroxytoluene R* in *trimethylpentane R* and dilute to 10.0 mL with the same solution.

Column:
- *material*: fused silica;
- *dimensions*: *l* = at least 25 m, Ø = 0.25 mm;
- *stationary phase*: bonded *macrogol 20 000 R* (film thickness 0.2 µm).

Carrier gas: *hydrogen for chromatography R* or *helium for chromatography R*.

Flow rate: 1 mL/min.

Split ratio: 1:200, alternatively splitless with temperature control (sample solutions need to be diluted 1/200 with a 50 mg/L solution of *butylhydroxytoluene R* in *trimethylpentane R* before injection).

Temperature:

	Time (min)	Temperature (°C)
Column	0 - 2	170
	2 - 25.7	170 → 240
	25.7 - 28	240
Injection port		250
Detector		270

Detection: flame ionisation.

Injection: 1 µL, twice.

System suitability:
- in the chromatogram obtained with reference solution (b), the area per cent composition increases in the following order: methyl palmitate, methyl stearate, methyl arachidate, methyl behenate; the difference between the percentage area of methyl palmitate and that of methyl behenate is less than 2.0 area per cent units;
- *resolution*: minimum of 1.2 between the peaks due to docosahexaenoic acid methyl ester and to tetracos-15-enoic acid methyl ester in the chromatogram obtained with reference solution (c);
- in the chromatogram obtained with test solution (a), the peaks due to methyl tricosanoate and any heneicosapentaenoic acid methyl ester or ethyl ester (C21:5) present when compared with the chromatogram obtained with test solution (b) are clearly separated (if not, a correction factor has to be used).

Calculate the percentage content of EPA and DHA using the following expression and taking into account the assigned value of the reference substances:

$$A_x \times \frac{A_{x,3}}{m_{x,3}} \times \frac{m_1}{A_1} \times \frac{m_{x,r}}{A_{x,r}} \times \frac{1}{m_2} \times C \times 100$$

m_1 = mass of the internal standard in test solution (a), in milligrams;

m_2 = mass of the sample to be examined in test solution (a), in milligrams;

$m_{x,3}$ = mass of the internal standard in reference solution (a_1) (EPA determination), or in reference solution (a_2) (DHA determination), in milligrams;

$m_{x,r}$ = mass of *eicosapentaenoic acid ethyl ester CRS* in reference solution (a_1) or *docosahexaenoic acid ethyl ester CRS* in reference solution (a_2), in milligrams;

A_x = area of the peak due to eicosapentaenoic acid ester or docosahexaenoic acid ester in the chromatogram obtained with test solution (a);

$A_{x,r}$ = area of the peak due to eicosapentaenoic acid ester in the chromatogram obtained with reference solution (a_1) or to docosahexaenoic acid ester in the chromatogram obtained with reference solution (a_2);

A_1 = area of the peak due to the internal standard in the chromatogram obtained with test solution (a);

$A_{x,3}$ = area of the peak due to the internal standard in the chromatogram obtained with reference solution (a_1) (EPA determination) or with reference solution (a_2) (DHA determination);

C = conversion factor between ethyl ester and triglycerides,

C = 1.00 for ethyl esters,

C = 0.954 for EPA,

C = 0.957 for DHA.

TOTAL OMEGA-3 ACIDS

From the assay for EPA and DHA, calculate the percentage content of the total omega-3 acids using the following expression and identifying the peaks from the chromatograms:

$$EPA + DHA + \frac{A_{n-3}\ (EPA + DHA)}{A_{\mathrm{EPA}} + A_{\mathrm{DHA}}}$$

EPA = percentage content of EPA;

DHA = percentage content of DHA;

A_{n-3} = sum of the areas of the peaks due to C18:3 n-3, C18:4 n-3, C20:4 n-3, C21:5 n-3 and C22:5 n-3 esters in the chromatogram obtained with test solution (b);

A_{EPA} = area of the peak due to EPA ester in the chromatogram obtained with test solution (b);

A_{DHA} = area of the peak due to DHA ester in the chromatogram obtained with test solution (b).

01/2008:20430

2.4.30. ETHYLENE GLYCOL AND DIETHYLENE GLYCOL IN ETHOXYLATED SUBSTANCES

Ethoxylated substances may contain varied amounts of ethylene glycol and diethylene glycol, as a result of the manufacturing process. The following method may be used for the quantitative determination of these substances, in particular in the case of the following surfactants: macrogolglycerol ricinoleate, macrogolglycerol hydroxystearate, macrogol 15 hydroxystearate, nonoxinol 9 and macrogol cetostearyl ether.

Gas chromatography (*2.2.28*).

Internal standard solution. Dissolve 30.0 mg of *1,2-pentanediol R* in *acetone R* and dilute to 30.0 mL with the same solvent. Dilute 1.0 mL of this solution to 20.0 mL with *acetone R*.

Test solution. Dissolve 0.500 g of the substance to be examined in the internal standard solution and dilute to 10.0 mL with the same solution.

Reference solution (a). Mix 30.0 mg of *ethylene glycol R* with *acetone R* and dilute to 100.0 mL with the same solvent. Dilute 1.0 mL to 10.0 mL with the internal standard solution.

Reference solution (b). Prepare a solution of *diethylene glycol R* with a concentration corresponding to the prescribed limit and using the same solvents as for the preparation of reference solution (a).

Column:
- *material*: fused silica,
- *size*: *l* = 30 m, Ø = 0.53 mm,
- *stationary phase*: *macrogol 20 000 R* (film thickness 1 µm).

Carrier gas: *helium for chromatography R.*

Flow rate: 10 mL/min.

Split ratio: 1:3.

Temperature:

	Time (min)	Temperature (°C)
Column	0 - 40	80 → 200
	40 - 45	200 → 230
	45 - 65	230
Injection port		250
Detector		250

Detection: flame ionisation.

Injection: 2 µL.

Relative retention with reference to 1,2-pentanediol (retention time = about 19 min): ethylene glycol = about 0.7; diethylene glycol = about 1.3.

01/2008:20431

2.4.31. NICKEL IN HYDROGENATED VEGETABLE OILS

Atomic absorption spectrometry (*2.2.23, Method I*).

CAUTION: when using closed high-pressure digestion vessels and microwave laboratory ovens, be familiar with the safety and operating instructions given by the manufacturer.

The reagents magnesium nitrate R and ammonium dihydrogen phosphate R must be controlled for nickel before use. The actual nickel content is taken into account in the calculation of the nickel content of the sample.

Test solution. Weigh 0.250 g (*m*) of the substance to be examined into a suitable high-pressure-resistant digestion vessel (fluoropolymer or quartz glass), add 6.0 mL of *nickel-free nitric acid R* and 2.0 mL of *strong hydrogen peroxide solution R*. Prepare a blank solution in the same manner. Place the closed vessels in a laboratory microwave oven and digest with an appropriate programme, e.g. 1000 W for 40 min. Allow the digestion vessels to cool before opening. Add 2.0 mL of *strong hydrogen peroxide solution R* and repeat the digestion step. Allow the digestion vessels to cool before opening. Quantitatively transfer to a 25 mL flask, add 0.5 mL of a 10 g/L solution of *magnesium nitrate R* and 0.5 mL of a 100 g/L solution of *ammonium dihydrogen phosphate R*, dilute to 25.0 mL with *water for chromatography R* and mix.

Reference solutions. Into 4 volumetric flasks, introduce 25 µL, 50 µL, 75 µL and 100 µL of *nickel standard solution (5 ppm Ni) R*. To each flask, add 0.5 mL of a 10 g/L solution of *magnesium nitrate R*, 0.5 mL of a 100 g/L solution of *ammonium dihydrogen phosphate R* and 6.0 mL of *nickel-free nitric acid R* and dilute to 25.0 mL with *water for chromatography R*. Mix to obtain reference solutions containing respectively 5 ng/mL, 10 ng/mL, 15 ng/mL and 20 ng/mL (ppb) of nickel.

Zero solution. In a volumetric flask, introduce 1.0 mL of a 10 g/L solution of *magnesium nitrate R*, 1.0 mL of a 100 g/L solution of *ammonium dihydrogen phosphate R* and 12.0 mL of *nickel-free nitric acid R*. Dilute to 50.0 mL with *water for chromatography R* and mix.

Method. Determine the absorbance of each solution at 232.0 nm using a suitable graphite furnace atomic absorption spectrometer equipped with a background compensation system, a pyrolytically-coated tube, and a nickel hollow-cathode lamp. Maintain the drying temperature of the furnace at 120 °C for 35 s after a 5 s ramp, the ashing temperature at 1100 °C for 10 s after a 30 s ramp, the cooling temperature at 800 °C for 5 s after a 5 s decrease, and the atomisation temperature at 2600 °C for 7 s. Use the zero solution to set the instrument to zero. Using the calibration curve, determine the concentrations of the test solution and the blank solution from the corresponding absorptions. If necessary, dilute with the zero solution to obtain a reading within the calibrated absorbance range.

Calculate the content of Ni in micrograms per gram (ppm) using the following expression:

$$\frac{c \times f}{m \times 40}$$

c = measured concentration of Ni, in nanograms per millilitre;

f = dilution factor of the test solution;

m = mass of the substance to be examined, in grams.

07/2010:20432

2.4.32. TOTAL CHOLESTEROL IN OILS RICH IN OMEGA-3 ACIDS

This method may be used for the quantitative determination of the sum of free and esterified cholesterol in products of fish oils rich in omega-3 acids (as ethyl esters or triglycerides).

Gas chromatography (*2.2.28*).

Internal standard stock solution. Dissolve 0.15 g of *(5α)-cholestane R* in *heptane R* and dilute to 50.0 mL with the same solvent.

Internal standard working solution. Prepare the solution immediately before use. Dilute 1.0 mL of the internal standard stock solution to 10.0 mL with *heptane R*.

Cholesterol stock solution. Dissolve 30.0 mg of *cholesterol R* in *heptane R* and dilute to 10.0 mL with the same solvent. The solution is dispensed into gas chromatography vials and may be stored in a deep-freezer for up to 6 months.

Cholesterol working solution. Prepare the solution immediately before use. Dilute 1.0 mL of the cholesterol stock solution to 10.0 mL with *heptane R*.

α-Tocopherol solution. Dilute 15.0 mg of *α-tocopherol CRS* to 10.0 mL with *heptane R*.

Test solution. Weigh 0.100 g of the substance to be examined into a 15 mL quartz tube. Add 1.0 mL of the internal standard stock/working solution, depending on the expected cholesterol content in the oil (see Table 2.4.32.-1).

Evaporate to dryness on a heating block at 50 °C under a gentle stream of nitrogen, while mixing. Add 0.5 mL of a 50 per cent solution of *potassium hydroxide R* and 3.0 mL of *ethanol (96 per cent) R*. Fill the tube with *nitrogen R* and cap. Further heat on the heating block at 100 °C for 1 h with stirring. Cool for about 10 min and add 6 mL of *distilled water R*. Extract with 4 quantities, each of 2.5 mL, of *ether R*, mixing each time for 1 min using a vortex mixer. Transfer the ether phase to a large centrifuge tube or a separating funnel and wash the combined extracts with 5 mL of *distilled water R*, mixing carefully a fixed number of times, e.g. 60 times. Discard the aqueous phase, add 5 mL of a 3 per cent solution of *potassium hydroxide R* to the ether phase and mix carefully 20 times. Discard the aqueous phase, add another 5 mL of *distilled water R* and mix carefully a further 20 times. Transfer the ether phase into a small centrifuge tube, avoiding any transfer of water. If an emulsion forms during the process, add a small amount of *sodium chloride R* to get a separation of the phases.

Evaporate to dryness under a gentle stream of nitrogen with careful heating. Dissolve the residue in 600 µL of *ethyl acetate R*.

Depending on the expected cholesterol content in the oil, the solution is further diluted as follows:

- content less than 3 mg/g: dilute 200 µL of the solution to 2.0 mL with *ethyl acetate R*;
- content greater than or equal to 3 mg/g: dilute 20 µL of the solution to 2.0 mL with *ethyl acetate R*.

Reference solution (a). Transfer 1.0 mL of the internal standard stock/working solution and 1.0 mL of the cholesterol stock/working solution, depending on the expected cholesterol content in the oil (see Table 2.4.32.-1), to a 15 mL quartz tube and continue as described for the test solution, starting with "Evaporate to dryness on a heating block...".

Reference solution (b). Mix 1.0 mL of the internal standard stock solution, 1.0 mL of the cholesterol stock solution and 2.0 mL of the α-tocopherol solution in a suitable flask. Evaporate to dryness under a gentle stream of nitrogen with careful heating. Dissolve the residue in *ethyl acetate R* and dilute to 50.0 mL with the same solvent. Dilute 1.0 mL of this solution to 10.0 mL with *ethyl acetate R*. The solution may be stored in a deep-freezer for up to 6 months.

Table 2.4.32.-1. – *Preparation of the test and reference solutions*

	Test solution		**Reference solution (a)**		**Reference solution (b)**
	less than 3 mg/g	greater than or equal to 3 mg/g	less than 3 mg/g	greater than or equal to 3 mg/g	
Internal standard stock solution	–	+	–	+	+
Internal standard working solution	+	–	+	–	–
Cholesterol stock solution	–	–	–	+	+
Cholesterol working solution	–	–	+	–	–
α-Tocopherol solution	–	–	–	–	+

Column:

- *size*: *l* = 30 m, Ø = 0.25 mm (film thickness 0.25 µm);
- *stationary phase*: *poly(dimethyl)(diphenyl)siloxane R*.

Carrier gas: *helium for chromatography R*.

Flow rate: 1.3 mL/min.

Temperature:

	Time (min)	**Temperature (°C)**
Column	0 - 1	170
	1 - 38	170 → 320
	38 - 40	320
Injection port		320
Detector		300

Detection: flame ionisation.

Injection: 1 µL.

System suitability: reference solution (b):

- *resolution*: minimum 1.2 between the peaks due to cholesterol and α-tocopherol.

Calculate the content of total cholesterol, expressed as milligrams of cholesterol per gram of oil, using the following expression:

$$\frac{A_1 \times m_2 \times F}{A_2 \times m_1 \times R}$$

A_1 = area of the peak due to cholesterol in the chromatogram obtained with the test solution;

A_2 = area of the peak due to (5α)-cholestane in the chromatogram obtained with the test solution;

m_1 = mass of the substance to be examined in the test solution, in grams;

m_2 = mass of (5α)-cholestane in the internal standard stock solution, in grams;

F = 20 for oils with an expected cholesterol content greater than or equal to 3 mg/g; 2 for oils with an expected cholesterol content less than 3 mg/g;

R = response factor.

Calculate the response factor R using the following expression:

$$\frac{A_3 \times m_2}{A_4 \times m_3 \times 5}$$

A_3 = area of the peak due to cholesterol in the chromatogram obtained with reference solution (a);

A_4 = area of the peak due to (5α)-cholestane in the chromatogram obtained with reference solution (a);

m_3 = mass of cholesterol in the cholesterol stock solution, in grams.

2.5. ASSAYS

01/2008:20501

2.5.1. ACID VALUE

The acid value I_A is the number that expresses, in milligrams the quantity of potassium hydroxide required to neutralise the free acids present in 1 g of the substance.

Dissolve 10.00 g of the substance to be examined, or the quantity prescribed, (*m* g), in 50 mL of a mixture of equal volumes of *ethanol (96 per cent) R* and *light petroleum R3*, previously neutralised with *0.1 M potassium hydroxide* or *0.1 M sodium hydroxide*, unless otherwise specified, using 0.5 mL of *phenolphthalein solution R1* as indicator. If necessary, heat to about 90 °C to dissolve the substance to be examined. When the substance to be examined has dissolved, titrate with *0.1 M potassium hydroxide* or *0.1 M sodium hydroxide* until the pink colour persists for at least 15 s (*n* mL of titrant). When heating has been applied to aid dissolution, maintain the temperature at about 90 °C during the titration.

$$I_A = \frac{5.610n}{m}$$

01/2008:20502

2.5.2. ESTER VALUE

The ester value I_E is the number that expresses in milligrams the quantity of potassium hydroxide required to saponify the esters present in 1 g of the substance. It is calculated from the saponification value I_S and the acid value I_A:

$$I_E = I_S - I_A$$

01/2008:20503

2.5.3. HYDROXYL VALUE

The hydroxyl value I_{OH} is the number that expresses in milligrams the quantity of potassium hydroxide required to neutralise the acid combined by acylation in 1 g of the substance.

METHOD A

Introduce the quantity of the substance to be examined shown in Table 2.5.3.-1 (*m* g) into a 150 mL acetylation flask fitted with an air condenser, unless another quantity is prescribed in the monograph. Add the quantity of *acetic anhydride solution R1* stated in Table 2.5.3.-1 and attach the air condenser.

Table 2.5.3.-1

Presumed value I_{OH}	Quantity of sample (g)	Volume of acetylating reagent (mL)
10 - 100	2.0	5.0
100 - 150	1.5	5.0
150 - 200	1.0	5.0
200 - 250	0.75	5.0
250 - 300	0.60 or 1.20	5.0 or 10.0
300 - 350	1.0	10.0
350 - 700	0.75	15.0
700 - 950	0.5	15.0

Heat the flask in a water-bath for 1 h keeping the level of the water about 2.5 cm above the level of the liquid in the flask. Withdraw the flask and allow to cool. Add 5 mL of *water R* through the upper end of the condenser. If a cloudiness appears add sufficient *pyridine R* to clear it, noting the volume added. Shake the flask and replace in the water-bath for 10 min. Withdraw the flask and allow to cool. Rinse the condenser and the walls of the flask with 5 mL of *alcohol R*, previously neutralised to *phenolphthalein solution R1*. Titrate with *0.5 M alcoholic potassium hydroxide* using 0.2 mL of *phenolphthalein solution R1* as indicator (n_1 mL of *0.5 M alcoholic potassium hydroxide*). Carry out a blank test under the same conditions (n_2 mL of *0.5 M alcoholic potassium hydroxide*).

$$I_{OH} = \frac{28.05\,(n_2 - n_1)}{m} + I_A$$

METHOD B

Introduce the prescribed quantity of the substance to be examined (*m* g) into a perfectly dry 5 mL conical flask fitted with a ground-glass or suitable plastic stopper and add 2.0 mL of *propionic anhydride reagent R*. Close the flask and shake gently to dissolve the substance. Allow to stand for 2 h unless otherwise prescribed. Remove the stopper and transfer the flask and its contents into a wide-mouthed 500 mL conical flask containing 25.0 mL of a 9 g/L solution of *aniline R* in *cyclohexane R* and 30 mL of *glacial acetic acid R*. Swirl the contents of the flask, allow to stand for 5 min, add 0.05 mL of *crystal violet solution R* and titrate with *0.1 M perchloric acid* until an emerald-green colour is obtained (n_1 mL of *0.1 M perchloric acid*). Carry out a blank test under the same conditions (n_2 mL of *0.1 M perchloric acid*).

$$I_{OH} = \frac{5.610\,(n_1 - n_2)}{m}$$

To take account of any water present, determine this (*y* per cent) by the semi-micro determination of water (*2.5.12*).

The hydroxyl value is then given by the equation:

$$I_{OH} = (\text{hydroxyl value as determined}) - 31.1y$$

01/2008:20504

2.5.4. IODINE VALUE

The iodine value I_I is the number that expresses in grams the quantity of halogen, calculated as iodine, that can be fixed in the prescribed conditions by 100 g of the substance.

When the monograph does not specify the method to be used, method A is applied. Any change from method A to method B is validated.

METHOD A

Unless otherwise prescribed, use the following quantities (Table 2.5.4.-1) for the determination.

Table 2.5.4.-1

Presumed value I_I	Quantity of sample (g)
less than 20	1.0
20 - 60	0.5 - 0.25
60 - 100	0.25 - 0.15
more than 100	0.15 - 0.10

Introduce the prescribed quantity of the substance to be examined (*m* g) into a 250 mL flask fitted with a ground-glass stopper and previously dried or rinsed with *glacial acetic acid R*, and dissolve it in 15 mL of *chloroform R* unless otherwise prescribed. Add very slowly 25.0 mL of *iodine bromide solution R*. Close the flask and keep it in the dark for 30 min unless otherwise prescribed, shaking frequently. Add 10 mL of a 100 g/L solution of *potassium iodide R* and 100 mL of *water R*. Titrate with *0.1 M sodium thiosulfate*, shaking vigorously until the yellow colour is almost discharged. Add 5 mL of *starch solution R* and continue the titration adding

the *0.1 M sodium thiosulfate* dropwise until the colour is discharged (n_1 mL of *0.1 M sodium thiosulfate*). Carry out a blank test under the same conditions (n_2 mL of *0.1 M sodium thiosulfate*).

$$I_I = \frac{1.269\ (n_2 - n_1)}{m}$$

METHOD B

Unless otherwise prescribed, use the following quantities (Table 2.5.4.-2) for the determination.

Table 2.5.4.-2

Presumed value I_I	Mass (g) (corresponding to an excess of 150 per cent ICl)	Mass (g) (corresponding to an excess of 100 per cent ICl)	Iodine chloride solution (mL)
<3	10	10	25
3	8.4613	10.5760	25
5	5.0770	6.3460	25
10	2.5384	3.1730	20
20	0.8461	1.5865	20
40	0.6346	0.7935	20
60	0.4321	0.5288	20
80	0.3173	0.3966	20
100	0.2538	0.3173	20
120	0.2115	0.2644	20
140	0.1813	0.2266	20
160	0.1587	0.1983	20
180	0.1410	0.1762	20
200	0.1269	0.1586	20

The mass of the sample is such that there will be an excess of *iodine chloride solution R* of 50 per cent to 60 per cent of the amount added, i.e. 100 per cent to 150 per cent of the amount absorbed.

Introduce the prescribed quantity of the substance to be examined (*m* g) into a 250 mL flask fitted with a ground-glass stopper and previously rinsed with *glacial acetic acid R* or dried, and dissolve it in 15 mL of a mixture of equal volumes of *cyclohexane R* and *glacial acetic acid R*, unless otherwise prescribed. If necessary, melt the substance before dissolution (melting point greater than 50 °C). Add very slowly the volume of *iodine chloride solution R* stated in Table 2.5.4.-2. Close the flask and keep it in the dark for 30 min, unless otherwise prescribed, shaking frequently. Add 10 mL of a 100 g/L solution of *potassium iodide R* and 100 mL of *water R*. Titrate with *0.1 M sodium thiosulfate*, shaking vigorously until the yellow colour is almost discharged. Add 5 mL of *starch solution R* and continue the titration adding the *0.1 M sodium thiosulfate* dropwise until the colour is discharged (n_1 mL of *0.1 M sodium thiosulfate*). Carry out a blank test under the same conditions (n_2 mL of *0.1 M sodium thiosulfate*).

$$I_I = \frac{1.269\ (n_2 - n_1)}{m}$$

01/2008:20505

2.5.5. PEROXIDE VALUE

The peroxide value I_P is the number that expresses in milliequivalents of active oxygen the quantity of peroxide contained in 1000 g of the substance, as determined by the methods described below.

When the monograph does not specify the method to be used, method A is applied. Any change from method A to method B is validated.

METHOD A

Place 5.00 g of the substance to be examined (*m* g) in a 250 mL conical flask fitted with a ground-glass stopper. Add 30 mL of a mixture of 2 volumes of *chloroform R* and 3 volumes of *glacial acetic acid R*. Shake to dissolve the substance and add 0.5 mL of *saturated potassium iodide solution R*. Shake for exactly 1 min then add 30 mL of *water R*. Titrate with *0.01 M sodium thiosulfate*, adding the titrant slowly with continuous vigorous shaking, until the yellow colour is almost discharged. Add 5 mL of *starch solution R* and continue the titration, shaking vigorously, until the colour is discharged (n_1 mL of *0.01 M sodium thiosulfate*). Carry out a blank test under the same conditions (n_2 mL of *0.01 M sodium thiosulfate*). The volume of *0.01 M sodium thiosulfate* used in the blank titration must not exceed 0.1 mL.

$$I_P = \frac{10\,(n_1 - n_2)}{m}$$

METHOD B

Carry out the operations avoiding exposure to actinic light.

Place 50 mL of a mixture of 2 volumes of *trimethylpentane R* and 3 volumes of *glacial acetic acid R* in a conical flask and replace the stopper. Swirl the flask until the substance to be examined (*m* g; see Table 2.5.5.-1) has dissolved. Using a suitable volumetric pipette, add 0.5 mL of *saturated potassium iodide solution R* and replace the stopper. Allow the solution to stand for 60 ± 1 s, thoroughly shaking the solution continuously, then add 30 mL of *water R*.

Table 2.5.5.-1

Expected peroxide value I_P	Mass of substance to be examined (g)
0 to 12	2.00 to 5.00
12 to 20	1.20 to 2.00
20 to 30	0.80 to 1.20
30 to 50	0.500 to 0.800
50 to 90	0.300 to 0.500

Titrate the solution with *0.01 M sodium thiosulfate* (V_1 mL), adding it gradually and with constant, vigorous shaking, until the yellow iodine colour has almost disappeared. Add about 0.5 mL of *starch solution R1* and continue the titration, with constant shaking especially near the end-point, to liberate all of the iodine from the solvent layer. Add the sodium thiosulfate solution dropwise until the blue colour just disappears.

Depending on the volume of *0.01 M sodium thiosulfate* used, it may be necessary to titrate with *0.1 M sodium thiosulfate*.

NOTE: there is a 15 s to 30 s delay in neutralising the starch indicator for peroxide values of 70 and greater, due to the tendency of trimethylpentane to float on the surface of the aqueous medium and the time necessary to adequately mix the solvent and the aqueous titrant, thus liberating the last traces of iodine. It is recommended to use *0.1 M sodium thiosulfate* for peroxide values greater than 150. A small amount (0.5 per cent to 1.0 per cent *m/m*) of high HLB emulsifier (for example polysorbate 60) may be added to the mixture to retard the phase separation and decrease the time lag in the liberation of iodine.

Carry out a blank determination (V_0 mL). If the result of the blank determination exceeds 0.1 mL of titration reagent, replace the impure reagents and repeat the determination.

$$I_p = \frac{1000\,(V_1 - V_0)\,c}{m}$$

c = concentration of the sodium thiosulfate solution in moles, per litre.

01/2008:20506

2.5.6. SAPONIFICATION VALUE

The saponification value I_S is the number that expresses in milligrams the quantity of potassium hydroxide required to neutralise the free acids and to saponify the esters present in 1 g of the substance.

Unless otherwise prescribed, use the quantities indicated in Table 2.5.6.-1 for the determination.

Table 2.5.6.-1

Presumed value I_S	Quantity of sample (g)
<3	20
3 to 10	12 to 15
10 to 40	8 to 12
40 to 60	5 to 8
60 to 100	3 to 5
100 to 200	2.5 to 3
200 to 300	1 to 2
300 to 400	0.5 to 1

Introduce the prescribed quantity of the substance to be examined (*m* g) into a 250 mL borosilicate glass flask fitted with a reflux condenser. Add 25.0 mL of *0.5 M alcoholic potassium hydroxide* and a few glass beads. Attach the condenser and heat under reflux for 30 min, unless otherwise prescribed. Add 1 mL of *phenolphthalein solution R1* and titrate immediately (while still hot) with *0.5 M hydrochloric acid* (n_1 mL of *0.5 M hydrochloric acid*). Carry out a blank test under the same conditions (n_2 mL of *0.5 M hydrochloric acid*).

$$I_S = \frac{28.05\,(n_2 - n_1)}{m}$$

01/2008:20507

2.5.7. UNSAPONIFIABLE MATTER

The term "unsaponifiable matter" is applied to the substances non-volatile at 100-105 °C obtained by extraction with an organic solvent from the substance to be examined after it has been saponified. The result is calculated as per cent *m/m*.

Use ungreased ground-glass glassware.

Introduce the prescribed quantity of the substance to be examined (*m* g) into a 250 mL flask fitted with a reflux condenser. Add 50 mL of *2 M alcoholic potassium hydroxide R* and heat on a water-bath for 1 h, swirling frequently. Cool to a temperature below 25 °C and transfer the contents of the flask to a separating funnel with the aid of 100 mL of *water R*. Shake the liquid carefully with 3 quantities, each of 100 mL, of *peroxide-free ether R*. Combine the ether layers in another separating funnel containing 40 mL of *water R*, shake gently for a few minutes, allow to separate and reject the aqueous phase. Wash the ether phase with 2 quantities, each of 40 mL, of *water R* then wash successively with 40 mL of a 30 g/L solution of *potassium hydroxide R* and 40 mL of *water R*; repeat this procedure 3 times. Wash the ether phase several times, each with 40 mL of *water R*, until the aqueous phase is no longer alkaline to phenolphthalein. Transfer the ether phase to a tared flask, washing the separating funnel with *peroxide-free ether R*.

Distil off the ether with suitable precautions and add 6 mL of *acetone R* to the residue. Carefully remove the solvent in a current of air. Dry to constant mass at 100-105 °C. Allow to cool in a desiccator and weigh (*a* g).

$$\text{Unsaponifiable matter} = \frac{100a}{m}\ \text{per cent}$$

Dissolve the residue in 20 mL of *alcohol R*, previously neutralised to *phenolphthalein solution R* and titrate with *0.1 M ethanolic sodium hydroxide*. If the volume of *0.1 M ethanolic sodium hydroxide* used is greater than 0.2 mL, the separation of the layers has been incomplete; the residue weighed cannot be considered as "unsaponifiable matter". In case of doubt, the test must be repeated.

01/2008:20508

2.5.8. DETERMINATION OF PRIMARY AROMATIC AMINO-NITROGEN

Dissolve the prescribed quantity of the substance to be examined in 50 mL of *dilute hydrochloric acid R* or in another prescribed solvent and add 3 g of *potassium bromide R*. Cool in ice-water and titrate by slowly adding *0.1 M sodium nitrite* with constant stirring.

Determine the end-point electrometrically or by the use of the prescribed indicator.

01/2008:20509

2.5.9. DETERMINATION OF NITROGEN BY SULFURIC ACID DIGESTION

SEMI-MICRO METHOD

Place a quantity of the substance to be examined (*m* g) containing about 2 mg of nitrogen in a combustion flask, add 4 g of a powdered mixture of 100 g of *dipotassium sulfate R*, 5 g of *copper sulfate R* and 2.5 g of *selenium R*, and three glass beads. Wash any adhering particles from the neck into the flask with 5 mL of *sulfuric acid R*, allowing it to run down the sides of the flask, and mix the contents by rotation. Close the mouth of the flask loosely, for example by means of a glass bulb with a short stem, to avoid excessive loss of sulfuric acid. Heat gradually at first, then increase the temperature until there is vigorous boiling with condensation of sulfuric acid in the neck of the flask; precautions should be taken to prevent the upper part of the flask from becoming overheated. Continue the heating for 30 min, unless otherwise prescribed. Cool, dissolve the solid material by cautiously adding to the mixture 25 mL of *water R*, cool again and place in a steam-distillation apparatus. Add 30 mL of *strong sodium hydroxide solution R* and distil immediately by passing steam through the mixture. Collect about 40 mL of distillate in 20.0 mL of *0.01 M hydrochloric acid* and enough *water R* to cover the tip of the condenser. Towards the end of the distillation, lower the receiver so that the tip of the condenser is above the surface of the acid. Take precautions to prevent any water on the outer surface of the condenser from reaching the contents of the receiver. Titrate the distillate with *0.01 M sodium hydroxide*, using *methyl red mixed solution R* as indicator (n_1 mL of *0.01 M sodium hydroxide*).

Repeat the test using about 50 mg of *glucose R* in place of the substance to be examined (n_2 mL of *0.01 M sodium hydroxide*).

$$\text{Content of nitrogen} = \frac{0.01401\,(n_2 - n_1)}{m}\ \text{per cent}$$

01/2008:20510

2.5.10. OXYGEN-FLASK METHOD

Unless otherwise prescribed the combustion flask is a conical flask of at least 500 mL capacity of borosilicate glass with a ground-glass stopper fitted with a suitable carrier for the sample, for example in platinum or platinum-iridium.

Finely grind the substance to be examined, place the prescribed quantity in the centre of a piece of filter paper measuring about 30 mm by 40 mm provided with a small strip about 10 mm wide and 30 mm long. If paper impregnated with lithium carbonate is prescribed, moisten the centre of the paper with a saturated solution of *lithium carbonate R* and dry in an oven before use. Envelop the substance to be examined in the paper and place it in the sample carrier. Introduce into the flask *water R* or the prescribed solution designed to absorb the combustion products, displace the air with oxygen by means of a tube having its end just above the liquid, moisten the neck of the flask with *water R* and close with its stopper. Ignite the paper strip by suitable means with the usual precautions. Keep the flask firmly closed during the combustion. Shake the flask vigorously to completely dissolve the combustion products. Cool and after about 5 min, unless otherwise prescribed, carefully unstopper the flask. Wash the ground parts and the walls of the flask, as well as the sample carrier, with *water R*. Combine the combustion products and the washings and proceed as prescribed in the monograph.

01/2008:20511
corrected 8.0

2.5.11. COMPLEXOMETRIC TITRATIONS

ALUMINIUM

Introduce 20.0 mL of the prescribed solution into a 500 mL conical flask, add 25.0 mL of *0.1 M sodium edetate* and 10 mL of a mixture of equal volumes of a 155 g/L solution of *ammonium acetate R* and *dilute acetic acid R*. Boil for 2 min, then cool. Add 50 mL of *ethanol R* and 3 mL of a freshly prepared 0.25 g/L solution of *dithizone R* in *ethanol R*. Titrate the excess of sodium edetate with *0.1 M zinc sulfate* until the colour changes from greenish-blue to reddish-violet.

1 mL of *0.1 M sodium edetate* is equivalent to 2.698 mg of Al.

BISMUTH

Introduce the prescribed solution into a 500 mL conical flask. Dilute to 250 mL with *water R* and then, unless otherwise prescribed, add dropwise, with shaking, *concentrated ammonia R* until the mixture becomes cloudy. Add 0.5 mL of *nitric acid R*. Heat to about 70 °C until the cloudiness disappears completely. Add about 50 mg of *xylenol orange triturate R* and titrate with *0.1 M sodium edetate* until the colour changes from pinkish-violet to yellow.

1 mL of *0.1 M sodium edetate* is equivalent to 20.90 mg of Bi.

CALCIUM

Introduce the prescribed solution into a 500 mL conical flask, and dilute to 300 mL with *water R*. Add 6.0 mL of *strong sodium hydroxide solution R* and about 200 mg of *calconecarboxylic acid triturate R*. Titrate with *0.1 M sodium edetate* until the colour changes from violet to full blue.

1 mL of *0.1 M sodium edetate* is equivalent to 4.008 mg of Ca.

MAGNESIUM

Introduce the prescribed solution into a 500 mL conical flask and dilute to 300 mL with *water R*. Add 10 mL of *ammonium chloride buffer solution pH 10.0 R* and about 50 mg of *mordant black 11 triturate R*. Heat to about 40 °C then titrate at this temperature with *0.1 M sodium edetate* until the colour changes from violet to full blue.

1 mL of *0.1 M sodium edetate* is equivalent to 2.431 mg of Mg.

LEAD

Introduce the prescribed solution into a 500 mL conical flask and dilute to 200 mL with *water R*. Add about 50 mg of *xylenol orange triturate R* and *hexamethylenetetramine R* until the solution becomes violet-pink. Titrate with *0.1 M sodium edetate* until the violet-pink colour changes to yellow.

1 mL of *0.1 M sodium edetate* is equivalent to 20.72 mg of Pb.

ZINC

Introduce the prescribed solution into a 500 mL conical flask and dilute to 200 mL with *water R*. Add about 50 mg of *xylenol orange triturate R* and *hexamethylenetetramine R* until the solution becomes violet-pink. Add 2 g of *hexamethylenetetramine R* in excess. Titrate with *0.1 M sodium edetate* until the violet-pink colour changes to yellow.

1 mL of *0.1 M sodium edetate* is equivalent to 6.54 mg of Zn.

01/2013:20512

2.5.12. WATER: SEMI-MICRO DETERMINATION

The semi-micro determination of water is based upon the quantitative reaction of water with sulfur dioxide and iodine in a suitable anhydrous medium in the presence of a base with sufficient buffering capacity.

Apparatus

The apparatus consists of a titration vessel with:

- 2 identical platinum electrodes;
- tight inlets for introduction of solvent and titrant;
- an inlet for introduction of air via a desiccant;
- a sample inlet fitted with a stopper or, for liquids, a septum.

Inlet systems for introduction of dry nitrogen or for aspiration of solvents may also be fitted.

The titration is carried out according to the instrument supplier's instructions. Care is taken throughout the determination to avoid exposure of reagents and solvents to atmospheric moisture. The end-point is determined using 2 identical indicator electrodes connected to an electrical source that maintains between the electrodes either a constant current (*2.2.65. Voltametric titration*) or a constant voltage (*2.2.19. Amperometric titration*). Where direct titration is used (method A), addition of titrant causes either a decrease in voltage where constant current is maintained or an increase in current where constant voltage is maintained, until the end-point is reached. Instruments with automatic end-point detection are commonly used.

Standardisation. To the titration vessel, add *methanol R*, dried if necessary, or the solvent recommended by the supplier of the titrant. Where applicable for the apparatus used, eliminate residual water from the measurement cell or carry out a pre-titration. Introduce a suitable amount of water in an appropriate form (*water R* or a certified reference material) and carry out the titration, stirring for the necessary time. The water equivalent is not less than 80 per cent of that indicated by the supplier. Standardise the titrant before the first use and at suitable intervals thereafter.

Unless otherwise prescribed, use Method A.

Method A. Introduce into the titration vessel *methanol R*, or the solvent indicated in the monograph or recommended by the supplier of the titrant. Where applicable for the apparatus used, eliminate residual water from the measurement cell or carry out a pre-titration. Introduce the substance to be examined rapidly and carry out the titration, stirring for the necessary extraction time.

Method B. Introduce into the titration vessel *methanol R*, or the solvent indicated in the monograph or recommended by the supplier of the titrant. Where applicable for the apparatus

used, eliminate residual water from the measurement cell or carry out a pre-titration. Introduce the substance to be examined rapidly and in a suitable state of division. Add an accurately measured volume of the titrant, sufficient to give an excess of about 1 mL or the prescribed volume. Allow to stand protected from light for 1 min or the prescribed time, with stirring. Titrate the excess of reagent using *methanol R* or the prescribed solvent, containing an accurately known quantity of water.

Suitability. The accuracy of the determination with the chosen titrant must be verified for each combination of substance, titrant and solvent to be examined. The following procedure, given as an example, is suitable for samples containing 2.5-25 mg of water.

The water content of the substance to be examined is determined using the reagent/solvent system chosen. Thereafter, in the same titration vessel, sequential known amounts of water, corresponding to about 50-100 per cent of the amount found in the substance to be examined, are added in an appropriate form (at least 5 additions) and the water content is determined after each addition. Calculate the percentage recovery (r) after each addition using the following expression:

$$r = 100\frac{W_2}{W_1}$$

W_1 = amount of water added, in milligrams;

W_2 = amount of water found, in milligrams.

Calculate the mean percentage recovery ($\overline{r}$). The reagent/solvent system is considered to be acceptable if $\overline{r}$ is between 97.5 per cent and 102.5 per cent.

Calculate the regression line. The x-axis represents the cumulative water added whereas the y-axis represents the sum of the initial water content determined for the substance (M) and the cumulative water determined after each addition. Calculate the slope (b), the intercept with the y-axis (a) and the intercept of the extrapolated calibration line with the x-axis (d).

Calculate the percentage errors (e_1 and e_2) using the following expressions:

$$e_1 = 100\frac{a - M}{M}$$

$$e_2 = 100\frac{|d| - M}{M}$$

a = the y-axis intercept, in milligrams of water;

d = the x-axis intercept, in milligrams of water;

M = water content of the substance, in milligrams of water.

The reagent/solvent system is considered to be acceptable if:

- $|e_1|$ and $|e_2|$ are not greater than 2.5 per cent;
- b is between 0.975 and 1.025.

01/2008:20513

2.5.13. ALUMINIUM IN ADSORBED VACCINES

Homogenise the preparation to be examined and transfer a suitable quantity, presumed to contain 5 mg to 6 mg of aluminium, to a 50 mL combustion flask. Add 1 mL of *sulfuric acid R*, 0.1 mL of *nitric acid R* and some glass beads. Heat the solution until thick, white fumes are evolved. If there is charring at this stage add a few more drops of *nitric acid R* and continue boiling until the colour disappears. Allow to cool for a few minutes, carefully add 10 mL of *water R* and boil until a clear solution is obtained. Allow to cool, add 0.05 mL of *methyl orange solution R* and neutralise with *strong sodium hydroxide solution R* (6.5 mL to 7 mL). If a precipitate forms dissolve it by adding, dropwise, sufficient *dilute sulfuric acid R*. Transfer the solution to a 250 mL conical flask, rinsing the combustion flask with 25 mL of *water R*. Add 25.0 mL of *0.02 M sodium edetate*, 10 mL of *acetate buffer solution pH 4.4 R* and a few glass beads and boil gently for 3 min. Add 0.1 mL of *pyridylazonaphthol solution R* and titrate the hot solution with *0.02 M copper sulfate* until the colour changes to purplish-brown. Carry out a blank titration omitting the vaccine.

1 mL of *0.02 M sodium edetate* is equivalent to 0.5396 mg of Al.

01/2008:20514

2.5.14. CALCIUM IN ADSORBED VACCINES

All solutions used for this test must be prepared using water R.

Determine the calcium by atomic emission spectrometry (*2.2.22, Method I*). Homogenise the preparation to be examined. To 1.0 mL add 0.2 mL of *dilute hydrochloric acid R* and dilute to 3.0 mL with *water R*. Measure the absorbance at 620 nm.

01/2008:20515

2.5.15. PHENOL IN IMMUNOSERA AND VACCINES

Homogenise the preparation to be examined. Dilute an appropriate volume with *water R* so as to obtain a solution presumed to contain 15 µg of phenol per millilitre. Prepare a series of reference solutions with *phenol R* containing 5 µg, 10 µg, 15 µg, 20 µg and 30 µg of phenol per millilitre respectively. To 5 mL of the solution to be examined and to 5 mL of each of the reference solutions respectively, add 5 mL of *buffer solution pH 9.0 R*, 5 mL of *aminopyrazolone solution R* and 5 mL of *potassium ferricyanide solution R*. Allow to stand for 10 min and measure the intensity of colour at 546 nm.

Plot the calibration curve and calculate the phenol content of the preparation to be examined.

01/2008:20516

2.5.16. PROTEIN IN POLYSACCHARIDE VACCINES

Test solution. Use a volumetric flask with a suitable volume for preparation of a solution containing about 5 mg per millilitre of dry polysaccharide. Transfer the contents of a container quantitatively to the flask and dilute to volume with *water R*. Place 1 mL of the solution in a glass tube and add 0.15 mL of a 400 g/L solution of *trichloroacetic acid R*. Shake, allow to stand for 15 min, centrifuge for 10 min at 5000 r/min and discard the supernatant. Add 0.4 mL of *0.1 M sodium hydroxide* to the centrifugation residue.

Reference solutions. Dissolve 0.100 g of *bovine albumin R* in 100 mL of *0.1 M sodium hydroxide* (stock solution containing 1 g of protein per litre). Dilute 1 mL of the stock solution to 20 mL with *0.1 M sodium hydroxide* (working dilution 1: 50 mg of protein per litre). Dilute 1 mL of the stock solution to 4 mL with *0.1 M sodium hydroxide* (working dilution 2: 250 mg of protein per litre). Place in 6 glass tubes 0.10 mL, 0.20 mL and 0.40 mL of working dilution 1 and 0.15 mL, 0.20 mL and 0.25 mL of working dilution 2. Make up the volume in each tube to 0.40 mL using *0.1 M sodium hydroxide*.

Prepare a blank using 0.40 mL of *0.1 M sodium hydroxide*.

Add 2 mL of *cupri-tartaric solution R3* to each tube, shake and allow to stand for 10 min. Add to each tube 0.2 mL of a mixture of equal volumes of *phosphomolybdotungstic*

reagent R and *water R*, prepared immediately before use. Stopper the tubes, mix by inverting and allow to stand in the dark for 30 min. The blue colour is stable for 60 min. If necessary, centrifuge to obtain clear solutions.

Measure the absorbance (*2.2.25*) of each solution at 760 nm using the blank as the compensation liquid. Draw a calibration curve from the absorbances of the 6 reference solutions and the corresponding protein contents and read from the curve the content of protein in the test solution.

01/2008:20517

2.5.17. NUCLEIC ACIDS IN POLYSACCHARIDE VACCINES

Test solution. Use a volumetric flask with a suitable volume for preparation of a solution containing about 5 mg per millilitre of dry polysaccharide. Transfer the contents of a container quantitatively to the flask and dilute to volume with *water R*.

Dilute the test solution if necessary to obtain an absorbance value suitable for the instrument used. Measure the absorbance (*2.2.25*) at 260 nm using *water R* as the compensation liquid.

The absorbance of a 1 g/L solution of nucleic acid at 260 nm is 20.

01/2008:20518

2.5.18. PHOSPHORUS IN POLYSACCHARIDE VACCINES

Test solution. Use a volumetric flask with a suitable volume for preparation of a solution containing about 5 mg per millilitre of dry polysaccharide. Transfer the contents of a container quantitatively to the flask and dilute to volume with *water R*. Dilute the solution so that the volume used in the test (1 mL) contains about 6 µg of phosphorus. Transfer 1.0 mL of the solution to a 10 mL ignition tube.

Reference solutions. Dissolve 0.2194 g of *potassium dihydrogen phosphate R* in 500 mL of *water R* to give a solution containing the equivalent of 0.1 mg of phosphorus per millilitre. Dilute 5.0 mL of the solution to 100.0 mL with *water R*. Introduce 0.5 mL, 1.0 mL and 2.0 mL of the dilute solution into 3 ignition tubes.

Prepare a blank solution using 2.0 mL of *water R* in an ignition tube.

To all the tubes add 0.2 mL of *sulfuric acid R* and heat in an oil bath at 120 °C for 1 h and then at 160 °C until white fumes appear (about 1 h). Add 0.1 mL of *perchloric acid R* and heat at 160 °C until the solution is decolorised (about 90 min). Cool and add to each tube 4 mL of *water R* and 4 mL of *ammonium molybdate reagent R*. Heat in a water-bath at 37 °C for 90 min and cool. Adjust the volume to 10.0 mL with *water R*. The blue colour is stable for several hours.

Measure the absorbance (*2.2.25*) of each solution at 820 nm using the blank solution as the compensation liquid. Draw a calibration curve with the absorbances of the 3 reference solutions as a function of the quantity of phosphorus in the solutions and read from the curve the quantity of phosphorus in the test solution.

01/2008:20519

2.5.19. *O*-ACETYL IN POLYSACCHARIDE VACCINES

Test solution. Use a volumetric flask with a suitable volume for preparation of a solution containing about 5 mg per millilitre of dry polysaccharide. Transfer the contents of a container quantitatively to the flask and dilute to volume with *water R*. Dilute the solution so that the volumes used in the test contain 30 µg to 600 µg of acetylcholine chloride (*O*-acetyl). Introduce 0.3 mL, 0.5 mL and 1.0 mL in duplicate into 6 tubes (3 reaction solutions and 3 correction solutions).

Reference solutions. Dissolve 0.150 g of *acetylcholine chloride R* in 10 mL of *water R* (stock solution containing 15 g of acetylcholine chloride per litre). Immediately before use, dilute 1 mL of the stock solution to 50 mL with *water R* (working dilution 1 : 300 µg of acetylcholine chloride per millilitre). Immediately before use, dilute 1 mL of the stock solution to 25 mL with *water R* (working dilution 2 : 600 µg of acetylcholine chloride per millilitre). Introduce 0.1 mL and 0.4 mL of working dilution 1 in duplicate (reaction and correction solutions) in 4 tubes and 0.6 mL and 1.0 mL of working dilution 2 in duplicate (reaction and correction solutions) in another 4 tubes.

Prepare a blank using 1 mL of *water R*.

Make up the volume in each tube to 1 mL with *water R*. Add 1.0 mL of *4 M hydrochloric acid* to each of the correction tubes and to the blank. Add 2.0 mL of *alkaline hydroxylamine solution R* to each tube. Allow the reaction to proceed for exactly 2 min and add 1.0 mL of *4 M hydrochloric acid* to each of the reaction tubes. Add 1.0 mL of a 100 g/L solution of *ferric chloride R* in *0.1 M hydrochloric acid* to each tube, stopper the tubes and shake vigorously to remove bubbles.

Measure the absorbance (*2.2.25*) of each solution at 540 nm using the blank as the compensation liquid. For each reaction solution, subtract the absorbance of the corresponding correction solution. Draw a calibration curve from the corrected absorbances for the 4 reference solutions and the corresponding content of acetylcholine chloride and read from the curve the content of acetylcholine chloride in the test solution for each volume tested. Calculate the mean of the 3 values.

1 mole of acetylcholine chloride (181.7 g) is equivalent to 1 mole of *O*-acetyl (43.05 g).

01/2008:20520

2.5.20. HEXOSAMINES IN POLYSACCHARIDE VACCINES

Test solution. Use a volumetric flask with a suitable volume for preparation of a solution containing about 5 mg per millilitre of dry polysaccharide. Transfer the contents of a container quantitatively to the flask and dilute to volume with *water R*. Dilute the solution so that the volumes used in the test contain 125 µg to 500 µg of glucosamine (hexosamine). Introduce 1.0 mL of the diluted solution into a graduated tube.

Reference solutions. Dissolve 60 mg of *glucosamine hydrochloride R* in 100 mL of *water R* (stock solution containing 0.500 g of glucosamine per litre). Introduce 0.25 mL, 0.50 mL, 0.75 mL, and 1.0 mL of the working dilution into 4 graduated tubes.

Prepare a blank using 1 mL of *water R*.

Make up the volume in each tube to 1 mL with *water R*. Add 1 mL of a solution of *hydrochloric acid R* (292 g/L) to each tube. Stopper the tubes and place in a water-bath for 1 h. Cool to room temperature. Add to each tube 0.05 mL of a 5 g/L solution of *thymolphthalein R* in *alcohol R*; add a solution of *sodium hydroxide R* (200 g/L) until a blue colour is obtained and then *1 M hydrochloric acid* until the solution is colourless. Dilute the volume in each tube to 10 mL with *water R* (neutralised hydrolysates).

In a second series of 10 mL graduated tubes, place 1 mL of each neutralised hydrolysate. Add 1 mL of acetylacetone reagent (a mixture, prepared immediately before use, of 1 volume of *acetylacetone R* and 50 volumes of a 53 g/L solution of *anhydrous sodium carbonate R*) to each tube. Stopper the tubes and place in a water-bath at 90 °C for 45 min. Cool to room temperature. Add to each tube 2.5 mL of *alcohol R* and 1.0 mL of dimethylaminobenzaldehyde solution (immediately

before use dissolve 0.8 g of *dimethylaminobenzaldehyde R* in 15 mL of *alcohol R* and add 15 mL of *hydrochloric acid R*) and dilute the volume in each tube to 10 mL with *alcohol R*. Stopper the tubes, mix by inverting and allow to stand in the dark for 90 min. Measure the absorbance (*2.2.25*) of each solution at 530 nm using the blank as the compensation liquid.

Draw a calibration curve from the absorbances for the 4 reference solutions and the corresponding content of hexosamine and read from the curve the quantity of hexosamine in the test solution.

01/2008:20521

2.5.21. METHYLPENTOSES IN POLYSACCHARIDE VACCINES

Test solution. Use a volumetric flask with a suitable volume for preparation of a solution containing about 5 mg per millilitre of dry polysaccharide. Transfer the contents of a container quantitatively to the flask and dilute to volume with *water R*. Dilute the solution so that the volumes used in the test contain 2 µg to 20 µg of rhamnose (methylpentoses). Introduce 0.25 mL, 0.50 mL and 1.0 mL of the diluted solution into 3 tubes.

Reference solutions. Dissolve 0.100 g of *rhamnose R* in 100 mL of *water R* (stock solution containing 1 g of methylpentose per litre). Immediately before use, dilute 1 mL of the stock solution to 50 mL with *water R* (working dilution: 20 mg of methylpentose per litre). Introduce 0.10 mL, 0.25 mL, 0.50 mL, 0.75 mL and 1.0 mL of the working dilution into 5 tubes.

Prepare a blank using 1 mL of *water R*.

Make up the volume in each tube to 1 mL with *water R*. Place the tubes in iced water and add dropwise and with continuous stirring to each tube 4.5 mL of a cooled mixture of 1 volume of *water R* and 6 volumes of *sulfuric acid R*. Warm the tubes to room temperature and place in a water-bath for a few minutes. Cool to room temperature. Add to each tube 0.10 mL of a 30 g/L solution of *cysteine hydrochloride R*, prepared immediately before use. Shake and allow to stand for 2 h.

Measure the absorbance (*2.2.25*) of each solution at 396 nm and at 430 nm using the blank as compensation liquid. For each solution, calculate the difference between the absorbance measured at 396 nm and that measured at 430 nm. Draw a calibration curve from the absorbance differences for the 5 reference solutions and the corresponding content of methylpentose and read from the curve the quantity of methylpentose in the test solution for each volume tested. Calculate the mean of the 3 values.

01/2008:20522

2.5.22. URONIC ACIDS IN POLYSACCHARIDE VACCINES

Test solution. Use a volumetric flask with a suitable volume for preparation of a solution containing about 5 mg per millilitre of dry polysaccharide. Transfer the contents of a container quantitatively to the flask and dilute to volume with *water R*. Dilute the solution so that the volumes used in the test contain 4 µg to 40 µg of glucuronic acid (uronic acids). Introduce 0.25 mL, 0.50 mL and 1.0 mL of the diluted solution into 3 tubes.

Reference solutions. Dissolve 50 mg of *sodium glucuronate R* in 100 mL of *water R* (stock solution containing 0.4 g of glucuronic acid per litre). Immediately before use, dilute 5 mL of the stock solution to 50 mL with *water R* (working dilution: 40 mg of glucuronic acid per litre). Introduce 0.10 mL, 0.25 mL, 0.50 mL, 0.75 mL, and 1.0 mL of the working dilution into 5 tubes.

Prepare a blank using 1 mL of *water R*.

Make up the volume in each tube to 1 mL with *water R*. Place the tubes in iced water and add dropwise and with continuous stirring to each tube 5.0 mL of *borate solution R*. Stopper the tubes and place in a water-bath for 15 min. Cool to room temperature. Add 0.20 mL of a 1.25 g/L solution of *carbazole R* in *ethanol R* to each tube. Stopper the tubes and place in a water-bath for 15 min. Cool to room temperature. Measure the absorbance (*2.2.25*) of each solution at 530 nm using the blank as the compensation liquid.

Draw a calibration curve from the absorbances for the 5 reference solutions and the corresponding content of glucuronic acid and read from the curve the quantity of glucuronic acid in the test solution for each volume tested. Calculate the mean of the 3 values.

01/2008:20523

2.5.23. SIALIC ACID IN POLYSACCHARIDE VACCINES

Test solution. Transfer quantitatively the contents of one or several containers to a volumetric flask of a suitable volume that will give a solution with a known concentration of about 250 µg per millilitre of polysaccharide and dilute to volume with *water R*. Using a syringe, transfer 4.0 mL of this solution to a 10 mL ultrafiltration cell suitable for the passage of molecules of relative molecular mass less than 50 000. Rinse the syringe twice with *water R* and transfer the rinsings to the ultrafiltration cell. Carry out the ultrafiltration, with constant stirring, under *nitrogen R* at a pressure of about 150 kPa. Refill the cell with *water R* each time the volume of liquid in it has decreased to 1 mL and continue until 200 mL has been filtered and the remaining volume in the cell is about 2 mL. Using a syringe, transfer this residual liquid to a 10 mL volumetric flask. Wash the cell with 3 quantities, each of 2 mL, of *water R*, transfer the washings to the flask and dilute to 10.0 mL with *water R* (test solution). In each of 2 test-tubes place 2.0 mL of the test solution.

Reference solutions. Use the reference solutions prescribed in the monograph.

Prepare 2 series of 3 test-tubes, place in the tubes of each series 0.5 mL, 1.0 mL and 1.5 mL respectively, of the reference solution corresponding to the type of vaccine to be examined and adjust the volume in each tube to 2.0 mL with *water R*.

Prepare blank solutions using 2.0 mL of *water R* in each of 2 test-tubes.

To all the tubes add 5.0 mL of *resorcinol reagent R*. Heat at 105 °C for 15 min, cool in cold water and transfer the tubes to a bath of iced water. To each tube add 5 mL of *isoamyl alcohol R* and mix thoroughly. Place in the bath of iced water for 15 min. Centrifuge the tubes and keep them in the bath of iced water until the examination by absorption spectrophotometry. Measure the absorbance (*2.2.25*) of each supernatant solution at 580 nm and 450 nm using *isoamyl alcohol R* as the compensation liquid. For each wavelength, calculate the absorbance as the mean of the values obtained with 2 identical solutions. Subtract the mean value for the blank solution from the mean values obtained for the other solutions.

Draw a graph showing the difference between the absorbances at 580 nm and 450 nm of the reference solutions as a function of the content of *N*-acetylneuraminic acid and read from the graph the quantity of *N*-acetylneuraminic acid (sialic acid) in the test solution.

01/2011:20524

2.5.24. CARBON DIOXIDE IN GASES

Gases absorb light at one or more specific wavelengths. This property is widely used to allow highly selective measurement of their concentrations.

Description and principle of measurement. The concentration of carbon dioxide in other gases can be determined using an infrared analyser.

The infrared analyser generally consists of a light source emitting broadband infrared radiation, an optical device, a sample cell and a detector. The optical device may be positioned either before or after the sample cell and it consists of one or several optical filters, through which the broadband radiation is passed. The optical device in this case is selected for carbon dioxide. The measurement light beam passes through the sample cell and may also pass through a reference cell if the analyser integrates such a feature (some use an electronic system instead of a reference cell).

When carbon dioxide is present in the sample cell, absorption of energy in the measurement light beam will occur according to the Beer-Lambert law and this produces a change in the detector signal. This measurement signal is compared to a reference signal to generate an output related to the concentration of carbon dioxide. The generated signal is linearised in order to obtain the carbon dioxide concentration. To prevent the entry of particles into the sensors, which could cause stray-light phenomena, the apparatus is fitted with a suitable filter.

Required technical specifications. When used for a limit test, the infrared analyser meets the following technical specifications:

- *limit of detection*: (generally defined as a signal-to-noise ratio of 2) maximum 20 per cent of the maximum admissible concentration;
- *repeatability*: maximum relative standard deviation of 10 per cent of the maximum admissible concentration, determined on 6 measurements;
- *linearity*: maximum 10 per cent of the maximum admissible concentration.

The technical specifications must be met in the presence of the other gas impurities in the sample.

01/2011:20525

2.5.25. CARBON MONOXIDE IN GASES

METHOD I

Apparatus. The apparatus (Figure 2.5.25.-1) consists of the following parts connected in series:

- a U-tube (U_1) containing *anhydrous silica gel R* impregnated with *chromium trioxide R*;
- a wash bottle (F_1) containing 100 mL of a 400 g/L solution of *potassium hydroxide R*;
- a U-tube (U_2) containing pellets of *potassium hydroxide R*;
- a U-tube (U_3) containing *diphosphorus pentoxide R* dispersed on previously granulated, fused pumice;
- a U-tube (U_4) containing 30 g of *recrystallised iodine pentoxide R* in granules, previously dried at 200 °C and kept at a temperature of 120 °C (*T*) during the test; the iodine pentoxide is packed in the tube in 1 cm columns separated by 1 cm columns of glass wool to give an effective length of 5 cm;
- a reaction tube (F_2) containing 2.0 mL of *potassium iodide solution R* and 0.15 mL of *starch solution R*.

Method. Flush the apparatus with 5.0 L of *argon R* and, if necessary, discharge the blue colour in the iodide solution by adding the smallest necessary quantity of freshly prepared *0.002 M sodium thiosulfate*. Continue flushing until not more than 0.045 mL of *0.002 M sodium thiosulfate* is required after passage of 5.0 L of *argon R*. Pass the gas to be examined from the cylinder through the apparatus, using the prescribed volume and the flow rate. Flush the last traces of liberated iodine into the reaction tube by passing through the apparatus 1.0 L of *argon R*. Titrate the liberated iodine with *0.002 M sodium thiosulfate*. Carry out a blank test, using the prescribed volume of *argon R*. The difference between the volumes of *0.002 M sodium thiosulfate* used in the titrations is not greater than the prescribed limit.

METHOD II

Gases absorb light at one or more specific wavelengths. This property is widely used to allow highly selective measurement of their concentrations.

Description and principle of measurement. The concentration of carbon monoxide in other gases can be determined using an infrared analyser.

The infrared analyser generally consists of a light source emitting broadband infrared radiation, an optical device, a sample cell and a detector. The optical device may be positioned either before or after the sample cell; it consists of one or several optical filters, through which the broadband radiation is passed. The optical device in this case is selected for carbon monoxide. The measurement light beam passes through the sample cell and may also pass through a reference cell if the analyser integrates such a feature (some use an electronic system instead of a reference cell).

When carbon monoxide is present in the sample cell, absorption of energy in the measurement light beam will occur according to the Beer-Lambert law and this produces a change in the detector signal. This measurement signal is compared to a reference signal to generate an output related to the concentration of carbon monoxide. The generated

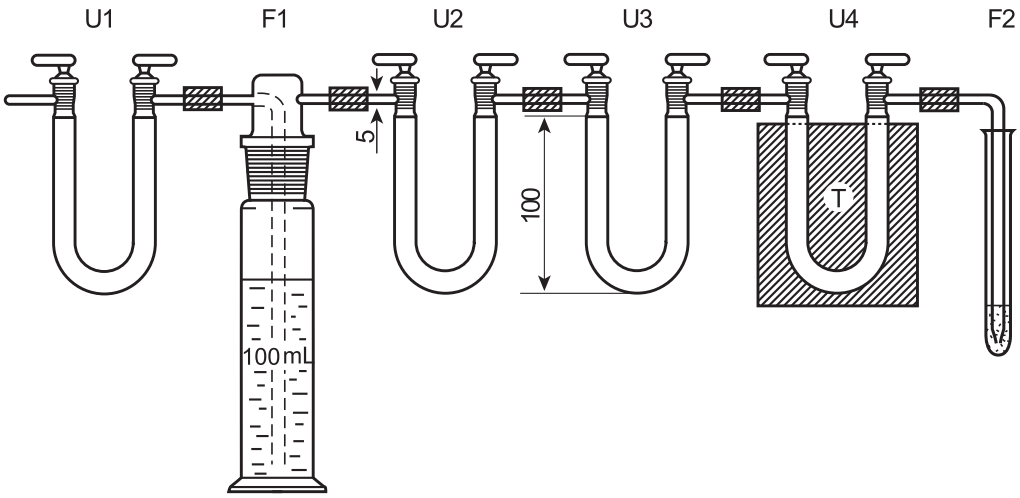

Figure 2.5.25.-1. – *Apparatus for the determination of carbon monoxide*
Dimensions in millimetres

signal is linearised in order to obtain the carbon monoxide concentration. To prevent the entry of particles into the sensors, which could cause stray-light phenomena, the apparatus is fitted with a suitable filter.

Required technical specifications. When used for a limit test, the carbon monoxide infrared analyser meets the following technical specifications:

- *limit of detection*: (generally defined as a signal-to-noise ratio of 2) maximum 20 per cent of the maximum admissible concentration;
- *repeatability*: maximum relative standard deviation of 10 per cent of the maximum admissible concentration, determined on 6 measurements;
- *linearity*: maximum 10 per cent of the maximum admissible concentration.

The technical specifications must be met in the presence of the other gas impurities in the sample.

01/2008:20526

2.5.26. NITROGEN MONOXIDE AND NITROGEN DIOXIDE IN GASES

Nitrogen monoxide and nitrogen dioxide in gases are determined using a chemiluminescence analyser (Figure 2.5.26.-1).

The apparatus consists of the following:

- a device for filtering, checking and controlling the flow of the gas to be examined,
- a converter that reduces nitrogen dioxide to nitrogen monoxide, to determine the combined content of nitrogen monoxide and nitrogen dioxide. The efficiency of the converter has to be verified prior to use,
- a controlled-flow-rate ozone generator; the ozone is produced by high-voltage electric discharges across two electrodes; the ozone generator is supplied with pure oxygen or with dehydrated ambient air and the concentration of ozone obtained must greatly exceed the maximum content of any detectable nitrogen oxides,
- a chamber in which nitrogen monoxide and ozone can react,
- a system for detecting light radiation emitted at a wavelength of 1.2 µm, consisting of a selective optical filter and a photomultiplier tube.

01/2009:20527

2.5.27. OXYGEN IN GASES

Oxygen in gases is determined using a paramagnetic analyser.

The principle of the method is based on the high paramagnetic sensitivity of the oxygen molecule. Oxygen exerts a strong interaction on magnetic fields, which is measured electronically, amplified and converted to a reading of oxygen concentration. The measurement of oxygen concentration is dependent upon the pressure and temperature and, if the analyser is not automatically compensated for variations in temperature and pressure, it must be calibrated immediately prior to use. As the paramagnetic effect of oxygen is linear, the instrument must have a suitable range with a readability of 0.1 per cent or better.

Calibration of the instrument. Make the setting in the following manner:

- set the zero by passing *nitrogen R1* through the instrument until a constant reading is obtained;
- set the scale to 100 per cent by passing *oxygen R* through the instrument at the same flow rate as for *nitrogen R1* until a constant reading is obtained.

Assay. Pass the gas to be examined through the instrument at a constant flow rate until a constant reading is obtained. Record the concentration of oxygen in the gas to be examined.

01/2008:20528

2.5.28. WATER IN GASES

Water in gases is determined using an electrolytic hygrometer, described below.

The measuring cell consists of a thin film of diphosphorus pentoxide, between 2 coiled platinum wires which act as electrodes. The water vapour in the gas to be examined is absorbed by the diphosphorus pentoxide, which is transformed to phosphoric acid, an electrical conductor. A continuous voltage applied across the electrodes produces electrolysis of the water and the regeneration of the diphosphorus pentoxide. The resulting electric current, which is proportional to the water content in the gas to be examined, is measured. This system is self-calibrating since it obeys Faraday's law.

Take a sample of the gas to be examined. Allow the gas to stabilise at room temperature. Purge the cell continuously until a stable reading is obtained. Measure the water content in the gas to be examined, making sure that the temperature is constant throughout the device used to introduce the gas into the apparatus.

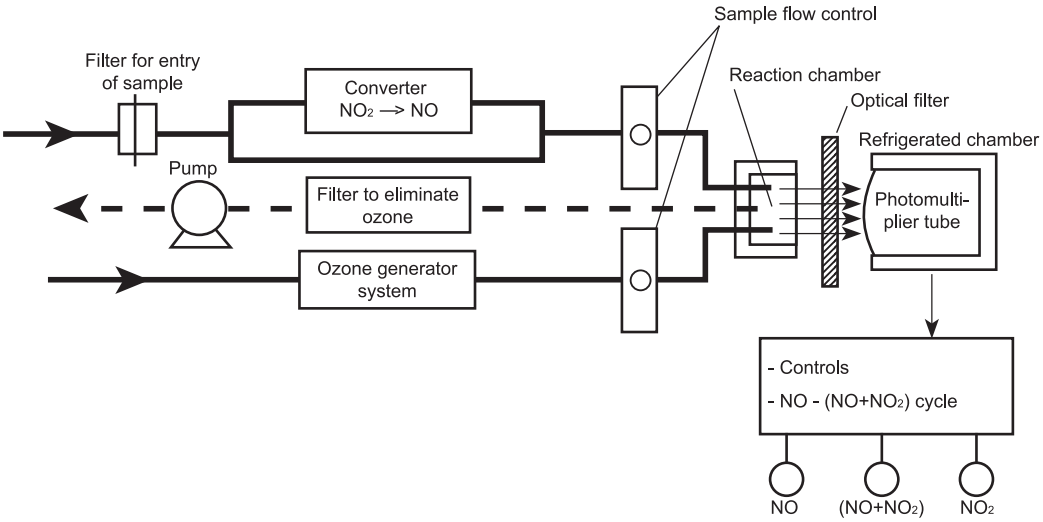

Figure 2.5.26.-1. – *Chemiluminescence analyser*

01/2013:20529

2.5.29. SULFUR DIOXIDE

Introduce 150 mL of *water R* into the flask (*A*) (see Figure 2.5.29.-1) and pass *carbon dioxide R* through the whole system for 15 min at a rate of 100 ± 5 mL/min. To 10 mL of *dilute hydrogen peroxide solution R* add 0.15 mL of a 1 g/L solution of *bromophenol blue R* in *ethanol (20 per cent V/V) R*. Add *0.1 M sodium hydroxide* until a violet-blue colour is obtained, without exceeding the end-point. Place the solution in the test-tube (*D*). Without interrupting the stream of carbon dioxide, remove the funnel (*B*) and introduce through the opening into the flask (*A*) 25.0 g (*m* g) of the substance to be examined with the aid of 100 mL of *water R*. Replace the funnel. Close the tap of the funnel and add 80 mL of *dilute hydrochloric acid R* to the funnel. Open the tap of the funnel to allow the hydrochloric acid solution to flow into the flask, making sure that no sulfur dioxide escapes into the funnel by closing the tap before the last few millilitres of hydrochloric acid solution drain out. Boil for 1 h. Open the tap of the funnel and stop the flow of carbon dioxide and also the heating and the cooling water. Transfer the contents of the test-tube with the aid of a little *water R* to a 200 mL wide-necked, conical flask. Heat on a water-bath for 15 min and allow to cool. Add 0.1 mL of a 1 g/L solution of *bromophenol blue R* in *ethanol (20 per cent V/V) R* and titrate with *0.1 M sodium hydroxide* until the colour changes from yellow to violet-blue (V_1 mL). Carry out a blank titration (V_2 mL).

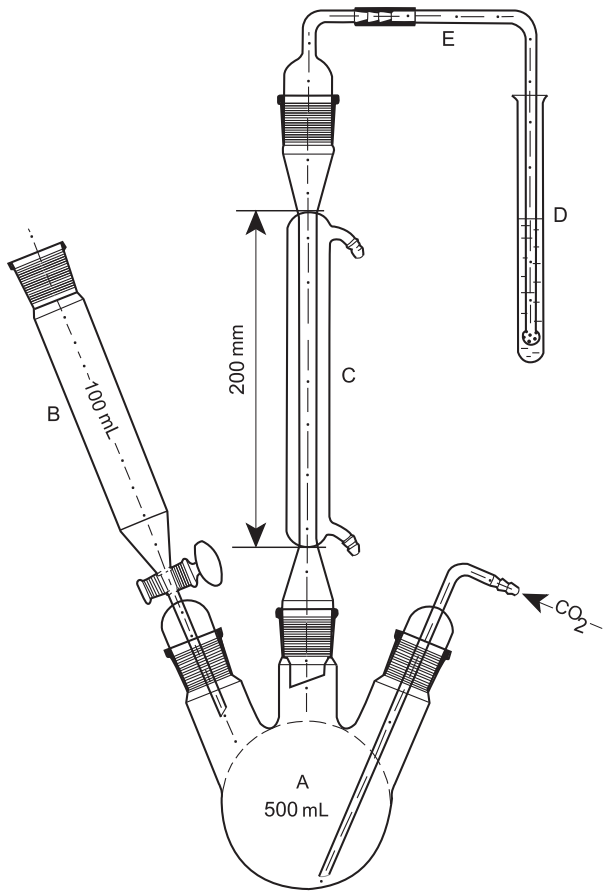

Figure 2.5.29.-1.– *Apparatus for the determination of sulfur dioxide*

Calculate the content of sulfur dioxide in parts per million using the following expression:

$$32\,030 \times (V_1 - V_2) \times \frac{n}{m}$$

n = molarity of the sodium hydroxide solution used as titrant.

01/2008:20530

2.5.30. OXIDISING SUBSTANCES

Transfer 4.0 g to a glass-stoppered, 125 mL conical flask and add 50.0 mL of *water R*. Insert the stopper and swirl for 5 min. Transfer to a glass-stoppered 50 mL centrifuge tube and centrifuge. Transfer 30.0 mL of the clear supernatant to a glass-stoppered 125 mL conical flask. Add 1 mL of *glacial acetic acid R* and 0.5 g to 1.0 g of *potassium iodide R*. Insert the stopper, swirl, and allow to stand for 25 min to 30 min in the dark. Add 1 mL of *starch solution R* and titrate with *0.002 M sodium thiosulfate* until the starch-iodine colour disappears. Carry out a blank determination. Not more than 1.4 mL of *0.002 M sodium thiosulfate* is required (0.002 per cent, calculated as H_2O_2).

1 mL of *0.002 M sodium thiosulfate* is equivalent to 34 µg of oxidising substances, calculated as hydrogen peroxide.

01/2008:20531

2.5.31. RIBOSE IN POLYSACCHARIDE VACCINES

Test solution. Use a volumetric flask with a suitable volume for preparation of a solution containing about 5 mg per millilitre of dry polysaccharide. Transfer the contents of a container quantitatively to the flask and dilute to volume with *water R*. Dilute the solution so that the volumes used in the test contain 2.5 µg to 25 µg of ribose. Introduce 0.20 mL and 0.40 mL of the diluted solution into tubes in triplicate.

Reference solutions. Dissolve 25 mg of *ribose R* in *water R* and dilute to 100.0 mL with the same solvent (stock solution containing 0.25 g/L of ribose). Immediately before use, dilute 1 mL of the stock solution to 10.0 mL with *water R* (working dilution: 25 mg/L of ribose). Introduce 0.10 mL, 0.20 mL, 0.40 mL, 0.60 mL, 0.80 mL and 1.0 mL of the working dilution into 6 tubes.

Prepare a blank using 2 mL of *water R*.

Make up the volume in each tube to 2 mL with *water R*. Shake. Add 2 mL of a 0.5 g/L solution of *ferric chloride R* in *hydrochloric acid R* to each tube. Shake. Add 0.2 mL of a 100 g/L solution of *orcinol R* in *ethanol R*. Place the tubes in a water-bath for 20 min. Cool in iced water. Measure the absorbance (*2.2.25*) of each solution at 670 nm using the blank as the compensation liquid. Draw a calibration curve from the absorbance readings for the 6 reference solutions and the corresponding content of ribose and read from the curve the quantity of ribose in the test solution for each volume tested. Calculate the mean of the 3 values.

01/2008:20532

2.5.32. WATER: MICRO DETERMINATION

PRINCIPLE

The coulometric titration of water is based upon the quantitative reaction of water with sulfur dioxide and iodine in an anhydrous medium in the presence of a base with sufficient buffering capacity. In contrast to the volumetric method described under (*2.5.12*), iodine is produced electrochemically in the reaction cell by oxidation of iodide. The iodine

produced at the anode reacts immediately with the water and the sulfur dioxide contained in the reaction cell. The amount of water in the substance is directly proportional to the quantity of electricity up until the titration end-point. When all of the water in the cell has been consumed, the end-point is reached and thus an excess of iodine appears. 1 mole of iodine corresponds to 1 mole of water, a quantity of electricity of 10.71 C corresponds to 1 mg of water.

Moisture is eliminated from the system by pre-electrolysis. Individual determinations can be carried out successively in the same reagent solution, under the following conditions:

- each component of the test mixture is compatible with the other components,
- no other reactions take place,
- the volume and the water capacity of the electrolyte reagent are sufficient.

Coulometric titration is restricted to the quantitative determination of small amounts of water, a range of 10 µg up to 10 mg of water is recommended.

Accuracy and precision of the method are predominantly governed by the extent to which atmospheric moisture is excluded from the system. Control of the system must be monitored by measuring the amount of baseline drift.

APPARATUS

The apparatus consists of a reaction cell, electrodes and magnetic stirrer. The reaction cell consists of a large anode compartment and a smaller cathode compartment. Depending on the design of the electrode, both compartments can be separated by a diaphragm. Each compartment contains a platinum electrode. Liquid or solubilised samples are introduced through a septum, using a syringe. Alternatively, an evaporation technique may be used in which the sample is heated in a tube (oven) and the water is evaporated and carried into the cell by means of a stream of dry inert gas. The introduction of solid samples into the cell should in general be avoided. However, if it has to be done it is effected through a sealable port; appropriate precautions must be taken to avoid the introduction of moisture from air, such as working in a glove box in an atmosphere of dry inert gas. The analytical procedure is controlled by a suitable electronic device, which also displays the results.

METHOD

Fill the compartments of the reaction cell with *electrolyte reagent for the micro determination of water R* according to the manufacturer's instructions and perform the coulometric titration to a stable end-point. Introduce the prescribed amount of the substance to be examined into the reaction cell, stir for 30 s, if not otherwise indicated in the monograph, and titrate again to a stable end-point. In case an oven is used, the prescribed sample amount is introduced into the tube and heated. After evaporation of the water from the sample into the titration cell, the titration is started. Read the value from the instrument's output and calculate if necessary the percentage or amount of water that is present in the substance. When appropriate to the type of sample and the sample preparation, perform a blank titration.

VERIFICATION OF THE ACCURACY

Between two successive sample titrations, introduce an accurately weighed amount of water in the same order of magnitude as the amount of water in the sample, either as *water R* or in the form of *standard solution for the micro determination of water R*, and perform the coulometric titration. The recovery rate is within the range from 97.5 per cent to 102.5 per cent for an addition of 1000 µg of H_2O and in the range from 90.0 per cent to 110.0 per cent for the addition of 100 µg of H_2O.

01/2008:20533
corrected 6.0

2.5.33. TOTAL PROTEIN

Many of the assay methods described in this chapter can be performed using kits from commercial sources.

METHOD 1

Protein in solution absorbs ultraviolet light at a wavelength of 280 nm, due to the presence of aromatic amino acids, mainly tyrosine and tryptophan, in the protein structure. This property can be used for assay purposes. If the buffer used to dissolve the protein has a high absorbance relative to that of water, an interfering substance is present. This interference may be obviated by using the buffer as compensation liquid but if the interfering substance produces a high absorbance, the results may nevertheless be compromised. At low concentrations, protein adsorbed onto the cell may significantly reduce the content in solution. This can be prevented by preparing samples at higher concentration or by using a non-ionic detergent in the preparation.

Test solution. Dissolve a suitable quantity of the substance to be examined in the prescribed buffer to obtain a solution having a protein concentration between 0.2 mg/mL and 2 mg/mL.

Reference solution. Prepare a solution of a suitable reference substance for the protein to be determined, in the same buffer and at the same protein concentration as the test solution.

Procedure. Keep the test solution, the reference solution and the compensation liquid at the same temperature during the performance of this test. Determine the absorbances (*2.2.25*) of the test solution and the reference solution in quartz cells at 280 nm, using the prescribed buffer as the compensation liquid. The response must be linear in the range of protein concentrations to be assayed to obtain accurate results.

Light scattering. The accuracy of the determination of protein can be diminished by the scattering of light by the test sample. If the proteins in solution exist as particles comparable in size to the wavelength of the measuring light (250 nm to 300 nm), scattering of the light beam results in an apparent increase in absorbance of the test sample. To calculate the absorbance at 280 nm due to light scattering, determine the absorbances of the test solution at wavelengths of 320 nm, 325 nm, 330 nm, 335 nm, 340 nm, 345 nm and 350 nm. Plot the logarithm of the observed absorbance against the logarithm of the wavelength and determine the standard curve best fitting the plotted points by linear regression. Extrapolate the curve to determine the logarithm of the absorbance at 280 nm. The antilogarithm of this value is the absorbance attributed to light scattering. Correct the observed values by subtracting the absorbance attributed to light scattering from the total absorbance at 280 nm to obtain the absorbance value of the protein in solution. Filtration with a 0.2 µm filter that does not adsorb protein or clarification by centrifugation may be performed to reduce the effect of light scattering, especially if the solution is noticeably turbid.

Calculations. Use corrected values for the calculations. Calculate the concentration of protein in the test solution (C_U) from the following equation:

$$C_U = C_S\,(A_U/A_S)$$

where C_S is the concentration of protein in the reference solution and A_U and A_S are the corrected absorbances of the test solution and the reference solution, respectively.

METHOD 2

This method (commonly referred to as the Lowry assay) is based on the reduction by protein of the phosphomolybdotungstic mixed acid chromogen in the phosphomolybdotungstic reagent, which

results in an absorbance maximum at 750 nm. The phosphomolybdotungstic reagent reacts primarily with tyrosine residues in the protein. Colour development reaches a maximum in 20 min to 30 min at room temperature, after which there is a gradual loss of colour. Because the method is sensitive to interfering substances, a procedure for precipitation of the protein from the test sample may be used. Most interfering substances cause a lower colour yield; however, some detergents cause a slight increase in colour. A high salt concentration may cause a precipitate to form. Because different protein species may give different colour response intensities, the reference substance and test protein must be the same. Where separation of interfering substances from the protein in the test sample is necessary, proceed as directed below for interfering substances prior to preparation of the test solution. The effect of interfering substances may be minimised by dilution, provided the concentration of the test protein remains sufficient for accurate measurement.

Use *distilled water R* to prepare all buffers and reagents used for this method.

Test solution. Dissolve a suitable quantity of the substance to be examined in the prescribed buffer to obtain a solution having a concentration within the range of the standard curve. A suitable buffer will produce a solution of pH 10.0 to 10.5.

Reference solutions. Dissolve the reference substance for the protein to be determined in the prescribed buffer. Dilute portions of this solution with the same buffer to obtain not fewer than five reference solutions having protein concentrations evenly spaced over a suitable range situated between 5 µg/mL and 100 µg/mL.

Blank. Use the buffer used to prepare the test solution and the reference solutions.

Copper sulfate reagent. Dissolve 100 mg of *copper sulfate R* and 0.2 g of *sodium tartrate R* in *distilled water R* and dilute to 50 mL with the same solvent. Dissolve 10 g of *anhydrous sodium carbonate R* in *distilled water R* and dilute to 50 mL with the same solvent. Slowly pour the sodium carbonate solution into the copper sulfate solution with mixing. Use within 24 h.

Alkaline copper reagent. Mix 1 volume of copper sulfate reagent, 2 volumes of a 50 g/L solution of *sodium dodecyl sulfate R* and 1 volume of a 32 g/L solution of *sodium hydroxide R*. Store at room temperature and use within 2 weeks.

Diluted phosphomolybdotungstic reagent. Mix 5 mL of *phosphomolybdotungstic reagent R* with 55 mL of *distilled water R*. Store in an amber bottle, at room temperature.

Procedure. To 1.0 mL of each reference solution, of the test solution and of the blank, add 1.0 mL of alkaline copper reagent and mix. Allow to stand for 10 min. Add 0.5 mL of the diluted phosphomolybdotungstic reagent, mix and allow to stand at room temperature for 30 min. Determine the absorbances (*2.2.25*) of the solutions at 750 nm, using the solution from the blank as compensation liquid.

Calculations. The relationship of absorbance to protein concentration is non-linear; however, if the range of concentrations used to prepare the standard curve is sufficiently small, the latter will approach linearity. Plot the absorbances of the reference solutions against the protein concentrations and use linear regression to establish the standard curve. From the standard curve and the absorbance of the test solution, determine the concentration of protein in the test solution.

Interfering substances. In the following procedure, deoxycholate-trichloroacetic acid is added to a test sample to remove interfering substances by precipitation of proteins before determination; this technique can also be used to concentrate proteins from a dilute solution.

Add 0.1 mL of a 1.5 g/L solution of *sodium deoxycholate R* to 1 mL of a solution of the substance to be examined. Mix using a vortex mixer and allow to stand at room temperature for 10 min. Add 0.1 mL of a 720 g/L solution of *trichloroacetic acid R* and mix using a vortex mixer. Centrifuge at 3000 *g* for 30 min, decant the liquid and remove any residual liquid with a pipette. Redissolve the protein pellet in 1 mL of alkaline copper reagent.

METHOD 3

This method (commonly referred to as the Bradford assay) is based on the absorption shift from 470 nm to 595 nm observed when the acid blue 90 dye binds to protein. The acid blue 90 dye binds most readily to arginine and lysine residues in the protein which can lead to variation in the response of the assay to different proteins. The protein used as reference substance must therefore be the same as the protein to be determined. There are relatively few interfering substances, but it is preferable to avoid detergents and ampholytes in the test sample. Highly alkaline samples may interfere with the acidic reagent.

Use *distilled water R* to prepare all buffers and reagents used for this method.

Test solution. Dissolve a suitable quantity of the substance to be examined in the prescribed buffer to obtain a solution having a concentration within the range of the standard curve.

Reference solutions. Dissolve the reference substance for the protein to be determined in the prescribed buffer. Dilute portions of this solution with the same buffer to obtain not fewer than five reference solutions having protein concentrations evenly spaced over a suitable range situated between 0.1 mg/mL and 1 mg/mL.

Blank. Use the buffer used to prepare the test solution and the reference solutions.

Acid blue 90 reagent. Dissolve 0.10 g of *acid blue 90 R* in 50 mL of *alcohol R*. Add 100 mL of *phosphoric acid R*, dilute to 1000 mL with *distilled water R* and mix. Filter the solution and store in an amber bottle at room temperature. Slow precipitation of the dye occurs during storage. Filter the reagent before using.

Procedure. Add 5 mL of acid blue 90 reagent to 0.100 mL of each reference solution, of the test solution and of the blank. Mix by inversion. Avoid foaming, which will lead to poor reproducibility. Determine the absorbances (*2.2.25*) of the standard solutions and of the test solution at 595 nm, using the blank as compensation liquid. Do not use quartz (silica) spectrophotometer cells because the dye binds to this material.

Calculations. The relationship of absorbance to protein concentration is non-linear; however, if the range of concentrations used to prepare the standard curve is sufficiently small, the latter will approach linearity. Plot the absorbances of the reference solutions against protein concentrations and use linear regression to establish the standard curve. From the standard curve and the absorbance of the test solution, determine the concentration of protein in the test solution.

METHOD 4

This method (commonly referred to as the bicinchoninic acid or BCA assay) is based on reduction of the cupric (Cu^{2+}) ion to cuprous (Cu^{1+}) ion by protein. The bicinchoninic acid reagent is used to detect the cuprous ion. Few substances interfere with the reaction. When interfering substances are present their effect may be minimised by dilution, provided that the concentration of the protein to be determined remains sufficient for accurate measurement. Alternatively, the protein precipitation procedure given in Method 2 may be used to remove interfering substances. Because different protein species may give different colour response intensities, the reference protein and protein to be determined must be the same.

Use *distilled water R* to prepare all buffers and reagents used for this method.

Test solution. Dissolve a suitable quantity of the substance to be examined in the prescribed buffer to obtain a solution having a concentration within the range of the concentrations of the reference solutions.

Reference solutions. Dissolve the reference substance for the protein to be determined in the prescribed buffer. Dilute portions of this solution with the same buffer to obtain not fewer than five reference solutions having protein concentrations evenly spaced over a suitable range situated between 10 µg/mL and 1200 µg/mL.

Blank. Use the buffer used to prepare the test solution and the reference solutions.

BCA reagent. Dissolve 10 g of *disodium bicinchoninate R*, 20 g of *sodium carbonate monohydrate R*, 1.6 g of *sodium tartrate R*, 4 g of *sodium hydroxide R*, and 9.5 g of *sodium hydrogen carbonate R* in *distilled water R*. Adjust, if necessary, to pH 11.25 with a solution of *sodium hydroxide R* or a solution of *sodium hydrogen carbonate R*. Dilute to 1000 mL with *distilled water R* and mix.

Copper-BCA reagent. Mix 1 mL of a 40 g/L solution of *copper sulfate R* and 50 mL of BCA reagent.

Procedure. Mix 0.1 mL of each reference solution, of the test solution and of the blank with 2 mL of the copper-BCA reagent. Incubate the solutions at 37 °C for 30 min, note the time and allow the mixtures to cool to room temperature. Within 60 min of the end of incubation, determine the absorbances (*2.2.25*) of the reference solutions and of the test solution in quartz cells at 562 nm, using the blank as compensation liquid. After the solutions have cooled to room temperature, the colour intensity continues to increase gradually.

Calculations. The relationship of absorbance to protein concentration is non-linear; however, if the range of concentrations used to prepare the standard curve is sufficiently small, the latter will approach linearity. Plot the absorbances of the reference solutions against protein concentrations and use linear regression to establish the standard curve. From the standard curve and the absorbance of the test solution, determine the concentration of protein in the test solution.

METHOD 5

This method (commonly referred to as the biuret assay) is based on the interaction of cupric (Cu^{2+}) ion with protein in alkaline solution and resultant development of absorbance at 545 nm. This test shows minimal difference between equivalent IgG and albumin samples. Addition of the sodium hydroxide and the biuret reagent as a combined reagent, insufficient mixing after the addition of the sodium hydroxide, or an extended time between the addition of the sodium hydroxide solution and the addition of the biuret reagent will give IgG samples a higher response than albumin samples. The trichloroacetic acid method used to minimise the effects of interfering substances also can be used to determine the protein content in test samples at concentrations below 500 µg/mL.

Use *distilled water R* to prepare all buffers and reagents used for this method.

Test solution. Dissolve a suitable quantity of the substance to be examined in a 9 g/L solution of *sodium chloride R* to obtain a solution having a concentration within the range of the concentrations of the reference solutions.

Reference solutions. Dissolve the reference substance for the protein to be determined in a 9 g/L solution of *sodium chloride R*. Dilute portions of this solution with a 9 g/L solution of *sodium chloride R* to obtain not fewer than three reference solutions having protein concentrations evenly spaced over a suitable range situated between 0.5 mg/mL and 10 mg/mL.

Blank. Use a 9 g/L solution of *sodium chloride R*.

Biuret reagent. Dissolve 3.46 g of *copper sulfate R* in 10 mL of hot *distilled water R*, and allow to cool (Solution A). Dissolve 34.6 g of *sodium citrate R* and 20.0 g of *anhydrous sodium carbonate R* in 80 mL of hot *distilled water R*, and allow to cool (Solution B). Mix solutions A and B and dilute to 200 mL with *distilled water R*. Use within 6 months. Do not use the reagent if it develops turbidity or contains any precipitate.

Procedure. To one volume of the test solution add an equal volume of a 60 g/L solution of *sodium hydroxide R* and mix. Immediately add biuret reagent equivalent to 0.4 volumes of the test solution and mix rapidly. Allow to stand at a temperature between 15 °C and 25 °C for not less than 15 min. Within 90 min of addition of the biuret reagent, determine the absorbances (*2.2.25*) of the reference solutions and of the test solution at the maximum at 545 nm, using the blank as compensation liquid. Any solution that develops turbidity or a precipitate is not acceptable for calculation of protein concentration.

Calculations. The relationship of absorbance to protein concentration is approximately linear within the indicated range of protein concentrations for the reference solutions. Plot the absorbances of the reference solutions against protein concentrations and use linear regression to establish the standard curve. Calculate the correlation coefficient for the standard curve. A suitable system is one that yields a line having a correlation coefficient not less than 0.99. From the standard curve and the absorbance of the test solution, determine the concentration of protein in the test solution.

Interfering substances. To minimise the effect of interfering substances, the protein can be precipitated from the test sample as follows: add 0.1 volumes of a 500 g/L solution of *trichloroacetic acid R* to 1 volume of a solution of the test sample, withdraw the supernatant layer and dissolve the precipitate in a small volume of *0.5 M sodium hydroxide*. Use the solution obtained to prepare the test solution.

METHOD 6

This fluorimetric method is based on the derivatisation of the protein with *o*-phthalaldehyde, which reacts with the primary amines of the protein (*N*-terminal amino acid and the ε-amino group of lysine residues). The sensitivity of the assay can be increased by hydrolysing the protein before adding *o*-phthalaldehyde. Hydrolysis makes the α-amino group of the constituent amino acids available for reaction with the phthalaldehyde reagent. The method requires very small quantities of the protein. Primary amines, such as tris(hydroxymethyl)aminomethane and amino acid buffers, react with phthalaldehyde and must be avoided or removed. Ammonia at high concentrations reacts with phthalaldehyde. The fluorescence obtained when amine reacts with phthalaldehyde can be unstable. The use of automated procedures to standardise this procedure may improve the accuracy and precision of the test.

Use *distilled water R* to prepare all buffers and reagents used for this method.

Test solution. Dissolve a suitable quantity of the substance to be examined in a 9 g/L solution of *sodium chloride R* to obtain a solution having a concentration within the range of the concentrations of the reference solutions. Adjust the solution to pH 8 to 10.5 before addition of the phthalaldehyde reagent.

Reference solutions. Dissolve the reference substance for the protein to be determined in a 9 g/L solution of *sodium chloride R*. Dilute portions of this solution with a 9 g/L solution of *sodium chloride R* to obtain not fewer than five reference solutions having protein concentrations evenly spaced over a suitable range situated between 10 µg/mL and 200 µg/mL. Adjust the solutions to pH 8 to 10.5 before addition of the phthalaldehyde reagent.

Blank solution. Use a 9 g/L solution of *sodium chloride R*.

Borate buffer solution. Dissolve 61.83 g of *boric acid R* in *distilled water R* and adjust to pH 10.4 with a solution of *potassium hydroxide R*. Dilute to 1000 mL with *distilled water R* and mix.

Phthalaldehyde stock solution. Dissolve 1.20 g of *phthalaldehyde R* in 1.5 mL of *methanol R*, add 100 mL of borate buffer solution and mix. Add 0.6 mL of a 300 g/L solution of *macrogol 23 lauryl ether R* and mix. Store at room temperature and use within 3 weeks.

Phthalaldehyde reagent. To 5 mL of phthalaldehyde stock solution add 15 µL of *2-mercaptoethanol R*. Prepare at least 30 min before use. Use within 24 h.

Procedure. Mix 10 µL of the test solution and of each of the reference solutions with 0.1 mL of phthalaldehyde reagent and allow to stand at room temperature for 15 min. Add 3 mL of *0.5 M sodium hydroxide* and mix. Determine the fluorescent intensities (*2.2.21*) of solutions from the reference solutions and from the test solution at an excitation wavelength of 340 nm and an emission wavelength between 440 and 455 nm. Measure the fluorescent intensity of a given sample only once, since irradiation decreases the fluorescence intensity.

Calculations. The relationship of fluorescence to protein concentration is linear. Plot the fluorescent intensities of the reference solutions against protein concentrations and use linear regression to establish the standard curve. From the standard curve and the fluorescent intensity of the test solution, determine the concentration of protein in the test solution.

METHOD 7

This method is based on nitrogen analysis as a means of protein determination. Interference caused by the presence of other nitrogen-containing substances in the test sample can affect the determination of protein by this method. Nitrogen analysis techniques destroy the test sample during the analysis but are not limited to protein presentation in an aqueous environment.

Procedure A. Proceed as prescribed for the determination of nitrogen by sulfuric acid digestion (*2.5.9*) or use commercial instrumentation for Kjeldahl nitrogen assay.

Procedure B. Commercial instrumentation is available for nitrogen analysis. Most nitrogen analysis instruments use pyrolysis (i.e. combustion of the sample in oxygen at temperatures approaching 1000 °C), which produces nitric oxide (NO) and other oxides of nitrogen (NO_x) from the nitrogen present in the substance to be examined. Some instruments convert the nitric oxides to nitrogen gas, which is quantified using a thermal-conductivity detector. Other instruments mix nitric oxide (NO) with ozone (O_3) to produce excited nitrogen dioxide (NO_2*), which emits light when it decays and can be quantified with a chemiluminescence detector. A protein reference material that is relatively pure and is similar in composition to the test proteins is used to optimise the injection and pyrolysis parameters and to evaluate consistency in the analysis.

Calculations. The protein concentration is calculated by dividing the nitrogen content of the sample by the known nitrogen content of the protein. The known nitrogen content of the protein can be determined from the chemical composition of the protein or by comparison with a suitable reference substance.

01/2008:20534

2.5.34. ACETIC ACID IN SYNTHETIC PEPTIDES

Examine by liquid chromatography (*2.2.29*).

Test solution. Prepare as described in the monograph. The concentration of peptide in the solution may be adapted, depending on the expected amount of acetic acid in the sample.

Reference solution. Prepare a 0.10 g/L solution of *glacial acetic acid R* in a mixture of 5 volumes of mobile phase B and 95 volumes of mobile phase A.

The chromatographic procedure may be carried out using:

- a stainless steel column 0.25 m long and 4.6 mm in internal diameter packed with *octadecylsilyl silica gel for chromatography R* (5 µm),
- as mobile phase at a flow rate of 1.2 mL/min:

  Mobile phase A. Dilute 0.7 mL of *phosphoric acid R* to 1000 mL with *water R*; adjust the pH to 3.0 with *strong sodium hydroxide solution R*,

  Mobile phase B. *Methanol R2*,

Time (min)	Mobile phase A (per cent *V/V*)	Mobile phase B (per cent *V/V*)
0 - 5	95	5
5 - 10	95 → 50	5 → 50
10 - 20	50	50
20 - 22	50 → 95	50 → 5
22 - 30	95	5

- as detector a spectrophotometer set at 210 nm.

Inject 10 µL of the reference solution and 10 µL of the test solution. In the chromatograms obtained, the peak corresponding to acetic acid has a retention time of 3-4 min. The baseline presents a steep rise after the start of the linear gradient, which corresponds to the elution of the peptide from the column. Determine the content of acetic acid in the peptide.

01/2011:20535

2.5.35. NITROUS OXIDE IN GASES

Gases absorb light at one or more specific wavelengths. This property is widely used to allow highly selective measurement of their concentrations.

Description and principle of measurement. The concentration of nitrous oxide in other gases can be determined using an infrared analyser.

The infrared analyser generally consists of a light source emitting broadband infrared radiation, an optical device, a sample cell and a detector. The optical device may be positioned either before or after the sample cell and it consists of one or several optical filters, through which the broadband radiation is passed. The optical device in this case is selected for nitrous oxide. The measurement light beam passes through the sample cell and may also pass through a reference cell if the analyser integrates such a feature (some use an electronic system instead of a reference cell).

When nitrous oxide is present in the sample cell, absorption of energy in the measurement light beam will occur according to the Beer-Lambert law and this produces a change in the detector signal. This measurement signal is compared to a reference signal to generate an output related to the concentration of nitrous oxide. The generated signal is linearised in order to obtain the nitrous oxide concentration. To prevent the entry of particles into the sensors, which could cause stray-light phenomena, the apparatus is fitted with a suitable filter.

01/2008:20536

2.5.36. ANISIDINE VALUE

The anisidine value is defined as 100 times the optical density measured in a 1 cm cell of a solution containing 1 g of the substance to be examined in 100 mL of a mixture of solvents and reagents according to the following method.

Carry out the operations as rapidly as possible, avoiding exposure to actinic light.

Test solution (a). Dissolve 0.500 g of the substance to be examined in *trimethylpentane R* and dilute to 25.0 mL with the same solvent.

Test solution (b). To 5.0 mL of test solution (a) add 1.0 mL of a 2.5 g/L solution of *p-anisidine R* in *glacial acetic acid R*, shake and store protected from light.

Reference solution. To 5.0 mL of *trimethylpentane R* add 1.0 mL of a 2.5 g/L solution of *p-anisidine R* in *glacial acetic acid R*, shake and store protected from light.

Measure the absorbance (*2.2.25*) of test solution (a) at the maximum at 350 nm using *trimethylpentane R* as the compensation liquid. Measure the absorbance of test solution (b) at 350 nm exactly 10 min after its preparation, using the reference solution as the compensation liquid.

Calculate the anisidine value from the expression:

$$\frac{25 \times (1.2A_1 - A_2)}{m}$$

A_1 = absorbance of test solution (b) at 350 nm,

A_2 = absorbance of test solution (a) at 350 nm,

m = mass of the substance to be examined in test solution (a), in grams.

04/2011:20537

2.5.37. METHYL, ETHYL AND ISOPROPYL METHANESULFONATE IN METHANESULFONIC ACID

The following method has been validated for the methyl, ethyl and isopropyl esters of methanesulfonic acid at concentrations in the range of 0.5 ppm to 100 ppm.

If it is intended to be used to determine levels of methanesulfonic acid esters outside this validated range, for example in early steps of the synthesis prior to their removal, the concentration of the test solution has to be adjusted accordingly.

Gas chromatography (*2.2.28*) coupled with mass spectrometry (*2.2.43*).

Internal standard solution. Dilute 7 µL of *butyl methanesulfonate CRS* (BMS) to 10.0 mL with *methylene chloride R*. Dilute 10 µL of the solution to 100.0 mL with *methylene chloride R*.

Test solution. Add 0.74 g of the substance to be examined to 10.0 mL of *water R* and extract with 10.0 mL of the internal standard solution. Allow to separate and transfer the organic layer to a vial containing *anhydrous sodium sulfate R*. Shake and filter.

Reference solution (a). Dissolve 50 mg each of *methyl methanesulfonate R* (MMS), *ethyl methanesulfonate R* (EMS) and *isopropyl methanesulfonate R* (IMS) in the internal standard solution and dilute to 50.0 mL with the same solution. Dilute 74 µL of the solution to 10.0 mL with the internal standard solution. Dilute 100 µL of this solution to 10.0 mL with the internal standard solution.

Reference solution (b). Dilute 3.0 mL of reference solution (a) to 10.0 mL with the internal standard solution.

Column:
- *material*: fused silica;
- *size*: *l* = 15 m, Ø = 0.25 mm;
- *stationary phase*: *poly(dimethyl)siloxane R* (film thickness 1 µm).

Carrier gas: *helium for chromatography R.*

Flow rate: 1 mL/min.

Pulsed splitless: 250 kPa, 0.25 min.

Temperature:

		Time (min)	Temperature (°C)
Column		0 - 1	55
		1 - 9	55 → 135
Injection port			240
Detector:	transfer line		280
	source		230
	analyser		150

Detection: mass spectrometer as described below; adjust the detector settings so as to comply with the system suitability criteria:
- quadrupole mass spectrometer equipped with an electron impact ionisation mode (70 eV);
- mass spectrometer parameters for the fragmentometric mode (single-ion monitoring (SIM)) set as follows:

Substance	*m/z*	Duration of monitoring
Butyl methanesulfonate (BMS)	56	t_R between 7.0 min and 9.0 min
Methyl methanesulfonate (MMS)	80	t_R between 2.0 min and 3.5 min
Ethyl methanesulfonate (EMS)	79	t_R between 4.0 min and 4.7 min
Isopropyl methanesulfonate (IMS)	123	t_R between 4.7 min and 5.5 min

Injection: 2 µL.

Relative retention with reference to the internal standard (BMS) (retention time = about 7.6 min): MMS = about 0.3; EMS = about 0.5; IMS = about 0.6.

System suitability:
- *resolution*: minimum 3.0 between the peaks due to EMS and IMS in the chromatogram obtained with reference solution (a);
- *signal-to-noise ratio*: minimum 10 for the peaks due to MMS, EMS and IMS in the chromatogram obtained with reference solution (b).

Calculate the content of MMS, EMS or IMS in parts per million using the following expression:

$$\frac{A_2 \times I_1 \times W_1 \times C \times 0.148}{A_1 \times I_2 \times W_2}$$

A_1 = area of the peak due to MMS, EMS or IMS in the chromatogram obtained with reference solution (a);

A_2 = area of the peak due to MMS, EMS or IMS in the chromatogram obtained with the test solution;

C = percentage content of MMS, EMS or IMS;

I_1 = area of the peak due to the internal standard in the chromatogram obtained with reference solution (a);

I_2 = area of the peak due to the internal standard in the chromatogram obtained with the test solution;

W_1 = mass of MMS, EMS or IMS used to prepare reference solution (a), in milligrams;

W_2 = mass of the substance to be examined in the test solution, in milligrams;

0.148 = dilution factor.

01/2012:20538

2.5.38. METHYL, ETHYL AND ISOPROPYL METHANESULFONATE IN ACTIVE SUBSTANCES

The following general method has been validated for the determination of methyl, ethyl and isopropyl esters of methanesulfonic acid (in concentrations between 0.2 ppm and 5 ppm) in betahistine mesilate.

If it is intended to use the method for other active substances, particularly those that contain different concentrations of the methanesulfonic acid esters, the concentrations of the test solution and reference solution must be adjusted accordingly and the method must be suitably validated.

METHOD

Head-space gas chromatography (*2.2.28*) coupled with mass spectrometry (*2.2.43*). *Prepare the test solution and reference solutions immediately before use.*

Solvent mixture: *water R*, *acetonitrile R* (20:80 *V/V*).

Solution A. Dissolve 30 mg of *anhydrous sodium thiosulfate R* and 60.0 g of *sodium iodide R* in *water R* and dilute to 50.0 mL with the same solvent.

Internal standard solution. Dilute 10 µL of *butyl methanesulfonate CRS* (BMS) to 10.0 mL with the solvent mixture. Dilute 20 µL of the solution to 10.0 mL with the solvent mixture. Dilute 10.0 mL of this solution to 100.0 mL with the solvent mixture.

Test solution. Weigh 25.0 mg of the substance to be examined into a 20 mL headspace vial, add 0.50 mL of solution A and 0.50 mL of the internal standard solution, then seal the vial immediately with a polytetrafluoroethylene-coated silicon membrane and an aluminium cap. *Following the derivatisation reaction, a precipitate may be observed, however this does not affect the validity of the quantification.*

Reference solution (a). Dissolve 25.0 mg each of *methyl methanesulfonate R* (MMS), *ethyl methanesulfonate R* (EMS) and *isopropyl methanesulfonate R* (IMS) in *toluene R* and dilute to 5.0 mL with the same solvent. Dilute 50 µL of the solution to 25.0 mL with the internal standard solution.

Reference solution (b). Dilute 20 µL of reference solution (a) to 20.0 mL with the internal standard solution. Introduce 0.50 mL of this solution and 0.50 mL of solution A into a 20 mL headspace vial and seal the vial immediately with a polytetrafluoroethylene-coated silicon membrane and an aluminium cap.

Reference solution (c). Dilute 500 µL of reference solution (a) to 20.0 mL with the internal standard solution. Introduce 0.50 mL of this solution and 0.50 mL of solution A into a 20 mL headspace vial and seal the vial immediately with a polytetrafluoroethylene-coated silicon membrane and an aluminium cap.

Column:

- *material*: fused silica;
- *size*: *l* = 30 m, Ø = 0.25 mm;
- *stationary phase*: *polar-deactivated polyethyleneglycol R* (film thickness 1 µm).

Carrier gas: *helium for chromatography R*.

Flow rate: 0.5 mL/min.

Split ratio: 1:20.

Static head-space conditions that may be used:

- *equilibration temperature*: 60 °C;
- *equilibration time*: 30 min;
- *transfer-line temperature*: 120 °C.

Temperature:

		Time (min)	Temperature (°C)
Column		0 - 1	40
		1 - 10	40 → 130
Injection port			220
Detector	transfer line		280
	source		250
	analyser		200

At the end of analysis the temperature of the column is raised to 240 °C and maintained at this temperature for 7 min.

Detection: mass spectrometer as described below; adjust the detector settings so as to comply with the system suitability criteria; alternatively a suitable electron-capture detector may be used:

- quadrupole mass spectrometer equipped with an electron impact ionisation mode (70 eV);
- mass spectrometer parameters for the fragmentometric mode (single-ion monitoring (SIM)) set as follows:

Substance	Quantitation ion (*m/z*)	Qualification ion (*m/z*)
Butyl iodide (BuI)*	184	127
Methyl iodide (MeI)*	142	127
Ethyl iodide (EtI)*	156	127
Isopropyl iodide (iPrI)*	170	127
* formed from BMS, MMS, EMS and IMS in the derivatisation reaction.		

Injection: 1 mL of the gas phase of the test solution and reference solutions (b) and (c).

Relative retention with reference to the internal standard (BuI) (retention time = about 8.5 min): MeI = about 0.51; EtI = about 0.63; iPrI = about 0.68.

System suitability:

- *resolution*: minimum 1.5 between the peaks due to EtI and iPrI in the chromatogram obtained with reference solution (c);
- *signal-to-noise ratio*: minimum 10 for the peak due to each alkyl iodide in the chromatogram obtained with reference solution (b).

Calculate the content in parts per million of each alkyl methanesulfonate using the following expression:

$$\frac{A_2 \times I_1 \times W_1 \times C \times 0.05}{A_1 \times I_2 \times W_2}$$

A_1 = area of the peak due to each alkyl iodide in the chromatogram obtained with reference solution (c);

A_2 = area of the peak due to each alkyl iodide in the chromatogram obtained with the test solution;

C = percentage content of each ester;

I_1 = area of the peak due to the internal standard in the chromatogram obtained with reference solution (c);

I_2 = area of the peak due to the internal standard in the chromatogram obtained with the test solution;

W_1 = mass of each ester used to prepare reference solution (a), in milligrams;

W_2 = mass of the substance to be examined in the test solution, in milligrams;

0.05 = dilution factor.

04/2013:20539

2.5.39. METHANESULFONYL CHLORIDE IN METHANESULFONIC ACID

The following method has been validated for the determination of methanesulfonyl chloride in methanesulfonic acid at concentrations in the range of 0.05 ppm to 50 ppm.

Gas chromatography (*2.2.28*) coupled with mass spectrometry (*2.2.43*).

Internal standard solution. Dissolve 7 µL of *butyl methanesulfonate CRS* (BMS) in *methylene chloride R* and dilute to 10.0 mL with the same solvent. Dilute 5.0 mL of this solution to 50.0 mL with *methylene chloride R*.

Test solution. To 5 mL of *water R*, add 7.4 g of the substance to be examined and mix slowly. After cooling, add 5.0 mL of *methylene chloride R* and 100 µL of the internal standard solution and shake. Allow to separate and transfer the organic layer to a vial containing 1 g of *anhydrous sodium sulfate R*. Repeat the extraction twice with 5.0 mL of *methylene chloride R* each time, combine the organic layers and filter.

Reference solution (a). Dissolve 50.0 mg of *methanesulfonyl chloride R* in *methylene chloride R* and dilute to 10.0 mL with the same solvent. Dilute 1.0 mL of the solution to 10.0 mL with *methylene chloride R*. Dilute 300 µL of this solution to 10.0 mL with *methylene chloride R*.

Reference solution (b). Dilute 500 µL of reference solution (a) and 100 µL of the internal standard solution to 15.0 mL with *methylene chloride R*.

Reference solution (c). Dilute 25 µL of reference solution (a) and 100 µL of the internal standard solution to 15.0 mL with *methylene chloride R*.

Column:

- *material*: fused silica;
- *size*: *l* = 15 m, Ø = 0.25 mm;
- *stationary phase*: *poly(dimethyl)siloxane R* (film thickness 1 µm).

Carrier gas: *helium for chromatography R*.

Flow rate: 1 mL/min.

Pulsed splitless: 60 kPa, 0.1 min.

Temperature:

		Time (min)	Temperature (°C)
Column		0 - 4	40
		4 - 8	40 → 200
Injection port			240
Detector:	transfer line		280
	source		230
	analyser		150

At the end of analysis the temperature of the column is raised to 270 °C and maintained at this temperature for 8 min.

Detection: mass spectrometer as described below; adjust the detector settings so as to comply with the system suitability criteria:

- quadrupole mass spectrometer equipped with an electron impact ionisation mode (70 eV);
- mass spectrometer parameters for the fragmentometric mode (single-ion monitoring (SIM)) set as follows:

Substance	*m/z*	Duration of monitoring
Methanesulfonyl chloride	79	t_R between 3.3 min and 6.0 min
Butyl methanesulfonate (BMS)	56	t_R between 6.0 min and 8.0 min

Injection: 5 µL of the test solution, reference solutions (b) and (c), the internal standard solution and *methylene chloride R*.

Relative retention with reference to the internal standard (BMS) (retention time = about 7.2 min): methanesulfonyl chloride = about 0.68.

System suitability:

- in the chromatogram obtained with the internal standard solution, there is no peak with the same retention time as methanesulfonyl chloride;
- *resolution*: minimum 5.0 between the peaks due to methanesulfonyl chloride and BMS in the chromatogram obtained with reference solution (b);
- *signal-to-noise ratio*: minimum 10 for the peak due to methanesulfonyl chloride in the chromatogram obtained with reference solution (c).

Calculate the content of methanesulfonyl chloride in parts per million using the following expression:

$$\frac{A_2 \times I_1 \times W_1 \times C \times 1.5}{A_1 \times I_2 \times W_2}$$

A_1 = area of the peak due to methanesulfonyl chloride in the chromatogram obtained with reference solution (b);

A_2 = area of the peak due to methanesulfonyl chloride in the chromatogram obtained with the test solution;

C = percentage content of methanesulfonyl chloride;

I_1 = area of the peak due to BMS in the chromatogram obtained with reference solution (b);

I_2 = area of the peak due to BMS in the chromatogram obtained with the test solution;

W_1 = mass of methanesulfonyl chloride used to prepare reference solution (a), in milligrams;

W_2 = mass of the sample in the test solution, in milligrams;

1.5 = dilution factor.

2.6. BIOLOGICAL TESTS

04/2011:20601
corrected 7.7

2.6.1. STERILITY[(1)]

The test is applied to substances, preparations or articles which, according to the Pharmacopoeia, are required to be sterile. However, a satisfactory result only indicates that no contaminating micro-organism has been found in the sample examined in the conditions of the test.

PRECAUTIONS AGAINST MICROBIAL CONTAMINATION

The test for sterility is carried out under aseptic conditions. In order to achieve such conditions, the test environment has to be adapted to the way in which the sterility test is performed. The precautions taken to avoid contamination are such that they do not affect any micro-organisms which are to be revealed in the test. The working conditions in which the tests are performed are monitored regularly by appropriate sampling of the working area and by carrying out appropriate controls.

CULTURE MEDIA AND INCUBATION TEMPERATURES

Media for the test may be prepared as described below, or equivalent commercial media may be used provided that they comply with the growth promotion test.

The following culture media have been found to be suitable for the test for sterility. Fluid thioglycollate medium is primarily intended for the culture of anaerobic bacteria; however, it will also detect aerobic bacteria. Soya-bean casein digest medium is suitable for the culture of both fungi and aerobic bacteria.

Fluid thioglycollate medium

L-Cystine	0.5 g
Agar	0.75 g
Sodium chloride	2.5 g
Glucose monohydrate/anhydrous	5.5 g/5.0 g
Yeast extract (water-soluble)	5.0 g
Pancreatic digest of casein	15.0 g
Sodium thioglycollate or	0.5 g
Thioglycollic acid	0.3 mL
Resazurin sodium solution (1 g/L of resazurin sodium), freshly prepared	1.0 mL
Water R	1000 mL

pH after sterilisation 7.1 ± 0.2

Mix the L-cystine, agar, sodium chloride, glucose, water-soluble yeast extract and pancreatic digest of casein with the *water R* and heat until solution is effected. Dissolve the sodium thioglycollate or thioglycollic acid in the solution and, if necessary, add *1 M sodium hydroxide* so that, after sterilisation, the solution will have a pH of 7.1 ± 0.2. If filtration is necessary, heat the solution again without boiling and filter while hot through moistened filter paper. Add the resazurin sodium solution, mix and place the medium in suitable vessels which provide a ratio of surface to depth of medium such that not more than the upper half of the medium has undergone a colour change indicative of oxygen uptake at the end of the incubation period. Sterilise using a validated process. If the medium is stored, store at a temperature between 2 °C and 25 °C in a sterile, airtight container. If more than the upper one-third of the medium has acquired a pink colour, the medium may be restored once by heating the containers in a water-bath or in free-flowing steam until the pink colour disappears and cooling quickly, taking care to prevent the introduction of non-sterile air into the container. Do not use the medium for a longer storage period than has been validated.

Fluid thioglycollate medium is to be incubated at 30-35 °C.

For products containing a mercurial preservative that cannot be tested by the membrane-filtration method, fluid thioglycollate medium incubated at 20-25 °C may be used instead of soya-bean casein digest medium provided that it has been validated as described in growth promotion test.

Where prescribed or justified and authorised, the following alternative thioglycollate medium may be used. Prepare a mixture having the same composition as that of the fluid thioglycollate medium, but omitting the agar and the resazurin sodium solution, sterilise as directed above. The pH after sterilisation is 7.1 ± 0.2. Heat in a water-bath prior to use and incubate at 30-35 °C under anaerobic conditions.

Soya-bean casein digest medium

Pancreatic digest of casein	17.0 g
Papaic digest of soya-bean meal	3.0 g
Sodium chloride	5.0 g
Dipotassium hydrogen phosphate	2.5 g
Glucose monohydrate/anhydrous	2.5 g/2.3 g
Water R	1000 mL

pH after sterilisation 7.3 ± 0.2

Dissolve the solids in *water R*, warming slightly to effect solution. Cool the solution to room temperature. Add *1 M sodium hydroxide*, if necessary, so that after sterilisation the solution will have a pH of 7.3 ± 0.2. Filter, if necessary, to clarify, distribute into suitable vessels and sterilise using a validated process. Store at a temperature between 2 °C and 25 °C in a sterile well-closed container, unless it is intended for immediate use. Do not use the medium for a longer storage period than has been validated.

Soya-bean casein digest medium is to be incubated at 20-25 °C.

The media used comply with the following tests, carried out before or in parallel with the test on the product to be examined.

Sterility. Incubate portions of the media for 14 days. No growth of micro-organisms occurs.

Growth promotion test of aerobes, anaerobes and fungi. Test each batch of ready-prepared medium and each batch of medium prepared either from dehydrated medium or from ingredients. Suitable strains of micro-organisms are indicated in Table 2.6.1.-1.

Inoculate portions of fluid thioglycollate medium with a small number (not more than 100 CFU) of the following micro-organisms, using a separate portion of medium for each of the following species of micro-organism: *Clostridium sporogenes*, *Pseudomonas aeruginosa*, *Staphylococcus aureus*. Inoculate portions of soya-bean casein digest medium with a small number (not more than 100 CFU) of the following micro-organisms, using a separate portion of medium for each of the following species of micro-organism: *Aspergillus brasiliensis*, *Bacillus subtilis*, *Candida albicans*. Incubate for not more than 3 days in the case of bacteria and not more than 5 days in the case of fungi.

Seed lot culture maintenance techniques (seed-lot systems) are used so that the viable micro-organisms used for inoculation are not more than 5 passages removed from the original master seed-lot.

The media are suitable if a clearly visible growth of the micro-organisms occurs.

(1) This chapter has undergone pharmacopoeial harmonisation. See chapter *5.8. Pharmacopoeial harmonisation*.

Table 2.6.1.-1. – *Strains of the test micro-organisms suitable for use in the growth promotion test and the method suitability test*

Aerobic bacteria	
Staphylococcus aureus	ATCC 6538, CIP 4.83, NCTC 10788, NCIMB 9518, NBRC 13276
Bacillus subtilis	ATCC 6633, CIP 52.62, NCIMB 8054, NBRC 3134
Pseudomonas aeruginosa	ATCC 9027, NCIMB 8626, CIP 82.118, NBRC 13275
Anaerobic bacterium	
Clostridium sporogenes	ATCC 19404, CIP 79.3, NCTC 532, ATCC 11437, NBRC 14293
Fungi	
Candida albicans	ATCC 10231, IP 48.72, NCPF 3179, NBRC 1594
Aspergillus brasiliensis	ATCC 16404, IP 1431.83, IMI 149007, NBRC 9455

METHOD SUITABILITY TEST

Carry out a test as described below under Test for sterility of the product to be examined using exactly the same methods except for the following modifications.

Membrane filtration. After transferring the contents of the container or containers to be tested to the membrane add an inoculum of a small number of viable micro-organisms (not more than 100 CFU) to the final portion of sterile diluent used to rinse the filter.

Direct inoculation. After transferring the content of the container or containers to be tested (for catgut and other surgical sutures for veterinary use: strands) to the culture medium add an inoculum of a small number of viable micro-organisms (not more than 100 CFU) to the medium.

In both cases use the same micro-organisms as those described above under Growth promotion test of aerobes, anaerobes and fungi. Perform a growth promotion test as a positive control. Incubate all the containers containing medium for not more than 5 days.

If clearly visible growth of micro-organisms is obtained after the incubation, visually comparable to that in the control vessel without product, either the product possesses no antimicrobial activity under the conditions of the test or such activity has been satisfactorily eliminated. The test for sterility may then be carried out without further modification.

If clearly visible growth is not obtained in the presence of the product to be tested, visually comparable to that in the control vessels without product, the product possesses antimicrobial activity that has not been satisfactorily eliminated under the conditions of the test. Modify the conditions in order to eliminate the antimicrobial activity and repeat the method suitability test.

This method suitability test is performed:

a) when the test for sterility has to be carried out on a new product;

b) whenever there is a change in the experimental conditions of the test.

The method suitability test may be performed simultaneously with the test for sterility of the product to be examined.

TEST FOR STERILITY OF THE PRODUCT TO BE EXAMINED

The test may be carried out using the technique of membrane filtration or by direct inoculation of the culture media with the product to be examined. Appropriate negative controls are included. The technique of membrane filtration is used whenever the nature of the product permits, that is, for filterable aqueous preparations, for alcoholic or oily preparations and for preparations miscible with or soluble in aqueous or oily solvents provided these solvents do not have an antimicrobial effect in the conditions of the test.

Membrane filtration. Use membrane filters having a nominal pore size not greater than 0.45 µm whose effectiveness to retain micro-organisms has been established. Cellulose nitrate filters, for example, are used for aqueous, oily and weakly alcoholic solutions and cellulose acetate filters, for example, for strongly alcoholic solutions. Specially adapted filters may be needed for certain products, e.g. for antibiotics.

The technique described below assumes that membranes about 50 mm in diameter will be used. If filters of a different diameter are used the volumes of the dilutions and the washings should be adjusted accordingly. The filtration apparatus and membrane are sterilised by appropriate means. The apparatus is designed so that the solution to be examined can be introduced and filtered under aseptic conditions; it permits the aseptic removal of the membrane for transfer to the medium or it is suitable for carrying out the incubation after adding the medium to the apparatus itself.

Aqueous solutions. If appropriate, transfer a small quantity of a suitable, sterile diluent such as a 1 g/L neutral solution of meat or casein peptone pH 7.1 ± 0.2 onto the membrane in the apparatus and filter. The diluent may contain suitable neutralising substances and/or appropriate inactivating substances for example in the case of antibiotics.

Transfer the contents of the container or containers to be tested to the membrane or membranes, if necessary after diluting to the volume used in the method suitability test with the chosen sterile diluent but in any case using not less than the quantities of the product to be examined prescribed in Table 2.6.1.-2. Filter immediately. If the product has antimicrobial properties, wash the membrane not less than 3 times by filtering through it each time the volume of the chosen sterile diluent used in the method suitability test. Do not exceed a washing cycle of 5 times 100 mL per filter, even if during the method suitability test it has been demonstrated that such a cycle does not fully eliminate the antimicrobial activity. Transfer the whole membrane to the culture medium or cut it aseptically into 2 equal parts and transfer one half to each of 2 suitable media. Use the same volume of each medium as in the method suitability test. Alternatively, transfer the medium onto the membrane in the apparatus. Incubate the media for not less than 14 days.

Soluble solids. Use for each medium not less than the quantity prescribed in Table 2.6.1.-2 of the product dissolved in a suitable solvent such as the solvent provided with the preparation, water for injections, saline or a 1 g/L neutral solution of meat or casein peptone and proceed with the test as described above for aqueous solutions using a membrane appropriate to the chosen solvent.

Oils and oily solutions. Use for each medium not less than the quantity of the product prescribed in Table 2.6.1.-2. Oils and oily solutions of sufficiently low viscosity may be filtered without dilution through a dry membrane. Viscous oils may be diluted as necessary with a suitable sterile diluent such as isopropyl myristate shown not to have antimicrobial activity in the conditions of the test. Allow the oil to penetrate the membrane by its own weight then filter, applying the pressure or suction gradually. Wash the membrane at least 3 times by filtering through it each time about 100 mL of a suitable sterile solution such as 1 g/L neutral meat or casein peptone containing a suitable emulsifying agent at a concentration

Table 2.6.1.-2. – *Minimum quantity to be used for each medium*

Quantity per container	Minimum quantity to be used for each medium unless otherwise justified and authorised
Liquids	
– less than 1 mL	The whole contents of each container
– 1-40 mL	Half the contents of each container but not less than 1 mL
– greater than 40 mL and not greater than 100 mL	20 mL
– greater than 100 mL	10 per cent of the contents of the container but not less than 20 mL
Antibiotic liquids	1 mL
Insoluble preparations, creams and ointments to be suspended or emulsified	Use the contents of each container to provide not less than 200 mg
Solids	
– less than 50 mg	The whole contents of each container
– 50 mg or more but less than 300 mg	Half the contents of each container but not less than 50 mg
– 300 mg to 5 g	150 mg
– greater than 5 g	500 mg
Catgut and other surgical sutures for veterinary use	3 sections of a strand (each 30 cm long)

shown to be appropriate in the method suitability test, for example polysorbate 80 at a concentration of 10 g/L. Transfer the membrane or membranes to the culture medium or media or vice versa as described above for aqueous solutions, and incubate at the same temperatures and for the same times.

Ointments and creams. Use for each medium not less than the quantities of the product prescribed in Table 2.6.1.-2. Ointments in a fatty base and emulsions of the water-in-oil type may be diluted to 1 per cent in isopropyl myristate as described above, by heating, if necessary, to not more than 40 °C. In exceptional cases it may be necessary to heat to not more than 44 °C. Filter as rapidly as possible and proceed as described above for oils and oily solutions.

Direct inoculation of the culture medium. Transfer the quantity of the preparation to be examined prescribed in Table 2.6.1.-2 directly into the culture medium so that the volume of the product is not more than 10 per cent of the volume of the medium, unless otherwise prescribed.

If the product to be examined has antimicrobial activity, carry out the test after neutralising this with a suitable neutralising substance or by dilution in a sufficient quantity of culture medium. When it is necessary to use a large volume of the product it may be preferable to use a concentrated culture medium prepared in such a way that it takes account of the subsequent dilution. Where appropriate, the concentrated medium may be added directly to the product in its container.

Oily liquids. Use media to which have been added a suitable emulsifying agent at a concentration shown to be appropriate in the method suitability test, for example polysorbate 80 at a concentration of 10 g/L.

Ointments and creams. Prepare by diluting to about 1 in 10 by emulsifying with the chosen emulsifying agent in a suitable sterile diluent such as a 1 g/L neutral solution of meat or casein peptone. Transfer the diluted product to a medium not containing an emulsifying agent.

Incubate the inoculated media for not less than 14 days. Observe the cultures several times during the incubation period. Shake cultures containing oily products gently each day. However when fluid thioglycollate medium is used for the detection of anaerobic micro-organisms keep shaking or mixing to a minimum in order to maintain anaerobic conditions.

Catgut and other surgical sutures for veterinary use. Use for each medium not less than the quantities of the product prescribed in Table 2.6.1.-2. Open the sealed package using aseptic precautions and remove 3 sections of the strand for each culture medium. Carry out the test on 3 sections, each 30 cm long, cut off from the beginning, the centre and the end of the strand. Use whole strands from freshly opened cassette packs. Transfer each section of the strand to the selected medium. Use sufficient medium to cover adequately the material to be tested (20 mL to 150 mL).

OBSERVATION AND INTERPRETATION OF RESULTS

At intervals during the incubation period and at its conclusion, examine the media for macroscopic evidence of microbial growth. If the material being tested renders the medium turbid so that the presence or absence of microbial growth cannot be readily determined by visual examination, 14 days after the beginning of incubation transfer portions (each not less than 1 mL) of the medium to fresh vessels of the same medium and then incubate the original and transfer vessels for not less than 4 days.

If no evidence of microbial growth is found, the product to be examined complies with the test for sterility. If evidence of microbial growth is found the product to be examined does not comply with the test for sterility, unless it can be clearly demonstrated that the test was invalid for causes unrelated to the product to be examined. The test may be considered invalid only if one or more of the following conditions are fulfilled:

a) the data of the microbiological monitoring of the sterility testing facility show a fault;

b) a review of the testing procedure used during the test in question reveals a fault;

c) microbial growth is found in the negative controls;

d) after determination of the identity of the micro-organisms isolated from the test, the growth of this species or these species may be ascribed unequivocally to faults with respect to the material and/or the technique used in conducting the sterility test procedure.

If the test is declared to be invalid it is repeated with the same number of units as in the original test.

If no evidence of microbial growth is found in the repeat test the product examined complies with the test for sterility. If microbial growth is found in the repeat test the product examined does not comply with the test for sterility.

Table 2.6.1.-3. – *Minimum number of items to be tested*

Number of items in the batch*	Minimum number of items to be tested for each medium, unless otherwise justified and authorised**
Parenteral preparations	
– Not more than 100 containers	10 per cent or 4 containers, whichever is the greater
– More than 100 but not more than 500 containers	10 containers
– More than 500 containers	2 per cent or 20 containers (10 containers for large-volume parenterals) whichever is less
Ophthalmic and other non-injectable preparations	
– Not more than 200 containers	5 per cent or 2 containers, whichever is the greater
– More than 200 containers	10 containers
– If the product is presented in the form of single-dose containers, apply the scheme shown above for preparations for parenteral administration	
Catgut and other surgical sutures for veterinary use	2 per cent or 5 packages whichever is the greater, up to a maximum total of 20 packages
Bulk solid products	
– Up to 4 containers	Each container
– More than 4 containers but not more than 50 containers	20 per cent or 4 containers, whichever is the greater
– More than 50 containers	2 per cent or 10 containers, whichever is the greater

* If the batch size is not known, use the maximum number of items prescribed.
**If the contents of one container are enough to inoculate the 2 media, this column gives the number of containers needed for both the media together.

APPLICATION OF THE TEST TO PARENTERAL PREPARATIONS, OPHTHALMIC AND OTHER NON-INJECTABLE PREPARATIONS REQUIRED TO COMPLY WITH THE TEST FOR STERILITY

When using the technique of membrane filtration, use, whenever possible, the whole contents of the container, but not less than the quantities indicated in Table 2.6.1.-2, diluting where necessary to about 100 mL with a suitable sterile solution, such as 1 g/L neutral meat or casein peptone.

When using the technique of direct inoculation of media, use the quantities shown in Table 2.6.1.-2, unless otherwise justified and authorised. The tests for bacterial and fungal sterility are carried out on the same sample of the product to be examined. When the volume or the quantity in a single container is insufficient to carry out the tests, the contents of 2 or more containers are used to inoculate the different media.

MINIMUM NUMBER OF ITEMS TO BE TESTED

The minimum number of items to be tested in relation to the size of the batch is given in Table 2.6.1.-3.

Guidelines on the test for sterility are given in general chapter 5.1.9.

01/2008:20602

2.6.2. MYCOBACTERIA

If the sample to be examined may be contaminated by micro-organisms other than mycobacteria, treat it with a suitable decontamination solution, such as acetylcysteine-sodium hydroxide solution or sodium laurilsulfate solution.

Inoculate 0.2 mL of the sample in triplicate onto each of 2 suitable solid media (Löwenstein-Jensen medium and Middlebrook 7H10 medium are considered suitable). Inoculate 0.5 mL in triplicate into a suitable liquid medium. Incubate all media at 37 °C for 56 days.

Establish the fertility of the media in the presence of the preparation to be examined by inoculation of a suitable strain of a *Mycobacterium* sp. such as BCG and if necessary use a suitable neutralising substance.

If contaminating micro-organisms develop during the first 8 days of incubation, repeat the test and carry out at the same time a bacteriological sterility test.

If at the end of the incubation time no growth of mycobacteria occurs in any of the test media, the preparation complies with the test.

01/2008:20607
corrected 6.1

2.6.7. MYCOPLASMAS

Where the test for mycoplasmas is prescribed for a master cell bank, for a working cell bank, for a virus seed lot or for control cells, both the culture method and the indicator cell culture method are used. Where the test for mycoplasmas is prescribed for a virus harvest, for a bulk vaccine or for the final lot (batch), the culture method is used. The indicator cell culture method may also be used, where necessary, for screening of media.

Nucleic acid amplification techniques (NAT) may be used as an alternative to one or both of the other methods after suitable validation.

CULTURE METHOD

CHOICE OF CULTURE MEDIA

The test is carried out using a sufficient number of both solid and liquid media to ensure growth in the chosen incubation conditions of small numbers of mycoplasmas that may be present in the product to be examined. Liquid media must contain phenol red. The range of media chosen is shown to have satisfactory nutritive properties for at least the micro-organisms shown below. The nutritive properties of each new batch of medium are verified for the appropriate micro-organisms in the list. When testing for mycoplasmas in the product to be examined, at least 1 of the following species will be included as a positive control:

- *Acholeplasma laidlawii* (vaccines for human and veterinary use where an antibiotic has been used during production);
- *Mycoplasma gallisepticum* (where avian material has been used during production or where the vaccine is intended for use in poultry);
- *Mycoplasma hyorhinis* (non-avian veterinary vaccines);
- *Mycoplasma orale* (vaccines for human and veterinary use);

- *Mycoplasma pneumoniae* (vaccines for human use) or other suitable species of D-glucose fermenter such as *Mycoplasma fermentans*;
- *Mycoplasma synoviae* (where avian material has been used during production or where the vaccine is intended for use in poultry).

The test strains are field isolates having undergone a limited number of subcultures (not more than 15), and are stored frozen or freeze-dried. After cloning, the strains are identified as being of the required species by comparison with type cultures, for example:

A. laidlawii	NCTC 10116	CIP 75.27	ATCC 23206
M. gallisepticum	NCTC 10115	CIP 104967	ATCC 19610
M. fermentans	NCTC 10117	CIP 105680	ATCC 19989
M. hyorhinis	NCTC 10130	CIP 104968	ATCC 17981
M. orale	NCTC 10112	CIP 104969	ATCC 23714
M. pneumoniae	NCTC 10119	CIP 103766	ATCC 15531
M. synoviae	NCTC 10124	CIP 104970	ATCC 25204

Acholeplasma laidlawii BRP, *Mycoplasma fermentans BRP*, *Mycoplasma hyorhinis BRP*, *Mycoplasma orale BRP* and *Mycoplasma synoviae BRP* are suitable for use as low-passage reference strains.

INCUBATION CONDITIONS

Incubate liquid media in tightly stoppered containers at 35-38 °C. Incubate solid media in microaerophilic conditions (nitrogen containing 5-10 per cent of carbon dioxide and sufficient humidity to prevent desiccation of the agar surface) at 35-38 °C.

NUTRITIVE PROPERTIES

Carry out the test for nutritive properties for each new batch of medium. Inoculate the chosen media with the appropriate test micro-organisms; use not more than 100 CFU (colony-forming units) per 60 mm diameter plate containing 9 mL of solid medium and per 100 mL container of liquid medium; use a separate plate and container for each species of micro-organism. Incubate the media and make subcultures from 0.2 mL of liquid medium to solid medium at the specified intervals (see below under Test for mycoplasmas in the product to be examined). The solid medium complies with the test if adequate growth is found for each test micro-organism (growth obtained does not differ by a factor greater than 5 from the value calculated with respect to the inoculum). The liquid medium complies with the test if growth on agar plates subcultured from the broth is found for at least 1 subculture for each test micro-organism.

INHIBITORY SUBSTANCES

The test for inhibitory substances is carried out once for a given product and is repeated whenever there is a change in production method that may affect the detection of mycoplasmas.

To demonstrate absence of inhibitory substances, carry out the test for nutritive properties in the presence and absence of the product to be examined. If growth of a test micro-organism occurs more than 1 subculture sooner in the absence of the product to be examined than in its presence, or if plates directly inoculated with the product to be examined have fewer than 1/5 of the number of colonies of those inoculated without the product to be examined, inhibitory substances are present and they must be neutralised or their effect otherwise countered, for example by passage in substrates not containing inhibitors or dilution in a larger volume of medium before the test. If dilution is used, larger medium volumes may be used or the inoculum volume may be divided among several 100 mL flasks. The effectiveness of the neutralisation or other process is checked by repeating the test for inhibitory substances after neutralisation.

TEST FOR MYCOPLASMAS IN THE PRODUCT TO BE EXAMINED

Inoculate 10 mL of the product to be examined per 100 mL of each liquid medium. If it has been found that a significant pH change occurs upon the addition of the product to be examined, the liquid medium is restored to its original pH value by the addition of a solution of either sodium hydroxide or hydrochloric acid. Inoculate 0.2 mL of the product to be examined on each plate of each solid medium. Incubate liquid media for 20-21 days. Incubate solid media for not less than 14 days, except those corresponding to the 20-21 day subculture, which are incubated for 7 days. At the same time incubate an uninoculated 100 mL portion of each liquid medium and agar plates, as a negative control. On days 2-4 after inoculation, subculture each liquid medium by inoculating 0.2 mL on at least 1 plate of each solid medium. Repeat the procedure between the 6th and 8th days, again between the 13th and 15th days and again between the 19th and 21st days of the test. Observe the liquid media every 2 or 3 days and if a colour change occurs, subculture. If a liquid medium shows bacterial or fungal contamination, the test is invalid. The test is valid if at least 1 plate per medium and per inoculation day can be read. Include in the test positive controls prepared by inoculation of not more than 100 CFU of at least 1 test micro-organism on agar medium or into broth medium. Where the test for mycoplasmas is carried out regularly and where possible, it is recommended to use the test micro-organisms in regular rotation. The test micro-organisms used are those listed under Choice of culture media.

INTERPRETATION OF RESULTS

At the end of the prescribed incubation period, examine all inoculated solid media microscopically for the presence of mycoplasma colonies. The product complies with the test if growth of typical mycoplasma colonies has not occurred. The product does not comply with the test if growth of typical mycoplasma colonies has occurred on any of the solid media. The test is invalid if 1 or more of the positive controls do not show growth of mycoplasmas on at least 1 subculture plate. The test is invalid if 1 or more of the negative controls show growth of mycoplasmas. If suspect colonies are observed, a suitable validated method may be used to determine whether they are due to mycoplasmas.

The following section is published for information.

RECOMMENDED MEDIA FOR THE CULTURE METHOD

The following media are recommended. Other media may be used, provided that their ability to sustain the growth of mycoplasmas has been demonstrated on each batch in the presence and absence of the product to be examined.

HAYFLICK MEDIA (RECOMMENDED FOR THE GENERAL DETECTION OF MYCOPLASMAS)

Liquid medium

Beef heart infusion broth (1)	90.0 mL
Horse serum (unheated)	20.0 mL
Yeast extract (250 g/L)	10.0 mL
Phenol red (0.6 g/L solution)	5.0 mL
Penicillin (20 000 IU/mL)	0.25 mL
Deoxyribonucleic acid (2 g/L solution)	1.2 mL

Adjust to pH 7.8.

Solid medium

Prepare as described above replacing beef heart infusion broth by beef heart infusion agar containing 15 g/L of agar.

FREY MEDIA (RECOMMENDED FOR THE DETECTION OF M. SYNOVIAE)

Liquid medium

Beef heart infusion broth (1)	90.0 mL
Essential vitamins (2)	0.025 mL
Glucose monohydrate (500 g/L solution)	2.0 mL
Swine serum (inactivated at 56 °C for 30 min)	12.0 mL
β-Nicotinamide adenine dinucleotide (10 g/L solution)	1.0 mL
Cysteine hydrochloride (10 g/L solution)	1.0 mL
Phenol red (0.6 g/L solution)	5.0 mL
Penicillin (20 000 IU/mL)	0.25 mL

Mix the solutions of β-nicotinamide adenine dinucleotide and cysteine hydrochloride and after 10 min add to the other ingredients. Adjust to pH 7.8.

Solid medium

Beef heart infusion broth (1)	90.0 mL
Agar, purified (3)	1.4 g

Adjust to pH 7.8, sterilise by autoclaving then add:

Essential vitamins (2)	0.025 mL
Glucose monohydrate (500 g/L solution)	2.0 mL
Swine serum (unheated)	12.0 mL
β-Nicotinamide adenine dinucleotide (10 g/L solution)	1.0 mL
Cysteine hydrochloride (10 g/L solution)	1.0 mL
Phenol red (0.6 g/L solution)	5.0 mL
Penicillin (20 000 IU/mL)	0.25 mL

FRIIS MEDIA (RECOMMENDED FOR THE DETECTION OF NON-AVIAN MYCOPLASMAS)

Liquid medium

Hanks' balanced salt solution (modified) (4)	800 mL
Distilled water	67 mL
Brain heart infusion (5)	135 mL
PPLO Broth (6)	248 mL
Yeast extract (170 g/L)	60 mL
Bacitracin	250 mg
Meticillin	250 mg
Phenol red (5 g/L)	4.5 mL
Horse serum	165 mL
Swine serum	165 mL

Adjust to pH 7.40-7.45.

Solid medium

Hanks' balanced salt solution (modified) (4)	200 mL
DEAE-dextran	200 mg
Agar, purified (3)	15.65 g

Mix well and sterilise by autoclaving. Cool to 100 °C. Add to 1740 mL of liquid medium as described above.

(1) *Beef heart infusion broth*

Beef heart (for preparation of the infusion)	500 g
Peptone	10 g
Sodium chloride	5 g
Distilled water	to 1000 mL

Sterilise by autoclaving.

(2) *Essential vitamins*

Biotin	100 mg
Calcium pantothenate	100 mg
Choline chloride	100 mg
Folic acid	100 mg
i-Inositol	200 mg
Nicotinamide	100 mg
Pyridoxal hydrochloride	100 mg
Riboflavine	10 mg
Thiamine hydrochloride	100 mg
Distilled water	to 1000 mL

(3) *Agar, purified*

A highly refined agar for use in microbiology and immunology, prepared by an ion-exchange procedure that results in a product having superior purity, clarity and gel strength. It contains about:

Water	12.2 per cent
Ash	1.5 per cent
Acid-insoluble ash	0.2 per cent
Chlorine	0
Phosphate (calculated as P_2O_5)	0.3 per cent
Total nitrogen	0.3 per cent
Copper	8 ppm
Iron	170 ppm
Calcium	0.28 per cent
Magnesium	0.32 per cent

(4) *Hanks' balanced salt solution (modified)*

Sodium chloride	6.4 g
Potassium chloride	0.32 g
Magnesium sulfate heptahydrate	0.08 g
Magnesium chloride hexahydrate	0.08 g
Calcium chloride, anhydrous	0.112 g
Disodium hydrogen phosphate dihydrate	0.0596 g
Potassium dihydrogen phosphate, anhydrous	0.048 g
Distilled water	to 800 mL

(5) *Brain heart infusion*

Calf-brain infusion	200 g
Beef-heart infusion	250 g
Proteose peptone	10 g
Glucose monohydrate	2 g
Sodium chloride	5 g
Disodium hydrogen phosphate, anhydrous	2.5 g
Distilled water	to 1000 mL

(6) *PPLO broth*

Beef-heart infusion	50 g
Peptone	10 g
Sodium chloride	5 g
Distilled water	to 1000 mL

INDICATOR CELL CULTURE METHOD

Cell cultures are stained with a fluorescent dye that binds to DNA. Mycoplasmas are detected by their characteristic particulate or filamentous pattern of fluorescence on the cell surface and, if contamination is heavy, in surrounding areas. Mitochondria in the cytoplasm may be stained but are readily distinguished from mycoplasmas.

If for viral suspensions the interpretation of results is affected by marked cytopathic effects, the virus may be neutralised using a specific antiserum that has no inhibitory effects on mycoplasmas or a cell culture substrate that does not allow growth of the virus may be used. To demonstrate the absence of inhibitory effects of serum, carry out the positive control tests in the presence and absence of the antiserum.

VERIFICATION OF THE SUBSTRATE

Use Vero cells or another cell culture (for example, the production cell line) that is equivalent in effectiveness for detecting mycoplasmas. Test the effectiveness of the cells to be used by applying the procedure shown below and inoculating not more than 100 CFU or CFU-like micro-organisms of suitable reference strains of *M. hyorhinis* and *M. orale*. The following strains have been found to be suitable:

M. hyorhinis			ATCC 29052
M. orale	NCTC 10112	CIP 104969	ATCC 23714

The cells are suitable if both reference strains are detected.

The indicator cells must be subcultured without an antibiotic before use in the test.

TEST METHOD

1. Seed the indicator cell culture at a suitable density (for example, 2×10^4 to 2×10^5 cells/mL, 4×10^3 to 2.5×10^4 cells/cm^2) that will yield confluence after 3 days of growth. Inoculate 1 mL of the product to be examined into the cell culture vessel and incubate at 35-38 °C.

2. After at least 3 days of incubation, when the cells have grown to confluence, make a subculture on cover slips in suitable containers or on some other surface (for example, chambered slides) suitable for the test procedure. Seed the cells at low density so that they reach 50 per cent confluence after 3-5 days of incubation. Complete confluence impairs visualisation of mycoplasmas after staining and must be avoided.

3. Remove the medium and rinse the indicator cells with *phosphate buffered saline pH 7.4 R*, then add a suitable fixing solution (a freshly prepared mixture of 1 volume of *glacial acetic acid R* and 3 volumes of *methanol R* is suitable when *bisbenzimide R* is used for staining).

4. Remove the fixing solution and wash the cells with sterile *water R*. Dry the slides completely if they are to be stained more than 1 h later (particular care is needed for staining of slides after drying owing to artefacts that may be produced).

5. Add a suitable DNA stain and allow to stand for a suitable time (*bisbenzimide working solution R* and a standing time of 10 min are suitable).

6. Remove the stain and rinse the monolayer with *water R*.

7. Mount each coverslip, where applicable (a mixture of equal volumes of *glycerol R* and *phosphate-citrate buffer solution pH 5.5 R* is suitable for mounting). Examine by fluorescence (for bisbenzimide stain a 330 nm/380 nm excitation filter and an LP 440 nm barrier filter are suitable) at 400 × magnification or greater.

8. Compare the microscopic appearance of the test cultures with that of the negative and positive controls, examining for extranuclear fluorescence. Mycoplasmas produce pinpoints or filaments over the indicator cell cytoplasm. They may also produce pinpoints and filaments in the intercellular spaces. Multiple microscopic fields are examined according to the protocol established during validation.

INTERPRETATION OF RESULTS

The product to be examined complies with the test if fluorescence typical of mycoplasmas is not present. The test is invalid if the positive controls do not show fluorescence typical of mycoplasmas. The test is invalid if the negative controls show fluorescence typical of mycoplasmas.

NUCLEIC ACID AMPLIFICATION TECHNIQUES (NAT)

NAT (*2.6.21*) may be used for detection of mycoplasmas by amplification of nucleic acids extracted from a test sample with specific primers that reveal the presence of the target nucleic acid. NAT indicate the presence of a particular nucleic acid sequence and not necessarily the presence of viable mycoplasmas. A number of different techniques are available. This general chapter does not prescribe a particular method for the test. The procedure applied must be validated as described, taking account of the guidelines presented at the end of this section. Where a commercial kit is used, certain elements of the validation may be carried out by the manufacturer and information provided to the user but it must be remembered that full information on the primers may not be available and that production of the kit may be modified or discontinued.

NAT are applied where prescribed in a monograph. They may also be used instead of the culture method and the indicator cell culture method after suitable validation.

Direct NAT can be applied in the presence of cytotoxic material and where a rapid method is needed.

Cell-culture enrichment followed by NAT: the test sample and a suitable cell substrate (as described under the indicator cell-culture method) are cultured together for a suitable period; the nucleic acids are then extracted from cells and supernatant and used for detection by NAT.

VALIDATION

Reference standards are required at various stages during validation and for use as controls during routine application of the test. The reference standards may be mycoplasmas or nucleic acids.

For validation of the limit of detection, the following species represent an optimal selection in terms of the frequency of occurrence as contaminants and phylogenetic relationships:

- *A. laidlawii*;
- *M. fermentans*;
- *M. hyorhinis* (where cell-culture enrichment is used, a fastidious strain such as ATCC 29052 is included);
- *M. orale*;
- *M. pneumoniae* or *M. gallisepticum*;
- *M. synoviae* (where there is use of or exposure to avian material during production);
- *Mycoplasma arginini;*
- *Spiroplasma citri* (where there is use of or exposure to insect or plant material during production).

Demonstration of specificity requires the use of a suitable range of bacterial species other than mycoplasmas. Bacterial genera with close phylogenetic relation to mycoplasmas are most appropriate for this validation; these include *Clostridium, Lactobacillus* and *Streptococcus*.

Comparability studies for use of NAT as an alternative method. For each mycoplasma test species:

- as an alternative to the culture method: the NAT test system must be shown to detect 10 CFU/mL;
- as an alternative to the indicator cell culture method: the NAT test system must be shown to detect 100 CFU/mL;

or an equivalent limit of detection in terms of the number of copies of mycoplasma nucleic acid in the test sample (using suitable reference standards of mycoplasma nucleic acid).

CONTROLS

Internal controls. Internal controls are necessary for routine verification of absence of inhibition. The internal control may contain the primer binding-site, or some other suitable sequence may be used. It is preferably added to the test material before isolating the nucleic acid and therefore acts as an overall control (extraction, reverse transcription, amplification, detection).

External controls. The external positive control contains a defined number of target-sequence copies or CFUs from 1 or more suitable species of mycoplasma chosen from those used during validation of the test conditions. 1 of the positive controls is set close to the positive cut-off point to demonstrate that the expected sensitivity is achieved. The external negative control contains no target sequence but does not necessarily represent the same matrix as the test article.

INTERPRETATION OF RESULTS

The primers used may also amplify non-mycoplasmal bacterial nucleic acid, leading to false positive results. Procedures are established at the time of validation for dealing with confirmation of positive results, where necessary.

The following section is published for information.

Validation of nucleic acid amplification techniques (NAT) for the detection of mycoplasmas: guidelines

1. *SCOPE*

Nucleic acid amplification techniques (NAT) are either qualitative or quantitative tests for the presence of nucleic acid. For the detection of mycoplasma contamination of various samples such as vaccines and cell substrates, qualitative tests are adequate and may be considered to be limit tests. These guidelines describe methods to validate qualitative nucleic acid amplification analytical procedures for assessing mycoplasma contamination. They may also be applicable for real-time NAT used as limit tests for the control of contaminants.

The 2 characteristics regarded as the most important for validation of the analytical procedure are the specificity and the detection limit. In addition, the robustness of the analytical procedure should be evaluated.

For the purpose of this document, an analytical procedure is defined as the complete procedure from extraction of nucleic acid to detection of the amplified products.

Where commercial kits are used for part or all of the analytical procedure, documented validation points already covered by the kit manufacturer can replace validation by the user. Nevertheless, the performance of the kit with respect to its intended use has to be demonstrated by the user (e.g. detection limit, robustness, cross-detection of other classes of bacteria).

NAT may be used as:

- a complementary test (for example, for cytotoxic viral suspensions) or for in-process control purposes;
- an alternative method to replace an official method (indicator cell culture method or culture method).

These guidelines will thus separate these 2 objectives by presenting first a guideline for the validation of the NAT themselves, and second, a guideline for a comparability study between NAT and official methods.

2. *GUIDELINE FOR MYCOPLASMA NAT VALIDATION*

3 parameters should be evaluated: specificity, detection limit and robustness.

2-1. **Specificity**. Specificity is the ability to unequivocally assess target nucleic acid in the presence of components that may be expected to be present.

The specificity of NAT is dependent on the choice of primers, the choice of probe (for analysis of the final product) and the stringency of the test conditions (for both the amplification and detection steps).

The ability of the NAT to detect a large panel of mycoplasma species will depend on the choice of primers, probes and method parameters. This ability should be demonstrated using characterised reference panels (e.g. reference strains provided by the EDQM). Since NAT systems are usually based on a mix of primers, the theoretical analysis of primers and probes by comparison with databases is not recommended, because interpretation of the results may be quite complex and may not reflect the experimental results.

Moreover, as it is likely that the primers will detect other bacterial species, the potential cross-detection should be documented in the validation study. Bacterial genera such as gram-positive bacteria with close phylogenetic relation to mycoplasmas are most appropriate for this validation; these include *Clostridium*, *Lactobacillus* and *Streptococcus*. However, this is not an exhaustive list and species to be tested will depend on the theoretical ability (based on primers/probes sequences) of the NAT system to detect such other species.

Based on the results from this validation of the specificity, if a gap in the specificity of the method is identified (such as detection of non-mycoplasmal bacterial nucleic acid), an appropriate strategy must be proposed in the validation study to allow interpretation of positive results on a routine basis. For example, a second test may be performed using an alternative method without this specificity gap or using an official method.

2-2. **Detection limit**. The detection limit of an individual analytical procedure is the lowest amount of target nucleic acid in a sample that can be detected but not necessarily quantitated as an exact value.

For establishment of the detection limit, a positive cut-off point should be determined for the nucleic acid amplification analytical procedure. The positive cut-off point (as defined in general chapter *2.6.21*) is the minimum number of target sequence copies per volume of sample that can be detected in 95 per cent of test runs. This positive cut-off point is influenced by the distribution of mycoplasmal genomes in the individual samples being tested and by factors such as enzyme efficiency, and can result in different 95 per cent cut-off values for individual analytical test runs.

To determine the positive cut-off point, a dilution series of characterised and calibrated (either in CFUs or nucleic acid copies) in-house working strains or EDQM standards should be tested on different days to examine variation between test runs.

For validation of the limit of detection, the following species represent an optimal selection in terms of the frequency of occurrence as contaminants and phylogenetic relationships:

- *A. laidlawii*;
- *M. fermentans*;
- *M. hyorhinis*;
- *M. orale*;
- *M. pneumoniae* or *M. gallisepticum*;
- *M. synoviae* (where there is use of or exposure to avian material during production);
- *M. arginini*;
- *S. citri* (where there is use of or exposure to insect or plant material during production).

For each strain, at least 3 independent 10-fold dilution series should be tested, with a sufficient number of replicates at each dilution to give a total number of 24 test results for each dilution, to enable a statistical analysis of the results.

For example, a laboratory may test 3 dilution series on different days with 8 replicates for each dilution, 4 dilution series on different days with 6 replicates for each dilution, or 6 dilution series on different days with 4 replicates for each dilution. In order to keep the number of dilutions at a

manageable level, a preliminary test should be performed to obtain a preliminary value for the positive cut-off point (i.e. the highest dilution giving a positive signal). The range of dilutions can then be chosen around the predetermined preliminary cut-off point. The concentration of mycoplasmas (CFUs or copies) that can be detected in 95 per cent of test runs can then be calculated using an appropriate statistical evaluation.

These results may also serve to evaluate the variability of the analytical procedure.

2-3. **Robustness**. The robustness of an analytical procedure is a measure of its capacity to remain unaffected by small but deliberate variations in method parameters, and provides an indication of its reliability during normal usage.

The evaluation of robustness should be considered during the development phase. It should show the reliability of the analytical procedure with respect to deliberate variations in method parameters. For NAT, small variations in the method parameters can be crucial. However, the robustness of the method can be demonstrated during its development when small variations in the concentrations of reagents (e.g. $MgCl_2$, primers or deoxyribonucleotides) are tested. Modifications of extraction kits or extraction procedures as well as different thermal cycler types may also be evaluated.

Finally, robustness of the method can be evaluated through collaborative studies.

3. *GUIDELINE FOR COMPARABILITY STUDY*

NAT may be used instead of official methods (indicator cell culture method and/or culture method). In this case a comparability study should be carried out. This comparability study should include mainly a comparison of the respective detection limits of the alternative method and official methods. However, specificity (mycoplasma panel detected, putative false positive results) should also be considered.

For the detection limit, acceptability criteria are defined as follows:

- if the alternative method is proposed to replace the culture method, the NAT system must be shown to detect 10 CFU/mL for each mycoplasma test species described in paragraph 2-2;
- if the alternative method is proposed to replace the indicator cell culture method, the NAT system must be shown to detect 100 CFU/mL for each mycoplasma test species described in paragraph 2-2.

For both cases, suitable standards calibrated for the number of nucleic acid copies and the number of CFUs may be used for establishing that these acceptability criteria are reached. The relation between CFUs and nucleic acid copies for the reference preparations should be previously established to compare the performance of the alternative NAT method with the performance of the official methods.

1 of the following 2 strategies can be used to perform this comparability study:

- perform the NAT alternative method in parallel with the official method(s) to evaluate simultaneously the detection limit of both methods using the same samples of calibrated strains;
- compare the performance of the NAT alternative method using previously obtained data from official method validation. In this case, calibration of standards used for both validations as well as their stabilities should be documented carefully.

Comparability study reports should describe all the validation elements described in section 2 (specificity, limit of detection and variability, as well as robustness) in order to assess all the advantages and/or disadvantages of the alternative NAT method compared to official methods.

01/2008:20608

2.6.8. PYROGENS

The test consists of measuring the rise in body temperature evoked in rabbits by the intravenous injection of a sterile solution of the substance to be examined.

Selection of animals. Use healthy, adult rabbits of either sex weighing not less than 1.5 kg, fed a complete and balanced diet not containing antibiotics, and not showing loss of body mass during the week preceding the test. A rabbit is not be used in a pyrogen test:

a) if it has been used in a negative pyrogen test in the preceding 3 days, or

b) if it has been used in the preceding 3 weeks in a pyrogen test in which the substance under examination failed to pass the test.

Animals' quarters. Keep the rabbits individually in a quiet area with a uniform appropriate temperature. Withhold food from the rabbits overnight and until the test is completed; withhold water during the test. Carry out the test in a quiet room where there is no risk of disturbance exciting the animals and in which the room temperature is within 3 °C of that of the rabbits' living quarters, or in which the rabbits have been kept for at least 18 h before the test.

Materials. Glassware, syringes and needles. Thoroughly wash all glassware, syringes and needles with water for injections and heat in a hot-air oven at 250 °C for 30 min or at 200 °C for 1 h.

Retaining boxes. The retaining boxes for rabbits whose temperature is being measured by an electrical device are made in such a way that the animals are retained only by loosely fitting neck-stocks; the rest of the body remains relatively free so that the rabbits may sit in a normal position. They are not restrained by straps or other similar methods which may harm the animal. The animals are put into the boxes not less than 1 h before the first record of the temperature and remain in them throughout the test.

Thermometers. Use a thermometer or electrical device which indicates the temperature with a precision of 0.1 °C and insert into the rectum of the rabbit to a depth of about 5 cm. The depth of insertion is constant for any one rabbit in any one test. When an electrical device is used it may be left in position throughout the test.

Preliminary test. After selection of the animals, one to three days before testing the product to be examined, treat those animals that have not been used during the previous 2 weeks by intravenous injection of 10 mL per kilogram of body mass of a pyrogen-free 9 g/L solution of *sodium chloride R* warmed to about 38.5 °C. Record the temperatures of the animals, beginning at least 90 min before injection and continuing for 3 h after the injection of the solution. Any animal showing a temperature variation greater than 0.6 °C is not used in the main test.

Main test. Carry out the test using a group of three rabbits.

Preparation and injection of the product. Warm the liquid to be examined to approximately 38.5 °C before the injection. The product to be examined may be dissolved in, or diluted with, a pyrogen-free 9 g/L solution of *sodium chloride R* or another prescribed liquid. Inject the solution slowly into the marginal vein of the ear of each rabbit over a period not exceeding 4 min, unless otherwise prescribed in the monograph. The amount of the product to be injected varies according to the product to be examined and is prescribed in the monograph. The volume injected is not less than 0.5 mL per kilogram and not more than 10 mL per kilogram of body mass.

Determination of the initial and maximum temperatures. The "initial temperature" of each rabbit is the mean of two temperature readings recorded for that rabbit at an interval of 30 min in the 40 min immediately preceding the injection of

the product to be examined. The "maximum temperature" of each rabbit is the highest temperature recorded for that rabbit in the 3 h after the injection. Record the temperature of each rabbit at intervals of not more than 30 min, beginning at least 90 min before the injection of the product to be examined and continuing 3 h after the injection. The difference between the maximum temperature and the initial temperature of each rabbit is taken to be its response. When this difference is negative, the result is counted as a zero response.

Rabbits showing a temperature variation greater than 0.2 °C between two successive readings in the determination of the initial temperature are withdrawn from the test. In any one test, only rabbits having initial temperatures which do not differ from one another by more than 1 °C are used. All rabbits having an initial temperature higher than 39.8 °C or less than 38.0 °C are withdrawn from the test.

Interpretation of results. Having carried out the test first on a group of three rabbits, repeat if necessary on further groups of three rabbits to a total of four groups, depending on the results obtained. If the summed response of the first group does not exceed the figure given in the second column of the Table 2.6.8.-1, the substance passes the test. If the summed response exceeds the figure given in the second column of the table but does not exceed the figure given in the third column of the table, repeat the test as indicated above. If the summed response exceeds the figure given in the third column of the table, the product fails the test.

Table 2.6.8.-1

Number of rabbits	Product passes if summed response does not exceed	Product fails if summed response exceeds
3	1.15 °C	2.65 °C
6	2.80 °C	4.30 °C
9	4.45 °C	5.95 °C
12	6.60 °C	6.60 °C

Rabbits used in a test for pyrogens where the mean rise in the rabbits' temperature has exceeded 1.2 °C are permanently excluded.

01/2008:20609

2.6.9. ABNORMAL TOXICITY

GENERAL TEST

Inject intravenously into each of 5 healthy mice, weighing 17 g to 24 g, the quantity of the substance to be examined prescribed in the monograph, dissolved in 0.5 mL of *water for injections R* or of a 9 g/L sterile solution of *sodium chloride R*. Inject the solution over a period of 15 s to 30 s, unless otherwise prescribed.

The substance passes the test if none of the mice die within 24 h or within such time as is specified in the individual monograph. If more than one animal dies the preparation fails the test. If one of the animals dies, repeat the test. The substance passes the test if none of the animals in the 2nd group die within the time interval specified.

IMMUNOSERA AND VACCINES FOR HUMAN USE

Unless otherwise prescribed, inject intraperitoneally 1 human dose but not more than 1.0 mL into each of 5 healthy mice, weighing 17 g to 24 g. The human dose is that stated on the label of the preparation to be examined or on the accompanying leaflet. Observe the animals for 7 days.

The preparation passes the test if none of the animals shows signs of ill health. If more than one animal dies, the preparation fails the test. If one of the animals dies or shows signs of ill health, repeat the test. The preparation passes the test if none of the animals in the 2nd group die or shows signs of ill health in the time interval specified.

The test must also be carried out on 2 healthy guinea-pigs weighing 250 g to 400 g. Inject intraperitoneally into each animal 1 human dose but not more than 5.0 mL. The human dose is that stated on the label of the preparation to be examined or on the accompanying leaflet. Observe the animals for 7 days.

The preparation passes the test if none of the animals shows signs of ill health. If more than one animal dies the preparation fails the test. If one of the animals dies or shows signs of ill health, repeat the test. The preparation passes the test if none of the animals in the 2nd group die or shows signs of ill health in the time interval specified.

01/2008:20610

2.6.10. HISTAMINE

Euthanise a guinea-pig weighing 250 g to 350 g that has been deprived of food for the preceding 24 h. Remove a portion of the distal small intestine 2 cm in length and empty the isolated part by rinsing carefully with solution B described below using a syringe. Attach a fine thread to each end and make a small transverse incision in the middle of the piece of intestine. Place it in an organ bath with a capacity of 10 mL to 20 mL, containing solution B maintained at a constant temperature (34 °C to 36 °C) and pass through the solution a current of a mixture of 95 parts of oxygen and 5 parts of carbon dioxide. Attach one of the threads near to the bottom of the organ bath. Attach the other thread to an isotonic myograph and record the contractions of the organ on a kymograph or other suitable means of giving a permanent record. If a lever is used, its length is such that the movements of the organ are amplified about 20 times. The tension on the intestine should be about 9.8 mN (1 g) and it should be adjusted to the sensitivity of the organ. Flush out the organ bath with solution B. Allow it to stand for 10 min. Flush 2 or 3 times more with solution B. Stimulate a series of contractions by the addition of measured volumes between 0.2 mL and 0.5 mL of a solution of *histamine dihydrochloride R* having a strength which produces reproducible submaximal responses. This dose is termed the "high dose". Flush the organ bath (preferably by overflow without emptying the bath) 3 times with solution B before each addition of histamine. The successive additions should be made at regular intervals allowing a complete relaxation between additions (about 2 min). Add equal volumes of a weaker dilution of *histamine dihydrochloride R* which produces reproducible responses approximately half as great as the "high dose". This dose is termed the "low dose". Continue the regular additions of "high" and "low" doses of histamine solution as indicated above, and alternate each addition with an equal volume of a dilution of the solution to be examined, adjusting the dilution so that the contraction of the intestine, if any, is smaller than that due to the "high dose" of histamine. Determine whether the contraction, if any, is reproducible and that the responses to the "high" and "low" doses of histamine are unchanged. Calculate the activity of the substance to be examined in terms of its equivalent in micrograms of histamine base from the dilution determined as above.

The quantity so determined does not exceed the quantity prescribed in the monograph.

If the solution to be examined does not produce a contraction, prepare a fresh solution adding a quantity of histamine corresponding to the maximum tolerated in the monograph and note whether the contractions produced by the preparation with the added histamine correspond to the amount of histamine added. If this is not the case, or if the contractions caused by the substance to be examined are not reproducible or if subsequent responses to "high" and "low" doses of histamine are diminished, the results of the tests are invalid and the test for depressor substances (*2.6.11*) must be carried out.

Solution A

Sodium chloride	160.0 g
Potassium chloride	4.0 g
Calcium chloride, anhydrous	2.0 g
Magnesium chloride, anhydrous	1.0 g
Disodium hydrogen phosphate dodecahydrate	0.10 g
Water for injections R	to 1000 mL

Solution B

Solution A	50.0 mL
Atropine sulfate	0.5 mg
Sodium hydrogen carbonate	1.0 g
Glucose monohydrate	0.5 g
Water for injections R	to 1000 mL

Solution B should be freshly prepared and used within 24 h.

01/2008:20611

2.6.11. DEPRESSOR SUBSTANCES

Carry out the test on a cat weighing not less than 2 kg and anaesthetised with chloralose or with a barbiturate that allows the maintenance of uniform blood pressure. Protect the animal from loss of body heat and maintain it so that the rectal temperature remains within physiological limits. Introduce a cannula into the trachea. Insert a cannula filled with a heparinised 9 g/L solution of sodium chloride into the common carotid artery and connect it to a device capable of giving a continuous record of the blood pressure. Insert into the femoral vein another cannula, filled with a heparinised 9 g/L solution of sodium chloride, through which can be injected the solutions of histamine and of the substance to be examined. Determine the sensitivity of the animal to histamine by injecting intravenously at regular intervals, doses of *histamine solution R* corresponding to 0.1 µg and 0.15 µg of histamine base per kilogram of body mass. Repeat the lower dose at least 3 times. Administer the second and subsequent injections not less than 1 min after the blood pressure has returned to the level it was at immediately before the previous injection. The animal is used for the test only if a readily discernible decrease in blood pressure that is constant for the lower dose is obtained and if the higher dose causes greater responses. Dissolve the substance to be examined in sufficient of a 9 g/L solution of sodium chloride or other prescribed solvent, to give the prescribed concentration. Inject intravenously per kilogram of body mass 1.0 mL of *histamine solution R*, followed by 2 successive injections of the prescribed amount of the solution to be examined and, finally, 1.0 mL of *histamine solution R*. The second, third and fourth injections are given not less than 1 min after the blood pressure has returned to the level it was at immediately before the preceding injection. Repeat this series of injections twice and conclude the test by giving 1.5 mL of *histamine solution R* per kilogram of body mass.

If the response to 1.5 mL of *histamine solution R* per kilogram of body mass is not greater than that to 1.0 mL the test is invalid. The substance to be examined fails the test if the mean of the series of responses to the substance is greater than the mean of the responses to 1.0 mL of *histamine solution R* per kilogram of body mass or if any one dose of the substance causes a greater depressor response than the concluding dose of the histamine solution. The test animal must not be used in another test for depressor substances if the second criterion applies or if the response to the high dose of histamine given after the administration of the substance to be examined is less than the mean response to the low doses of histamine previously injected.

07/2010:20612

2.6.12. MICROBIOLOGICAL EXAMINATION OF NON-STERILE PRODUCTS: MICROBIAL ENUMERATION TESTS[(2)]

1. INTRODUCTION

The tests described hereafter will allow quantitative enumeration of mesophilic bacteria and fungi that may grow under aerobic conditions.

The tests are designed primarily to determine whether a substance or preparation complies with an established specification for microbiological quality. When used for such purposes follow the instructions given below, including the number of samples to be taken, and interpret the results as stated below.

The methods are not applicable to products containing viable micro-organisms as active ingredients.

Alternative microbiological procedures, including automated methods, may be used, provided that their equivalence to the Pharmacopoeia method has been demonstrated.

2. GENERAL PROCEDURES

Carry out the determination under conditions designed to avoid extrinsic microbial contamination of the product to be examined. The precautions taken to avoid contamination must be such that they do not affect any micro-organisms that are to be revealed in the test.

If the product to be examined has antimicrobial activity, this is insofar as possible removed or neutralised. If inactivators are used for this purpose, their efficacy and their absence of toxicity for micro-organisms must be demonstrated.

If surface-active substances are used for sample preparation, their absence of toxicity for micro-organisms and their compatibility with inactivators used must be demonstrated.

3. ENUMERATION METHODS

Use the membrane filtration method or the plate-count methods, as prescribed. The most-probable-number (MPN) method is generally the least accurate method for microbial counts, however, for certain product groups with a very low bioburden, it may be the most appropriate method.

The choice of method is based on factors such as the nature of the product and the required limit of micro-organisms. The chosen method must allow testing of a sufficient sample size to judge compliance with the specification. The suitability of the method chosen must be established.

4. GROWTH PROMOTION TEST, SUITABILITY OF THE COUNTING METHOD AND NEGATIVE CONTROLS

4-1. *GENERAL CONSIDERATIONS*

The ability of the test to detect micro-organisms in the presence of product to be tested must be established.

Suitability must be confirmed if a change in testing performance, or the product, which may affect the outcome of the test is introduced.

4-2. *PREPARATION OF TEST STRAINS*

Use standardised stable suspensions of test strains or prepare them as stated below. Seed lot culture maintenance techniques (seed-lot systems) are used so that the viable micro-organisms used for inoculation are not more than

(2) This chapter has undergone pharmacopoeial harmonisation. See chapter *5.8. Pharmacopoeial harmonisation*.

5 passages removed from the original master seed-lot. Grow each of the bacterial and fungal test strains separately as described in Table 2.6.12.-1.

Use buffered sodium chloride-peptone solution pH 7.0 or phosphate buffer solution pH 7.2 to make test suspensions; to suspend *A. brasiliensis* spores, 0.05 per cent of polysorbate 80 may be added to the buffer. Use the suspensions within 2 h or within 24 h if stored at 2-8 °C. As an alternative to preparing and then diluting a fresh suspension of vegetative cells of *A. brasiliensis* or *B. subtilis*, a stable spore suspension is prepared and then an appropriate volume of the spore suspension is used for test inoculation. The stable spore suspension may be maintained at 2-8 °C for a validated period of time.

4-3. *NEGATIVE CONTROL*

To verify testing conditions, a negative control is performed using the chosen diluent in place of the test preparation. There must be no growth of micro-organisms. A negative control is also performed when testing the products as described in section 5. A failed negative control requires an investigation.

4-4. *GROWTH PROMOTION OF THE MEDIA*

Test each batch of ready-prepared medium and each batch of medium, prepared either from dehydrated medium or from the ingredients described.

Inoculate portions/plates of casein soya bean digest broth and casein soya bean digest agar with a small number (not more than 100 CFU) of the micro-organisms indicated in Table 2.6.12.-1, using a separate portion/plate of medium for each. Inoculate plates of Sabouraud-dextrose agar with a small number (not more than 100 CFU) of the micro-organisms indicated in Table 2.6.12.-1, using a separate plate of medium for each. Incubate in the conditions described in Table 2.6.12.-1.

For solid media, growth obtained must not differ by a factor greater than 2 from the calculated value for a standardised inoculum. For a freshly prepared inoculum, growth of the micro-organisms comparable to that previously obtained with a previously tested and approved batch of medium occurs. Liquid media are suitable if clearly visible growth of the micro-organisms comparable to that previously obtained with a previously tested and approved batch of medium occurs.

4-5. *SUITABILITY OF THE COUNTING METHOD IN THE PRESENCE OF PRODUCT*

4-5-1. **Preparation of the sample**. The method for sample preparation depends upon the physical characteristics of the product to be tested. If none of the procedures described below can be demonstrated to be satisfactory, an alternative procedure must be developed.

Water-soluble products. Dissolve or dilute (usually a 1 in 10 dilution is prepared) the product to be examined in buffered sodium chloride-peptone solution pH 7.0, phosphate buffer solution pH 7.2 or casein soya bean digest broth. If necessary, adjust to pH 6-8. Further dilutions, where necessary, are prepared with the same diluent.

Non-fatty products insoluble in water. Suspend the product to be examined (usually a 1 in 10 dilution is prepared) in buffered sodium chloride-peptone solution pH 7.0, phosphate buffer solution pH 7.2 or casein soya bean digest broth. A surface-active agent such as 1 g/L of polysorbate 80 may be added to assist the suspension of poorly wettable substances. If necessary, adjust to pH 6-8. Further dilutions, where necessary, are prepared with the same diluent.

Fatty products. Dissolve in isopropyl myristate, sterilised by filtration or mix the product to be examined with the minimum necessary quantity of sterile polysorbate 80 or another non-inhibitory sterile surface-active agent, heated if necessary to not more than 40 °C, or in exceptional cases to not more than 45 °C. Mix carefully and if necessary maintain the

Table 2.6.12.-1. – *Preparation and use of test micro-organisms*

Micro-organism	Preparation of test strain	Growth promotion		Suitability of counting method in the presence of the product	
		Total aerobic microbial count	Total yeasts and moulds count	Total aerobic microbial count	Total yeasts and moulds count
Staphylococcus aureus such as: ATCC 6538 NCIMB 9518 CIP 4.83 NBRC 13276	Casein soya bean digest agar or casein soya bean digest broth 30-35 °C 18-24 h	Casein soya bean digest agar and casein soya bean digest broth ≤ 100 CFU 30-35 °C ≤ 3 days	-	Casein soya bean digest agar/MPN casein soya bean digest broth ≤ 100 CFU 30-35 °C ≤ 3 days	-
Pseudomonas aeruginosa such as: ATCC 9027 NCIMB 8626 CIP 82.118 NBRC 13275	Casein soya bean digest agar or casein soya bean digest broth 30-35 °C 18-24 h	Casein soya bean digest agar and casein soya bean digest broth ≤ 100 CFU 30-35 °C ≤ 3 days	-	Casein soya bean digest agar/MPN casein soya bean digest broth ≤ 100 CFU 30-35 °C ≤ 3 days	-
Bacillus subtilis such as: ATCC 6633 NCIMB 8054 CIP 52.62 NBRC 3134	Casein soya bean digest agar or casein soya bean digest broth 30-35 °C 18-24 h	Casein soya bean digest agar and casein soya bean digest broth ≤ 100 CFU 30-35 °C ≤ 3 days	-	Casein soya bean digest agar/MPN casein soya bean digest broth ≤ 100 CFU 30-35 °C ≤ 3 days	-
Candida albicans such as: ATCC 10231 NCPF 3179 IP 48.72 NBRC 1594	Sabouraud-dextrose agar or Sabouraud-dextrose broth 20-25 °C 2-3 days	Casein soya bean digest agar ≤ 100 CFU 30-35 °C ≤ 5 days	Sabouraud-dextrose agar ≤ 100 CFU 20-25 °C ≤ 5 days	Casein soya bean digest agar ≤ 100 CFU 30-35 °C ≤ 5 days MPN: not applicable	Sabouraud-dextrose agar ≤ 100 CFU 20-25 °C ≤ 5 days
Aspergillus brasiliensis such as: ATCC 16404 IMI 149007 IP 1431.83 NBRC 9455	Sabouraud-dextrose agar or potato-dextrose agar 20-25 °C 5-7 days, or until good sporulation is achieved	Casein soya bean digest agar ≤ 100 CFU 30-35 °C ≤ 5 days	Sabouraud-dextrose agar ≤ 100 CFU 20-25 °C ≤ 5 days	Casein soya bean digest agar ≤ 100 CFU 30-35 °C ≤ 5 days MPN: not applicable	Sabouraud-dextrose agar ≤ 100 CFU 20-25 °C ≤ 5 days

temperature in a water-bath. Add sufficient of the pre-warmed chosen diluent to make a 1 in 10 dilution of the original product. Mix carefully whilst maintaining the temperature for the shortest time necessary for the formation of an emulsion. Further serial tenfold dilutions may be prepared using the chosen diluent containing a suitable concentration of sterile polysorbate 80 or another non-inhibitory sterile surface-active agent.

Fluids or solids in aerosol form. Aseptically transfer the product into a membrane filter apparatus or a sterile container for further sampling. Use either the total contents or a defined number of metered doses from each of the containers tested.

Transdermal patches. Remove the protective cover sheets ('release liners') of the transdermal patches and place them, adhesive side upwards, on sterile glass or plastic trays. Cover the adhesive surface with a sterile porous material, for example sterile gauze, to prevent the patches from sticking together, and transfer the patches to a suitable volume of the chosen diluent containing inactivators such as polysorbate 80 and/or lecithin. Shake the preparation vigorously for at least 30 min.

4-5-2. **Inoculation and dilution**. Add to the sample prepared as described above (4-5-1) and to a control (with no test material included) a sufficient volume of the microbial suspension to obtain an inoculum of not more than 100 CFU. The volume of the suspension of the inoculum should not exceed 1 per cent of the volume of diluted product.

To demonstrate acceptable microbial recovery from the product, the lowest possible dilution factor of the prepared sample must be used for the test. Where this is not possible due to antimicrobial activity or poor solubility, further appropriate protocols must be developed. If inhibition of growth by the sample cannot otherwise be avoided, the aliquot of the microbial suspension may be added after neutralisation, dilution or filtration.

4-5-3. **Neutralisation/removal of antimicrobial activity**. The number of micro-organisms recovered from the prepared sample diluted as described in 4-5-2 and incubated following the procedure described in 4-5-4, is compared to the number of micro-organisms recovered from the control preparation.

If growth is inhibited (reduction by a factor greater than 2), then modify the procedure for the particular enumeration test to ensure the validity of the results. Modification of the procedure may include, for example, (1) an increase in the volume of the diluent or culture medium, (2) incorporation of specific or general neutralising agents into the diluent, (3) membrane filtration, or (4) a combination of the above measures.

Neutralising agents. Neutralising agents may be used to neutralise the activity of antimicrobial agents (Table 2.6.12.-2). They may be added to the chosen diluent or the medium preferably before sterilisation. If used, their efficacy and their absence of toxicity for micro-organisms must be demonstrated by carrying out a blank with neutraliser and without product.

If no suitable neutralising method can be found, it can be assumed that the failure to isolate the inoculated organism is attributable to the microbicidal activity of the product. This information serves to indicate that the product is not likely to be contaminated with the given species of the micro-organism. However, it is possible that the product only inhibits some of the micro-organisms specified herein, but does not inhibit others not included amongst the test strains or for which the latter are not representative. Then, perform the test with the highest dilution factor compatible with microbial growth and the specific acceptance criterion.

Table 2.6.12.-2. – *Common neutralising agents for interfering substances*

Interfering substance	Potential neutralising method
Glutaraldehyde, mercurials	Sodium hydrogensulfite (sodium bisulfite)
Phenolics, alcohol, aldehydes, sorbate	Dilution
Aldehydes	Glycine
Quaternary Ammonium Compounds (QACs), parahydroxybenzoates (parabens), bis-biguanides	Lecithin
QACs, iodine, parabens	Polysorbate
Mercurials	Thioglycollate
Mercurials, halogens, aldehydes	Thiosulfate
EDTA (edetate)	Mg^{2+} or Ca^{2+} ions

4-5-4. **Recovery of micro-organism in the presence of product**. For each of the micro-organisms listed, separate tests are performed. Only micro-organisms of the added test strain are counted.

4-5-4-1. *Membrane filtration*. Use membrane filters having a nominal pore size not greater than 0.45 µm. The type of filter material is chosen such that the bacteria-retaining efficiency is not affected by the components of the sample to be investigated. For each of the micro-organisms listed, one membrane filter is used.

Transfer a suitable amount of the sample prepared as described under 4-5-1 to 4-5-3 (preferably representing 1 g of the product, or less if large numbers of CFU are expected) to the membrane filter, filter immediately and rinse the membrane filter with an appropriate volume of diluent.

For the determination of total aerobic microbial count (TAMC), transfer the membrane filter to the surface of casein soya bean digest agar. For the determination of total combined yeasts/moulds count (TYMC), transfer the membrane to the surface of Sabouraud-dextrose agar. Incubate the plates as indicated in Table 2.6.12.-1. Perform the counting.

4-5-4-2. *Plate-count methods*. Perform plate-count methods at least in duplicate for each medium and use the mean count of the result.

4-5-4-2-1. Pour-plate method

For Petri dishes 9 cm in diameter, add to the dish 1 mL of the sample prepared as described under 4-5-1 to 4-5-3 and 15-20 mL of casein soya bean digest agar or Sabouraud-dextrose agar, both media being at not more than 45 °C. If larger Petri dishes are used, the amount of agar medium is increased accordingly. For each of the micro-organisms listed in Table 2.6.12.-1, at least 2 Petri dishes are used. Incubate the plates as indicated in Table 2.6.12.-1. Take the arithmetic mean of the counts per medium and calculate the number of CFU in the original inoculum.

4-5-4-2-2. Surface-spread method

For Petri dishes 9 cm in diameter, add 15-20 mL of casein soya bean digest agar or Sabouraud-dextrose agar at about 45 °C to each Petri dish and allow to solidify. If larger Petri dishes are used, the volume of the agar is increased accordingly. Dry the plates, for example in a laminar-air-flow cabinet or an incubator. For each of the micro-organisms listed in Table 2.6.12.-1, at least 2 Petri dishes are used. Spread a measured volume of not less than 0.1 mL of the sample prepared as described under 4-5-1 to 4-5-3 over the surface of the medium. Incubate and count as prescribed under 4-5-4-2-1.

4-5-4-3. *Most-probable-number (MPN) method.* The precision and accuracy of the MPN method is less than that of the membrane filtration method or the plate-count method. Unreliable results are obtained particularly for the enumeration of moulds. For these reasons the MPN method is reserved for the enumeration of TAMC in situations where no other method is available. If the use of the method is justified, proceed as follows.

Prepare a series of at least 3 serial tenfold dilutions of the product as described under 4-5-1 to 4-5-3. From each level of dilution, 3 aliquots of 1 g or 1 mL are used to inoculate 3 tubes with 9-10 mL of casein soya bean digest broth. If necessary, a surface-active agent such as polysorbate 80 or an inactivator of antimicrobial agents may be added to the medium. Thus, if 3 levels of dilution are prepared, 9 tubes are inoculated.

Incubate all tubes at 30-35 °C for not more than 3 days. If reading of the results is difficult or uncertain owing to the nature of the product to be examined, subculture in the same broth, or in casein soya bean digest agar, for 1-2 days at the same temperature and use these results. Determine the most probable number of micro-organisms per gram or millilitre of the product to be examined from Table 2.6.12.-3.

4-6. *RESULTS AND INTERPRETATION*

When verifying the suitability of the membrane filtration method or the plate-count method, a mean count of any of the test organisms not differing by a factor greater than 2 from the value of the control defined in 4-5-2 in the absence of the product must be obtained. When verifying the suitability of the MPN method the calculated value from the inoculum must be within 95 per cent confidence limits of the results obtained with the control.

If the above criteria cannot be met for one or more of the organisms tested with any of the described methods, the method and test conditions that come closest to the criteria are used to test the product.

5. TESTING OF PRODUCTS

5-1. *AMOUNT USED FOR THE TEST*

Unless otherwise prescribed, use 10 g or 10 mL of the product to be examined taken with the precautions referred to above. For fluids or solids in aerosol form, sample 10 containers. For transdermal patches, sample 10 patches.

The amount to be tested may be reduced for active substances that will be formulated in the following conditions: the amount per dosage unit (e.g. tablet, capsule, injection) is less than or equal to 1 mg or the amount per gram or millilitre (for preparations not presented in dose units) is less than 1 mg. In these cases, the amount to be tested is not less than the amount present in 10 dosage units or 10 g or 10 mL of the product.

For materials used as active substances where sample quantity is limited or batch size is extremely small (i.e. less than 1000 mL or 1000 g), the amount tested shall be 1 per cent of the batch unless a lesser amount is prescribed or justified and authorised.

For products where the total number of entities in a batch is less than 200 (e.g. samples used in clinical trials), the sample size may be reduced to 2 units, or 1 unit if the size is less than 100.

Select the sample(s) at random from the bulk material or from the available containers of the preparation. To obtain the required quantity, mix the contents of a sufficient number of containers to provide the sample.

Table 2.6.12.-3. – *Most-probable-number values of micro-organisms*

Observed combinations of numbers of tubes showing growth in each set			MPN per gram or per millilitre of product	95 per cent confidence limits
Number of grams or millilitres of product per tube				
0.1	0.01	0.001		
0	0	0	< 3	0-9.4
0	0	1	3	0.1-9.5
0	1	0	3	0.1-10
0	1	1	6.1	1.2-17
0	2	0	6.2	1.2-17
0	3	0	9.4	3.5-35
1	0	0	3.6	0.2-17
1	0	1	7.2	1.2-17
1	0	2	11	4-35
1	1	0	7.4	1.3-20
1	1	1	11	4-35
1	2	0	11	4-35
1	2	1	15	5-38
1	3	0	16	5-38
2	0	0	9.2	1.5-35
2	0	1	14	4-35
2	0	2	20	5-38
2	1	0	15	4-38
2	1	1	20	5-38
2	1	2	27	9-94
2	2	0	21	5-40
2	2	1	28	9-94
2	2	2	35	9-94
2	3	0	29	9-94
2	3	1	36	9-94
3	0	0	23	5-94
3	0	1	38	9-104
3	0	2	64	16-181
3	1	0	43	9-181
3	1	1	75	17-199
3	1	2	120	30-360
3	1	3	160	30-380
3	2	0	93	18-360
3	2	1	150	30-380
3	2	2	210	30-400
3	2	3	290	90-990
3	3	0	240	40-990
3	3	1	460	90-1980
3	3	2	1100	200-4000
3	3	3	> 1100	

5-2. *EXAMINATION OF THE PRODUCT*

5-2-1. **Membrane filtration**

Use a filtration apparatus designed to allow the transfer of the filter to the medium. Prepare the sample using a method that

has been shown suitable as described in section 4 and transfer the appropriate amount to each of 2 membrane filters and filter immediately. Wash each filter following the procedure shown to be suitable.

For the determination of TAMC, transfer one of the membrane filters to the surface of casein soya bean digest agar. For the determination of TYMC, transfer the other membrane to the surface of Sabouraud-dextrose agar. Incubate the plate of casein soya bean digest agar at 30-35 °C for 3-5 days and the plate of Sabouraud-dextrose agar at 20-25 °C for 5-7 days. Calculate the number of CFU per gram or per millilitre of product.

When examining transdermal patches, filter 10 per cent of the volume of the preparation described under 4-5-1 separately through each of 2 sterile filter membranes. Transfer one membrane to casein soya bean digest agar for TAMC and the other membrane to Sabouraud-dextrose agar for TYMC.

5-2-2. **Plate-count methods**

5-2-2-1. Pour-plate method

Prepare the sample using a method that has been shown to be suitable as described in section 4. Prepare for each medium at least 2 Petri dishes for each level of dilution. Incubate the plates of casein soya bean digest agar at 30-35 °C for 3-5 days and the plates of Sabouraud-dextrose agar at 20-25 °C for 5-7 days. Select the plates corresponding to a given dilution and showing the highest number of colonies less than 250 for TAMC and 50 for TYMC. Take the arithmetic mean per culture medium of the counts and calculate the number of CFU per gram or per millilitre of product.

5-2-2-2. Surface-spread method

Prepare the sample using a method that has been shown to be suitable as described in section 4. Prepare at least 2 Petri dishes for each medium and each level of dilution. For incubation and calculation of the number of CFU proceed as described for the pour-plate method.

5-2-3. **Most-probable-number method**

Prepare and dilute the sample using a method that has been shown to be suitable as described in section 4. Incubate all tubes at 30-35 °C for 3-5 days. Subculture if necessary, using the procedure shown to be suitable. Record for each level of dilution the number of tubes showing microbial growth. Determine the most probable number of micro-organisms per gram or millilitre of the product to be examined from Table 2.6.12.-3.

5-3. *INTERPRETATION OF THE RESULTS*

The total aerobic microbial count (TAMC) is considered to be equal to the number of CFU found using casein soya bean digest agar; if colonies of fungi are detected on this medium, they are counted as part of the TAMC. The total combined yeasts/mould count (TYMC) is considered to be equal to the number of CFU found using Sabouraud-dextrose agar; if colonies of bacteria are detected on this medium, they are counted as part of the TYMC. When the TYMC is expected to exceed the acceptance criterion due to the bacterial growth, Sabouraud-dextrose agar containing antibiotics may be used. If the count is carried out by the MPN method the calculated value is the TAMC.

When an acceptance criterion for microbiological quality is prescribed it is interpreted as follows:

- 10^1 CFU: maximum acceptable count = 20;
- 10^2 CFU: maximum acceptable count = 200;
- 10^3 CFU: maximum acceptable count = 2000, and so forth.

The recommended solutions and media are described in general chapter *2.6.13*.

04/2010:20613

2.6.13. MICROBIOLOGICAL EXAMINATION OF NON-STERILE PRODUCTS: TEST FOR SPECIFIED MICRO-ORGANISMS (3)

1. INTRODUCTION

The tests described hereafter will allow determination of the absence or limited occurrence of specified micro-organisms that may be detected under the conditions described.

The tests are designed primarily to determine whether a substance or preparation complies with an established specification for microbiological quality. When used for such purposes, follow the instructions given below, including the number of samples to be taken, and interpret the results as stated below.

Alternative microbiological procedures, including automated methods, may be used, provided that their equivalence to the Pharmacopoeia method has been demonstrated.

2. GENERAL PROCEDURES

The preparation of samples is carried out as described in general chapter *2.6.12*.

If the product to be examined has antimicrobial activity, this is insofar as possible removed or neutralised as described in general chapter *2.6.12*.

If surface-active substances are used for sample preparation, their absence of toxicity for micro-organisms and their compatibility with inactivators used must be demonstrated as described in general chapter *2.6.12*.

3. GROWTH-PROMOTING AND INHIBITORY PROPERTIES OF THE MEDIA, SUITABILITY OF THE TEST AND NEGATIVE CONTROLS

The ability of the test to detect micro-organisms in the presence of the product to be tested must be established. Suitability must be confirmed if a change in testing performance, or the product, which may affect the outcome of the test is introduced.

3-1. *PREPARATION OF TEST STRAINS*

Use standardised stable suspensions of test strains or prepare them as stated below. Seed lot culture maintenance techniques (seed-lot systems) are used so that the viable micro-organisms used for inoculation are not more than 5 passages removed from the original master seed-lot.

3-1-1. **Aerobic micro-organisms**. Grow each of the bacterial test strains separately in casein soya bean digest broth or on casein soya bean digest agar at 30-35 °C for 18-24 h. Grow the test strain for *Candida albicans* separately on Sabouraud-dextrose agar or in Sabouraud-dextrose broth at 20-25 °C for 2-3 days.

- *Staphylococcus aureus* such as ATCC 6538, NCIMB 9518, CIP 4.83 or NBRC 13276;
- *Pseudomonas aeruginosa* such as ATCC 9027, NCIMB 8626, CIP 82.118 or NBRC 13275;
- *Escherichia coli* such as ATCC 8739, NCIMB 8545, CIP 53.126 or NBRC 3972;
- *Salmonella enterica* subsp. *enterica* serovar Typhimurium, such as ATCC 14028 or, as an alternative, *Salmonella enterica* subsp. *enterica* serovar Abony such as NBRC 100797, NCTC 6017 or CIP 80.39;
- *Candida albicans* such as ATCC 10231, NCPF 3179, IP 48.72 or NBRC 1594.

Use buffered sodium chloride-peptone solution pH 7.0 or phosphate buffer solution pH 7.2 to make test suspensions.

(3) This chapter has undergone pharmacopoeial harmonisation. See chapter *5.8. Pharmacopoeial harmonisation*.

Use the suspensions within 2 h or within 24 h if stored at 2-8 °C.

3-1-2. **Clostridia**. Use *Clostridium sporogenes* such as ATCC 11437 (NBRC 14293, NCIMB 12343, CIP 100651) or ATCC 19404 (NCTC 532 or CIP 79.03) or NBRC 14293. Grow the clostridial test strain under anaerobic conditions in reinforced medium for clostridia at 30-35 °C for 24-48 h. As an alternative to preparing and then diluting down a fresh suspension of vegetative cells of *Cl. sporogenes*, a stable spore suspension is used for test inoculation. The stable spore suspension may be maintained at 2-8 °C for a validated period.

3-2. *NEGATIVE CONTROL*

To verify testing conditions, a negative control is performed using the chosen diluent in place of the test preparation. There must be no growth of micro-organisms. A negative control is also performed when testing the products as described in section 4. A failed negative control requires an investigation.

3-3. *GROWTH PROMOTION AND INHIBITORY PROPERTIES OF THE MEDIA*

Test each batch of ready-prepared medium and each batch of medium prepared either from dehydrated medium or from ingredients.

Verify suitable properties of relevant media as described in Table 2.6.13.-1.

Test for growth promoting properties, liquid media: inoculate a portion of the appropriate medium with a small number (not more than 100 CFU) of the appropriate micro-organism. Incubate at the specified temperature for not more than the shortest period of time specified in the test. Clearly visible growth of the micro-organism comparable to that previously obtained with a previously tested and approved batch of medium occurs.

Test for growth promoting properties, solid media: perform the surface-spread method, inoculating each plate with a small number (not more than 100 CFU) of the appropriate micro-organism. Incubate at the specified temperature for not more than the shortest period of time specified in the test. Growth of the micro-organism comparable to that previously obtained with a previously tested and approved batch of medium occurs.

Test for inhibitory properties, liquid or solid media: inoculate the appropriate medium with at least 100 CFU of the appropriate micro-organism. Incubate at the specified temperature for not less than the longest period of time specified in the test. No growth of the test micro-organism occurs.

Test for indicative properties: perform the surface-spread method, inoculating each plate with a small number (not more than 100 CFU) of the appropriate micro-organism. Incubate at the specified temperature for a period of time within the range specified in the test. Colonies are comparable in appearance and indication reactions to those previously obtained with a previously tested and approved batch of medium.

3-4. *SUITABILITY OF THE TEST METHOD*

For each product to be tested, perform the sample preparation as described in the relevant paragraph in section 4. Add each test strain at the time of mixing, in the prescribed growth medium. Inoculate the test strains individually. Use a number of micro-organisms equivalent to not more than 100 CFU in the inoculated test preparation.

Perform the test as described in the relevant paragraph in section 4 using the shortest incubation period prescribed.

The specified micro-organisms must be detected with the indication reactions as described in section 4.

Any antimicrobial activity of the product necessitates a modification of the test procedure (see 4-5-3 of general chapter *2.6.12*).

If for a given product the antimicrobial activity with respect to a micro-organism for which testing is prescribed cannot be neutralised, then it is to be assumed that the inhibited micro-organism will not be present in the product.

Table 2.6.13.-1 – *Growth promoting, inhibitory and indicative properties of media*

	Medium	Property	Test strains
Test for bile-tolerant gram-negative bacteria	Enterobacteria enrichment broth-Mossel	Growth promoting	*E. coli* *P. aeruginosa*
		Inhibitory	*S. aureus*
	Violet red bile glucose agar	Growth promoting + indicative	*E. coli* *P. aeruginosa*
Test for *Escherichia coli*	MacConkey broth	Growth promoting	*E. coli*
		Inhibitory	*S. aureus*
	MacConkey agar	Growth promoting + indicative	*E. coli*
Test for *Salmonella*	Rappaport Vassiliadis *Salmonella* enrichment broth	Growth promoting	*Salmonella enterica* subsp. *enterica* serovar Typhimurium or *Salmonella enterica* subsp. *enterica* serovar Abony
		Inhibitory	*S. aureus*
	Xylose, lysine, deoxycholate agar	Growth promoting + indicative	*Salmonella enterica* subsp. *enterica* serovar Typhimurium or *Salmonella enterica* subsp. *enterica* serovar Abony
Test for *Pseudomonas aeruginosa*	Cetrimide agar	Growth promoting	*P. aeruginosa*
		Inhibitory	*E. coli*
Test for *Staphylococcus aureus*	Mannitol salt agar	Growth promoting + indicative	*S. aureus*
		Inhibitory	*E. coli*
Test for clostridia	Reinforced medium for clostridia	Growth promoting	*Cl. sporogenes*
	Columbia agar	Growth promoting	*Cl. sporogenes*
Test for *Candida albicans*	Sabouraud dextrose broth	Growth promoting	*C. albicans*
	Sabouraud dextrose agar	Growth promoting + indicative	*C. albicans*

4. TESTING OF PRODUCTS

4-1. *BILE-TOLERANT GRAM-NEGATIVE BACTERIA*

4-1-1. **Sample preparation and pre-incubation**. Prepare a sample using a 1 in 10 dilution of not less than 1 g of the product to be examined as described in general chapter *2.6.12*, but using casein soya bean digest broth as the chosen diluent, mix and incubate at 20-25 °C for a time sufficient to resuscitate the bacteria but not sufficient to encourage multiplication of the organisms (usually 2 h but not more than 5 h).

4-1-2. **Test for absence**. Unless otherwise prescribed, use the volume corresponding to 1 g of the product, as prepared in 4-1-1, to inoculate enterobacteria enrichment broth-Mossel. Incubate at 30-35 °C for 24-48 h. Subculture on plates of violet red bile glucose agar. Incubate at 30-35 °C for 18-24 h.

The product complies with the test if there is no growth of colonies.

4-1-3. **Quantitative test**

4-1-3-1. *Selection and subculture*. Inoculate suitable quantities of enterobacteria enrichment broth-Mossel with the preparation as described under 4-1-1 and/or dilutions of it containing respectively 0.1 g, 0.01 g and 0.001 g (or 0.1 mL, 0.01 mL and 0.001 mL) of the product to be examined. Incubate at 30-35 °C for 24-48 h. Subculture each of the cultures on a plate of violet red bile glucose agar. Incubate at 30-35 °C for 18-24 h.

4-1-3-2. *Interpretation*. Growth of colonies constitutes a positive result. Note the smallest quantity of the product that gives a positive result and the largest quantity that gives a negative result. Determine from Table 2.6.13.-2 the probable number of bacteria.

Table 2.6.13.-2 – *Interpretation of results*

Results for each quantity of product			Probable number of bacteria per gram or millilitre of product
0.1 g or 0.1 mL	0.01 g or 0.01 mL	0.001 g or 0.001 mL	
+	+	+	$> 10^3$
+	+	−	$< 10^3$ and $> 10^2$
+	−	−	$< 10^2$ and > 10
−	−	−	< 10

4-2. *ESCHERICHIA COLI*

4-2-1. **Sample preparation and pre-incubation**. Prepare a sample using a 1 in 10 dilution of not less than 1 g of the product to be examined as described in general chapter *2.6.12*, and use 10 mL or the quantity corresponding to 1 g or 1 mL to inoculate a suitable amount (determined as described under 3-4) of casein soya bean digest broth, mix and incubate at 30-35 °C for 18-24 h.

4-2-2. **Selection and subculture**. Shake the container, transfer 1 mL of casein soya bean digest broth to 100 mL of MacConkey broth and incubate at 42-44 °C for 24-48 h. Subculture on a plate of MacConkey agar at 30-35 °C for 18-72 h.

4-2-3. **Interpretation**. Growth of colonies indicates the possible presence of *E. coli*. This is confirmed by identification tests.

The product complies with the test if no colonies are present or if the identification tests are negative.

4-3. *SALMONELLA*

4-3-1. **Sample preparation and pre-incubation**. Prepare the product to be examined as described in general chapter *2.6.12*, and use the quantity corresponding to not less than 10 g or 10 mL to inoculate a suitable amount (determined as described under 3-4) of casein soya bean digest broth, mix and incubate at 30-35 °C for 18-24 h.

4-3-2. **Selection and subculture**. Transfer 0.1 mL of casein soya bean digest broth to 10 mL of Rappaport Vassiliadis *Salmonella* enrichment broth and incubate at 30-35 °C for 18-24 h. Subculture on plates of xylose, lysine, deoxycholate agar. Incubate at 30-35 °C for 18-48 h.

4-3-3. **Interpretation**. The possible presence of *Salmonella* is indicated by the growth of well-developed, red colonies, with or without black centres. This is confirmed by identification tests.

The product complies with the test if colonies of the types described are not present or if the confirmatory identification tests are negative.

4-4. *PSEUDOMONAS AERUGINOSA*

4-4-1. **Sample preparation and pre-incubation**. Prepare a sample using a 1 in 10 dilution of not less than 1 g of the product to be examined as described in general chapter *2.6.12*, and use 10 mL or the quantity corresponding to 1 g or 1 mL to inoculate a suitable amount (determined as described under 3-4) of casein soya bean digest broth and mix. When testing transdermal patches, filter the volume of sample corresponding to 1 patch of the preparation described under 4-5-1 in general chapter *2.6.12* through a sterile filter membrane and place in 100 mL of casein soya bean digest broth. Incubate at 30-35 °C for 18-24 h.

4-4-2. **Selection and subculture**. Subculture on a plate of cetrimide agar and incubate at 30-35 °C for 18-72 h.

4-4-3. **Interpretation**. Growth of colonies indicates the possible presence of *P. aeruginosa*. This is confirmed by identification tests.

The product complies with the test if colonies are not present or if the confirmatory identification tests are negative.

4-5. *STAPHYLOCOCCUS AUREUS*

4-5-1. **Sample preparation and pre-incubation**. Prepare a sample using a 1 in 10 dilution of not less than 1 g of the product to be examined as described in general chapter *2.6.12*, and use 10 mL or the quantity corresponding to 1 g or 1 mL to inoculate a suitable amount (determined as described under 3-4) of casein soya bean digest broth and mix. When testing transdermal patches, filter the volume of sample corresponding to 1 patch of the preparation described under 4-5-1 in general chapter *2.6.12* through a sterile filter membrane and place in 100 mL of casein soya bean digest broth. Incubate at 30-35 °C for 18-24 h.

4-5-2. **Selection and subculture**. Subculture on a plate of mannitol salt agar and incubate at 30-35 °C for 18-72 h.

4-5-3. **Interpretation**. The possible presence of *S. aureus* is indicated by the growth of yellow/white colonies surrounded by a yellow zone. This is confirmed by identification tests.

The product complies with the test if colonies of the types described are not present or if the confirmatory identification tests are negative.

4-6. *CLOSTRIDIA*

4-6-1. **Sample preparation and heat treatment**. Prepare a sample using a 1 in 10 dilution (with a minimum total volume of 20 mL) of not less than 2 g or 2 mL of the product to be examined as described in general chapter *2.6.12*. Divide the sample into 2 portions of at least 10 mL. Heat 1 portion at 80 °C for 10 min and cool rapidly. Do not heat the other portion.

4-6-2. **Selection and subculture**. Use 10 mL or the quantity corresponding to 1 g or 1 mL of the product to be examined of both portions to inoculate suitable amounts (determined as described under 3-4) of reinforced medium for clostridia. Incubate under anaerobic conditions at 30-35 °C for 48 h. After incubation, make subcultures from each container on Columbia agar and incubate under anaerobic conditions at 30-35 °C for 48-72 h.

4-6-3. **Interpretation**. The occurrence of anaerobic growth of rods (with or without endospores) giving a negative catalase reaction indicates the presence of clostridia. This is confirmed by identification tests.

The product complies with the test if colonies of the types described are not present or if the confirmatory identification tests are negative.

4-7. *CANDIDA ALBICANS*

4-7-1. **Sample preparation and pre-incubation**. Prepare the product to be examined as described in general chapter *2.6.12*, and use 10 mL or the quantity corresponding to not less than 1 g or 1 mL to inoculate 100 mL of Sabouraud-dextrose broth and mix. Incubate at 30-35 °C for 3-5 days.

4-7-2. **Selection and subculture**. Subculture on a plate of Sabouraud-dextrose agar and incubate at 30-35 °C for 24-48 h.

4-7-3. **Interpretation**. Growth of white colonies may indicate the presence of *C. albicans*. This is confirmed by identification tests.

The product complies with the test if such colonies are not present or if the confirmatory identification tests are negative.

The following section is given for information.

5. RECOMMENDED SOLUTIONS AND CULTURE MEDIA

The following solutions and culture media have been found to be satisfactory for the purposes for which they are prescribed in the test for microbial contamination in the Pharmacopoeia. Other media may be used provided that their suitability can be demonstrated.

Stock buffer solution. Place 34 g of potassium dihydrogen phosphate in a 1000 mL volumetric flask, dissolve in 500 mL of purified water, adjust to pH 7.2 ± 0.2 with sodium hydroxide, dilute to 1000.0 mL with purified water and mix. Dispense into containers and sterilise. Store at 2-8 °C.

Phosphate buffer solution pH 7.2. Prepare a mixture of stock buffer solution and purified water (1:800 *V/V*) and sterilise.

Buffered sodium chloride-peptone solution pH 7.0

Potassium dihydrogen phosphate	3.6 g
Disodium hydrogen phosphate dihydrate	7.2 g, equivalent to 0.067 M phosphate
Sodium chloride	4.3 g
Peptone (meat or casein)	1.0 g
Purified water	1000 mL

Sterilise in an autoclave using a validated cycle.

Casein soya bean digest broth

Pancreatic digest of casein	17.0 g
Papaic digest of soya bean	3.0 g
Sodium chloride	5.0 g
Dipotassium hydrogen phosphate	2.5 g
Glucose monohydrate	2.5 g
Purified water	1000 mL

Adjust the pH so that after sterilisation it is 7.3 ± 0.2 at 25 °C. Sterilise in an autoclave using a validated cycle.

Casein soya bean digest agar

Pancreatic digest of casein	15.0 g
Papaic digest of soya bean	5.0 g
Sodium chloride	5.0 g
Agar	15.0 g
Purified water	1000 mL

Adjust the pH so that after sterilisation it is 7.3 ± 0.2 at 25 °C. Sterilise in an autoclave using a validated cycle.

Sabouraud-dextrose agar

Dextrose	40.0 g
Mixture of peptic digest of animal tissue and pancreatic digest of casein (1:1)	10.0 g
Agar	15.0 g
Purified water	1000 mL

Adjust the pH so that after sterilisation it is 5.6 ± 0.2 at 25 °C. Sterilise in an autoclave using a validated cycle.

Potato dextrose agar

Infusion from potatoes	200 g
Dextrose	20.0 g
Agar	15.0 g
Purified water	1000 mL

Adjust the pH so that after sterilisation it is 5.6 ± 0.2 at 25 °C. Sterilise in an autoclave using a validated cycle.

Sabouraud-dextrose broth

Dextrose	20.0 g
Mixture of peptic digest of animal tissue and pancreatic digest of casein (1:1)	10.0 g
Purified water	1000 mL

Adjust the pH so that after sterilisation it is 5.6 ± 0.2 at 25 °C. Sterilise in an autoclave using a validated cycle.

Enterobacteria enrichment broth-Mossel

Pancreatic digest of gelatin	10.0 g
Glucose monohydrate	5.0 g
Dehydrated ox bile	20.0 g
Potassium dihydrogen phosphate	2.0 g
Disodium hydrogen phosphate dihydrate	8.0 g
Brilliant green	15 mg
Purified water	1000 mL

Adjust the pH so that after heating it is 7.2 ± 0.2 at 25 °C. Heat at 100 °C for 30 min and cool immediately.

Violet red bile glucose agar

Yeast extract	3.0 g
Pancreatic digest of gelatin	7.0 g
Bile salts	1.5 g
Sodium chloride	5.0 g
Glucose monohydrate	10.0 g
Agar	15.0 g
Neutral red	30 mg
Crystal violet	2 mg
Purified water	1000 mL

Adjust the pH so that after heating it is 7.4 ± 0.2 at 25 °C. Heat to boiling; do not heat in an autoclave.

MacConkey broth

Pancreatic digest of gelatin	20.0 g
Lactose monohydrate	10.0 g
Dehydrated ox bile	5.0 g
Bromocresol purple	10 mg
Purified water	1000 mL

Adjust the pH so that after sterilisation it is 7.3 ± 0.2 at 25 °C. Sterilise in an autoclave using a validated cycle.

MacConkey agar

Pancreatic digest of gelatin	17.0 g
Peptones (meat and casein)	3.0 g
Lactose monohydrate	10.0 g
Sodium chloride	5.0 g
Bile salts	1.5 g
Agar	13.5 g
Neutral red	30.0 mg
Crystal violet	1 mg
Purified water	1000 mL

Adjust the pH so that after sterilisation it is 7.1 ± 0.2 at 25 °C. Boil for 1 min with constant shaking then sterilise in an autoclave using a validated cycle.

Rappaport Vassiliadis *Salmonella* enrichment broth

Soya peptone	4.5 g
Magnesium chloride hexahydrate	29.0 g
Sodium chloride	8.0 g
Dipotassium phosphate	0.4 g
Potassium dihydrogen phosphate	0.6 g
Malachite green	0.036 g
Purified water	1000 mL

Dissolve, warming gently. Sterilise in an autoclave using a validated cycle, at a temperature not exceeding 115 °C. The pH is to be 5.2 ± 0.2 at 25 °C after heating and autoclaving.

Xylose, lysine, deoxycholate agar

Xylose	3.5 g
L-Lysine	5.0 g
Lactose monohydrate	7.5 g
Sucrose	7.5 g
Sodium chloride	5.0 g
Yeast extract	3.0 g
Phenol red	80 mg
Agar	13.5 g
Sodium deoxycholate	2.5 g
Sodium thiosulfate	6.8 g
Ferric ammonium citrate	0.8 g
Purified water	1000 mL

Adjust the pH so that after heating it is 7.4 ± 0.2 at 25 °C. Heat to boiling, cool to 50 °C and pour into Petri dishes. Do not heat in an autoclave.

Cetrimide agar

Pancreatic digest of gelatin	20.0 g
Magnesium chloride	1.4 g
Dipotassium sulfate	10.0 g
Cetrimide	0.3 g
Agar	13.6 g
Purified water	1000 mL
Glycerol	10.0 mL

Heat to boiling for 1 min with shaking. Adjust the pH so that after sterilisation it is 7.2 ± 0.2 at 25 °C. Sterilise in an autoclave using a validated cycle.

Mannitol salt agar

Pancreatic digest of casein	5.0 g
Peptic digest of animal tissue	5.0 g
Beef extract	1.0 g
D-Mannitol	10.0 g
Sodium chloride	75.0 g
Agar	15.0 g
Phenol red	0.025 g
Purified water	1000 mL

Heat to boiling for 1 min with shaking. Adjust the pH so that after sterilisation it is 7.4 ± 0.2 at 25 °C. Sterilise in an autoclave using a validated cycle.

Reinforced medium for clostridia

Beef extract	10.0 g
Peptone	10.0 g
Yeast extract	3.0 g
Soluble starch	1.0 g
Glucose monohydrate	5.0 g
Cysteine hydrochloride	0.5 g
Sodium chloride	5.0 g
Sodium acetate	3.0 g
Agar	0.5 g
Purified water	1000 mL

Hydrate the agar, dissolve by heating to boiling with continuous stirring. If necessary, adjust the pH so that after sterilisation it is 6.8 ± 0.2 at 25 °C. Sterilise in an autoclave using a validated cycle.

Columbia agar

Pancreatic digest of casein	10.0 g
Meat peptic digest	5.0 g
Heart pancreatic digest	3.0 g
Yeast extract	5.0 g
Maize starch	1.0 g
Sodium chloride	5.0 g
Agar, according to gelling power	10.0-15.0 g
Purified water	1000 mL

Hydrate the agar, dissolve by heating to boiling with continuous stirring. If necessary, adjust the pH so that after sterilisation it is 7.3 ± 0.2 at 25 °C. Sterilise in an autoclave using a validated cycle. Allow to cool to 45-50 °C; add, where necessary, gentamicin sulfate corresponding to 20 mg of gentamicin base and pour into Petri dishes.

01/2010:20614
corrected 7.0

2.6.14. BACTERIAL ENDOTOXINS

The test for bacterial endotoxins (BET) is used to detect or quantify endotoxins from gram-negative bacteria using amoebocyte lysate from the horseshoe crab (*Limulus polyphemus* or *Tachypleus tridentatus*). There are 3 techniques for this test: the gel-clot technique, which is based on gel formation; the turbidimetric technique, based on the development of turbidity after cleavage of an endogenous substrate; and the chromogenic technique, based on the development of colour after cleavage of a synthetic peptide-chromogen complex.

The following 6 methods are described in the present chapter:

Method A. Gel-clot method: limit test

Method B. Gel-clot method: quantitative test

Method C. Turbidimetric kinetic method

Method D. Chromogenic kinetic method

Method E. Chromogenic end-point method

Method F. Turbidimetric end-point method

Proceed by any of the 6 methods for the test. In the event of doubt or dispute, the final decision is made based upon method A unless otherwise indicated in the monograph.

The test is carried out in a manner that avoids endotoxin contamination.

1. APPARATUS

Depyrogenate all glassware and other heat-stable apparatus in a hot-air oven using a validated process. A commonly used minimum time and temperature is 30 minutes at 250 °C. If employing plastic apparatus, such as microtitre plates and pipette tips for automatic pipetters, use apparatus shown to be free of detectable endotoxin and which does not interfere in the test.

NOTE: in this chapter, the term 'tube' includes all types of receptacles, for example microtitre plate wells.

2. REAGENTS, TEST SOLUTIONS

(1) Amoebocyte lysate

Amoebocyte lysate is a lyophilised product obtained from amoebocyte lysate from the horseshoe crab (*Limulus polyphemus* or *Tachypleus tridentatus*). This reagent refers only to a product manufactured in accordance with the regulations of the competent authority.

NOTE: amoebocyte lysate reacts with some β-glucans in addition to endotoxins. Amoebocyte lysate preparations which do not react with glucans are available; they are prepared by removing from amoebocyte lysate the G factor, which reacts with glucans, or by inhibiting the G factor reacting system of amoebocyte lysate. These preparations may be used for endotoxin testing in the presence of glucans.

(2) Lysate solution

Dissolve amoebocyte lysate in water for BET or in a buffer, as recommended by the lysate manufacturer, by gentle stirring. Store the reconstituted lysate, refrigerated or frozen, as indicated by the manufacturer.

(3) Water for BET (water for bacterial endotoxins test)

Water for injections R or water produced by other procedures that shows no reaction with the lysate employed at the detection limit of the reagent.

3. PREPARATION OF THE STANDARD ENDOTOXIN STOCK SOLUTION

The standard endotoxin stock solution is prepared from an endotoxin reference standard that has been calibrated against the International Standard, for example *endotoxin standard BRP*.

Endotoxin is expressed in International Units (IU). The equivalence in IU of the International Standard is stated by the World Health Organization.

NOTE: one International Unit (IU) of endotoxin is equal to one Endotoxin Unit (E.U.).

Follow the specifications in the package leaflet and on the label for preparation and storage of the standard endotoxin stock solution.

4. PREPARATION OF THE STANDARD ENDOTOXIN SOLUTIONS

After vigorously mixing the standard endotoxin stock solution, prepare appropriate serial dilutions of this solution using water for BET.

Use the solutions as soon as possible to avoid loss of activity by adsorption.

5. PREPARATION OF THE TEST SOLUTIONS

Prepare the test solutions by dissolving or diluting active substances or medicinal products using water for BET. Some substances or preparations may be more appropriately dissolved or diluted in other aqueous solutions. If necessary, adjust the pH of the test solution (or dilution thereof) so that the pH of the mixture of the lysate and test solution falls within the pH range specified by the lysate manufacturer, usually 6.0 to 8.0. The pH may be adjusted by the use of acid, base or a suitable buffer, as recommended by the lysate manufacturer. Acids and bases may be prepared from concentrates or solids with water for BET in containers free of detectable endotoxin. Buffers must be validated to be free of detectable endotoxin and interfering factors.

6. DETERMINATION OF THE MAXIMUM VALID DILUTION

The Maximum Valid Dilution (MVD) is the maximum allowable dilution of a sample at which the endotoxin limit can be determined. Determine the MVD using the following formulae:

$$\text{MVD} = \frac{\text{endotoxin limit} \times \text{concentration of test solution}}{\lambda}$$

Endotoxin limit: the endotoxin limit for active substances administered parenterally, defined on the basis of dose, is equal to:

$$\frac{K}{M}$$

K = threshold pyrogenic dose of endotoxin per kilogram of body mass,

M = maximum recommended bolus dose of product per kilogram of body mass.

When the product is to be injected at frequent intervals or infused continuously, M is the maximum total dose administered in a single hour period.

The endotoxin limit for active substances administered parenterally is specified in units such as IU/mL, IU/mg, IU/Unit of biological activity, etc., in monographs.

Concentration of test solution:

- mg/mL if the endotoxin limit is specified by mass (IU/mg),
- Units/mL if the endotoxin limit is specified by unit of biological activity (IU/Unit),
- ml/mL if the endotoxin limit is specified by volume (IU/mL).

λ = the labelled lysate sensitivity in the gel-clot technique (IU/mL) or the lowest concentration used in the standard curve of the turbidimetric or chromogenic techniques.

7. GEL-CLOT TECHNIQUE (METHODS A AND B)

The gel-clot technique allows detection or quantification of endotoxins and is based on clotting of the lysate in the presence of endotoxins. The minimum concentration of endotoxins required to cause the lysate to clot under standard conditions is the labelled lysate sensitivity. To ensure both the precision and validity of the test, confirm the labelled lysate sensitivity and perform the test for interfering factors as described under 1. Preparatory testing.

1. PREPARATORY TESTING

(i) Confirmation of the labelled lysate sensitivity

Confirm in 4 replicates the labelled sensitivity λ, expressed in IU/mL, of the lysate solution prior to use in the test.

Confirmation of the lysate sensitivity is carried out when a new lot of lysate is used or when there is any change in the test conditions which may affect the outcome of the test.

Prepare standard solutions of at least 4 concentrations equivalent to 2λ, λ, 0.5λ and 0.25λ by diluting the standard endotoxin stock solution with water for BET.

Mix a volume of the lysate solution with an equal volume of 1 of the standard solutions (such as 0.1 mL aliquots) in each tube. When single test vials or ampoules containing lyophilised lysate are employed, add solutions of standards directly to the vial or ampoule. Incubate the reaction mixture for a constant period according to the recommendations of the lysate manufacturer (usually at 37 ± 1 °C for 60 ± 2 min), avoiding vibration. Test the integrity of the gel: for tubes, take each tube in turn directly from the incubator and invert it through approximately 180° in one smooth motion. If a firm gel has formed that remains in place upon inversion, record the result as positive. A result is negative if an intact gel is not formed.

The test is considered valid when the lowest concentration of the standard solutions shows a negative result in all replicate tests.

The end-point is the lowest concentration in the series of decreasing concentrations of standard endotoxin that clots the lysate. Determine the geometric mean end-point concentration by calculting the mean of the logarithms of the end-point concentrations of the 4 dilution series, take the antilogarithm of this value, as indicated by the following expression:

$$\text{Geometric mean end-point concentration} = \text{antilog}\frac{\sum e}{f}$$

$\sum e$ = sum of the $\log_{10}$ end-point concentrations of the dilution series used,

f = number of replicates.

The geometric mean end-point concentration is the measured sensitivity of the lysate solution (IU/mL). If this is not less than 0.5λ and not more than 2λ, the labelled sensitivity is confirmed and is used in the tests performed with this lysate.

(ii) Test for interfering factors

Prepare solutions A, B, C and D as shown in Table 2.6.14.-1, and use the test solutions at a dilution less than the MVD, not containing any detectable endotoxins, operating as described under 1. Preparatory testing, (i) Confirmation of the labelled lysate sensitivity.

The geometric mean end-point concentrations of solutions B and C are determined using the expression described in 1. Preparatory testing, (i) Confirmation of the labelled lysate sensitivity.

Table 2.6.14.-1

Solution	Endotoxin concentration/Solution to which endotoxin is added	Diluent	Dilution factor	Endotoxin concentration	Number of replicates
A	None/Test solution	-	-	-	4
B	2λ/Test solution	Test solution	1	2λ	4
			2	1λ	4
			4	0.5λ	4
			8	0.25λ	4
C	2λ/Water for BET	Water for BET	1	2λ	2
			2	1λ	2
			4	0.5λ	2
			8	0.25λ	2
D	None/Water for BET	-	-	-	2

Solution A = solution of the preparation being examined that is free of detectable endotoxins.
Solution B = test for interference.
Solution C = control of the labelled lysate sensitivity.
Solution D = negative control (water for BET).

The test for interfering factors must be repeated when any changes are made to the experimental conditions that are likely to influence the result of the test.

The test is considered valid when all replicates of solutions A and D show no reaction and the result of solution C confirms the labelled lysate sensitivity.

If the sensitivity of the lysate determined with solution B is not less than 0.5λ and not greater than 2λ, the test solution does not contain interfering factors under the experimental conditions used. Otherwise, the test solution interferes with the test.

If the preparation being examined interferes with the test at a dilution less than the MVD, repeat the test for interfering factors using a greater dilution, not exceeding the MVD. The use of a more sensitive lysate permits a greater dilution of the preparation being examined and this may contribute to the elimination of interference.

Interference may be overcome by suitable validated treatment, such as filtration, neutralisation, dialysis or heat treatment. To establish that the treatment chosen effectively eliminates interference without loss of endotoxins, repeat the test for interfering factors using the preparation being examined to which the standard endotoxin has been added and which has then been submitted to the chosen treatment.

2. LIMIT TEST (METHOD A)

(i) Procedure

Prepare solutions A, B, C and D as shown in Table 2.6.14.-2, and perform the test on these solutions following the procedure described under 1. Preparatory testing, (i) Confirmation of the labelled lysate sensitivity.

Table 2.6.14.-2

Solution	Endotoxin concentration/Solution to which endotoxin is added	Number of replicates
A	None/Diluted test solution	2
B	2λ/Diluted test solution	2
C	2λ/Water for BET	2
D	None/Water for BET	2

Prepare solution A and solution B (positive product control) using a dilution not greater than the MVD and treatments as described in 1. Preparatory testing, (ii) Test for interfering factors. Solutions B and C (positive controls) contain the standard endotoxin at a concentration corresponding to twice the labelled lysate sensitivity. Solution D (negative control) consists of water for BET.

(ii) Interpretation

The test is considered valid when both replicates of solution B and C are positive and those of solution D are negative.

When a negative result is found for both replicates of solution A, the preparation being examined complies with the test.

When a positive result is found for both replicates of solution A, the preparation being examined does not comply with the test.

When a positive result is found for one replicate of solution A and a negative result is found for the other, repeat the test. In the repeat test, the preparation being examined complies with the test if a negative result is found for both replicates of solution A. The preparation does not comply with the test if a positive result is found for one or both replicates of solution A.

However, if the preparation does not comply with the test at a dilution less than the MVD, the test may be repeated using a greater dilution, not exceeding the MVD.

3. QUANTITATIVE TEST (METHOD B)

(i) Procedure

The test quantifies bacterial endotoxins in the test solution by titration to an end-point. Prepare solutions A, B, C and D as shown in Table 2.6.14.-3, and test these solutions according to the procedure described under 1. Preparatory testing, (i) Confirmation of the labelled lysate sensitivity.

(ii) Calculation and interpretation

The test is considered valid when the following 3 conditions are met:

(a) both replicates of solution D (negative control) are negative,

(b) both replicates of solution B (positive product control) are positive,

(c) the geometric mean end-point concentration of solution C is in the range of 0.5λ to 2λ.

To determine the endotoxin concentration of solution A, calculate the end-point concentration for each replicate, by multiplying each end-point dilution factor by λ.

The endotoxin concentration in the test solution is the end-point concentration of the replicates. If the test is conducted with a diluted test solution, calculate the concentration of endotoxin in the original solution by multiplying the result by the dilution factor.

If none of the dilutions of the test solution is positive in a valid test, report the endotoxin concentration as less than λ (or, if a diluted sample was tested, report as less than the lowest dilution factor of the sample × λ). If all dilutions are positive, the endotoxin concentration is reported as equal to or greater than the largest dilution factor multiplied by λ (e.g. in Table 2.6.14.-3, the initial dilution factor × 8 × λ).

Table 2.6.14.-3

Solution	Endotoxin concentration/Solution to which endotoxin is added	Diluent	Dilution factor	Endotoxin concentration	Number of replicates
A	None/Test solution	Water for BET	1	-	2
			2	-	2
			4	-	2
			8	-	2
B	2λ/Test solution		1	2λ	2
C	2λ/Water for BET	Water for BET	1	2λ	2
			2	1λ	2
			4	0.5λ	2
			8	0.25λ	2
D	None/Water for BET	-	-	-	2

Solution A = test solution at the dilution, not exceeding the MVD, with which the test for interfering factors was carried out. Subsequent dilution of the test solution must not exceed the MVD. Use water for BET to make a dilution series of 4 tubes containing the test solution at concentrations of 1, 1/2, 1/4 and 1/8, relative to the dilution used in the test for interfering factors. Other dilutions up to the MVD may be used as appropriate.

Solution B = solution A containing standard endotoxin at a concentration of 2λ (positive product control).

Solution C = a dilution series of 4 tubes of water for BET containing the standard endotoxin at concentrations of 2λ, λ, 0.5λ and 0.25λ.

Solution D = water for BET (negative control).

The preparation being examined meets the requirements of the test if the endotoxin concentration in both replicates is less than that specified in the monograph.

8. PHOTOMETRIC QUANTITATIVE TECHNIQUES (METHODS C, D, E AND F)

1. TURBIDIMETRIC TECHNIQUE (METHODS C AND F)

This technique is a photometric test to measure the increase in turbidity. Based on the test principle employed, this technique may be classified as being either the end-point-turbidimetric test or the kinetic-turbidimetric test.

The end-point-turbidimetric test (Method F) is based on the quantitative relationship between the endotoxin concentration and the turbidity (absorbance or transmission) of the reaction mixture at the end of an incubation period.

The kinetic-turbidimetric test (Method C) is a method to measure either the time (onset time) needed for the reaction mixture to reach a predetermined absorbance or transmission, or the rate of turbidity development.

The test is carried out at the incubation temperature recommended by the lysate manufacturer (usually 37 ± 1 °C).

2. CHROMOGENIC TECHNIQUE (METHODS D AND E)

This technique is used to measure the chromophore released from a suitable chromogenic peptide by the reaction of endotoxins with the lysate. Depending on the test principle employed, this technique may be classified as being either the end-point-chromogenic test or the kinetic-chromogenic test.

The end-point-chromogenic test (Method E) is based on the quantitative relationship between the endotoxin concentration and the quantity of chromophore released at the end of an incubation period.

The kinetic-chromogenic test (Method D) measures either the time (onset time) needed for the reaction mixture to reach a predetermined absorbance, or the rate of colour development.

The test is carried out at the incubation temperature recommended by the lysate manufacturer (usually 37 ± 1 °C).

3. PREPARATORY TESTING

To assure the precision or validity of the turbidimetric and chromogenic techniques, preparatory tests are conducted to show that the criteria for the standard curve are satisfied and that the test solution does not interfere with the test.

Validation of the test method is required when any changes are made to the experimental conditions that are likely to influence the result of the test.

(i) Assurance of criteria for the standard curve

The test must be carried out for each lot of lysate reagent.

Using the standard endotoxin solution, prepare at least 3 endotoxin concentrations within the range indicated by the lysate manufacturer to generate the standard curve. Perform the test using at least 3 replicates of each standard endotoxin solution as recommended by the lysate manufacturer (volume ratios, incubation time, temperature, pH, etc.).

If the desired range is greater than 2 $\log_{10}$ in the kinetic methods, additional standards must be included to bracket each $\log_{10}$ increase in the range of the standard curve.

The absolute value of the correlation coefficient, $|r|$, must be greater than or equal to 0.980, for the range of endotoxin concentrations set up.

(ii) Test for interfering factors

Select an endotoxin concentration at or near the middle of the endotoxin standard curve.

Prepare solutions A, B, C and D as shown in Table 2.6.14.-4. Perform the test on at least 2 replicates of these solutions as recommended by the lysate manufacturer (volume of test solution and lysate solution, volume ratio of test solution to lysate solution, incubation time, etc.).

Table 2.6.14.-4.

Solution	Endotoxin concentration	Solution to which endotoxin is added	Number of replicates
A	None	Test solution	Not less than 2
B	Middle concentration of the standard curve	Test solution	Not less than 2
C	At least 3 concentrations (lowest concentration is designated λ)	Water for BET	Each concentration not less than 2
D	None	Water for BET	Not less than 2

Solution A = test solution, that may be diluted not to exceed the MVD.

Solution B = preparation to be examined at the same dilution as solution A, containing added endotoxin at a concentration equal to or near the middle of the standard curve.

Solution C = standard endotoxin solution at the concentrations used in the validation of the method as described under 3. Preparatory testing, (i) Assurance of criteria for the standard curve (positive controls).

Solution D = water for BET (negative control).

The test is considered valid when the following conditions are met:

- the absolute value of the correlation coefficient of the standard curve generated using solution C is greater than or equal to 0.980;
- the result with solution D does not exceed the limit of the blank value required in the description of the lysate reagent employed, or it is less than the endotoxin detection limit of the lysate reagent employed.

Calculate the mean recovery of the added endotoxin by subtracting the mean endotoxin concentration in the solution (if any) (solution A, Table 2.6.14.-4) from that in the solution containing the added endotoxin (solution B, Table 2.6.14.-4).

The test solution is considered free of interfering factors if under the conditions of the test, the measured concentration of the endotoxin added to the test solution is within 50-200 per cent of the known added endotoxin concentration, after subtraction of any endotoxin detected in the solution without added endotoxin.

When the endotoxin recovery is out of the specified range, the test solution is considered to contain interfering factors. Repeat the test using a greater dilution, not exceeding the MVD. Furthermore, interference of the test solution or diluted test solution not to exceed the MVD may be eliminated by suitable validated treatment, such as filtration, neutralisation, dialysis or heat treatment. To establish that the treatment chosen effectively eliminates interference without loss of endotoxins, repeat the test for interfering factors using the preparation being examined to which the standard endotoxin has been added and which has then been submitted to the chosen treatment.

4. TEST

(i) Procedure

Follow the procedure described in 3. Preparatory testing, (ii) Test for interfering factors.

(ii) Calculation

Calculate the endotoxin concentration of each replicate of solution A using the standard curve generated by the positive control solution C.

The test is considered valid when the following 3 requirements are met:

(1) the results obtained with solution C comply with the requirements for validation defined under 3. Preparatory testing, (i) Assurance of criteria for the standard curve,

(2) the endotoxin recovery, calculated from the endotoxin concentration found in solution B after subtracting the endotoxin concentration found in solution A, is within the range of 50-200 per cent,

(3) the result obtained with solution D (negative control) does not exceed the limit of the blank value required in the description of the lysate employed, or it is less than the endotoxin detection limit of the lysate reagent employed.

(iii) Interpretation

The preparation being examined complies with the test if the mean endotoxin concentration of the replicates of solution A, after correction for dilution and concentration, is less than the endotoxin limit for the product.

Guidelines on the test for bacterial endotoxins are given in general chapter 5.1.10.

01/2008:20615

2.6.15. PREKALLIKREIN ACTIVATOR

Prekallikrein activator (PKA) activates prekallikrein to kallikrein and may be assayed by its ability to cleave a chromophore from a synthetic peptide substrate so that the rate of cleavage can be measured spectrophotometrically and the concentration of PKA calculated by comparison with a reference preparation calibrated in International Units.

The International Unit is the activity of a stated amount of the International Standard which consists of freeze-dried prekallikrein activator. The equivalence in International Units of the International Standard is stated by the World Health Organization.

REAGENTS

Prekallikrein activator in albumin BRP is calibrated in International Units by comparison with the International Standard.

Buffer A. Dissolve 6.055 g of *tris(hydroxymethyl)aminomethane R*, 1.17 g of *sodium chloride R*, 50 mg of *hexadimethrine bromide R* and 0.100 g of *sodium azide R* in *water R*. Adjust to pH 8.0 with *2 M hydrochloric acid R* and dilute to 1000 mL with *water R*.

Buffer B. Dissolve 6.055 g of *tris(hydroxymethyl)aminomethane R* and 8.77 g of *sodium chloride R* in *water R*. Adjust to pH 8.0 with *2 M hydrochloric acid R* and dilute to 1000 mL with *water R*.

PREPARATION OF PREKALLIKREIN SUBSTRATE

To avoid coagulation activation, blood or plasma used for the preparation of prekallikrein must come into contact only with plastics or silicone-treated glass surfaces.

Draw 9 volumes of human blood into 1 volume of anticoagulant solution (ACD, CPD or 38 g/L solution of *sodium citrate R*) to which 1 mg/mL of *hexadimethrine bromide R* has been added. Centrifuge the mixture at 3600 *g* for 5 min. Separate the plasma and centrifuge again at 6000 *g* for 20 min to sediment platelets. Separate the platelet-poor plasma and dialyse against 10 volumes of buffer A for 20 h. Apply the dialysed plasma to a chromatography column containing *agarose-DEAE for ion-exchange chromatography R* which has been equilibrated in buffer A and is equal to twice the volume of the plasma. Elute from the column with buffer A at 20 mL/cm^2/h. Collect the eluate in fractions and record the absorbance at 280 nm (*2.2.25*). Pool the fractions containing the first protein peak so that the volume of the pool is about 1.2 times the volume of the platelet-poor plasma.

Test the substrate pool for absence of kallikrein activity by mixing 1 part with 20 parts of the pre-warmed chromogenic substrate solution to be used in the assay and incubate at 37 °C for 2 min. The substrate is suitable if the increase in absorbance is less than 0.001 per minute. Add to the pooled solution 7 g/L of *sodium chloride R* and filter through a membrane filter (nominal pore size 0.45 µm). Freeze the filtrate in portions and store at – 25 °C; the substrate may be freeze-dried before storage.

Carry out all procedures from the beginning of the chromatography to freezing in portions during a single working day.

METHOD

The assay may be carried out using an automated enzyme analyser or a suitable microtitre plate system allowing kinetic measurements, with appropriate software for calculation of results. Standards, samples and prekallikrein substrate may be diluted as necessary using buffer B.

Incubate diluted standards or samples with prekallikrein substrate for 10 min such that the volume of the undiluted sample does not exceed 1/10 of the total volume of the incubation mixture to avoid errors caused by variation in ionic strength and pH in the incubation mixture. Incubate the mixture or a part thereof with at least an equal volume of a solution of a suitable synthetic chromogenic substrate, known to be specific for kallikrein (for example, *N-benzoyl-L-prolyl-L-phenylalanyl-L-arginine 4-nitroanilide acetate R* or *D-prolyl-L-phenylalanyl-L-arginine 4-nitroanilide dihydrochloride R*), dissolved in buffer B. Record the rate of change in absorbance per minute for 2-10 min at the wavelength specific for the substrate used. Prepare a blank for each mixture of sample or standard using buffer B instead of prekallikrein substrate.

Depending on the method used, ΔA/min has to be corrected by subtracting the value obtained for the corresponding blank without the prekallikrein substrate. The results may be calculated using a standard curve, a parallel-line or a slope ratio assay or any other suitable statistical method. Plot a calibration curve using the values thus obtained for the reference preparation and the respective concentrations; use the curve to determine the PKA activity of the preparation to be examined.

01/2011:20616

2.6.16. TESTS FOR EXTRANEOUS AGENTS IN VIRAL VACCINES FOR HUMAN USE

In those tests that require prior neutralisation of the virus, use specific antibodies of non-human, non-simian origin; if the virus has been propagated in avian tissues, the antibodies must also be of non-avian origin. To prepare antiserum, use an immunising antigen produced in cell culture from a species different from that used for the production of the vaccine and free from extraneous agents. Where the use of SPF eggs is prescribed, the eggs are obtained from a flock free from specified pathogens (*5.2.2*).

VIRUS SEED LOT

Take samples of the virus seed lot at the time of harvesting and, if they are not tested immediately, keep them at a temperature below – 40 °C.

Adult mice. Inoculate each of not fewer than 10 adult mice, each weighing 15-20 g, intracerebrally with 0.03 mL and intraperitoneally with 0.5 mL of the virus seed lot. Observe the mice for at least 21 days. Carry out an autopsy of all mice that die after the first 24 h of the test or that show signs of illness, and examine for evidence of viral infection, both by direct macroscopical observation and by subinoculation of appropriate tissue suspensions by the intracerebral and intraperitoneal routes into not fewer than 5 additional mice, which are observed for 21 days. The virus seed lot complies with the test if no mouse shows evidence of infection attributable to the seed lot. The test is not valid unless at least 80 per cent of the original inoculated mice survive the observation period.

Suckling mice. Inoculate each of not fewer than 20 mice, each less than 24 h old, intracerebrally with 0.01 mL and intraperitoneally with at least 0.1 mL of the virus seed lot. Observe the mice daily for at least 14 days. Carry out an autopsy of all mice that die after the first 24 h of the test or that show signs of illness, and examine for evidence of viral infection, both by direct macroscopical observation and by subinoculation of appropriate tissue suspensions by the intracerebral and intraperitoneal routes into not fewer than 5 additional suckling mice, which are observed daily for 14 days. The virus seed lot passes the test if no mouse shows evidence of infection attributable to the seed lot. The test is not valid unless at least 80 per cent of the original inoculated mice survive the observation period.

Guinea-pigs. Inoculate intraperitoneally into each of not fewer than 5 guinea pigs, each weighing 350-450 g, 5.0 mL of the virus seed lot. Observe the animals for at least 42 days for signs of disease. Carry out an autopsy of all guinea-pigs that die after the first 24 h of the test or that show signs of illness, and examine macroscopically; examine the tissues both microscopically and culturally for evidence of infection. Euthanise animals that survive the observation period and examine in a similar manner. The virus seed lot passes the test if no guinea-pig shows evidence of infection attributable to the seed lot. The test is not valid unless at least 80 per cent of the guinea-pigs survive the observation period.

Spiroplasmas. Virus seed lots produced in insect cells are demonstrated by a validated method approved by the competent authority to be free of spiroplasmas.

VIRUS SEED LOT AND VIRUS HARVESTS

Take samples at the time of harvesting and, if not tested immediately, keep them at a temperature below – 40 °C.

Bacterial and fungal sterility. A 10 mL sample complies with the test for sterility (*2.6.1*).

Mycoplasmas. A 10 mL sample complies with the test for mycoplasmas (*2.6.7*).

Mycobacteria (*2.6.2*). A 5 mL sample is tested for the presence of *Mycobacterium* spp. by culture methods known to be sensitive for the detection of these organisms.

Test in cell culture for other extraneous agents. Neutralised samples equivalent, unless otherwise prescribed, to 500 human doses of vaccine or 50 mL, whichever is the greater, are tested for the presence of extraneous agents by inoculation into continuous simian kidney and human cell cultures. If the virus is grown in simian or human cells, the neutralised virus harvest is tested on a separate culture of these cells. If the virus is grown in a mammalian or avian cell system other than simian or human, cells of that species, but from a separate batch, are also inoculated. The cells are incubated at 36 ± 1 °C and observed for a period of 14 days. The virus seed lot or harvest passes the tests if none of the cell cultures show evidence of the presence of any extraneous agents. The test is not valid unless at least 80 per cent of the cell cultures remain viable.

Avian viruses (only required for virus seed lot propagated in avian tissues and for virus harvest propagated in primary avian tissues). Neutralise a sample equivalent to 100 human doses of vaccine or 10 mL, whichever is the greater. Using 0.5 mL per egg, inoculate a group of fertilised SPF eggs, 9-11 days old, by the allantoic route and a second group, 5-7 days old, into the yolk sac. Incubate for 7 days. The virus seed lot or harvest complies with the test if the allantoic and yolk sac fluids show no sign of the presence of any haemagglutinating agent and if all embryos and chorio-allantoic membranes, examined for gross pathology, are normal. The test is not valid unless at least 80 per cent of the inoculated eggs survive for 7 days.

Insect viruses (only required for virus propagated in insect cells). Neutralised samples equivalent, unless otherwise prescribed, to 500 human doses of vaccine or 50 mL, whichever is the greater, are tested for the presence of extraneous agents by inoculation into at least one cell culture different from that used in production and permissible to insect viruses, and that allows detection of human arboviruses. The choice of cells is approved by the competent authority and takes into account the origin of the production cells and the likely contaminants that may be detected by the chosen cells. The cells are incubated at 27 ± 1 °C and observed for a period of 14 days. The virus seed lot or harvest passes the tests if none of the cell cultures show evidence of the presence of any extraneous agents. The test is not valid unless at least 80 per cent of the cell cultures remain viable.

PRODUCTION CELL CULTURE: CONTROL CELLS

Examine the control cells microscopically for freedom from any virus causing cytopathic degeneration throughout the time of incubation of the inoculated production cell cultures or for not less than 14 days beyond the time of inoculation of the production vessels, whichever is the longer. The test is not valid unless at least 80 per cent of the control cell cultures survive to the end of the observation period.

At 14 days or at the time of the last virus harvest, whichever is the longer, carry out the tests described below.

Haemadsorbing viruses. Examine not fewer than 25 per cent of the control cultures for the presence of haemadsorbing viruses by the addition of guinea-pig red blood cells. If the test for haemadsorbing viruses is not feasible, carry out a test for haemagglutination viruses. If the guinea-pig red blood cells have been stored, they shall have been stored at 5 ± 3 °C for not more than 7 days. Read half of the cultures after incubation at 5 ± 3 °C for 30 min and the other half after incubation at 20-25 °C for 30 min. No evidence of haemadsorbing agents is found.

Tests in cell cultures for other extraneous agents. Pool the supernatant fluids from the control cells and examine for the presence of extraneous agents by inoculation of simian kidney and human cell cultures. If the virus is grown in a mammalian cell system other than simian or human, cells of that species, but from a separate batch, are also inoculated. In each cell system, at least 5 mL is tested. Incubate the inoculated cultures at 36 ± 1 °C and observe for a period of 14 days. No evidence of extraneous agents is found.

If the production cell culture is maintained at a temperature different from 36 ± 1 °C, a supplementary test for extraneous agents is carried out at the production temperature using the same type of cells as used for growth of the virus.

If the virus is grown in insect cells the pooled supernatant is also inoculated into at least one cell culture different from that used in production and permissible to insect viruses, and that allows detection of human arboviruses. The cells are incubated at 27 ± 1 °C for 14 days. No evidence of extraneous agents is found.

Avian leucosis viruses (required only if the virus is propagated in primary avian tissues). Carry out a test for avian leucosis viruses using 5 mL of the supernatant fluid from the control cells.

CONTROL EGGS

Haemagglutinating agents. Examine 0.25 mL of the allantoic fluid from each egg for haemagglutinating agents by mixing directly with chicken red blood cells and after a passage in SPF eggs carried out as follows: inoculate a 5 mL sample of the pooled amniotic fluids from the control eggs in 0.5 mL volumes into the allantoic cavity and into the amniotic cavity of SPF eggs. The control eggs comply with the test if no evidence of the presence of haemagglutinating agents is found in either test.

Avian leucosis viruses. Use a 10 mL sample of the pooled amniotic fluids from the control eggs. Carry out amplification by 5 passages in leucosis-free chick-embryo cell cultures; carry out a test for avian leucosis using cells from the 5th passage. The control eggs comply with the test if no evidence of the presence of avian leucosis viruses is found.

Other extraneous agents. Inoculate 5 mL samples of the pooled amniotic fluids from the control eggs into human and simian cell cultures. Observe the cell cultures for 14 days. The control eggs comply with the test if no evidence of the presence of extraneous agents is found. The test is not valid unless 80 per cent of the inoculated cultures survive to the end of the observation period.

01/2010:20617
corrected 7.6

2.6.17. TEST FOR ANTICOMPLEMENTARY ACTIVITY OF IMMUNOGLOBULIN

For the measurement of anticomplementary activity (ACA) of immunoglobulin, a defined amount of test material (10 mg of immunoglobulin) is incubated with a defined amount of guinea-pig complement (20 CH_{50}) and the remaining complement is titrated; the anticomplementary activity is expressed as the percentage consumption of complement relative to the complement control considered as 100 per cent.

The haemolytic unit of complement activity (CH_{50}) is the amount of complement that, in the given reaction conditions, will produce the lysis of 2.5×10^8 out of a total of 5×10^8 optimally sensitised red blood cells.

Magnesium and calcium stock solution. Dissolve 1.103 g of *calcium chloride R* and 5.083 g of *magnesium chloride R* in *water R* and dilute to 25 mL with the same solvent.

Barbital buffer stock solution. Dissolve 207.5 g of *sodium chloride R* and 25.48 g of *barbital sodium R* in 4000 mL of *water R* and adjust to pH 7.3 using *1 M hydrochloric acid*. Add 12.5 mL of magnesium and calcium stock solution and dilute to 5000 mL with *water R*. Filter through a membrane filter (nominal pore size 0.22 µm). Store at 4 °C in glass containers.

Gelatin solution. Dissolve 12.5 g of *gelatin R* in about 800 mL of *water R* and heat to boiling in a water-bath. Cool to 20 °C and dilute to 10 L with *water R*. Filter through a membrane filter (nominal pore size 0.22 µm). Store at 4 °C. Use clear solutions only.

Citrate solution. Dissolve 8.0 g of *sodium citrate R*, 4.2 g of *sodium chloride R* and 20.5 g of *glucose R* in 750 mL of *water R*. Adjust to pH 6.1 using a 100 g/L solution of *citric acid R* and dilute to 1000 mL with *water R*.

Gelatin barbital buffer solution. Add 4 volumes of gelatin solution to 1 volume of barbital buffer stock solution and mix. Adjust to pH 7.3, if necessary, using *1 M sodium hydroxide* or *1 M hydrochloric acid*. Maintain at 4 °C. Prepare fresh solutions daily.

Stabilised sheep blood. Collect 1 volume of sheep blood into 1 volume of citrate solution and mix. Store at 4 °C for not less than 7 days and not more than 28 days. (Stabilised sheep blood and sheep red blood cells are available from a number of commercial sources.)

Haemolysin. Antiserum against sheep red blood cells prepared in rabbits. (Such antisera are available from a number of commercial sources.)

Guinea-pig complement. Prepare a pool of serum from the blood of not fewer than 10 guinea-pigs. Separate the serum from the clotted blood by centrifugation at about 4 °C. Store the serum in small amounts below – 70 °C.

METHOD

Preparation of standardised 5 per cent sheep red blood cell suspension. Separate sheep red blood cells by centrifuging an appropriate volume of stabilised sheep blood and wash the cells at least 3 times with gelatin barbital buffer solution and prepare a 5 per cent *V/V* suspension in the same solution. Measure the cell density of the suspension as follows: add 0.2 mL to 2.8 mL of *water R* and centrifuge the lysed solution for 5 min at 1000 *g*; the cell density is suitable if the absorbance (*2.2.25*) of the supernatant at 541 nm is 0.62 ± 0.01. Correct the cell density by adding gelatin barbital buffer solution according to the following equation:

$$V_f = \frac{V_i \times A}{0.62}$$

V_f = final adjusted volume;

V_i = the initial volume;

A = absorbance of the original suspension at 541 nm.

The adjusted suspension contains about 1×10^9 cells/mL.

Haemolysin titration. Prepare haemolysin dilutions as shown in Table 2.6.17.-1.

Table 2.6.17.-1

Required dilution of haemolysin	Prepared using		
	Gelatin barbital buffer solution		Haemolysin
	Volume (mL)	Dilution (1/...)	Volume (mL)
7.5	0.65	undiluted	0.1
10	0.90	undiluted	0.1
75	1.80	7.5	0.2
100	1.80	10	0.2
150	1.00	75	1.0
200	1.00	100	1.0
300	1.00	150	1.0
400	1.00	200	1.0
600	1.00	300	1.0
800	1.00	400	1.0
1200	1.00	600	1.0
1600	1.00	800	1.0
2400	1.00	1200	1.0
3200*	1.00	1600	1.0
4800*	1.00	2400	1.0

* discard 1.0 mL of the mixture.

Add 1.0 mL of 5 per cent sheep red blood cell suspension to each tube of the haemolysin dilution series, starting at the 1/75 dilution, and mix. Incubate at 37 °C for 30 min.

Transfer 0.2 mL of each of these incubated mixtures to new tubes and add 1.10 mL of gelatin barbital buffer solution and 0.2 mL of diluted guinea-pig complement (for example, 1/150). Perform this in duplicate.

As the unhaemolysed cell control, prepare 3 tubes with 1.4 mL of gelatin barbital buffer solution and 0.1 mL of 5 per cent sheep red blood cell suspension.

As the fully haemolysed control, prepare 3 tubes with 1.4 mL of *water R* and 0.1 mL of 5 per cent sheep red cell suspension.

Incubate all tubes at 37 °C for 60 min and centrifuge at 1000 *g* for 5 min. Measure the absorbance (*2.2.25*) of the supernatants at 541 nm and calculate the percentage degree of haemolysis in each tube using the following expression:

$$\frac{A_a - A_1}{A_b - A_1} \times 100$$

A_a = absorbance of tubes with haemolysin dilution;

A_b = mean absorbance of the 3 tubes with full haemolysis;

A_1 = mean absorbance of the 3 tubes with no haemolysis.

Plot the percentage degree of haemolysis as the ordinate against the corresponding reciprocal value of the haemolysin dilution as the abscissa on linear graph paper. Determine the optimal dilution of the haemolysin from the graph by inspection. Select a dilution such that further increase in the amount of haemolysin does not cause appreciable change in the degree of haemolysis. This dilution is defined as 1 minimal haemolytic unit (1 MHU) in 1.0 mL. The optimal haemolytic haemolysin dilution for preparation of sensitised sheep red blood cells contains 2 MHU/mL.

The haemolysin titration is not valid unless the maximum degree of haemolysis is 50 per cent to 70 per cent. If the maximum degree of haemolysis is not in this range, repeat the titration with more or less diluted complement solution.

Preparation of optimised sensitised sheep red blood cells (haemolytic system). Prepare an appropriate volume of diluted haemolysin containing 2 MHU/mL and an equal volume of standardised 5 per cent sheep red blood cell suspension. Add the haemolysin dilution to the standardised cell suspension and mix. Incubate at 37 °C for 15 min, store at 2 °C to 8 °C and use within 6 h.

Titration of complement. Prepare an appropriate dilution of complement (for example 1/250) with gelatin barbital buffer solution and perform the titration in duplicate as shown in Table 2.6.17.-2.

Table 2.6.17.-2

Tube number	Volume of diluted complement (for example 1/250) (mL)	Volume of gelatin barbital buffer solution (mL)
1	0.1	1.2
2	0.2	1.1
3	0.3	1.0
4	0.4	0.9
5	0.5	0.8
6	0.6	0.7
7	0.7	0.6
8	0.8	0.5
9	0.9	0.4
10	1.0	0.3
11	1.1	0.2
12	1.2	0.1
3 tubes as cell control at 0 per cent haemolysis	–	1.3
3 tubes at 100 per cent haemolysis	–	1.3 mL of water

Add 0.2 mL of sensitised sheep red blood cells to each tube, mix well and incubate at 37 °C for 60 min. Cool the tubes in an ice-bath and centrifuge at 1000 *g* for 5 min. Measure the absorbance of the supernatant at 541 nm and calculate the degree of haemolysis (*Y*) using the following expression:

$$\frac{A_c - A_1}{A_b - A_1}$$

A_c = absorbance of tubes 1 to 12;

A_b = mean absorbance of tubes with 100 per cent haemolysis;

A_1 = mean absorbance of cell controls with 0 per cent haemolysis.

Plot $Y/(1-Y)$ as the abscissa against the amount of diluted complement in millilitres as the ordinate on log–log graph paper. Fit the best line to the points and determine the ordinate for the 50 per cent haemolytic complement dose where $Y/(1-Y) = 1.0$. Calculate the activity in haemolytic units (CH_{50}/mL) using the following expression:

$$\frac{C_d}{C_a \times 5}$$

C_d = reciprocal value of the complement dilution;

C_a = volume of diluted complement resulting in 50 per cent haemolysis, in millilitres;

5 = scaling factor to take account of the number of red blood cells.

The test is not valid unless the plot is a straight line between 15 per cent and 85 per cent haemolysis and the slope is 0.15 to 0.40, and preferably 0.18 to 0.30.

Test for anticomplementary activity. Prepare a complement dilution having 100 CH_{50}/mL by diluting titrated guinea-pig complement with gelatin barbital buffer solution. Depending on the immunoglobulin to be examined and based on validation data, a pH adjustment to 7 may be necessary. Prepare incubation mixtures as follows for an immunoglobulin containing 50 mg/mL:

Table 2.6.17.-3

	Immunoglobulin to be examined	Complement control (in duplicate)
Immunoglobulin (50 mg/mL)	0.2 mL	–
Gelatin barbital buffer	0.6 mL	0.8 mL
Complement	0.2 mL	0.2 mL

Carry out the test on the immunoglobulin to be examined and prepare ACA negative and positive controls using *human immunoglobulin (ACA and molecular size) BRP*, as indicated in the leaflet accompanying the reference preparation. Higher or lower volumes of sample and of gelatin barbital buffer solution are added if the immunoglobulin concentration varies from 50 mg/mL; for example, 0.47 mL of gelatin barbital buffer solution is added to 0.33 mL of immunoglobulin containing 30 mg/mL to give 0.8 mL. Close the tubes and incubate at 37 °C for 60 min. Add 0.2 mL of each incubation mixture to 9.8 mL of gelatin barbital buffer solution to dilute the complement. Perform complement titrations on each tube as described above to determine the remaining complement activity (Table 2.6.17.-2). Calculate the anticomplementary

activity of the preparation to be examined relative to the complement control considered as 100 per cent, using the following expression:

$$\frac{a-b}{a} \times 100$$

a = mean complement activity (CH_{50}/mL) of complement control;

b = complement activity (CH_{50}/mL) of tested sample.

The test is not valid unless:

- the anticomplementary activities found for ACA negative control and ACA positive control are within the limits stated in the leaflet accompanying the reference preparation;
- the mean complement activity of complement control (a) is in the range 80 CH_{50}/mL to 120 CH_{50}/mL.

01/2008:20618

2.6.18. TEST FOR NEUROVIRULENCE OF LIVE VIRUS VACCINES

For each test, use not fewer than ten monkeys that are seronegative for the virus to be tested. For each monkey, inject not more than 0.5 mL of the material to be examined into the thalamic region of each hemisphere, unless otherwise prescribed. The total amount of virus inoculated in each monkey must be not less than the amount contained in the recommended single human dose of the vaccine. As a check against the introduction of wild neurovirulent virus, keep a group of not fewer than four control monkeys as cage-mates or in the immediate vicinity of the inoculated monkeys. Observe the inoculated monkeys for 17 to 21 days for symptoms of paralysis and other evidence of neurological involvement; observe the control monkeys for the same period plus 10 days. Animals that die within 48 h of injection are considered to have died from non-specific causes and may be replaced. The test is not valid if: more than 20 per cent of the inoculated monkeys die from nonspecific causes; serum samples taken from the control monkeys at the time of inoculation of the test animals and 10 days after the latter are euthanised show evidence of infection by wild virus of the type to be tested or by measles virus. At the end of the observation period, carry out autopsy and histopathological examinations of appropriate areas of the brain for evidence of central nervous system involvement. The material complies with the test if there is no unexpected clinical or histopathological evidence of involvement of the central nervous system attributable to the inoculated virus.

01/2008:20619

2.6.19. TEST FOR NEUROVIRULENCE OF POLIOMYELITIS VACCINE (ORAL)

Monkeys used in the neurovirulence test comply with the requirements given in the monograph on *Poliomyelitis vaccine oral (0215)* and weigh not less than 1.5 kg. The pathogenicity for *Macaca* or *Cercopithecus monkeys* is tested in comparison with that of a reference virus preparation for neurovirulence testing by inoculation into the lumbar region of the central nervous system after sedation with a suitable substance, for example, ketamine hydrochloride. A sample of serum taken before the injection shall be shown not to contain neutralising antibody at a dilution of 1:4 when tested against not more than 1000 $CCID_{50}$ of each of the three types of poliovirus.

Number of monkeys. The vaccine and the appropriate homotypic reference virus are tested concurrently in the same group of monkeys. Equal numbers of animals are inoculated with the vaccine to be examined and the reference preparation. The animals are allocated randomly to treatment groups and cages and their identity is coded so that the treatment received by each animal is concealed from the observers and the evaluators of the sections. The number of monkeys inoculated is such that in the evaluation of both the vaccine and the reference preparation not fewer than eleven positive monkeys are included for type 1 and type 2 virus and not fewer than eighteen positive monkeys for type 3 virus (positive monkeys are those that show specific neuronal lesions of poliovirus in the central nervous system). More than one batch of vaccine may be tested with the same homotypic reference. Monkeys from the same quarantine group are used wherever possible, otherwise monkeys from two groups are used and equal numbers from each group are treated with the vaccine and the reference preparation. If the test is carried out on two working days, an equal number of monkeys from each group are inoculated on each day with the vaccine and the homotypic reference preparation.

Virus content. The virus contents of the vaccine and the homotypic reference preparation are adjusted so as to be as near as possible equal and between $10^{5.5}$ and $10^{6.5}$ $CCID_{50}$/0.1 mL.

Observation. All monkeys are observed for 17 to 22 days for signs of poliomyelitis or other virus infection. Monkeys that survive the first 24 h but die before the 11th day after inoculation are autopsied to determine whether poliomyelitis was the cause of death. Animals that die from causes other than poliomyelitis are excluded from the evaluation. Animals that become moribund or are severely paralysed are euthanised and autopsied. All animals that survive until the end of the observation period are autopsied. The test is not valid if more than 20 per cent of the animals show intercurrent infection during the observation period.

Number of sections examined. The lumbar cord, the cervical cord, the lower and upper medulla oblongata, the midbrain, the thalamus and the motor cortex of each monkey, as a minimum, are subjected to histological examination. Sections are cut with a thickness of 15 µm and stained with gallocyanin. The minimum number of sections examined is as follows:

(a) 12 sections representative of the whole of the lumbar enlargement,

(b) 10 sections representative of the whole of the cervical enlargement,

(c) 2 sections from the medulla oblongata,

(d) 1 section from the pons and cerebellum,

(e) 1 section from the midbrain,

(f) 1 section from the left and the right of the thalamus,

(g) 1 section from the left and the right motor cerebral cortex.

Scoring of virus activity. For the evaluation of virus activity in the hemisections of the spinal cord and brain-stem, a score system for the severity of lesions is used, differentiating cellular infiltration and destruction of neurons as follows:

1. Cellular infiltration only (the monkey is not counted as positive),
2. Cellular infiltration with minimal neuronal damage,
3. Cellular infiltration with extensive neuronal damage,
4. Massive neuronal damage with or without cellular infiltration.

The scores are recorded on a standard form[(4)]. A monkey with neuronal lesions in the sections but that shows no needle tract is counted as positive. A monkey showing a needle tract in the sections, but no neuronal lesions is not regarded as positive. A section that shows damage from trauma but no specific virus lesions is not included in the score.

(4) A suitable form is shown in the Requirements for Poliomyelitis Vaccine (Oral) (Requirements for Biological Substances No. 7, World Health Organization).

Severity scores are based on hemisection readings of the lumbar (L), cervical (C) and brain (B) histological sections. The lesion score (LS) for each positive monkey is calculated as follows:

$$\mathrm{LS} = \frac{\begin{bmatrix}\text{Sum of}\\ \text{L score}\\ \text{Number of}\\ \text{hemisections}\end{bmatrix} + \begin{bmatrix}\text{Sum of}\\ \text{C score}\\ \text{Number of}\\ \text{hemisections}\end{bmatrix} + \begin{bmatrix}\text{Sum of}\\ \text{B score}\\ \text{Number of}\\ \text{hemisections}\end{bmatrix}}{3}$$

A mean lesion score is calculated for each group of positive monkeys.

Evaluation. The comparison of the virus activity in the vaccine and the reference preparation is based on the activity in the lumbar enlargement of the cord and the degree of spread of activity from this region to the cervical enlargement and the brain. Acceptance or rejection is based on the total score of all the test animals. Individual animals showing evidence of unusually high activity, either in the lumbar region or as the result of spread from this region, are also taken into consideration in the final evaluation. The monovalent bulk passes the test if the required number of animals is positive and if none of the clinical and histopathological examinations shows a significant difference in pathogenicity between the vaccine virus and the reference material. Criteria for acceptance are given below.

Criteria. A suitable number of neurovirulence qualifying tests (for example, four tests) is carried out on each reference vaccine (types 1, 2 and 3) to provide data on the activity of such vaccines that will serve as the basis of the criteria for vaccines to be tested. The overall mean lesion score (M) for the replicate tests on each reference virus is calculated together with the pooled estimate of the within-test variance (s^2) and the within-test deviation (s).

Validity criteria for the results of a test on a reference preparation are established on the basis of the cumulative data from the qualifying tests. No generally applicable criteria can be given; for laboratories with limited experience, the following empirical method for setting acceptable limits for the mean lesion score for the reference preparation (X_{ref}) may be helpful (see Table 2.6.19.-1):

Table 2.6.19.-1

	Lower limit	Upper limit
Types 1 and 2	$M - s$	$M + s$
Type 3	$M - s/2$	$M + s$

If the mean lesion score for the vaccine to be tested is X_{test} and C_1, C_2 and C_3 are constants determined as described below, then:

the vaccine is not acceptable if:

$$X_{\text{test}} - X_{\text{ref}} > C_1$$

the vaccine may be retested once if:

$$C_1 < X_{\text{test}} - X_{\text{ref}} < C_2$$

If the vaccine is retested, the means of the lesion scores for the vaccine to be tested and the reference vaccine are recalculated. The vaccine is not acceptable if:

$$\frac{X_{(\text{test 1}+\text{test 2})} - X_{(\text{ref 1}+\text{ref 2})}}{2} > C_3$$

The constants C_1, C_2 and C_3 are calculated from the expressions:

$$C_1 = 2.3\sqrt{\frac{2s^2}{N_1}}$$

$$C_2 = 2.6\sqrt{\frac{2s^2}{N_1}}$$

$$C_3 = 1.6\sqrt{\frac{2s^2}{N_1}}$$

N_1 = number of positive monkeys per vaccine test,

N_2 = number of positive monkeys in the two tests,

2.3 = normal deviate at the 1 per cent level,

2.6 = normal deviate at the 0.5 per cent level,

1.6 = normal deviate at the 5 per cent level.

A neurovirulence test in which the mean lesion score for the reference (X_{ref}) is not compatible with previous experience is not used for assessing a test vaccine. If the test is valid, the mean lesion score for the vaccine to be tested (X_{test}) is calculated and compared with that of the homotypic reference vaccine.

07/2011:20620

2.6.20. ANTI-A AND ANTI-B HAEMAGGLUTININS

METHOD A: INDIRECT METHOD

Prepare in duplicate serial dilutions of the preparation to be examined in a 9 g/L solution of *sodium chloride R*. To each dilution of 1 series add an equal volume of a 5 per cent *V/V* suspension of group A_1 red blood cells previously washed 3 times with the sodium chloride solution. To each dilution of the other series add an equal volume of a 5 per cent *V/V* suspension of group B red blood cells previously washed 3 times with the sodium chloride solution. Incubate the suspensions at 37 °C for 30 min then wash the cells 3 times with the sodium chloride solution. Leave the cells in contact with a polyvalent anti-human globulin reagent for 30 min. Without centrifuging, examine each suspension for agglutination under a microscope.

METHOD B: DIRECT METHOD

MATERIALS

Phosphate-buffered saline (PBS). Dissolve 8.0 g of *sodium chloride R*, 0.76 g of *anhydrous disodium hydrogen phosphate R*, 0.2 g of *potassium chloride R* and 0.2 g of *potassium dihydrogen phosphate R* in *water R* and dilute to 1000 mL with the same solvent. If the solution has to be kept for several days, 0.2 g of *sodium azide R* may be added in order to avoid microbial contamination.

PBS-BSA solution. PBS containing 2 g/L of *bovine albumin R* (Cohn Fraction V, for ELISA). Store the solution at 2-8 °C but allow it to reach 19-25°C before use.

Papain solution. Use serological-grade papain from a commercial source, the activity of which has been validated.

Red blood cells. Use pooled D-negative A_1 (A_1rr), D-negative B (Brr) and D-negative O (Orr) red blood cells from preferably 3 donors. When *Immunoglobulin for anti-A and anti-B antibodies limit test BRP* is used, 3 donors are to be used. A_2 red blood cells are not recommended as they give weaker reactions.

Wash the cells 4 times with PBS or until the supernatant is clear. Each wash consists of suspending the cells in a minimum of 2 volumes of PBS, centrifuging the cells at 1800 *g* for 5 min

to pack, and discarding the supernatant. Treat the packed cells with papain solution according to the manufacturer's instructions and wash the cells 4 times with PBS.

Red blood cells may be stored for not more than 1 week in a preservative solution at 2-8 °C. A preparation of the following composition is appropriate:

Trisodium citrate	8 g/L
D-glucose	20 g/L
Citric acid	0.5 g/L
Sodium chloride	4.2 g/L
Inosine	0.938 g/L
Adenosine triphosphate (ATP)	0.4 g/L
Chloramphenicol	0.34 g/L
Neomycin sulfate	0.1 g/L

If using stored cells, wash the cells at least twice in PBS or until the supernatant is clear before proceeding.

Microtitre plates. Use V-bottomed rigid microtitre plates.

Reference standards. Immunoglobulin (anti-A, anti-B antibodies test positive control) BRP and *Immunoglobulin (anti-A, anti-B antibodies test negative control) BRP* are suitable for use as the positive control and negative control, respectively, and should be used as guides for operators establishing and performing the direct method for anti-A and anti-B haemagglutinins.

Immunoglobulin for anti-A and anti-B antibodies limit test BRP defines the recommended maximum limits permissible for batches of human immunoglobulin and must be used only for comparison with batches of human immunoglobulin that have higher titres than the positive control.

METHOD

The test described in this chapter is performed at room temperature on the positive control solutions, the negative control solutions and the test solutions at the same time and under identical conditions. Whenever necessary, a further test is performed with *Immunoglobulin for anti-A and anti-B antibodies limit test BRP*.

Reference solutions. Reconstitute the positive control and the negative control according to the instructions. The immunoglobulin G (IgG) concentration is 50 g/L in each of the reconstituted preparations. Make a 2-fold dilution of each reconstituted preparation with PBS-BSA solution to obtain solutions containing IgG at 25 g/L. Prepare 7 further serial 2-fold dilutions of each preparation using PBS-BSA solution to extend the dilution range to 1/256 (0.195 g/L IgG). Add 20 µL of each dilution of each preparation in triplicate to the microtitre plate.

Test solutions. Dilute the preparation to be examined with PBS-BSA solution to obtain a starting IgG concentration of 25 g/L. For 50 g/L preparations, this is a 2-fold dilution; adjust the dilution factor accordingly for preparations with an IgG concentration other than 50 g/L to obtain a starting concentration of 25 g/L for testing. This 25 g/L solution is assigned a nominal 2-fold dilution factor for comparison with the reference solutions, even if this does not reflect the true dilution factor used to achieve 25 g/L. Prepare 7 further serial 2-fold dilutions of the preparation using PBS-BSA solution to extend the nominal dilution range to 1/256 (0.195 g/L IgG) for comparison with the reference preparations over the same IgG concentration range. Add 20 µL of each dilution in triplicate to the microtitre plate.

Prepare 3 per cent *V/V* suspensions of papain-treated D-negative A_1, B and O red blood cells in PBS/BSA solution. Add 20 µL of D-negative A_1, B and O red blood cells respectively to the 1st, the 2nd and the 3rd dilution series of each of the preparation to be examined, the positive control and the negative control. Mix by shaking the plate on a shaker for 10 s (or until the cells are resuspended).

Centrifuge the plate at 80 *g* at room temperature for 1 min to pack the cells. Place the plate at an angle of approximately 70°. Read after 4-5 min or when the negative controls (D-negative O red blood cells and negative control solution) have streamed. A cell button at the bottom of the well indicates a positive result. A stream of cells represents a negative result.

Record the endpoint titre as the reciprocal of the highest dilution that gives rise to a positive result.

The positive control has nominal anti-A and anti-B titres of 32 (range 32-64 for anti-A; range 16-32 for anti-B) and the negative controls (D-negative O red blood cells and negative control solution) must not show agglutination at the starting dilution of 1 in 2. Users must validate their own test conditions, and investigate their assay conditions and reagents in the event of results being significantly different from those expected. Failure to obtain negative reactions with the negative controls may indicate that, for example, insufficient time has elapsed for the cells to stream, or that reagents have been used directly from cold storage.

If the anti-A or anti-B titre of the preparation to be examined is greater than the titre of the positive control when both preparations are titrated from 25 g/L, the test preparation is to be compared with *Immunoglobulin for anti-A and anti-B antibodies limit test BRP*.

The maximum allowable titre is 64 when the preparations are titrated from 25 g/L.

07/2010:20621

2.6.21. NUCLEIC ACID AMPLIFICATION TECHNIQUES

1. INTRODUCTION

Nucleic acid amplification techniques are based on 2 different approaches:

1. amplification of a target nucleic acid sequence using, for example, polymerase chain reaction (PCR), ligase chain reaction (LCR), or isothermal ribonucleic acid (RNA) amplification;
2. amplification of a hybridisation signal using, for example, for deoxyribonucleic acid (DNA), the branched DNA (bDNA) method; in this case signal amplification is achieved without subjecting the nucleic acid to repetitive cycles of amplification.

In this general chapter, the PCR method is described as the reference technique. Alternative methods may be used, if they comply with the quality requirements described below.

2. SCOPE

This section establishes the requirements for sample preparation, *in vitro* amplification of DNA sequences and detection of the specific PCR product. With the aid of PCR, defined DNA sequences can be detected. RNA sequences can also be detected following reverse transcription of the RNA to complementary DNA (cDNA) and subsequent amplification.

3. PRINCIPLE OF THE METHOD

PCR is a procedure that allows specific *in vitro* amplification of segments of DNA or of RNA after reverse transcription into cDNA.

Following denaturation of double-stranded DNA into single-stranded DNA, 2 synthetic oligonucleotide primers of opposite polarity anneal to their respective complementary sequences in the DNA to be amplified. The short double-stranded regions that form as a result of specific base pairing between the primers and the complementary DNA

sequence border the DNA segment to be amplified, and serve as starting positions for *in vitro* DNA synthesis by means of a heat-stable DNA polymerase.

Amplification of the DNA occurs in cycles consisting of:

- heat denaturation of the nucleic acid (target sequence) into 2 single strands;
- specific annealing of the primers to the target sequence under suitable reaction conditions;
- extension of the primers, which are bound to both single strands, by DNA polymerase at a suitable temperature (DNA synthesis).

Repeated cycles of heat denaturation, primer annealing and DNA synthesis results in an exponential amplification of the DNA segment limited by the primers.

The specific PCR product known as an amplicon can be detected by a variety of methods of appropriate specificity and sensitivity.

Multiplex PCR assays use several primer pairs designed for simultaneous amplification of different targets in one reaction.

4. TEST MATERIAL

Because of the high sensitivity of PCR, the samples must be protected against external contamination with target sequences. Sampling, storage and transport of the test material are performed under conditions that minimise degradation of the target sequence. In the case of RNA target sequences, special precautions are necessary since RNA is highly sensitive to degradation by ribonucleases. Care must be taken since some added reagents, such as anticoagulants or preservatives, may interfere with the test procedure.

5. TEST METHOD

5.1. Prevention of contamination

The risk of contamination requires a strict segregation of the areas depending on the material handled and the technology used. Points to consider include movement of personnel, gowning, material flow and air supply and decontamination procedures.

The system should be sub-divided into compartments such as:

- master-mix area (area where exclusively template-free material is handled, e.g. primers, buffers, etc.);
- pre-PCR (area where reagents, samples and controls are handled);
- PCR amplification (amplified material is handled in a closed system);
- post-PCR detection (the only area where the amplified material is handled in an open system).

5.2. Sample preparation

When preparing samples, the target sequence to be amplified needs to be efficiently extracted or liberated from the test material in a reproducible manner and in such a way that amplification under the selected reaction conditions is possible. A variety of physico-chemical extraction procedures and/or enrichment procedures may be employed.

Additives present in test material may interfere with PCR. The procedures described under 7.3.2. must be used as a control for the presence of inhibitors originating from the test material.

In the case of RNA-templates, care must be taken to avoid ribonuclease activity.

5.3. Amplification

PCR amplification of the target sequence is conducted under defined cycling conditions (temperature profile for denaturation of double-stranded DNA, annealing and extension of primers; incubation times at selected temperatures; ramp rates). These depend on various parameters such as:

- the length and base composition of primer and target sequences;
- the type of DNA polymerase, buffer composition and reaction volume used for the amplification;
- the type of thermocycler used and the thermal conductivity rate between the apparatus, reaction tube and reaction fluid.

5.4. Detection

The amplicon generated by PCR may be identified by size, sequence, chemical modification or a combination of these parameters. Detection and characterisation by size may be achieved by gel electrophoresis (using agarose or polyacrylamide slab gels or capillary electrophoresis) or column chromatography (for example, liquid chromatography). Detection and characterisation by sequence composition may be achieved by the specific hybridisation of probes having a sequence complementary to the target sequence or by cleavage of the amplified material reflecting target-specific restriction-enzyme sites. Detection and characterisation by chemical modification may be achieved by, for example, incorporation of a fluorophore into the amplicons and subsequent detection of fluorescence following excitation.

Detection of amplicons may also be achieved by using probes labelled to permit a subsequent radioisotopic or immuno-enzyme-coupled detection.

6. EVALUATION AND INTERPRETATION OF RESULTS

A valid result is obtained within a test only if the positive control(s) is unambiguously positive and the negative control(s) is unambiguously negative. Due to the very high sensitivity of the PCR method and the inherent risk of contamination, it is necessary to confirm positive results by repeating the complete test procedure in duplicate, where possible on a new aliquot of the sample. The sample is considered positive if at least one of the repeat tests gives a positive result. As soon as a measurable target threshold is defined, a quantitative test system is required.

7. QUALITY ASSURANCE

7.1. Validation of the PCR assay system

The validation programme must include validation of instrumentation and the PCR method employed. Reference should be made to the *ICH guidelines* (topic Q2B) Validation of Analytical Method: Methodology.

Appropriate official working reference preparations or in-house reference preparations calibrated against International Standards for the target sequences for which the test system will be used are indispensable for validation of a PCR test.

7.1.1. Determination of the positive cut-off point

During validation of qualitative tests, the positive cut-off point must be determined. The positive cut-off point is defined as the minimum number of target sequences per volume sample that can be detected in 95 per cent of test runs. The positive cut-off point depends on interrelated factors such as the volume of the sample extracted and the efficacy of the extraction methodology, the transcription of the target RNA into cDNA, the amplification process and the detection.

To define the detection limit of the assay system, reference must be made to the positive cut-off point for each target sequence and the test performance above and below the positive cut-off point.

7.1.2. Quantitative assay systems

For a quantitative assay, the following parameters are determined during validation: accuracy, precision, specificity, quantitation limit, linearity, range and robustness.

7.2. Quality control of reagents

All reagents crucial for the methodology used have to be controlled prior to use in routine applications. Their acceptance/withdrawal is based on pre-defined quality criteria.

Primers are a crucial component of the PCR assay and as such their design, their purity and the validation of their use in a PCR assay require careful attention. Primers may be

modified (for example, by conjugation with a fluorophore or antigen) in order to permit a specific method of detection of the amplicon, provided such modifications do not inhibit accurate and efficient amplification of the target sequence.

7.3. Run controls

7.3.1. External controls

In order to minimise the risk of contamination and to ensure adequate sensitivity, the following external controls are included in each PCR assay:

- positive control: this contains a defined number of target-sequence copies, the number being close to the positive cut-off value, and determined individually for each assay system and indicated as a multiple of the positive cut-off value of the assay system;
- negative control: a sample of a suitable matrix already proven to be free of the target sequences.

7.3.2. Internal control

Internal controls are defined nucleic acid sequences containing, unless otherwise prescribed, the primer binding sites. Internal controls must be amplified with defined efficacy, and the amplicons must be clearly discernible. Internal controls must be of the same type of nucleic acid (DNA/RNA) as the material to be tested. The internal control is preferably added to the test material before isolating the nucleic acid and therefore acts as an overall control (extraction, reverse transcription, amplification, detection).

7.3.3. Threshold control

The threshold control for quantitative assays is a test sample with the analyte at a concentration that is defined as the threshold not to be exceeded. It contains the analyte suitably calibrated in International Units and is analysed in parallel in each run of a quantitative assay.

7.4. External quality assessment

Participation in external quality assessment programmes is an important PCR quality assurance procedure for each laboratory and each operator.

The following sections are published for information.

Validation of nucleic acid amplification techniques (NAT) for the detection of hepatitis C virus (HCV) RNA in plasma pools: guidelines

1. SCOPE

The majority of nucleic acid amplification analytical procedures are qualitative (quantal) tests for the presence of nucleic acid with some quantitative tests (either in-house or commercial) being available. For the detection of HCV RNA contamination of plasma pools, qualitative tests are adequate and may be considered to be a limit test for the control of impurities as described in the *Pharmeuropa* Technical Guide for the elaboration of monographs, December 1999, Chapter III 'Validation of analytical procedures'. These guidelines describe methods to validate only qualitative nucleic acid amplification analytical procedures for assessing HCV RNA contamination of plasma pools. Therefore, the 2 characteristics regarded as the most important for validation of the analytical procedure are the specificity and the detection limit. In addition, the robustness of the analytical procedure should be evaluated.

However, this document may also be used as a basis for the validation of nucleic acid amplification in general.

For the purpose of this document, an analytical procedure is defined as the complete procedure from extraction of nucleic acid to detection of the amplified products.

Where commercial kits are used for part or all of the analytical procedure, documented validation points already covered by the kit manufacturer can substitute for the validation by the user. Nevertheless, the performance of the kit with respect to its intended use has to be demonstrated by the user (e.g. detection limit, robustness, cross-contamination).

2. SPECIFICITY

Specificity is the ability to assess unequivocally nucleic acid in the presence of components that may be expected to be present.

The specificity of nucleic acid amplification analytical procedures is dependent on the choice of primers, the choice of probe (for analysis of the final product) and the stringency of the test conditions (for both the amplification and the detection steps).

When designing primers and probes, the specificity of the primers and probes to detect only HCV RNA should be investigated by comparing the chosen sequences with sequences in published data banks. For HCV, primers (and probes) will normally be chosen from areas of the 5' non-coding region of the HCV genome which are highly conserved for all genotypes.

The amplified product should be unequivocally identified by using one of a number of methods such as amplification with nested primers, restriction enzyme analysis, sequencing, or hybridisation with a specific probe.

In order to validate the specificity of the analytical procedure, at least 100 HCV RNA-negative plasma pools should be tested and shown to be non-reactive. Suitable samples of non-reactive pools are available from the European Directorate for the Quality of Medicines & HealthCare (EDQM).

The ability of the analytical procedure to detect all HCV genotypes will again depend on the choice of primers, probes and method parameters. This ability should be demonstrated using characterised reference panels. However, in view of the difficulty in obtaining samples of some genotypes (e.g. genotype 6), the most prevalent genotypes (e.g. genotypes 1 and 3 in Europe) should be detected at a suitable level.

3. DETECTION LIMIT

The detection limit of an individual analytical procedure is the lowest amount of nucleic acid in a sample that can be detected but not necessarily quantitated as an exact value.

The nucleic acid amplification analytical procedure used for the detection of HCV RNA in plasma pools usually yields qualitative results. The number of possible results is limited to 2: either positive or negative. Although the determination of the detection limit is recommended, for practical purposes, a positive cut-off point should be determined for the nucleic acid amplification analytical procedure. The positive cut-off point (as defined in the general chapter *2.6.21*) is the minimum number of target sequences per volume sample that can be detected in 95 per cent of test runs. This positive cut-off point is influenced by the distribution of viral genomes in the individual samples being tested and by factors such as enzyme efficiency, and can result in different 95 per cent cut-off values for individual analytical test runs.

In order to determine the positive cut-off point, a dilution series of a working reagent or of the *hepatitis C virus BRP*, which has been calibrated against the WHO HCV International Standard 96/790, should be tested on different days to examine variation between test runs. At least 3 independent dilution series should be tested with a sufficient number of replicates at each dilution to give a total number of 24 test results for each dilution, to enable a statistical analysis of the results.

For example, a laboratory could test 3 dilution series on different days with 8 replicates for each dilution, 4 dilution series on different days with 6 replicates for each dilution, or 6 dilution series on different days with 4 replicates for each dilution. In order to keep the number of dilutions at a manageable level, a preliminary test (using, for example, $\log_{10}$ dilutions of the plasma pool sample) should be carried out in order to obtain a preliminary value for the positive

cut-off point (i.e. the highest dilution giving a positive signal). The range of dilutions can then be chosen around the predetermined preliminary cut-off point (using, for example, a dilution factor of 0.5 $\log_{10}$ or less and a negative plasma pool for the dilution matrix). The concentration of HCV RNA that can be detected in 95 per cent of test runs can then be calculated using an appropriate statistical evaluation.

These results may also serve to demonstrate the intra-assay variation and the day-to-day variation of the analytical procedure.

4. ROBUSTNESS

The robustness of an analytical procedure is a measure of its capacity to remain unaffected by small but deliberate variations in method parameters and provides an indication of its reliability during normal usage.

The evaluation of robustness should be considered during the development phase. It should show the reliability of the analytical procedure with respect to deliberate variations in method parameters. For NAT, small variations in the method parameters can be crucial. However, the robustness of the method can be demonstrated during its development when small variations in the concentrations of reagents (e.g. $MgCl_2$, primers or dNTP) are tested. To demonstrate robustness, at least 20 HCV RNA negative plasma pools (selected at random) spiked with HCV RNA to a final concentration of 3 times the previously determined 95 per cent cut-off value should be tested and found positive.

Problems with robustness may also arise with methods that use an initial ultracentrifugation step prior to extraction of the viral RNA. Therefore, to test the robustness of such methods, at least 20 plasma pools containing varying levels of HCV RNA, but lacking HCV-specific antibodies, should be tested and found positive.

Cross-contamination prevention should be demonstrated by the accurate detection of a panel of at least 20 samples consisting of alternate samples of negative plasma pools and negative plasma pools spiked with high concentrations of HCV (at least 10^2 times the 95 per cent cut-off value or at least 10^4 IU/mL).

5. QUALITY ASSURANCE

For biological tests such as NAT, specific problems may arise that influence both the validation and the interpretation of results. The test procedures must be described precisely in the form of standard operating procedures (SOPs). These should cover:

- the mode of sampling (type of container, etc.);
- the preparation of mini-pools (where appropriate);
- the conditions of storage before analysis;
- the exact description of the test conditions, including precautions taken to prevent cross-contamination or destruction of the viral RNA, reagents and reference preparations used;
- the exact description of the apparatus used;
- the detailed formulae for calculation of results, including statistical evaluation.

The use of a suitable run control (for example, an appropriate dilution of *hepatitis C virus BRP* or plasma spiked with an HCV sample calibrated against the WHO HCV International Standard 96/790) can be considered a satisfactory system-suitability check and ensures that the reliability of the analytical procedure is maintained whenever used.

Technical qualification. An appropriate installation and operation qualification programme should be implemented for each critical piece of the equipment used. For confirmation of analytical procedure performance after a change of critical equipment (e.g. thermocyclers), the change should be documented by conducting a parallel test on 8 samples of a plasma pool that is spiked with HCV RNA to a final concentration of 3 times the previously determined 95 per cent cut-off value. All results should be positive.

Operator qualification. An appropriate qualification programme should be implemented for each operator involved in the testing. To confirm successful training each operator should test at least 8 replicate samples of a plasma pool spiked with HCV RNA to a final concentration of 3 times the previously determined 95 per cent cut-off value. This test (8 replicate samples) should be repeated twice on 2 separate days, i.e. a total of 24 tests performed on 3 different days. All results should be positive.

Validation of nucleic acid amplification techniques (NAT) for the quantification of B19 virus (B19V) DNA in plasma pools: guidelines

1. SCOPE

The European Pharmacopoeia requires that plasma pools used for manufacture of certain products are tested for the presence of B19 virus (B19V) DNA with a threshold concentration that must not be exceeded. In order to comply with these requirements, quantitative NAT tests are preferred. The characteristics regarded as the most important for validation of the quantitative NAT procedure are accuracy, precision, specificity, quantitation limit, linearity and range. In addition, the robustness of the analytical procedure should be evaluated.

This guideline describes methods to validate NAT analytical procedures for assessing B19V DNA contamination of plasma pools based on the ICH guidelines. However, this document may also be used as a basis for the validation of quantitative NAT in general.

For the purpose of this document, an analytical procedure is defined as the complete procedure from extraction of nucleic acid to detection of the amplified products.

Where commercial kits are used for part or all of the analytical procedure, documented validation points already covered by the kit manufacturer can substitute for the validation by the user. Nevertheless, the performance of the kit with respect to its intended use has to be demonstrated by the user (e.g. precision, accuracy, range, robustness).

2. ACCURACY

Accuracy expresses the closeness of agreement between the value that is accepted as either a conventional true value or an accepted reference value and the value found. The accuracy of an assay is dependent on the calibration of the assay and on the variance of the different assay steps. Though it is recommended to establish the accuracy across the specified range of the analytical procedure, the most important assessment of accuracy is in the range of the threshold concentration. In the case of B19V NAT assays for investigation of plasma pools it is recommended to assess the accuracy of the calibrated assay by assaying at least 5 concentrations (dilution factor of 0.5 $\log_{10}$) of *B19 virus DNA for NAT testing BRP* or another material, suitably calibrated in International Units against the actual WHO B19 DNA International Standard, covering the range of the currently recommended threshold concentration of 10.0 IU/µL B19V DNA (e.g. 10^5 IU/mL, $10^{4.5}$ IU/mL, 10^4 IU/mL, $10^{3.5}$ IU/mL and 10^3 IU/mL), with at least 3 replicates for each dilution. Accuracy should be reported for the different concentrations in terms of percentage determined compared with the known amount of B19V DNA. It should reflect the level of technology of the respective assays, which should also be defined, for example in collaborative studies.

3. PRECISION

Precision expresses the closeness of agreement between a series of measurements, obtained from multiple sampling of the same homogenous sample. The precision is defined at 3 levels:

- repeatability expresses the precision under the same operating conditions over a short interval of time (intra-assay precision); it is assessed by using 1 assay and testing 3 replicates of appropriate dilutions of a B19V DNA-positive sample suitably calibrated in International Units and covering the whole quantitative range of the assay; the coefficient of variation for the individual samples is calculated (intra-assay variability);
- intermediate precision expresses the intra-laboratory variations (inter-assay precision); it is established by assaying replicates (as routinely used for the assay) of appropriate dilutions of a B19V DNA-positive sample suitably calibrated in International Units covering the whole quantitative range of the assay under different circumstances (e.g. different days, different analysts, different equipment, different reagents); the coefficient of variation for the individual samples is calculated;
- reproducibility expresses the precision between different laboratories (inter-laboratory precision); it is assessed by participation in quantitative collaborative studies on B19V DNA-NAT assays, e.g. under the Proficiency Testing Scheme (PTS), including the comparative analysis of the obtained quantitative results, where appropriate.

4. SPECIFICITY

Specificity expresses the ability to assess unequivocally nucleic acid in the presence of components that may be expected to be present. The specificity of NAT analytical procedures is dependent on the choice of primers, the choice of probe (for analysis of the final product) and the stringency of the test conditions (for both the amplification and the detection steps).

When designing primers and probes, the specificity of the primers and probes to detect only human B19V DNA should be investigated by comparing the chosen sequences with sequences in published data banks. There should be no major homology found with sequences unrelated to B19V.

The amplified product should be unequivocally identified by using one of a number of methods such as amplification with nested primers, restriction enzyme analysis, sequencing, or hybridisation with a specific probe.

In order to examine the specificity of the analytical procedure, at least 20 B19V DNA-negative plasma pools should be tested and shown to be non-reactive.

Parvovirus B19 genotypes. The International Committee on Taxonomy of Viruses (ICTV) has classified representatives of the 3 genotypes as strains of human parvovirus B19. Genotype 1 represents prototype B19V, genotype 2 represents viral sequences like A6, and genotype 3 represents V9-like sequences. By performing sequence alignment with respective B19V genotype sequences available from nucleic acid sequence databases, primers and probes should be designed to detect and quantify consistently the different human parvovirus B19 genotypes. Reference materials should be used to check the approach chosen. Since biological reference preparations reflecting some genotypes might be difficult to obtain, respective plasmid preparations or synthetic nucleic acids may also serve as a characterised target sequence source. However, those cannot be used to validate the extraction procedure.

5. QUANTITATION LIMIT

The quantitation limit is the lowest amount of nucleic acid in a sample that can be determined quantitatively with suitable precision and accuracy. The quantitation limit of the B19V NAT assay is assessed during the repeatability and intermediate-precision studies by limiting dilution analysis. The lowest concentration of target nucleic acids that is quantitated with suitable precision and accuracy is defined.

6. LINEARITY

The linearity of an assay is its ability to obtain test results that are directly proportional to the concentration of the nucleic acid. The linearity of the B19V NAT assay is assessed during the repeatability and intermediate-precision studies by testing replicates of diluted samples with the concentrations covering the whole quantitative range. The interval between the upper and the lower concentration of the target nucleic acid where test results are directly proportional to the concentrations is defined.

7. RANGE

The range of an assay is the interval between the upper and the lower concentration of nucleic acid in the sample for which it has been demonstrated that the procedure has a suitable level of precision, accuracy and linearity. The range of the B19V NAT assay is assessed during the repeatability and intermediate-precision studies by testing replicates of diluted samples. The interval between the upper and the lower concentration that can be expressed with an acceptable degree of accuracy and precision is defined.

8. ROBUSTNESS

The robustness of an analytical procedure is a measure of its capacity to remain unaffected by small but deliberate variations in method parameters and provides an indication of its reliability during normal usage. The evaluation of robustness should be considered during the development phase. It should show the reliability of the analytical procedure with respect to deliberate variations in method parameters. For NAT, small variations in the method parameters can be crucial. Nonetheless, the robustness of NAT can be demonstrated during the development of the method when small variations in the concentrations of reagents, for example $MgCl_2$, primers or dNTP, are tested. To demonstrate robustness, at least 20 B19V DNA-negative plasma pool samples spiked with B19V DNA at the threshold concentration should be tested and found to have acceptable quantitative values.

Cross-contamination prevention should be demonstrated by the accurate detection of a panel of at least 20 samples consisting of alternate samples of plasma pools without B19V DNA or with levels below the threshold concentration (10 samples) and plasma pools spiked with high concentrations of B19V DNA (at least 10^2 times the threshold level, 10 samples).

9. QUALITY ASSURANCE

For biological tests such as NAT, specific problems may arise that may influence both the validation and the interpretation of results. The test procedures must be described precisely in the form of standard operating procedures (SOPs). These should cover:

- the mode of sampling (type of container, etc.);
- the preparation of mini-pools by manufacturers (where appropriate);
- the conditions of storage before analysis;
- the exact description of the test conditions including precautions taken to prevent cross-contamination or destruction of the viral nucleic acids, reagents and reference preparations used;
- the exact description of the apparatus used;
- the detailed formulae for calculation of results, including statistical evaluation.

The inclusion of an appropriate threshold control (for example, plasma spiked with a B19V DNA sample suitably calibrated in International Units, such as *B19 virus DNA*

for NAT testing BRP) is considered to be a satisfactory system-suitability check and ensures that the reliability of the analytical procedure is maintained whenever used.

Technical qualification. An appropriate installation and operation qualification programme should be implemented for each critical piece of the equipment used. For confirmation of analytical procedure performance after a change of critical equipment (e.g. thermocyclers), the change should be documented by conducting a parallel test on 8 samples of a plasma pool that is spiked with a concentration of B19V DNA around the threshold concentration. All results should be acceptable and reflect the features of the assay as determined during the validation phase.

Operator qualification. An appropriate qualification programme should be implemented for each operator involved in the testing. To confirm successful training, each operator should test, on 3 separate days, at least 8 replicate samples of a plasma pool that is spiked with a concentration of B19V DNA around the threshold concentration (i.e. a total of 24 samples). All results should be acceptable and reflect the features of the assay as determined during the validation phase.

01/2008:20622

2.6.22. ACTIVATED COAGULATION FACTORS

Where applicable, determine the amount of heparin present (*2.7.12*) and neutralise the heparin, for example by addition of *protamine sulfate R* (10 µg of protamine sulfate neutralises 1 IU of heparin). Prepare 1 to 10 and 1 to 100 dilutions of the preparation to be examined using *tris(hydroxymethyl)aminomethane buffer solution pH 7.5 R*. Place a series of polystyrene tubes in a water-bath at 37 °C and add to each tube 0.1 mL of *platelet-poor plasma R* and 0.1 mL of a suitable dilution of a phospholipid preparation to act as a platelet substitute. Allow to stand for 60 s. Add to each tube either 0.1 mL of 1 of the dilutions or 0.1 mL of the buffer solution (control tube). To each tube add immediately 0.1 mL of a 3.7 g/L solution of *calcium chloride R* previously heated to 37 °C, and measure, within 30 min of preparing the original dilution, the time that elapses between addition of the calcium chloride solution and the formation of a clot. The test is not valid unless the coagulation time measured for the control tube is 200 s to 350 s.

07/2009:20624

2.6.24. AVIAN VIRAL VACCINES: TESTS FOR EXTRANEOUS AGENTS IN SEED LOTS

GENERAL PROVISIONS

a) In the following tests, chickens and/or chicken material such as eggs and cell cultures shall be derived from chicken flocks free from specified pathogens (SPF) (*5.2.2*).

b) Cell cultures for the testing of extraneous agents comply with the requirements for the master cell seed of chapter *5.2.4. Cell cultures for the production of veterinary vaccines*, with the exception of the karyotype test and the tumorigenicity test, which do not have to be carried out.

c) In tests using cell cultures, precise specifications are given for the number of replicates, monolayer surface areas and minimum survival rate of the cultures. Alternative numbers of replicates and cell surface areas are possible as well, provided that a minimum of 2 replicates are used, the total surface area and the total volume of test substance applied are not less than that prescribed here and the survival rate requirements are adapted accordingly.

d) For a freeze-dried preparation, reconstitute using a suitable liquid. Unless otherwise stated or justified, the test substance must contain a quantity of virus equivalent to at least 10 doses of vaccine in 0.1 mL of inoculum.

e) If the virus of the seed lot would interfere with the conduct and sensitivity of the test, neutralise the virus in the preparation with a monospecific antiserum.

f) Monospecific antiserum and serum of avian origin used for cell culture or any other purpose, in any of these tests, shall be free from antibodies against and free from inhibitory effects on the organisms listed hereafter under 7. Antibody specifications for sera used in extraneous agents testing.

g) Where specified in a monograph or otherwise justified, if neutralisation of the virus of the seed lot is required but difficult to achieve, the *in vitro* tests described below are adapted, as required, to provide the necessary guarantees of freedom from contamination with an extraneous agent.

h) Other types of tests than those indicated may be used provided they are at least as sensitive as those indicated and of appropriate specificity. Nucleic acid amplification techniques (*2.6.21*) give specific detection for many agents and can be used after validation for sensitivity and specificity.

1. TEST FOR EXTRANEOUS AGENTS USING EMBRYONATED HENS' EGGS

Use a test substance, diluted if necessary, containing a quantity of neutralised virus equivalent to at least 10 doses of vaccine in 0.2 mL of inoculum. Suitable antibiotics may be added. Inoculate the test substance into 3 groups of 10 embryonated hens' eggs as follows:

- group 1: 0.2 mL into the allantoic cavity of each 9- to 11-day-old embryonated egg;
- group 2: 0.2 mL onto the chorio-allantoic membrane of each 9- to 11-day-old embryonated egg;
- group 3: 0.2 mL into the yolk sac of each 5- to 6-day-old embryonated egg.

Candle the eggs in groups 1 and 2 daily for 7 days and the eggs in group 3 daily for 12 days. Discard embryos that die during the first 24 h as non-specific deaths; the test is not valid unless at least 6 embryos in each group survive beyond the first 24 h after inoculation. Examine macroscopically for abnormalities all embryos that die more than 24 h after inoculation, or that survive the incubation period. Examine also the chorio-allantoic membranes of these eggs for any abnormality and test the allantoic fluids for the presence of haemagglutinating agents.

Carry out a further embryo passage. Pool separately material from live and from the dead and abnormal embryos. Inoculate each pool into 10 eggs for each route as described above, chorio-allantoic membrane material being inoculated onto chorio-allantoic membranes, allantoic fluids into the allantoic cavity and embryo material into the yolk sac. For eggs inoculated by the allantoic and chorio-allantoic routes, candle the eggs daily for 7 days, proceeding and examining the material as described above. For eggs inoculated by the yolk sac route, candle the eggs daily for 12 days, proceeding and examining the material as described above.

The seed lot complies with the test if no test embryo shows macroscopic abnormalities or dies from causes attributable to the seed lot and if examination of the chorio-allantoic membranes and testing of the allantoic fluids show no evidence of the presence of any extraneous agent.

2. TEST IN CHICKEN KIDNEY CELLS

Prepare 7 monolayers of chicken kidney cells, each monolayer having an area of about 25 cm^2. Maintain 2 monolayers as negative controls and treat these in the same way as the 5 monolayers inoculated with the test substance, as described below. Remove the culture medium when the cells reach confluence. Inoculate 0.1 mL of the test substance onto each of the 5 monolayers. Allow adsorption for 1 h, add culture

medium and incubate the cultures for a total of at least 21 days, subculturing at 4- to 7-day intervals. Each passage is made with pooled cells and fluids from all 5 monolayers after carrying out a freeze-thaw cycle. Inoculate 0.1 mL of pooled material onto each of 5 recently prepared monolayers of about 25 cm^2 each, at each passage. For the last passage, grow the cells also on a suitable substrate so as to obtain an area of about 10 cm^2 of cells from each of the monolayers for test A. The test is not valid if less than 80 per cent of the monolayers survive after any passage.

Examine microscopically all the cell cultures frequently throughout the entire incubation period for any signs of cytopathic effect or other evidence of the presence of contaminating agents in the test substance. At the end of the total incubation period, carry out the following procedures.

A. Fix and stain (with Giemsa or haematoxylin and eosin) about 10 cm^2 of confluent cells from each of the 5 monolayers. Examine the cells microscopically for any cytopathic effect, inclusion bodies, syncytial formation, or other evidence of the presence of contaminating agents from the test substance.

B. Drain and wash about 25 cm^2 of cells from each of the 5 monolayers. Cover these cells with a 0.5 per cent suspension of washed chicken erythrocytes (using at least 1 mL of suspension for each 5 cm^2 of cells). Incubate the cells at 4 °C for 20 min and then wash gently in phosphate buffered saline pH 7.4. Examine the cells microscopically for haemadsorption attributable to the presence of a haemadsorbing agent in the test substance.

C. Test individual samples of the fluids from each cell culture using chicken erythrocytes for haemagglutination attributable to the presence of a haemagglutinating agent in the test substance.

The test is not valid if there are any signs of extraneous agents in the negative control cultures. The seed lot complies with the test if there is no evidence of the presence of any extraneous agent.

3. TEST FOR AVIAN LEUCOSIS VIRUSES

Prepare at least 13 replicate monolayers of either DF-1 cells or primary or secondary chick embryo fibroblasts from the tissues of 9- to 11-day-old embryos that are known to be genetically susceptible to subgroups A, B and J of avian leucosis viruses and that support the growth of exogenous but not endogenous avian leucosis viruses (cells from C/E strain chickens are suitable). Each replicate shall have an area of about 50 cm^2.

Remove the culture medium when the cells reach confluence. Inoculate 0.1 mL of the test substance onto each of 5 of the replicate monolayers. Allow adsorption for 1 h, and add culture medium. Inoculate 2 of the replicate monolayers with subgroup A avian leucosis virus (not more than 10 $CCID_{50}$ in 0.1 mL), 2 with subgroup B avian leucosis virus (not more than 10 $CCID_{50}$ in 0.1 mL) and 2 with subgroup J avian leucosis virus (not more than 10 $CCID_{50}$ in 0.1 mL) as positive controls. Maintain not fewer than 2 non-inoculated replicate monolayers as negative controls.

Incubate the cells for a total of at least 9 days, subculturing at 3- to 4-day intervals. Retain cells from each passage level and harvest the cells at the end of the total incubation period. Wash cells from each passage level from each replicate and resuspend the cells at 10^7 cells per millilitre in barbital-buffered saline for subsequent testing by a Complement Fixation for Avian Leucosis (COFAL) test or in phosphate buffered saline for testing by Enzyme-Linked Immunosorbent Assay (ELISA). Then, carry out 3 cycles of freezing and thawing to release any group-specific antigen and perform a COFAL test or an ELISA test on each extract to detect group-specific avian leucosis antigen if present.

The test is not valid if group-specific antigen is detected in fewer than 5 of the 6 positive control replicate monolayers or if a positive result is obtained in any of the negative control monolayers, or if the results for both of the 2 negative control monolayers are inconclusive. If the results for more than 1 of the test replicate monolayers are inconclusive, then further subcultures of reserved portions of the fibroblast monolayers shall be made and tested until an unequivocal result is obtained. If a positive result is obtained for any of the test monolayers, then the presence of avian leucosis virus in the test substance has been detected.

The seed lot complies with the test if there is no evidence of the presence of any avian leucosis virus.

4. TEST FOR AVIAN RETICULOENDOTHELIOSIS VIRUS

Prepare 11 monolayers of primary or secondary chick embryo fibroblasts from the tissues of 9- to 11-day old chick embryos or duck embryo fibroblasts from the tissues of 13- to 14-day-old embryos, each monolayer having an area of about 25 cm^2.

Remove the culture medium when the cells reach confluence. Inoculate 0.1 mL of the test substance onto each of 5 of the monolayers. Allow adsorption for 1 h, and add culture medium. Inoculate 4 of the monolayers with avian reticuloendotheliosis virus as positive controls (not more than 10 $CCID_{50}$ in 0.1 mL). Maintain 2 non-inoculated monolayers as negative controls.

Incubate the cells for a total of at least 10 days, subculturing twice at 3- to 4-day intervals. The test is not valid if fewer than 3 of the 4 positive controls or fewer than 4 of the 5 test monolayers or neither of the 2 negative controls survive after any passage.

For the last subculture, grow the fibroblasts on a suitable substrate so as to obtain an area of about 10 cm^2 of confluent fibroblasts from each of the original 11 monolayers for the subsequent test: test about 10 cm^2 of confluent fibroblasts derived from each of the original 11 monolayers by immunostaining for the presence of avian reticuloendotheliosis virus. The test is not valid if avian reticuloendotheliosis virus is detected in fewer than 3 of the 4 positive control monolayers or in any of the negative control monolayers, or if the results for both of the 2 negative control monolayers are inconclusive. If the results for more than 1 of the test monolayers are inconclusive then further subcultures of reserved portions of the fibroblast monolayers shall be made and tested until an unequivocal result is obtained.

The seed lot complies with the test if there is no evidence of the presence of avian reticuloendotheliosis virus.

5. TEST FOR CHICKEN ANAEMIA VIRUS

Prepare eleven 20 mL suspensions of the MDCC-MSBI cell line or another cell line of equivalent sensitivity in 25 cm^2 cell culture flasks containing about 5×10^5 cells/mL. Inoculate 0.1 mL of the test substance into each of 5 flasks. Inoculate 4 of the suspensions with 10 $CCID_{50}$ chicken anaemia virus as positive controls. Maintain not fewer than 2 non-inoculated suspensions. Maintain all the cell cultures for a total of at least 24 days, subculturing 8 times at 3- to 4-day intervals. During the subculturing the presence of chicken anaemia virus may be indicated by a metabolic colour change in the infected cultures, the culture fluids becoming red in comparison with the control cultures. Examine the cells microscopically for cytopathic effect. At this time or at the end of the incubation period, centrifuge the cells from each flask at low speed and resuspend at about 10^6 cells/mL and place 25 µL in each of 10 wells of a multi-well slide. Examine the cells by immunostaining.

The test is not valid if chicken anaemia virus is detected in fewer than 3 of the 4 positive controls or in any of the non-inoculated controls. If the results for more than 1 of the

test suspensions are inconclusive, then further subcultures of reserved portions of the test suspensions shall be made and tested until an unequivocal result is obtained.

The seed lot complies with the test if there is no evidence of the presence of chicken anaemia virus.

6. TEST FOR EXTRANEOUS AGENTS USING CHICKS

Inoculate each of at least 10 chicks with the equivalent of 100 doses of vaccine by the intramuscular route and with the equivalent of 10 doses by eye-drop. Chicks that are 2 weeks of age are used in the test except that if the seed virus is pathogenic for birds of this age, older birds may be used, if required and justified. In exceptional cases, for inactivated vaccines, the virus may be neutralised by specific antiserum if the seed virus is pathogenic for birds at the age of administration. Repeat these inoculations 2 weeks later. Observe the chicks for a period of 5 weeks from the day of the first inoculation. No antimicrobial agents shall be administered to the chicks during the test period. The test is not valid if fewer than 80 per cent of the chicks survive to the end of the test period.

Collect serum from each chick at the end of the test period. Test each serum sample for antibodies against each of the agents listed below (with the exception of the virus type of the seed lot) using one of the methods indicated for testing for the agent.

Clinical signs of disease in the chicks during the test period (other than signs attributable to the virus of the seed lot) and the detection of antibodies in the chicks after inoculation (with the exception of antibodies to the virus of the seed lot), are classed as evidence of the presence of an extraneous agent in the seed lot.

It is recommended that sera from these birds is retained so that additional testing may be carried out if requirements change.

A. Standard tests

Agent	Type of test
Avian adenoviruses, group 1	SN, EIA, AGP
Avian encephalomyelitis virus	AGP, EIA
Avian infectious bronchitis virus	EIA, HI
Avian infectious laryngotracheitis virus	SN, EIA, IS
Avian leucosis viruses	SN, EIA
Avian nephritis virus	IS
Avian orthoreoviruses	IS, EIA
Avian reticuloendotheliosis virus	AGP, IS, EIA
Chicken anaemia virus	IS, EIA, SN
Egg drop syndrome virus	HI, EIA
Avian infectious bursal disease virus	Serotype 1: AGP, EIA, SN Serotype 2: SN
Influenza A virus	AGP, EIA, HI
Marek's disease virus	AGP
Newcastle disease virus	HI, EIA
Turkey rhinotracheitis virus	EIA
Salmonella pullorum	Agg

Agg: agglutination
AGP: agar gel precipitation
EIA: enzyme immunoassay (e.g. ELISA)
HI: haemagglutination inhibition
IS: immunostaining (e.g. fluorescent antibody)
SN: serum neutralisation

B. Additional tests for turkey extraneous agents

If the seed virus is of turkey origin or was propagated in turkey substrates, tests for antibodies against the following agents are also carried out.

Agent	Type of test
Chlamydia spp.	EIA
Avian infectious haemorrhagic enteritis virus	AGP
Avian paramyxovirus 3	HI
Avian infectious bursal disease virus type 2	SN

A test for freedom from turkey lympho-proliferative disease virus is carried out by intraperitoneal inoculation of twenty 4-week-old turkey poults. Observe the poults for 40 days. The test is not valid if more than 20 per cent of the poults die from non-specific causes. The seed lot complies with the test if sections of spleen and thymus taken from 10 poults 2 weeks after inoculation show no macroscopic or microscopic lesions (other than those attributable to the seed lot virus) and no poult dies from causes attributable to the seed lot.

C. Additional tests for duck extraneous agents

If the seed virus is of duck origin or was propagated in duck substrates, tests for antibodies against the following agents are also carried out.

Agent	Type of test
Chlamydia spp.	EIA
Duck and goose parvoviruses	SN, EIA
Duck enteritis virus	SN
Duck hepatitis virus type I	SN

The seed lot complies with the test if there is no evidence of the presence of any extraneous agent.

D. Additional tests for goose extraneous agents

If the seed virus is of goose origin or was prepared in goose substrates, tests for the following agents are also carried out.

Agent	Type of test
Duck and goose parvovirus	SN, EIA
Duck enteritis virus	SN
Goose haemorrhagic polyomavirus	test in goslings shown below or another suitable test

Inoculate subcutaneously the equivalent of at least 10 doses to each of ten 1-day-old susceptible goslings. Observe the goslings for 28 days. The test is not valid if more than 20 per cent of the goslings die from non-specific causes. The seed virus complies with the test if no gosling dies from causes attributable to the seed lot.

7. ANTIBODY SPECIFICATIONS FOR SERA USED IN EXTRANEOUS AGENTS TESTING

All batches of serum to be used in extraneous agents testing, either to neutralise the vaccine virus (seed lot or batch of finished product) or as a supplement for culture media used for tissue culture propagation, shall be shown to be free from antibodies against and free from inhibitory effects on the following micro-organisms by suitably sensitive tests.

Avian adenoviruses
Avian encephalomyelitis virus
Avian infectious bronchitis viruses
Avian infectious bursal disease virus types 1 and 2
Avian infectious haemorrhagic enteritis virus
Avian infectious laryngotracheitis virus
Avian leucosis viruses
Avian nephritis virus
Avian paramyxoviruses 1 to 9

Avian orthoreoviruses
Avian reticuloendotheliosis virus
Chicken anaemia virus
Duck enteritis virus
Duck hepatitis virus type I
Egg drop syndrome virus
Fowl pox virus
Influenza viruses
Marek's disease virus
Turkey herpesvirus
Turkey rhinotracheitis virus

Non-immune serum for addition to culture media can be assumed to be free from antibodies against any of these viruses if the agent is known not to infect the species of origin of the serum and it is not necessary to test the serum for such antibodies. Monospecific antisera for virus neutralisation can be assumed to be free from the antibodies against any of these viruses if it can be shown that the immunising antigen could not have been contaminated with antigens derived from that virus and if the virus is known not to infect the species of origin of the serum; it is not necessary to test the serum for such antibodies. It is not necessary to retest sera obtained from birds from SPF chicken flocks (*5.2.2*).

Batches of sera prepared for neutralising the vaccine virus must not be prepared from any passage level derived from the virus isolate used to prepare the master seed lot or from an isolate cultured in the same cell line.

01/2008:20625

2.6.25. AVIAN LIVE VIRUS VACCINES: TESTS FOR EXTRANEOUS AGENTS IN BATCHES OF FINISHED PRODUCT

GENERAL PROVISIONS

a) In the following tests, chickens and/or chicken material such as eggs and cell cultures shall be derived from chicken flocks free from specified pathogens (SPF) (*5.2.2*).

b) Cell cultures for the testing of extraneous agents comply with the requirements for the master cell seed of chapter *5.2.4. Cell cultures for the production of veterinary vaccines*, with the exception of the karyotype test and the tumorigenicity test, which do not have to be carried out.

c) In tests using cell cultures, precise specifications are given for the number of replicates, monolayer surface areas and minimum survival rate of the cultures. Alternative numbers of replicates and cell surface areas are possible as well, provided that a minimum of 2 replicates are used, the total surface area and the total volume of vaccine test applied are not less than that prescribed here and the survival rate requirements are adapted accordingly.

d) In these tests, use the liquid vaccine or reconstitute a quantity of the freeze-dried preparation to be tested with the liquid stated on the label or another suitable diluent such as water for injections. Unless otherwise stated or justified, the test substance contains the equivalent of 10 doses in 0.1 mL of inoculum.

e) If the vaccine virus would interfere with the conduct and sensitivity of the test, neutralise the virus in the preparation with a monospecific antiserum.

f) Where specified in a monograph or otherwise justified, if neutralisation of the vaccine virus is required but difficult to achieve, the *in vitro* tests described below are adapted, as required, to provide the necessary guarantees of freedom from contamination with an extraneous agent. Alternatively, or in addition to *in vitro* tests conducted on the batch, a test for extraneous agents may be conducted on chick sera obtained from testing the batch of vaccine, as decribed under 6. Test for extraneous agents using chicks of chapter *2.6.24. Test for extraneous agents in seed lots*.

g) Monospecific antiserum and serum of avian origin used for cell culture and any other purpose, in any of these tests, shall be free of antibodies against and free from inhibitory effects on the organisms listed under 7. Antibody specifications for sera used in extraneous agents testing (*2.6.24*).

h) Other types of tests than those indicated may be used provided they are at least as sensitive as those indicated and of appropriate specificity. Nucleic acid amplification techniques (*2.6.21*) give specific detection for many agents and can be used after validation for sensitivity and specificity.

1. TEST FOR EXTRANEOUS AGENTS USING EMBRYONATED HENS' EGGS

Prepare the test vaccine, diluted if necessary, to contain neutralised virus equivalent to 10 doses of vaccine in 0.2 mL of inoculum. Suitable antibiotics may be added. Inoculate the test vaccine into 3 groups of 10 embryonated hens' eggs as follows:

- group 1: 0.2 mL into the allantoic cavity of each 9- to 11-day-old embryonated egg,
- group 2: 0.2 mL onto the chorio-allantoic membrane of each 9- to 11-day-old embryonated egg,
- group 3: 0.2 mL into the yolk sac of each 5- to 6-day-old embryonated egg.

Candle the eggs in groups 1 and 2 daily for 7 days and the eggs in group 3 for 12 days. Discard embryos that die during the first 24 h as non-specific deaths; the test is not valid unless at least 6 embryos in each group survive beyond the first 24 h after inoculation. Examine macroscopically for abnormalities all embryos which die more than 24 h after inoculation, or which survive the incubation period. Examine also the chorio-allantoic membranes of these eggs for any abnormality and test the allantoic fluids for the presence of haemagglutinating agents.

Carry out a further embryo passage. Pool separately material from live and from the dead and abnormal embryos. Inoculate each pool into 10 eggs for each route as described above, chorio-allantoic membrane material being inoculated onto chorio-allantoic membranes, allantoic fluids into the allantoic cavity and embryo material into the yolk sac. For eggs inoculated by the allantoic and chorio-allantoic routes, candle the eggs daily for 7 days, proceeding and examining the material as described above. For eggs inoculated by the yolk sac route, candle the eggs daily for 12 days, proceeding and examining the material as described above.

The batch of vaccine complies with the test if no test embryo shows macroscopic abnormalities or dies from causes attributable to the vaccine and if examination of the chorio-allantoic membranes and testing of the allantoic fluids show no evidence of the presence of extraneous agents.

2. TEST IN CHICKEN EMBRYO FIBROBLAST CELLS

Prepare 7 monolayers of primary or secondary chicken embryo fibroblasts, from the tissues of 9- to 11-day-old embryos, each monolayer having an area of about 25 cm^2. Maintain 2 monolayers as negative controls and treat these in the same way as the 5 monolayers inoculated with the test vaccine, as described below. Remove the culture medium when the cells reach confluence. Inoculate 0.1 mL of test vaccine onto each of 5 of the monolayers. Allow adsorption for 1 h and add culture medium. Incubate the cultures for a total of at least 21 days, subculturing at 4- to 5-day intervals. Each passage is made with pooled cells and fluids from all 5 monolayers after carrying out a freeze-thaw cycle. Inoculate 0.1 mL of pooled material onto each of 5 recently prepared monolayers of chicken embryo fibroblast cells, each monolayer having an area of about 25 cm^2 each as before. For the last passage, grow the cells also on a suitable substrate so

as to obtain an area of about 10 cm^2 of cells from each of the monolayers, for test A. The test is not valid if less than 80 per cent of the test monolayers, or neither of the 2 negative control monolayers survive after any passage.

Examine microscopically all the cell cultures frequently throughout the entire incubation period for any signs of cytopathic effect or other evidence of the presence of contaminating agents in the test vaccine. At the end of the total incubation period, carry out the following procedures.

A. Fix and stain (with Giemsa or haematoxylin and eosin) about 10 cm^2 of confluent cells from each of the 5 original monolayers. Examine the cells microscopically for any cytopathic effect, inclusion bodies, syncytial formation, or any other evidence of the presence of a contaminating agent from the test vaccine.

B. Drain and wash about 25 cm^2 of cells from each of the 5 monolayers. Cover these cells with a 0.5 per cent suspension of washed chicken red blood cells (using at least 1 mL of suspension for each 5 cm^2 of cells). Incubate the cells at 4 °C for 20 min and then wash gently in phosphate buffered saline pH 7.4. Examine the cells microscopically for haemadsorption attributable to the presence of a haemadsorbing agent in the test vaccine.

C. Test individually samples of the fluid from each cell culture using chicken red blood cells for haemagglutination attributable to the presence of a haemagglutinating agent in the test vaccine.

The test is not valid if there are any signs of extraneous agents in the negative control cultures. The batch of vaccine complies with the test if there is no evidence of the presence of any extraneous agent.

3. TEST FOR EGG DROP SYNDROME VIRUS

Prepare 11 monolayers of chicken embryo liver cells, from the tissues of 14- to 16-day-old embryos, each monolayer having an area of about 25 cm^2. Remove the culture medium when the cells reach confluence. Inoculate 0.1 mL of test vaccine onto each of 5 of the monolayers (test monolayers). Allow adsorption for 1 h, add culture medium. Inoculate 4 of the monolayers with a suitable strain of egg drop syndrome virus (not more than 10 $CCID_{50}$ in 0.1 mL) to serve as positive control monolayers. Maintain 2 non-inoculated monolayers as negative control monolayers.

Incubate the cells for a total of at least 21 days, subculturing every 4-5 days. Each passage is made as follows: carry out a freeze-thaw cycle; prepare separate pools of the cells plus fluid from the test monolayers, from the positive control monolayers and from the negative control monolayers; inoculate 0.1 mL of the pooled material onto each of 5, 4 and 2 recently prepared monolayers of chicken embryo liver cells, each monolayer having an area of about 25 cm^2 as before. The test is not valid if fewer than 4 of the 5 test monolayers or fewer than 3 of the 4 positive controls or neither of the 2 negative control monolayers survive after any passage.

Examine microscopically all the cell cultures at frequent intervals throughout the entire incubation period for any signs of cytopathic effect or other evidence of the presence of a contaminating agent in the test vaccine. At the end of the total incubation period, carry out the following procedure: test separately, cell culture fluid from the test monolayers, positive control monolayers and negative control monolayers, using chicken red blood cells, for haemagglutination attributable to the presence of haemagglutinating agents.

The test is not valid if egg drop syndrome virus is detected in fewer than 3 of the 4 positive control monolayers or in any of the negative control monolayers, or if the results for both of the 2 negative control monolayers are inconclusive. If the results for more than 1 of the test monolayers are inconclusive then further subcultures of reserved portions of the monolayers shall be made and tested until an unequivocal result is obtained.

The batch of vaccine complies with the test if there is no evidence of the presence of egg drop syndrome virus or any other extraneous agent.

4. TEST FOR MAREK'S DISEASE VIRUS

Prepare 11 monolayers of primary or secondary chick embryo fibroblasts from the tissues of 9- to 11-day-old embryos, each monolayer having an area of about 25 cm^2. Remove the culture medium when the cells reach confluence. Inoculate 0.1 mL of test vaccine onto each of 5 of the monolayers (test monolayers). Allow adsorption for 1 h, and add culture medium. Inoculate 4 of the monolayers with a suitable strain of Marek's disease virus (not more than 10 $CCID_{50}$ in 0.1 mL) to serve as positive controls. Maintain 2 non-inoculated monolayers as negative controls.

Incubate the cultures for a total of at least 21 days, subculturing at 4- to 5-day intervals. Each passage is made as follows: trypsinise the cells, prepare separate pools of the cells from the test monolayers, from the positive control monolayers and from the negative control monolayers. Mix an appropriate quantity of each with a suspension of freshly prepared primary or secondary chick embryo fibroblasts and prepare 5, 4 and 2 monolayers, as before. The test is not valid if fewer than 4 of the 5 test monolayers or fewer than 3 of the 4 positive controls or neither of the 2 negative control monolayers survive after any passage.

Examine microscopically all the cell cultures frequently throughout the entire incubation period for any signs of cytopathic effect or other evidence of the presence of a contaminating agent in the test vaccine.

For the last subculture, grow the cells on a suitable substrate so as to obtain an area of about 10 cm^2 of confluent cells from each of the original 11 monolayers for the subsequent test: test about 10 cm^2 of confluent cells derived from each of the original 11 monolayers by immunostaining for the presence of Marek's disease virus. The test is not valid if Marek's disease virus is detected in fewer than 3 of the 4 positive control monolayers or in any of the negative control monolayers, or if the results for both of the 2 negative control monolayers are inconclusive.

The batch of vaccine complies with the test if there is no evidence of the presence of Marek's disease virus or any other extraneous agent.

5. TESTS FOR TURKEY RHINOTRACHEITIS VIRUS

A. In chicken embryo fibroblasts

NOTE: this test can be combined with Test 2 by using the same test monolayers and negative controls, for all stages up to the final specific test for turkey rhinotracheitis virus on cells prepared from the last subculture.

Prepare 11 monolayers of primary or secondary chick embryo fibroblasts from the tissues of 9- to 11-day-old embryos, each monolayer having an area of about 25 cm^2. Remove the culture medium when the cells reach confluence. Inoculate 0.1 mL of test vaccine onto each of 5 of the monolayers (test monolayers). Allow adsorption for 1 h, and add culture medium. Inoculate 4 of the monolayers with a suitable strain of turkey rhinotracheitis virus as positive controls (not more than 10 $CCID_{50}$ in 0.1 mL). Maintain 2 non-inoculated monolayers as negative controls.

Incubate the cultures for a total of at least 21 days, subculturing at 4- to 5-day intervals. Each passage is made as follows: carry out a freeze-thaw cycle; prepare separate pools of the cells plus fluid from the test monolayers, from the positive control monolayers and from the negative control monolayers; inoculate 0.1 mL of the pooled material onto each of 5, 4 and 2 recently prepared monolayers of chicken embryo fibroblasts cells, each monolayer having an area of about 25 cm^2 as before. The

test is not valid if fewer than 4 of the 5 test monolayers or fewer than 3 of the 4 positive controls or neither of the 2 negative control monolayers survive after any passage.

For the last subculture, grow the cells on a suitable substrate so as to obtain an area of about 10 cm^2 of confluent cells from each of the original 11 monolayers for the subsequent test: test about 10 cm^2 of confluent cells derived from each of the original 11 monolayers by immunostaining for the presence of turkey rhinotracheitis virus. The test is not valid if turkey rhinotracheitis virus is detected in fewer than 3 of the 4 positive control monolayers or in any of the negative control monolayers, or if the results for both of the 2 negative control monolayers are inconclusive. If the results for both of the 2 test monolayers are inconclusive then further subcultures of reserved portions of the fibroblasts shall be made and tested until an unequivocal result is obtained.

The batch of vaccine complies with the test if there is no evidence of the presence of turkey rhinotracheitis virus or any other extraneous agent.

B. In Vero cells

Prepare 11 monolayers of Vero cells, each monolayer having an area of about 25 cm^2. Remove the culture medium when the cells reach confluence. Inoculate 0.1 mL of test vaccine onto each of 5 of the monolayers (test monolayers). Allow adsorption for 1 h, and add culture medium. Inoculate 4 of the monolayers with a suitable strain of turkey rhinotracheitis virus (not more than 10 $CCID_{50}$ in 0.1 mL) to serve as positive controls. Maintain 2 non-inoculated monolayers as negative controls.

Incubate the cultures for a total of at least 21 days, subculturing at 4- to 5-day intervals. Each passage is made as follows: carry out a freeze-thaw cycle. Prepare separate pools of the cells plus fluid from the test monolayers, from the positive control monolayers and from the negative control monolayers. Inoculate 0.1 mL of the pooled material onto each of 5, 4 and 2 recently prepared monolayers of Vero cells, each monolayer having an area of about 25 cm^2 as before. The test is not valid if fewer than 4 of the 5 test monolayers or fewer than 3 of the 4 positive controls or neither of the 2 negative controls survive after any passage.

For the last subculture, grow the cells on a suitable substrate so as to obtain an area of about 10 cm^2 of confluent cells from each of the original 11 monolayers for the subsequent test: test about 10 cm^2 of confluent cells derived from each of the original 11 monolayers by immunostaining for the presence of turkey rhinotracheitis virus. The test is not valid if turkey rhinotracheitis virus is detected in fewer than 3 of the 4 positive control monolayers or in any of the negative control monolayers, or if the results for both of the 2 negative control monolayers are inconclusive. If the results for more than 1 of the test monolayers are inconclusive then further subcultures of reserved portions of the monolayers shall be made and tested until an unequivocal result is obtained.

The batch of vaccine complies with the test if there is no evidence of the presence of turkey rhinotracheitis virus or any other extraneous agent.

6. TEST FOR CHICKEN ANAEMIA VIRUS

Prepare eleven 20 mL suspensions of the MDCC-MSBI cell line or another cell line of equivalent sensitivity in 25 cm^2 flasks containing about 5×10^5 cells/mL. Inoculate 0.1 mL of test vaccine into each of 5 of these flasks. Inoculate 4 other suspensions with 10 $CCID_{50}$ chicken anaemia virus as positive controls. Maintain not fewer than 2 non-inoculated suspensions. Maintain all the cell cultures for a total of at least 24 days, subculturing 8 times at 3- to 4-day intervals. During the subculturing the presence of chicken anaemia virus may be indicated by a metabolic colour change in the infected cultures, the culture fluids becoming red in comparison with the control cultures. Examine the cells microscopically for cytopathic effect. At this time or at the end of the incubation period, centrifuge the cells from each flask at low speed, resuspend at about 10^6 cells per millilitre and place 25 µL in each of 10 wells of a multi-well slide. Examine the cells by immunostaining.

The test is not valid if chicken anaemia virus is detected in fewer than 3 of the 4 positive controls or in any of the non-inoculated controls. If the results for more than 1 of the test suspensions are inconclusive then further subcultures of reserved portions of the test suspensions shall be made and tested until an unequivocal result is obtained.

The batch of vaccine complies with the test if there is no evidence of the presence of chicken anaemia virus.

7. TEST FOR DUCK ENTERITIS VIRUS

This test is carried out for vaccines prepared on duck or goose substrates.

Prepare 11 monolayers of primary or secondary Muscovy duck embryo liver cells, from the tissues of 21- or 22-day-old embryos, each monolayer having an area of about 25 cm^2. Remove the culture medium when the cells reach confluence. Inoculate 0.1 mL of test vaccine onto each of 5 of the monolayers (test monolayers). Allow adsorption for 1 h and add culture medium. Inoculate 4 of the monolayers with a suitable strain of duck enteritis virus (not more than 10 $CCID_{50}$ in 0.1 mL) to serve as positive controls. Maintain 2 non-inoculated monolayers as negative controls.

Incubate the cultures for a total of at least 21 days, subculturing at 4- to 5-day intervals. Each passage is made as follows: trypsinise the cells and prepare separate pools of the cells from the test monolayers, from the positive control monolayers and from the negative control monolayers. Mix a portion of each with a suspension of freshly prepared primary or secondary Muscovy duck embryo liver cells to prepare 5, 4 and 2 monolayers, as before. The test is not valid if fewer than 4 of the 5 test monolayers or fewer than 3 of the 4 positive controls or neither of the 2 negative controls survive after any passage.

For the last subculture, grow the cells on a suitable substrate so as to obtain an area of about 10 cm^2 of confluent cells from each of the original 11 monolayers for the subsequent test: test about 10 cm^2 of confluent cells derived from each of the original 11 monolayers by immunostaining for the presence of duck enteritis virus. The test is not valid if duck enteritis virus is detected in fewer than 3 of the 4 positive control monolayers or in any of the negative control monolayers, or if the results for both of the 2 negative control monolayers are inconclusive. If the results for more than 1 of the test monolayers are inconclusive then further subcultures of reserved portions of the monolayers shall be made and tested until an unequivocal result is obtained.

The batch of vaccine complies with the test if there is no evidence of the presence of duck enteritis virus or any other extraneous agent.

8. TEST FOR DUCK AND GOOSE PARVOVIRUSES

This test is carried out for vaccines prepared on duck or goose substrates.

Prepare a suspension of sufficient primary or secondary Muscovy duck embryo fibroblasts from the tissues of 16- to 18-day-old embryos, to obtain not fewer than 11 monolayers, each having an area of about 25 cm^2. Inoculate 0.5 mL of test vaccine into an aliquot of cells for 5 monolayers and seed into 5 replicate containers to form 5 test monolayers. Inoculate 0.4 mL of a suitable strain of duck parvovirus (not more than 10 $CCID_{50}$ in 0.1 mL) into an aliquot of cells for 4 monolayers and seed into 4 replicate containers to form 4 positive control monolayers. Prepare 2 non-inoculated monolayers as negative controls.

Incubate the cultures for a total of at least 21 days, subculturing at 4- to 5-day intervals. Each passage is made as follows: carry out a freeze-thaw cycle. Prepare separate pools of the cells plus fluid from the test monolayers, from the positive control monolayers and from the negative control monolayers. Inoculate 0.5 mL, 0.4 mL and 0.2 mL of the pooled materials into aliquots of a fresh suspension of sufficient primary or secondary Muscovy duck embryo fibroblast cells to prepare 5, 4 and 2 monolayers, as before. The test is not valid if fewer than 4 of the 5 test monolayers or fewer than 3 of the 4 positive controls or neither of the 2 negative controls survive after any passage.

For the last subculture, grow the cells on a suitable substrate so as to obtain an area of about 10 cm^2 of confluent cells from each of the original 11 monolayers for the subsequent test: test about 10 cm^2 of confluent cells derived from each of the original 11 monolayers by immunostaining for the presence of duck or goose parvovirus. The test is not valid if duck parvovirus is detected in fewer than 3 of the 4 positive control monolayers or in any of the negative control monolayers, or if the results for both of the 2 negative control monolayers are inconclusive.

The batch of vaccine complies with the test if there is no evidence of the presence of duck (o

he
610ro(s) 5 (s) -15 t-8.9w (e)] TJ 9.42 0 0 9.45 6993827rs -10 (t-12.1 (e2-7 (s) 15.of)] TT /T2_0 1 Tf 9.42 0 0 9.43 .5.4699595.75 Tm 0.06 Tc Ref(i) 7

the

o1112⊠(t)⊠-7⊠(a)⊠-1i⊠ived
0 C (l) ⊠ 1 1 3 ⊠ (.) ⊠ ⊠ T J ⊠ 9 . 4 2 ⊠ 0 ⊠ 0 ⊠ 9 . 4 2 ⊠ 1 5 4 . 4 0 2 5 1 0 A

01/2011:20627

2.6.27. MICROBIOLOGICAL CONTROL OF CELLULAR PRODUCTS

This test has been shown to be preferable to the test for sterility (*2.6.1*) for certain cellular products, since it has better sensitivity, has a broader range, and is more rapid. It is applied instead of the test for sterility (*2.6.1*) where prescribed in a monograph. It may be carried out manually or using an automated system.

GENERAL PRECAUTIONS

The test is carried out under aseptic conditions according to current regulations for potentially infective material.

The precautions taken to avoid contamination are such that they do not affect any micro-organisms that are to be revealed in the test. The test is performed under working conditions that are monitored regularly by appropriate sampling of the working area and by carrying out appropriate controls.

GROWTH PROMOTION TEST

Use at least 2 suitable enriched culture media (for example, blood culture media) intended for detection of fungi and aerobic and anaerobic bacteria.

Confirm the sterility of each batch of medium by the incubation of representative containers at 35-37 °C for not less than 7 days.

Each batch of medium is tested by the supplier and/or the user for its growth-promoting capacities by inoculating duplicate test containers of each medium with 10-100 viable micro-organisms of each of the strains listed in Table 2.6.27.-1, and incubating for either 7 days for automated detection or 14 days for visual detection of microbial growth at 35-37 °C. The test media are satisfactory if there is clear evidence of growth in all inoculated media containers within this period.

Table 2.6.27.-1. – *Micro-organisms used for growth promotion*

Aerobic medium	
Staphylococcus aureus	for example, ATCC 6538, CIP 4.83, NCTC 10788, NCIMB 9518
Bacillus subtilis	for example, ATCC 6633, CIP 52.62, NCIMB 8054
Pseudomonas aeruginosa	for example, ATCC 9027, NCIMB 8626, CIP 82.118
Candida albicans	for example, ATCC 10231, IP 48.72, NCPF 3179
Aspergillus brasiliensis	for example, ATCC 16404, IP 1431.83, IMI 149007
Anaerobic medium	
Clostridium sporogenes	for example, ATCC 19404, CIP 79.3, NCTC 532 or ATCC 11437
Bacteroides fragilis	for example, ATCC 25285, CIP 77.16, NCTC 9343

METHOD VALIDATION

Depending on the type of product, its method of preparation, the inoculum volume used and the type of test system, the need for validation in the presence of the type of preparation to be examined must be considered. Unless otherwise justified and authorised, the test system is validated with respect to specificity (absence of false positive results), sensitivity (limit of detection) and reproducibility. During validation, particularly to determine the limit of detection, the test is carried out using the preparation deliberately contaminated to different degrees with the following micro-organisms, chosen for the likelihood of contamination and their growth requirements:

- *Aspergillus brasiliensis*, for example, ATCC 16404, IP 1431.83, IMI 149007;
- *Bacillus subtilis*, for example, ATCC 6633, CIP 52.62, NCIMB 8054;
- *Candida albicans*, for example, ATCC 10231, IP 48.72, NCPF 3179;
- *Clostridium sporogenes*, for example, ATCC 19404, CIP 79.3, NCTC 532 or ATCC 11437;
- *Propionibacterium acnes*, for example, ATCC 11827;
- *Pseudomonas aeruginosa*, for example, ATCC 9027, NCIMB 8626, CIP 82.118;
- *Staphylococcus aureus*, for example, ATCC 6538, CIP 4.83, NCTC 10788, NCIMB 9518;
- *Streptococcus pyogenes*, for example, ATCC 19615, CIP 1042.26, NCIMB 13285;
- *Yersinia enterocolitica*, for example, ATCC 9610, CIP 80.27, NCTC 12982.

It may be necessary to modify the list of micro-organisms depending on the origin of the cells and any micro-organisms previously found or associated with the particular type of cells.

Other approaches to validation may also be used, for example, interlaboratory comparison.

TESTING OF THE PREPARATION TO BE EXAMINED

Sample. A representative sample including cells and/or medium is tested. The sample is added to the culture medium as soon as possible after collection. If it is not added promptly after collection, it is stored at 5 ± 3 °C to avoid phagocytosis of micro-organisms by cells present in certain types of products (for example, neutrophils).

For haematopoietic products, the minimum amount to be used for the test depending on the total volume of the product (V mL) is shown below.

Total product volume (millilitres)	Inoculum volume
$V \geq 10$	1 per cent of total volume
$1 \leq V < 10$	100 µL
$V < 1$	Not applicable

For haematopoietic products that require dilution before freezing, the inoculum volume must be increased by the dilution factor. For other cellular products, suitable minimum amounts are defined in terms of volume or number of doses.

Analysis. Samples are inoculated into containers of culture medium as soon as possible after collection and incubated at 35-37 °C for not less than 7 or 14 days, depending on the detection system used. A suitable proportion of the inoculum is added to the medium to be incubated in aerobic conditions and the remainder of the inoculum to the medium to be incubated in anaerobic conditions.

OBSERVATION AND INTERPRETATION OF RESULTS

Examine media, visually or with automated systems at least daily, and at the end of the observation period for evidence of microbial growth. If no growth is observed during or at the end of the observation period, the product is 'culture negative' at the limit of detection. If growth is observed in a valid test, the product is 'culture positive'; the contaminant is identified to a suitable taxonomic level (genus, species) and an antibiogram is established.

04/2010:20630

2.6.30. MONOCYTE-ACTIVATION TEST

1. INTRODUCTION

The monocyte activation test (MAT) is used to detect or quantify substances that activate human monocytes or monocytic cells to release endogenous mediators: such as pro-inflammatory cytokines, for example tumour necrosis factor alpha (TNFα), interleukin-1 beta (IL-1β) and interleukin-6 (IL-6). These cytokines have a role in fever pathogenesis. Consequently, the MAT will detect the presence of pyrogens in the test sample. The MAT is suitable, after a product-specific validation, as a replacement for the rabbit pyrogen test.

Pharmaceutical products that contain non-endotoxin pyrogenic or pro-inflammatory contaminants often show very steep dose-response curves in comparison with endotoxin dose-response curves. Frequently the greatest response to such contaminated products is obtained with undiluted solutions of the preparations being examined or small dilutions of the preparations being examined. For this reason preparations that contain or may contain non-endotoxin contaminants have to be tested at a range of dilutions that includes minimum dilution.

The following 3 methods are described in the present chapter.

Method A. Quantitative test

Method B. Semi-quantitative test

Method C. Reference lot comparison test

The test is carried out in a manner that avoids pyrogen contamination.

2. DEFINITIONS

The maximum valid dilution (MVD) is the maximum allowable dilution of a sample at which the contaminant limit can be determined. Determine the MVD using the following expression:

$$\frac{CLC \times C}{LOD}$$

CLC = contaminant limit concentration;

C = concentration of test solution;

LOD = limit of detection.

The acceptance criterion for a pass/fail decision is the contaminant limit concentration (CLC), which is expressed in endotoxin equivalents per milligram or millilitre, or in units of biological activity of the preparation being examined.

The CLC is calculated using the following expression:

$$\frac{K}{M}$$

K = threshold pyrogenic dose of endotoxin per kilogram of body mass;

M = maximum recommended bolus dose of product per kilogram of body mass.

When the product is to be injected at frequent intervals or infused continuously, *M* is the maximum total dose administered in a single hour period.

Where an endotoxin limit concentration (ELC) has been specified for a product, the CLC is the same as the ELC, unless otherwise prescribed. In this case, the concentration of test solution is expressed in mg/mL if the endotoxin limit is specified by mass (IU/mg), in Units/mL if the endotoxin limit is specified by unit of biological activity (IU/Unit), in mL/mL if the endotoxin limit is specified by volume (IU/mL).

Endotoxin equivalents are values for the contaminant concentration read off the standard endotoxin dose-response curve (Method A) or estimated by comparison with responses to standard endotoxin solutions (Method B). The standard endotoxin stock solution is prepared from an endotoxin reference standard that has been calibrated against the International Standard, for example *endotoxin standard BRP*.

The cut-off value is calculated using the following expression:

$$\overline{x} + 3s$$

$\overline{x}$ = mean of the 4 replicates for the responses to the blank (R_0);

s = standard deviation of the 4 replicates of the responses to the blank (R_0).

The cut-off value is expressed in units appropriate to the read-out.

The limit of detection (LOD) is determined using the endotoxin standard curve. The LOD is the concentration of endotoxin corresponding to the cut-off value. For the purpose of the test, the LOD is expressed as endotoxin equivalents per millilitre.

3. GENERAL PROCEDURE

A solution of the preparation being examined is incubated with a source of human monocytes or human monocytic cells, e.g. from human heparinised peripheral blood that is preferably not more than 4 h old, or a monocyte-containing fraction of that blood, such as human peripheral blood mononuclear cells (PBMC) isolated, e.g. by density-gradient centrifugation, or a human monocytic cell line. Human heparinised peripheral blood is usually diluted with culture medium or saline e.g. to 2-50 per cent *V/V* (final concentration). PBMC or monocytic cell lines, in culture medium and with either the donor's own plasma or AB serum, are typically used at a final cell density of 0.1-1.0 × 10^6 cells per well, tube or other receptacle. For monocytic cell lines, heat-inactivated foetal bovine serum may be substituted for AB serum. The cell culture is carried out at 37 ± 1 °C, in an atmosphere appropriate for the culture medium, e.g. 5 per cent CO_2 in humidified air. The duration of the culture is sufficient to allow accumulation of the chosen read-out. The responses of the chosen read-out, e.g. a pro-inflammatory or pyrogenic cytokine, to a solution of the preparation being examined are compared with responses to standard endotoxin or to a reference lot of the preparation being examined. The chosen read-out method is calibrated using the appropriate standard.

4. APPARATUS

Depyrogenate all glassware and other heat-stable apparatus in a hot-air oven using a validated process. A commonly used minimum time and temperature is 30 min at 250 °C. If employing plastic apparatus, such as microtitre plates and pipette tips for automatic pipetters, use apparatus shown to be free of detectable pyrogens and which do not interfere with the test.

5. CELL SOURCES AND QUALIFICATION

5-1. *WHOLE BLOOD*

Whole blood is obtained from single donors or from pooled whole blood which are qualified according to the requirements described under section 5-3 and section 5-4, respectively.

5-2. *PERIPHERAL BLOOD MONONUCLEAR CELLS (PBMC)*

PBMC are isolated from blood obtained from single donors or from pooled whole blood which are qualified according to the requirements described under section 5-3 and section 5-4, respectively.

5-3. *QUALIFICATION OF BLOOD DONORS*

Blood donors are to satisfy the following qualification criteria, together with other requirements in force that relate to consent, health and safety and ethical considerations. Blood

donors are to describe themselves as being in good health, as not to be suffering from any bacterial or viral infections and to have been free from the symptoms of any such infection for a period of at least 1 week prior to the donation of blood. Blood donors are not to have taken non-steroidal anti-inflammatory drugs during the 48 h prior to donating blood and steroidal anti-inflammatory drugs during the 7 days prior to donating blood. Individuals who have been prescribed immunosuppressant or other drugs known to influence the production of the chosen readout are not to serve as blood donors. Blood donation are to be tested for infection markers according to national requirements for transfusion medicine.

5-4. *QUALIFICATION OF CELLS POOLED FROM A NUMBER OF DONORS*

Pools (of whole blood or blood fractions, e.g. PBMC), must consist of donations from a minimum of 4 individual donors but preferably 8 or more donors, where practicable, taking from each donation an approximately equal volume of blood, or cells from an approximately equal volume of blood. For the qualification of pooled cells proceed as follows: within 4 hours of collection of blood, generate dose-response curves from the pool using standard endotoxin with at least 4 geometrically diluted endotoxin concentrations, e.g. in the range of 0.01 IU/mL to 4 IU/mL. The dose-response curves are to meet the 2 criteria for the standard curve described under section 6-1.

5-5. *QUALIFICATION OF CRYO-PRESERVED CELLS*

The cell source intended for use in a MAT, e.g. human whole blood, blood fractions, such as PBMC or monocytic cell lines, may be cryo-preserved. Pools of cryo-preserved cells are obtained by pooling before freezing, or by pooling single cryo-preserved donations immediately after thawing. Pools must consist of donations from a minimum of 4 individual donors but preferably 8 or more donors where practicable, taking from each donation an approximately equal volume of blood, or cells from an approximately equal volume of blood. Qualification of cryo-preserved blood or cells is performed immediately after thawing (and pooling if necessary): dose-response curves for cryo-preserved blood or cells are to comply with the 2 criteria for the standard curve as described under section 6-1.

5-6. *MONOCYTIC CONTINUOUS CELL LINES*

A human monocytic cell line is continuously cultured in order to warrant a sufficient supply for the MAT. To optimise the method, clones derived from the cell line can be used.

Cells must be maintained under aseptic conditions and regularly tested for the presence of mycoplasma contamination. Additionally, cells must be regularly checked for identity (e.g. doubling time, morphology, and function) and stability. The functional stability of a cell line is assessed by monitoring its performance in relation to the number of passages during routine testing. Criteria for functional stability are to be established and may include growth criteria, maximum signal obtained in the test, background noise and receptor expression. The receptor expression may be tested with specific ligands e.g. lipopolysaccharide (LPS) for toll-like receptor 4 (TLR4), lipoteichoic acid (LTA) for toll-like receptor 2 (TLR2), synthetic bacterial lipoprotein for TLR2-TLR1 or synthetic bacterial lipoprotein for TLR2-TLR6.

6. PREPARATORY TESTING

To ensure both the precision and validity of the test, preparatory tests are conducted, to assure that the criteria for the standard curve are satisfied, that the solution does not interfere with the test, that the test detects endotoxins and non-endotoxins contaminants and that the solution does not interfere in the detection system.

6-1. *ASSURANCE OF CRITERIA FOR THE STANDARD CURVE*

Using the standard endotoxin solution, prepare at least 4 endotoxin concentrations to generate the standard curve. Perform the test using at least 4 replicates of each concentration of standard endotoxin.

The basal release of the chosen read-out (blank) in the absence of added standard endotoxin is to be optimised to be as low as possible.

There are 2 acceptance criteria for the standard curve:

- the regression of responses (appropriately transformed if necessary) on log dose shall be statistically significant ($p < 0.01$);
- the regression of responses on log dose must not deviate significantly from linearity ($p > 0.05$). If analysis for a 4-parameter logistic curve is performed, then the observed curve must not deviate significantly from the theoretical curve as calculated by using the usual statistical methods (see chapter *5.3. Statistical analysis*).

6-2. *TEST FOR INTERFERING FACTORS*

To assure the validity of the test, preparatory tests are conducted to assure that the test solution does not interfere with the test. Validation of the test method is required when any changes are made to the experimental conditions that are likely to influence the result of the test. Using an appropriate diluent, dilute the preparation to be examined in geometric steps, with all dilutions not exceeding the MVD. Make the same dilutions of the preparation to be examined and add endotoxin at a concentration equal to or near the middle of the standard curve (Method A) or equal to twice the LOD (Method B), or use a diluent containing added endotoxin at a concentration equal to or near the middle of the standard curve (Method A) or equal to twice the LOD (Method B). Test these dilution series in parallel in the same experiment. Use the standard curve to calculate the concentration of endotoxin-equivalents in each solution. Calculate the mean recovery of the added endotoxin by subtracting the mean concentration of endotoxin equivalents in the solution (if any) from that in the solution containing the added endotoxin. The test solution is considered free of interfering factors if, under the conditions of the test, the measured endotoxin equivalents in the test solution to which endotoxin is added is within 50-200 per cent of the added concentration, after subtraction of any endotoxin equivalents detected in the solution without added endotoxin. When this criterion is not met, Method C is to be preferred over Methods A and B.

In Method C, a solution of the preparation being examined is tested at 3 dilutions: the highest concentration (lowest dilution) that stimulates the greatest release of the chosen read-out and the 2-fold dilutions immediately below and above the chosen dilution. Since the concentration that stimulates the greatest release of the chosen read-out may be donor-dependent as well as batch-dependent, the product-specific validation is to be performed in at least 3 independent tests, each using cells from different donors. The highest concentration (lowest dilution) that stimulates the greatest release of the chosen read-out in the majority of donors, and the 2-fold dilutions immediately below and above that dilution are deemed to be validated for further testing. If undiluted test solution stimulates the greatest release of the chosen read-out, subsequent testing is to be performed using undiluted test solution and also test solution diluted in the ratios 1:2 and 1:4 before its addition to the PBMC. The 3 dilutions to be used in subsequent testing are not to exceed the MVD; the dilution factors for these 3 solutions are designated f_1, f_2 and f_3. Following the product-specific validation, the test is routinely performed with cells from 4 individual donors or a single pool or with cells from 1 passage of a human monocytic cell line.

6-3. *METHOD VALIDATION FOR NON-ENDOTOXIN MONOCYTE-ACTIVATING CONTAMINANTS*

The preparatory testing is also to show that the chosen test system detects, in addition to bacterial endotoxins, non-endotoxin pro-inflammatory or pyrogenic contaminants. This can be achieved using historic batches that have been found to be contaminated with non-endotoxin contaminants that caused positive responses in the rabbit pyrogens test or adverse drug reactions in man. Where such batches are not available, the preparatory testing is to include validation of the test system using specific ligands for toll-like receptors, e.g. peptidoglycans, lipoteichoic acids or synthetic bacterial lipoproteins.

6-4. *INTERFERENCE IN THE DETECTION SYSTEM*

Once the optimum dilution of the solution of the preparation being examined for further testing has been identified, this dilution is tested for interference in the detection system (e.g. ELISA) for the chosen read-out. The agreement between a dilution series of the standard for the chosen read-out, in the presence and absence of the test preparation, is to be within ± 20 per cent.

7. METHODS

7-1. *METHOD A: QUANTITATIVE TEST*

Method A involves a comparison of the preparation being examined with a standard endotoxin dose-response curve. The contaminant concentration of the preparation being examined is to be less than the CLC to pass the test.

7-1-1. **Test procedure**

Using the validated test method, prepare the solutions shown in Table 2.6.30.-1 and culture 4 replicates of each solution with cells from each of 4 individual donors or a single pool or with cells from 1 passage of a human monocytic cell line.

Table 2.6.30.-1

Solution	Solution	Added endotoxin (IU/mL)	Number of replicates
A	Test solution/*f*	None	4
B	Test solution/2 × *f*	None	4
C	Test solution/4 × *f*	None	4
D	Test solution/*f*	Middle dose from endotoxin standard curve (R_3)	4
R_0	Pyrogen-free saline or test diluent	None (negative control)	4
R_1-R_4	Pyrogen-free saline or test diluent	4 concentrations of standard endotoxin	4 of each concentration

Solution A = Solution of the preparation being examined at the dilution, here designated *f*, at which the test for interfering factors was carried out, i.e. the highest concentration (lowest dilution) for which the endotoxin recovery is within 50-200 per cent.

Solution B = 2-fold dilution of solution A, not exceeding the MVD.

Solution C = 2-fold dilution of solution B, not exceeding the MVD.

Solution D = solution A spiked with standard endotoxin: the middle dose from endotoxin standard curve (R_3).

Solution R_0 = negative control.

Solutions R_1-R_4 = solutions of standard endotoxin at the concentrations used in the test for interfering factors.

7-1-2. **Calculation and interpretation**

All data to be included in the data analysis are to relate to cells for which the 2 criteria for the standard curve are satisfied. The endotoxin equivalents recovery calculated from the endotoxin equivalents concentration found in solution D after subtracting the endotoxin equivalents concentration found in solution A, is within the range of 50-200 per cent. For each different cell source, e.g. individual donation, donor pool, or cell line, use the endotoxin standard curve R_1-R_4 to calculate the concentration of endotoxin equivalents in each of the replicates of solutions A, B and C. The preparation being examined complies with the requirements of the test for a given cell source if the mean concentrations of endotoxin equivalents measured in the replicates of solutions A, B and C, after correction for dilution and concentration, are all less than the CLC specified for the preparation being examined.

7-1-3. **Pass/fail criteria of the preparation**

When cells from individual donors are used, the preparation being examined is required to comply with the test with the cells from each of 4 different donors. If the preparation being examined passes the test with cells from 3 of the 4 donors (1 donor excluded for failing to comply with test performance criteria or showing a positive reaction), the test is continued with cells from a further 4 donors, none of whom provided cells for the 1st test, and the preparation being examined is required to pass the test with cells from 7 of the 8 different donors (i.e. a maximum of 1 positive reaction in 8 donors is allowed). When the source of monocytes consists of cells pooled from a number of individual donors, the preparation being examined is required to pass the test with 1 pool of cells. Where a human monocytic cell line is used for the test, the preparation being examined is required to pass the test with 1 passage of the cell line.

7-2. *METHOD B. SEMI-QUANTITATIVE TEST*

Method B involves a comparison of the preparation being examined with standard endotoxin. The contaminant concentration of the test preparation it to be less than the CLC to pass the test. Solution A must be chosen for the release decision, unless otherwise justified and authorised.

7-2-1. **Test procedure**

Using the validated test method, prepare the solutions shown in Table 2.6.30.-2 and culture 4 replicates of each solution with cells from each of 4 individual donors or a single pool or with cells from 1 passage of a human monocytic cell line.

Table 2.6.30.-2

Solution	Solution	Added endotoxin (IU/mL)	Number of replicates
A	Test solution/*f*	None	4
B	Test solution/f_1	None	4
C	Test solution/f_2	None	4
D	Test solution/*f*	Standard endotoxin at 2 × LOD for the test system	4
E	Test solution/f_1	Standard endotoxin at 2 × LOD for the test system	4
F	Test solution/f_2	Standard endotoxin at 2 × LOD for the test system	4
R_0	Pyrogen-free saline or test diluent	None (negative control)	4
R_1	Pyrogen-free saline or test diluent	Standard endotoxin at 0.5 × LOD for the test system	4

R_2	Pyrogen-free saline or test diluent	Standard endotoxin at 1 × LOD for the test system	4
R_3	Pyrogen-free saline or test diluent	Standard endotoxin at 2 × LOD for the test system	4
R_4	Pyrogen-free saline or test diluent	Standard endotoxin at 4 × LOD for the test system	4

Solution A = solution of the preparation being examined at the dilution, here designated *f*, at which the test for interfering factors was completed.

Solution B = solution of the preparation being examined at a dilution, here designated f_1, not exceeding the MVD, chosen after a review of data from the product-specific validation, e.g. 1:2 × MVD (i.e. a 2-fold dilution above the MVD).

Solution C = solution of the preparation being examined at a dilution, here designated f_2, not exceeding the MVD, chosen after a review of data from the product-specific validation, e.g. MVD.

Solution D = solution A spiked with standard endotoxin at 2 × LOD for the test system (as determined in preparatory testing).

Solution E = solution B spiked with standard endotoxin at 2 × LOD for the test system.

Solution F = solution C spiked with standard endotoxin at 2 × LOD for the test system.

Solution R_0 = negative control.

Solution R_1 = standard endotoxin at 0.5 × LOD for the test system.

Solution R_2 = standard endotoxin at 1 × LOD for the test system.

Solution R_3 = standard endotoxin at 2 × LOD for the test system.

Solution R_4 = standard endotoxin at 4 × LOD for the test system.

7-2-2. **Calculation and interpretation**

All data to be included in the data analysis are to relate to cells for which mean responses to solutions R_0-R_4 increase progressively. The mean response to R_0 may be equal to the mean response to R_1. For each different cell source, e.g. individual donation, donor pool, or cell line, the mean response to solution R_2 is to be greater than a positive cut-off value. Data below this cut-off value are considered negative. If the mean response to R_1 or R_2 exceeds the cut-off value, the response to the solution chosen for the pass/fail decision must be negative (= pass). For each negative solution of the test preparation (A, B and C), the mean response to the corresponding spiked solution (D, E or F respectively) is compared with the mean response to R_3 to determine the percentage spike recovery. The contaminant concentration of the preparation being examined is less than the CLC for a given cell source if the solution of the test preparation designated for the pass/fail-decision and the dilutions below all give negative results and the endotoxin spike recovery is within the range of 50-200 per cent.

7-2-3. **Pass/fail criteria of the preparation**

The criteria are the same as for method A (see 7-1-3).

7-3. *METHOD C: REFERENCE LOT COMPARISON TEST*

Method C involves a comparison of the preparation being examined with a validated reference lot of that preparation. The reference lot is selected according to criteria that have been justified and authorised. The test is intended to be performed in cases where a preparation being examined shows marked interference but cannot be diluted within the MVD to overcome the interference because it contains or is believed to contain non-endotoxin contaminants. Responses to non-endotoxin contaminants may dilute out more rapidly than responses to endotoxin, which makes it necessary to perform the test at a range of dilutions that include minimum dilution. The test procedure is described below and includes an example for the comparison of a test lot with the reference lot.

7-3-1. **Test procedure**

Using the validated test method, prepare the solutions shown in Table 2.6.30.-3 and culture 4 replicates of each solution with cells from each of 4 individual donors or a single pool or with cells from 1 passage of a human monocytic cell line.

Table 2.6.30.-3

Solution	Solution/dilution factor	Number of replicates
A	Solution of reference lot/f_1	4
B	Solution of reference lot/f_2	4
C	Solution of reference lot/f_3	4
D	Solution of test preparation/f_1	4
E	Solution of test preparation/f_2	4
F	Solution of test preparation/f_3	4
G	Positive control (standard endotoxin)	4
R_0	Diluent (negative control)	4

Solutions A, B and C are solutions of the reference lot diluted by the dilution factors, f_1, f_2 and f_3, determined in the test for interfering factors.

Solutions D, E and F are solutions of the preparation being examined diluted by the dilution factors, f_1, f_2 and f_3, determined for the reference lot in the test for interfering factors.

Solution G is the positive test control for the viability of the cells and is a standard endotoxin concentration that gives a clear positive response.

Solution R_0 is the diluent used to dilute the preparation being examined and serves as the test blank.

7-3-2. **Calculation and interpretation**

All data to be included in the data analysis are to relate to cells for which solution G and at least one of solutions A, B and C give a response that is greater than the basal release of the read-out (Solution R_0). For each different cell source, e.g. individual donation, donor pool, or cell line, use the standard curve for the read-out (a calibration curve in duplicate with a blank and at least 4 geometrically diluted concentrations of the standard for the chosen read-out) and calculate the mean responses of the replicates of solutions A-F. Sum the mean responses to solutions A, B and C and sum the mean responses to solutions D, E and F. Divide the sum of the mean responses to solutions D, E and F by the sum of the mean responses to solutions A, B and C. The preparation being examined complies with the test for a given cell source if the resulting value complies with a defined acceptance criterion not exceeding 2.5.

7-3-3. **Pass/fail criteria of the preparation**

The criteria are the same as for method A (see 7-1-3).

To quantify more closely the level of contamination, Methods A, B and C may be performed using other dilutions of the solution of the preparation being examined not exceeding the MVD.

The following section is published for information only.

Guidance notes

1. INTRODUCTION

The monocyte activation test (MAT) is primarily intended to be used as an alternative method to the rabbit pyrogen test. The MAT detects pyrogenic and pro-inflammatory contaminants, including endotoxins from gram-negative bacteria and 'non-endotoxin' contaminants, including pathogen-associated molecular patterns (PAMPs), derived from gram-positive and gram-negative bacteria, viruses and fungi, and product-related and process-related biological or chemical entities.

Since non-endotoxin contaminants are a physico-chemically diverse class of molecules, and usually the nature of the contaminant in a preparation being examined is unknown, the level of contamination is expressed either in endotoxin-equivalent units, derived by comparison with responses to standard endotoxin, or by comparison with a reference lot of the test preparation.

In the MAT, responses to standard endotoxin usually dilute out over approximatively 1 $\log_{10}$ and responses to products contaminated with non-endotoxin contaminants (alone or in combination with endotoxins) often show very steep dose-response curves, usually over only 1 or 2 dilution steps when tested for their capability to stimulate monocytes. Frequently, the largest response to such contaminated products is obtained with undiluted solutions of preparations being examined or small dilutions of the preparations being examined. For this reason test solutions of preparations being examined that contain or may contain non-endotoxin contaminants have to be tested at a range of dilutions that includes minimum dilution.

2. METHODS

2-1. *INFORMATION REGARDING THE CHOICE OF METHODS*

Methods A, B and C, are not normally applied where a test preparation has the intrinsic activity of stimulating the release of the chosen read-out or where the test preparation is contaminated with the chosen read-out. In both cases, this fact is to be addressed by modifying and validating the chosen method accordingly. The product-specific validation of the chosen method would be expected to identify the frequency of non-responders to a particular product/contaminant(s) combination and to identify steps to address this, e.g. screening of donors, increasing the number of donors per test, and setting pass/fail criteria of appropriate stringency to maximise the likelihood of detecting contaminated batches. Methods A and B are appropriate when responses to dilutions of a preparation being examined are broadly parallel to responses to dilutions of standard endotoxin. Method B is a semi-quantitative test that can also be applied when responses to dilutions of a test preparation are not parallel to responses to dilutions of standard endotoxin.

Method C, the reference lot comparison test, was developed to address extreme donor variability in responses to certain product/contaminant(s) combinations. In this regard, it should be noted that, while monocytes from most donors respond in a broadly similar manner to bacterial endotoxin, responses of monocytes from different donors to non-endotoxin contaminants can differ markedly, so that it is possible to identify non-responders to certain product/contaminant(s) combinations.

2-2. *CALCULATION OF CONTAMINANT LIMIT CONCENTRATION*

The acceptance criterion for a pass/fail decision is the contaminant limit concentration (CLC), which is expressed in endotoxin equivalents per milligram or millilitre or in units of biological activity of the preparation being examined.

Where an endotoxin limit concentration (ELC) has been specified for a product, the CLC is the same as the ELC, unless otherwise prescribed. The CLC is expressed in terms of endotoxin equivalents. The CLC is calculated using the following expression:

$$\frac{K}{M}$$

K = threshold pyrogenic dose of endotoxin per kilogram of body mass;

M = maximum recommended bolus dose of product per kilogram of body mass.

When the product is to be injected at frequent intervals or infused continuously, M is the maximum total dose administered in a single hour period.

The endotoxin limits depends on the product and its route of administration and is stated in monographs.

Values for K are suggested in Table 2.6.30.-4.

Table 2.6.30.-4

Route of administration	K (IU of endotoxin per kilogram of body mass)
Intravenous	5.0
Intravenous, for radiopharmaceuticals	2.5
Intrathecal	0.2

For other routes, the acceptance criterion for bacterial endotoxins is generally determined on the basis of results obtained during the development of the preparation.

2-3. *INFORMATION REGARDING CRYO-PROTECTANTS*

The influence of cryo-protectants, e.g. dimethyl sulfoxide (DMSO), and their residues in thawed cells, is to be considered: DMSO is toxic to cells in culture and, even when cells have been washed thoroughly, cryo-preservation may have altered cell properties, e.g. cell membrane permeability.

2-4. *INTERFERENCE TESTING*

Where practicable, interference testing is performed on at least 3 different lots of the preparation being examined. Preparations being examined that show marked batch-to-batch variation, that effectively renders each batch unique for the purposes of interference testing, are to be subjected to interference testing within each individual test, i.e. concomitant validation.

Interference testing is preferably performed on batches of the preparation being examined that are free of endotoxins and other pyrogenic/pro-inflammatory contaminants and, where this is not practicable, none of the batches are to be heavily contaminated. If only 1 batch is available the validation has to be performed on that batch in 3 independent tests. Precision parameters for reproducibility, e.g. ± 50 per cent, are to be fulfilled.

3. REPLACEMENT OF THE RABBIT PYROGEN TEST BY THE MONOCYTE ACTIVATION TEST

As noted above, the monocyte activation test (MAT) is primarily intended to be used as an alternative method to the rabbit pyrogen test. Monographs on pharmaceutical products intended for parenteral administration that may contain pyrogenic contaminants require either a test for bacterial endotoxins or a monocyte activation test.

As a general policy:

- in any individual monograph, when a test is required, only 1 test is included, either that for bacterial endotoxins or the MAT. Before including the MAT in a monograph, evidence is required that 1 of the 3 methods described in the MAT chapter can be applied satisfactorily to the product in question;
- the necessary information is sought from manufacturers. Companies are invited to provide any validation data that they have concerning the applicability of the MAT

to the substances and formulations of interest. Such data include details of sample preparation and of any procedures necessary to eliminate interfering factors. In addition, any available parallel data for rabbit pyrogen testing that would contribute to an assurance that the replacement of a rabbit pyrogen test by the MAT is appropriate, is to be provided.

4. VALIDATION OF ALTERNATIVE METHODS

Replacement of a rabbit pyrogen test by a MAT, or replacement of a method for detecting pro-inflammatory/pyrogenic contaminants by another method, is to be regarded as the use of an alternative method in the replacement of a pharmacopoeial test, as described in the General Notices:

'The test and assays described are the official methods upon which the standards of the European Pharmacopoeia are based. With the agreement of the competent authority, alternative methods of analysis may be used for control purposes, provided that the methods used enable an unequivocal decision to be made as to whether compliance with the standards of the monographs would be achieved if the official methods were used. In the event of doubt or dispute, the methods of analysis of the European Pharmacopoeia are alone authoritative.'

The following procedures are suggested for validating a method for the MAT other than the one indicated in the monograph:

- the procedure and the materials and reagents used in the method should be validated as described for the test concerned;
- the presence of interfering factors (and, if needed, the procedure for removing them) should be tested on samples of at least 3 production batches.

MAT should be applied to all new products intended for parenteral administration that have to be tested for the presence of monocyte-activating contaminants according to the requirements of the European Pharmacopoeia.

01/2014:20631

2.6.31. MICROBIOLOGICAL EXAMINATION OF HERBAL MEDICINAL PRODUCTS FOR ORAL USE AND EXTRACTS USED IN THEIR PREPARATION

1. MICROBIAL ENUMERATION TESTS

Total aerobic microbial count (TAMC). Perform as described in general chapter *2.6.12*.

Total combined yeasts/moulds count (TYMC). Perform as described in general chapter *2.6.12*. Due to the natural high bioburden in the products covered by general chapter *5.1.8*, use of Sabouraud-dextrose agar containing antibiotics is suitable.

2. TEST FOR SPECIFIED MICRO-ORGANISMS

2-1. *INTRODUCTION*

The tests described hereafter will allow determination of the absence or limited occurrence of specified micro-organisms that may be detected under the conditions described.
The tests are designed primarily to determine whether a product, substance or preparation (hereinafter referred to as 'the product') complies with an established specification for microbiological quality. When used for such purposes, follow the instructions given below, including the number of samples to be taken, and interpret the results as stated below.

Alternative microbiological procedures, including automated methods, may be used, provided that their equivalence to the Pharmacopoeia method has been demonstrated.

2-2. *GENERAL PROCEDURES*

The preparation of samples is carried out as described in general chapter *2.6.12*.
If the product to be examined has antimicrobial activity, this is as far as possible removed or neutralised as described in general chapter *2.6.12*.

If surface-active substances are used for sample preparation, their absence of toxicity for micro-organisms and their compatibility with inactivators used must be demonstrated as described in general chapter *2.6.12*.

2-3. *GROWTH-PROMOTING AND INHIBITORY PROPERTIES OF THE MEDIA, SUITABILITY OF THE TEST AND NEGATIVE CONTROLS*

The ability of the test to detect micro-organisms in the presence of the product to be examined must be established. Suitability must be confirmed if a change in testing performance, or the product, which may affect the outcome of the test is introduced.

2-3-1. **PREPARATION OF TEST STRAINS**

Use standardised stable suspensions of test strains or prepare them as stated below. Seed lot culture maintenance techniques (seed-lot systems) are used so that the viable micro-organisms used for inoculation are not more than 5 passages removed from the original master seed lot.

2-3-1-1. **Aerobic micro-organisms**. Grow each of the bacterial test strains separately in casein soya bean digest broth or on casein soya bean digest agar at 30-35 °C for 18-24 h.

- *Staphylococcus aureus* such as ATCC 6538, NCIMB 9518, CIP 4.83 or NBRC 13276;
- *Pseudomonas aeruginosa* such as ATCC 9027, NCIMB 8626, CIP 82.118 or NBRC 13275;
- *Escherichia coli* such as ATCC 8739, NCIMB 8545, CIP 53.126 or NBRC 3972;
- *Salmonella enterica* subsp. *enterica* serovar Typhimurium such as ATCC 14028 or, as an alternative, *S. enterica* subsp. *enterica* serovar Abony such as NBRC 100797, NCTC 6017 or CIP 80.39;
- *Bacillus subtilis* such as ATCC 6633, NCIMB 8054, CIP 52.62 or NBRC 3134.

Use buffered sodium chloride-peptone solution pH 7.0 or phosphate buffer solution pH 7.2 to make test suspensions. Use the suspensions within 2 h, or within 24 h if stored at 2-8 °C. As an alternative to preparing and then diluting a fresh suspension of vegetative cells of *B. subtilis*, a stable spore suspension is prepared and then an appropriate volume is used for test inoculation. The stable spore suspension may be maintained at 2-8 °C for a validated period of time.

2-3-2. **NEGATIVE CONTROL**

To verify testing conditions, a negative control is performed using the chosen diluent in place of the test preparation. There must be no growth of micro-organisms. A negative control is also performed when testing the products as described in section 2-4. A failed negative control requires an investigation.

2-3-3. **GROWTH-PROMOTING AND INHIBITORY PROPERTIES OF THE MEDIA**

Test each batch of ready-prepared medium and each batch of medium prepared either from dehydrated medium or from the ingredients described.

Verify suitable properties of relevant media as described in Table 2.6.31.-1.

Table 2.6.31.-1. – *Growth-promoting, inhibitory and indicative properties of media*

	Medium	Property	Test strains
Test for bile-tolerant gram-negative bacteria	Casein soya bean digest broth	Growth promoting	*S. aureus* *P. aeruginosa* *B. subtilis*
	Enterobacteria enrichment broth-Mossel	Growth promoting	*E. coli* *P. aeruginosa*
		Inhibitory	*S. aureus*
	Violet red bile glucose agar	Growth promoting + indicative	*E. coli* *P. aeruginosa*
Test for *Escherichia coli*	Casein soya bean digest broth	Growth promoting	*S. aureus* *P. aeruginosa* *B. subtilis*
	MacConkey broth	Growth promoting	*E. coli*
		Inhibitory	*S. aureus*
	MacConkey agar	Growth promoting + indicative	*E. coli*
Test for *Salmonella*	Buffered peptone medium	Growth promoting	*S. enterica* subsp. *enterica* serovar Typhimurium or *S. enterica* subsp. *enterica* serovar Abony
	Rappaport Vassiliadis *Salmonella* enrichment broth	Growth promoting	*S. enterica* subsp. *enterica* serovar Typhimurium or *S. enterica* subsp. *enterica* serovar Abony
		Inhibitory	*S. aureus*
	Xylose, lysine, deoxycholate agar	Growth promoting + indicative	*S. enterica* subsp. *enterica* serovar Typhimurium or *S. enterica* subsp. *enterica* serovar Abony

Test for growth-promoting properties, liquid media: inoculate a portion of the appropriate medium with a small number (not more than 100 CFU) of the appropriate micro-organism. Incubate at the specified temperature for not more than the shortest period of time specified in the test. Incubate the casein soya bean digest broth at 30-35 °C for not more than 3 days. Clearly visible growth of the micro-organism comparable to that obtained with a previously tested and approved batch of medium occurs.

Test for growth-promoting properties, solid media: perform the surface-spread method, inoculating each plate with a small number (not more than 100 CFU) of the appropriate micro-organism. Incubate at the specified temperature for not more than the shortest period of time specified in the test. Growth of the micro-organism comparable to that obtained with a previously tested and approved batch of medium occurs.

Test for inhibitory properties, liquid or solid media: inoculate the appropriate medium with at least 100 CFU of the appropriate micro-organism. Incubate at the specified temperature for not less than the longest period of time specified in the test. No growth of the test micro-organism occurs.

Test for indicative properties: perform the surface-spread method, inoculating each plate with a small number (not more than 100 CFU) of the appropriate micro-organism. Incubate at the specified temperature for a period of time within the range specified in the test. Colonies are comparable in appearance and indication reactions to those obtained with a previously tested and approved batch of medium.

2-3-4. **SUITABILITY OF THE TEST METHOD**

For each product to be examined, perform the sample preparation as described in the relevant paragraph in section 2-4. Add each test strain at the time of mixing, in the prescribed growth medium (casein soya bean digest broth or buffered peptone medium). For the enumeration method for bile-tolerant gram-negative bacteria, inoculate *E. coli* and *P. aeruginosa* individually. For the tests for *E. coli* and *Salmonella*, inoculate the specified micro-organism individually.

Any antimicrobial activity of the product necessitates a modification of the test procedure (see section 4-5-3 of general chapter *2.6.12*).

If for a given product the antimicrobial activity with respect to a micro-organism for which testing is prescribed cannot be neutralised, then it is to be assumed that the inhibited micro-organism will not be present in the product.

2-3-4-1. **Test for absence**. Use a number of micro-organisms equivalent to not more than 100 CFU in the inoculated test preparation. Perform the test as described in the relevant paragraph in section 2-4 using the shortest incubation period prescribed. The specified micro-organisms must be detected with the indication reactions as described in section 2-4.

2-3-4-2. **Enumeration test**. Semi-quantitative test (probable-number method).

Use a number of micro-organisms equivalent to not more than 100 CFU per gram or millilitre of product. Perform the test as described in the relevant paragraph in section 2-4 using the shortest incubation period prescribed. The dilution corresponding to 0.1 g or 0.1 mL of product must be positive.

2-4. *TESTING OF PRODUCTS*

2-4-1. **BILE-TOLERANT GRAM-NEGATIVE BACTERIA**

2-4-1-1. **Enumeration test**. Semi-quantitative test (probable-number method).

2-4-1-1-1. *Sample preparation and pre-incubation*. Prepare a sample using a 10-fold dilution of not less than 1 g of the product to be examined as described in general chapter *2.6.12*, but using casein soya bean digest broth as the chosen diluent, mix and incubate at 20-25 °C for a time sufficient to resuscitate the bacteria but not sufficient to encourage multiplication of the organisms (2-3 h).

2-4-1-1-2. *Selection and subculture*. Inoculate suitable quantities of enterobacteria enrichment broth-Mossel with the preparation as described above and/or, depending on the limit applied for the particular product, with 3 of the 4 dilutions of the preparation, which contain respectively 0.1 g, 0.01 g, 0.001 g and 0.0001 g (or 0.1 mL, 0.01 mL, 0.001 mL and 0.0001 mL) of the product to be examined. Incubate at 30-35 °C for 24-48 h. Subculture each of the cultures on a plate of violet red bile glucose agar. Incubate at 30-35 °C for 18-24 h.

2-4-1-1-3. *Interpretation*. Growth of colonies constitutes a positive result. Note the smallest quantity of the product that gives a positive result and the largest quantity that gives a negative result.

Determine from Table 2.6.31.-2 the probable number of bacteria.

Table 2.6.31.-2. – *Interpretation of results*

Results for each quantity of product				Probable number of bacteria per gram or millilitre of product
0.1 g or 0.1 mL	0.01 g or 0.01 mL	0.001 g or 0.001 mL	0.0001 g or 0.0001 mL	
+	+	+	+	$> 10^4$
+	+	+	-	$< 10^4$ and $> 10^3$
+	+	-	-	$< 10^3$ and $> 10^2$
+	-	-	-	$< 10^2$ and > 10
-	-	-	-	< 10

2-4-2. ESCHERICHIA COLI

2-4-2-1. **Test for absence**

2-4-2-1-1. *Sample preparation and pre-incubation.* Prepare a sample using a 10-fold dilution of not less than 1 g of the product to be examined as described in general chapter *2.6.12*, and use 10 mL or the quantity corresponding to 1 g or 1 mL to inoculate a suitable amount (determined as described in section 2-3-4) of casein soya bean digest broth, mix and incubate at 30-35 °C for 18-24 h.

2-4-2-1-2. *Selection and subculture.* Shake the container, transfer 1 mL of casein soya bean digest broth to 100 mL of MacConkey broth and incubate at 42-44 °C for 24-48 h. Subculture on a plate of MacConkey agar at 30-35 °C for 18-72 h.

2-4-2-1-3. *Interpretation.* Growth of colonies indicates the possible presence of *E. coli*. This is confirmed by identification tests.

The product complies with the test if no colonies are present or if the identification tests are negative.

2-4-2-2. **Enumeration test**. Semi-quantitative test (probable-number method).

2-4-2-2-1. *Sample preparation and pre-incubation.* Prepare a sample using a 10-fold dilution of not less than 1 g of the product to be examined as described in general chapter *2.6.12*, and use the quantities corresponding respectively to 0.1 g, 0.01 g and 0.001 g (or 0.1 mL, 0.01 mL and 0.001 mL) to inoculate a suitable amount (determined as described in section 2-3-4) of casein soya bean digest broth, mix and incubate at 30-35 °C for 18-24 h.

2-4-2-2-2. *Selection and subculture.* Shake the container, transfer 1 mL of casein soya bean digest broth to 100 mL of MacConkey broth and incubate at 42-44 °C for 24-48 h. Subculture on a plate of MacConkey agar at 30-35 °C for 18-72 h.

2-4-2-2-3. *Interpretation.* Growth of colonies indicates the possible presence of *E. coli*. This is confirmed by identification tests.

Note the smallest quantity of the product that gives a positive result and the largest quantity that gives a negative result.

Determine from Table 2.6.31.-3 the probable number of bacteria.

Table 2.6.31.-3. – *Interpretation of results*

Results for each quantity of product			Probable number of bacteria per gram or millilitre of product
0.1 g or 0.1 mL	0.01 g or 0.01 mL	0.001 g or 0.001 mL	
+	+	+	> 10^3
+	+	-	< 10^3 and > 10^2
+	-	-	< 10^2 and > 10
-	-	-	< 10

2-4-3. SALMONELLA

2-4-3-1. **Test for absence**

2-4-3-1-1. *Sample preparation and pre-incubation.* Use 25 g or 25 mL of the product to be examined to inoculate 225 mL of buffered peptone medium and mix (e.g. homogenise in a filter bag by using a blender). Incubate at 30-35 °C for 18-24 h.

2-4-3-1-2. *Selection and subculture.* Transfer 0.1 mL of buffered peptone medium to 10 mL of Rappaport Vassiliadis *Salmonella* enrichment broth and incubate at 30-35 °C for 18-24 h. Subculture on plates of xylose, lysine and deoxycholate agar. Incubate at 30-35 °C for 18-48 h.

2-4-3-1-3. *Interpretation.* The possible presence of *Salmonella* is indicated by the growth of well-developed, red colonies, with or without black centres. This is confirmed by identification tests.

The product complies with the test if colonies of the types described are not present or if the identification tests are negative.

The following section is given for information.

RECOMMENDED SOLUTIONS AND CULTURE MEDIA

The solutions and culture media mentioned in this chapter and described in general chapter *2.6.13* and the following buffered peptone medium have been found to be satisfactory for the purposes for which they are prescribed in this chapter. Other media may be used provided that their suitability can be demonstrated.

Buffered peptone medium

Potassium dihydrogen phosphate	1.5 g
Disodium hydrogen phosphate dodecahydrate	9.0 g
Sodium chloride	5.0 g
Peptone	10.0 g
Purified water	1000 mL

Adjust the pH so that after sterilisation it is 7.0 ± 0.2 at 25 °C. Sterilise in an autoclave using a validated cycle.

07/2013:20633

2.6.33. RESIDUAL PERTUSSIS TOXIN AND IRREVERSIBILITY OF PERTUSSIS TOXOID

This test is not necessary for the product obtained by genetic modification.

Pertussis toxin BRP or an in-house toxin preparation calibrated in International Units against the BRP are suitable for use as a reference pertussis toxin preparation.

Mouse strain. A suitable mouse strain has a toxin LD_{50} between 6 IU and 50 IU.

Use equal groups of not fewer than 10 histamine-sensitive mice of suitable strain, age and weight. For the test for residual pertussis toxin, inject intraperitoneally into the 1st group between 1 and 2 human doses of the vaccine stored at 2-8 °C. For the test for irreversibility of pertussis toxoid, inject intraperitoneally into the 2nd group between 1 and 2 human doses of the vaccine incubated at 37 °C for 4 weeks.

The histamine sensitivity criteria must be set during a validation study using multiple doses of a reference toxin; a significant dose-response must be demonstrated. A suitable dose of the reference toxin, chosen in the linear region of the dose-response curve and giving a positive response considered appropriate by the competent authority, is subsequently included in each assay as the positive control to demonstrate assay sensitivity.

The positive control group of mice is injected with an equivalent volume of reference pertussis toxin preparation (e.g. *pertussis toxin BRP*) at a dose that has been defined in the validation stage as demonstrating the assay sensitivity, for example a dose causing death in at least 30 per cent of the mice.

The negative control group of mice is injected intraperitoneally with an equivalent volume of diluent.

If a reference group of mice is used, it may be injected with a reference pertussis toxin preparation (e.g. *pertussis toxin BRP*) at a dose previously set as the allowable upper limit of pertussis toxin in the product according to historical safety data. Alternatively, a reference vaccine with established clinical safety may be used instead of the reference toxin preparation.

After 5 days, inject intraperitoneally into each mouse of each group the equivalent of 2 mg of histamine base in a volume not exceeding 0.5 mL and observe for 24 h. The test is not valid if:

– 1 or more mice in the negative control group die following histamine challenge;

– the histamine sensitivity does not meet the defined limit (e.g. at least 30 per cent of the mice die in the positive control group).

If a reference group is not included in the assay, the vaccine complies with the test for residual pertussis toxin if no mice die in the 1st group. If a vaccine lot fails the test, the test may be repeated once with the same number of mice or with a greater number and the results of the tests combined; the vaccine complies with the test if the percentage of deaths in the group given the vaccine does not exceed 5 per cent. The vaccine complies with the test for irreversibility of pertussis toxoid if the 2nd group, given the vaccine incubated at 37 °C, also complies with these criteria.

If a reference group is included, the vaccine complies with the test for residual pertussis toxin if the percentage of deaths in the 1st group is not greater than that in the reference group. If a vaccine lot fails the test, the test may be repeated once with the same number of mice or with a greater number and the results of the tests combined; the vaccine complies with the test if the percentage of deaths in the groups given the vaccine does not exceed the percentage of deaths in the reference groups. The vaccine complies with the test for irreversibility of pertussis toxoid if the 2nd group, given the vaccine incubated at 37 °C, also complies with these criteria.

Alternatively, after validation, a histamine-sensitisation test based on body temperature measurements as end-points may be used instead of the lethal end-point test in mice.

2.7. BIOLOGICAL ASSAYS

01/2008:20701

2.7.1. IMMUNOCHEMICAL METHODS

Immunochemical methods are based on the selective, reversible and non-covalent binding of antigens by antibodies. These methods are employed to detect or quantify either antigens or antibodies. The formation of an antigen-antibody complex may be detected, and the amount of complex formed may be measured by a variety of techniques. The provisions of this general method apply to immunochemical methods using labelled or unlabelled reagents, as appropriate.

The results of immunochemical methods depend on the experimental conditions and the nature and quality of the reagents used. It is essential to standardise the components of an immunoassay and to use, wherever available, international reference preparations for immunoassays.

The reagents necessary for many immunochemical methods are available as commercial assay kits, that is, a set including reagents (particularly the antigen or the antibody) and materials intended for the *in vitro* estimation of a specified substance as well as instructions for their proper use. The kits are used in accordance with the manufacturers' instructions; it is important to ascertain that the kits are suitable for the analysis of the substance to be examined, with particular reference to selectivity and sensitivity. Guidance concerning immunoassay kits is provided by the World Health Organization, Technical Report Series 658 (1981).

METHODS IN WHICH A LABELLED ANTIGEN OR A LABELLED ANTIBODY IS USED

Methods using labelled substances may employ suitable labels such as enzymes, fluorophores, luminophores and radioisotopes. Where the label is a radioisotope, the method is described as a "radio-immunoassay". The recommendations for the measurement of radioactivity given in the monograph on *Radiopharmaceutical Preparations (0125)* are applicable to immunoassays involving radioisotopes. All work with radioactive materials must be carried out in conformity with national legislation and internationally accepted codes of practice for protection against radiation hazards.

METHODS IN WHICH AN UNLABELLED ANTIGEN OR ANTIBODY IS USED

Immunoprecipitation methods

Immunoprecipitation methods include flocculation and precipitation reactions. When a solution of an antigen is mixed with its corresponding antibody under suitable conditions, the reactants form flocculating or precipitating aggregates. The ratio of the reactants which gives the shortest flocculation time or the most marked precipitation is called the optimal ratio, and is usually produced by equivalent amounts of antigen and antibody. Immunoprecipitation can be assessed visually or by light-scattering techniques (nephelometric or turbidimetric assay). An increase in sensitivity can be obtained by using antigen- or antibody-coated particles (e.g. latex) as reactants.

In flocculation methods, stepwise dilutions of one of the reactants is usually used whereas, in immunodiffusion (ID) methods, the dilution is obtained by diffusion in a gel medium: concentration gradients of one or both of the reactants are obtained, thus creating zones in the gel medium where the ratio of the reactants favours precipitation. While flocculation methods are performed in tubes, immunodiffusion methods may be performed using different supports such as tubes, plates, slides, cells or chambers.

Where the immunoprecipitating system consists of one antigen combining with its corresponding antibody, the system is referred to as *simple*; when it involves related but not serologically identical reactants, the system is *complex* and where several serologically unrelated reactants are involved, the system is *multiple*.

In *simple diffusion methods*, a concentration gradient is established for only one of the reactants diffusing from an external source into the gel medium containing the corresponding reactant at a comparatively low concentration.

Single radial immunodiffusion (SRID) is a simple quantitative immunodiffusion technique. When the equilibrium between the external and the internal reactant has been established, the circular precipitation area, originating from the site of the external reactant, is directly proportional to the amount of the antigen applied and inversely proportional to the concentration of the antibody in the gel.

In *double diffusion methods*, concentration gradients are established for both reactants. Both antigen and antibody diffuse from separate sites into an initially immunologically neutral gel.

Comparative double diffusion methods are used for qualitatively comparing various antigens versus a suitable antibody or vice versa. The comparison is based on the presence or absence of interaction between the precipitation patterns. Reactions of identity, non-identity or partial identity of antigens/antibodies can be distinguished.

Immunoelectrophoretic methods

Immunoelectrophoresis (IE) is a qualitative technique combining 2 methods: gel electrophoresis followed by immunodiffusion.

Crossed immunoelectrophoresis is a modification of the IE method. It is suitable both for qualitative and quantitative analysis. The first part of the procedure is an ordinary gel electrophoresis, after which a longitudinal gel strip, containing the separated fractions to be determined, is cut out and transferred to another plate. The electrophoresis in the second direction is carried out perpendicular to the previous electrophoretic run in a gel containing a comparatively low concentration of antibodies corresponding to the antigens. For a given antibody concentration and gel thickness, the relationship between the area of the respective precipitation peaks and the amount of the corresponding antigen is linear.

Electroimmunoassay, often referred to as *rocket immuno-electrophoresis* is a rapid quantitative method for determining antigens with a charge differing from that of the antibodies or vice versa. The electrophoresis of the antigen to be determined is carried out in a gel containing a comparatively lower concentration of the corresponding antibody. The test material and dilutions of a standard antigen used for calibration are introduced into different wells in the gel. During electrophoresis, migrating peak-shaped precipitation zones originating from the wells are developed. The front of the precipitate becomes stationary when the antigen is no longer in excess. For a given antibody concentration, the relationship between the distance travelled by the precipitate and the amount of antigen applied is linear.

Counter-immunoelectrophoresis is a rapid quantitative method allowing concentration gradients of external antigen and external antibody to be established in an electric field depending on the different charges. Dilutions of a standard for calibration and dilutions of the test material are introduced into a row of wells in a gel and a fixed amount of the corresponding reactant is introduced into an opposite row of wells. The titre of the test material may be determined as the highest dilution showing a precipitation line.

A number of modifications of crossed immunoelectrophoresis and electroimmunoassay methods exist.

Other techniques combine separation of antigens by molecular size and serological properties.

Visualisation and characterisation of immunoprecipitation lines

These may be performed by selective or non-selective stains, by fluorescence, by enzyme or isotope labelling or other relevant techniques. Selective staining methods are usually performed for characterisation of non-protein substances in the precipitates.

In translucent gels such as agar or agarose, the precipitation line becomes clearly visible in the gel, provided that the concentration of each of the reactants is appropriate.

VALIDATION OF THE METHOD

Validation criteria

A quantitative immunochemical method is not valid unless:

1) The antibody or antigen does not significantly discriminate between the test and standard. For a labelled reactant, the corresponding reactant does not significantly discriminate between the labelled and unlabelled compound,

2) The method is not affected by the assay matrix, that is, any component of the test sample or its excipients, which can vary between samples. These may include high concentrations of other proteins, salts, preservatives or contaminating proteolytic activity,

3) The limit of quantitation is below the acceptance criteria stated in the individual monograph,

4) The precision of the assay is such that the variance of the results meets the requirements stated in the individual monographs,

5) The order in which the assay is performed does not give rise to systematic errors.

Validation methods

In order to verify these criteria, the validation design includes the following elements:

1) The assay is performed at least in triplicate,

2) The assay includes at least 3 different dilutions of the standard preparation and 3 dilutions of sample preparations of presumed activity similar to the standard preparation,

3) The assay layout is randomised,

4) If the test sample is presented in serum or formulated with other components, the standard is likewise prepared,

5) The test includes the measurement of non-specific binding of the labelled reactant,

6) For displacement immunoassay:

(a) maximum binding (zero displacement) is determined,

(b) dilutions cover the complete response range from values close to non-specific binding to maximum binding, preferably for both standard and test preparations.

STATISTICAL CALCULATION

To analyse the results, response curves for test and standard may be analysed by the methods described in *5.3. Statistical Analysis of Results of Biological Assays and Tests*.

Significant non-parallelism indicates that the antibody or antigen discriminates between test and standard, and the results are not valid.

In displacement immunoassays, the values for non-specific binding and maximum displacement at high test or standard concentration must not be significantly different. Differences may indicate effects due to the matrix, either inhibition of binding or degradation of tracer.

01/2009:20702 corrected 7.6

2.7.2. MICROBIOLOGICAL ASSAY OF ANTIBIOTICS

The potency of an antibiotic is estimated by comparing the inhibition of growth of sensitive micro-organisms produced by known concentrations of the antibiotic to be examined and a reference substance.

The reference substances used in the assays are substances whose activity has been precisely determined with reference to the corresponding international standard or international reference preparation.

The assay must be designed in a way that will permit examination of the validity of the mathematical model on which the potency equation is based. If a parallel-line model is chosen, the 2 log dose-response (or transformed response) lines of the preparation to be examined and the reference preparation must be parallel; they must be linear over the range of doses used in the calculation. These conditions must be verified by validity tests for a given probability, usually $P = 0.05$. Other mathematical models, such as the slope ratio model, may be used provided that proof of validity is demonstrated.

Unless otherwise stated in the monograph, the confidence limits ($P = 0.95$) of the assay for potency are not less than 95 per cent and not more than 105 per cent of the estimated potency.

Carry out the assay by method A or method B.

A. DIFFUSION METHOD

Liquefy a medium suitable for the conditions of the assay and inoculate it at a suitable temperature, for example 48 °C to 50 °C for vegetative forms, with a known quantity of a suspension of micro-organisms sensitive to the antibiotic to be examined, such that clearly defined zones of inhibition of suitable diameter are produced with the concentrations of the antibiotic used for the assay. Immediately pour into Petri dishes or large rectangular dishes a quantity of the inoculated medium to form a uniform layer 2-5 mm thick. Alternatively, the medium may consist of 2 layers, only the upper layer being inoculated.

Store the dishes so that no appreciable growth or death of the micro-organisms occurs before the dishes are used and so that the surface of the medium is dry at the time of use.

Using the solvent and the buffer solution indicated in Table 2.7.2.-1, prepare solutions of the reference substance and of the antibiotic to be examined having known concentrations and presumed to be of equal activity. Apply the solutions to the surface of the medium, for example, in sterile cylinders of porcelain, stainless steel or other suitable material, or in cavities prepared in the agar. The same volume of solution must be added to each cylinder or cavity. Alternatively, use sterile absorbent paper discs of suitable quality; impregnate the discs with the solutions of the reference substance or the solutions of the antibiotic to be examined and place on the surface of the agar.

In order to assess the validity of the assay, use not fewer than 3 doses of the reference substance and 3 doses of the antibiotic to be examined having the same presumed activity as the doses of the reference substance. It is preferable to use a series of doses in geometric progression. In routine assays when the linearity of the system has been demonstrated over an adequate number of experiments using a three-point assay, a two-point assay may be sufficient, subject to agreement by the competent authority. However, in all cases of dispute, a three-point assay as described above must be applied.

Arrange the solutions on each Petri dish or on each rectangular dish according to a statistically suitable design, except for small Petri dishes that cannot accommodate more than 6 solutions,

arrange the solutions of the antibiotic to be examined and the solutions of the reference substance in an alternate manner to avoid interaction of the more concentrated solutions.

Incubate at a suitable temperature for about 18 h. A period of diffusion prior to incubation, usually 1-4 h, at room temperature or at about 4 °C, as appropriate, may be used to minimise the effects of the variation in time between the application of the solutions and to improve the regression slope.

Measure the diameters with a precision of at least 0.1 mm or the areas of the circular inhibition zones with a corresponding precision and calculate the potency using appropriate statistical methods.

Use in each assay the number of replications per dose sufficient to ensure the required precision. The assay may be repeated and the results combined statistically to obtain the required precision and to ascertain whether the potency of the antibiotic to be examined is not less than the minimum required.

B. TURBIDIMETRIC METHOD

Inoculate a suitable medium with a suspension of the chosen micro-organism having a sensitivity to the antibiotic to be examined such that a sufficiently large inhibition of microbial growth occurs in the conditions of the test. Use a known quantity of the suspension chosen so as to obtain a readily measurable opacity after an incubation period of about 4 h.

Use the inoculated medium immediately after its preparation.

Using the solvent and the buffer solution indicated in Table 2.7.2.-2 prepare solutions of the reference substance and of the antibiotic to be examined having known concentrations presumed to be of equal activity.

In order that the validity of the assay may be assessed, use not fewer than 3 doses of the reference substance and 3 doses of the antibiotic to be examined having the same presumed activity as the doses of the reference substance. It is preferable to use a series of doses in geometric progression. In order to obtain the required linearity, it may be necessary to select from a large number 3 consecutive doses, using corresponding doses for the reference substance and the antibiotic to be examined.

Distribute an equal volume of each of the solutions into identical test-tubes and add to each tube an equal volume of inoculated medium (for example, 1 mL of the solution and 9 mL of the medium). For the assay of tyrothricin add 0.1 mL of the solution to 9.9 mL of inoculated medium.

Prepare at the same time 2 control tubes without antibiotic, both containing the inoculated medium and to one of which is added immediately 0.5 mL of *formaldehyde R*. These tubes are used to set the optical apparatus used to measure the growth.

Place all the tubes, randomly distributed or in a Latin square or randomised block arrangement, in a water-bath or other suitable apparatus fitted with a means of bringing all the tubes rapidly to the appropriate incubation temperature and maintain them at that temperature for 3-4 h, taking precautions to ensure uniformity of temperature and identical incubation time.

After incubation, stop the growth of the micro-organisms by adding 0.5 mL of *formaldehyde R* to each tube or by heat treatment and measure the opacity to 3 significant figures using suitable optical apparatus. Alternatively use a method which allows the opacity of each tube to be measured after exactly the same period of incubation.

Table 2.7.2.-1. – *Diffusion assay*

Antibiotic	**Reference substance**	**Solvent to be used in preparing the stock solution**	**Buffer solution (pH)**	**Micro-organism**	**Medium and final pH (± 0.1 pH unit)**	**Incubation temperature**
Amphotericin B	*Amphotericin B for microbiological assay CRS*	*Dimethyl sulfoxide R*	pH 10.5 (0.2 M)	*Saccharomyces cerevisiae* ATCC 9763 IP 1432-83	F - pH 6.1	35-37 °C
Bacitracin zinc	*Bacitracin zinc CRS*	*0.01 M hydrochloric acid*	pH 7.0 (0.05 M)	*Micrococcus luteus* NCTC 7743 CIP 53.160 ATCC 10240	A - pH 7.0	35-39 °C
Bleomycin sulfate	*Bleomycin sulfate CRS*	*Water R*	pH 6.8 (0.1 M)	*Mycobacterium smegmatis* ATCC 607	G - pH 7.0	35-37 °C
Colistimethate sodium	*Colistimethate sodium CRS*	*Water R*	pH 6.0 (0.05 M)	*Bordetella bronchiseptica* NCTC 8344 CIP 53.157 ATCC 4617	B - pH 7.3	35-39 °C
				Escherichia coli NCIMB 8879 CIP 54.127 ATCC 10536	B - pH 7.3	35-39 °C
Colistin sulfate	*Colistin sulfate for microbiological assay CRS*	*Water R*	pH 6.0 (0.05 M)	*Bordetella bronchiseptica* NCTC 8344 CIP 53.157 ATCC 4617	B - pH 7.3	35-39 °C
				Escherichia coli NCIMB 8879 CIP 54.127 ATCC 10536	B - pH 7.3	35-39 °C

Antibiotic	Reference substance	Solvent to be used in preparing the stock solution	Buffer solution (pH)	Micro-organism	Medium and final pH (± 0.1 pH unit)	Incubation temperature
Framycetin sulfate	*Framycetin sulfate CRS*	*Water R*	pH 8.0 (0.05 M)	*Bacillus subtilis* NCTC 10400 CIP 52.62 ATCC 6633	E - pH 7.9	30-37 °C
				Bacillus pumilus NCTC 8241 CIP 76.18	E - pH 7.9	30-37 °C
Gentamicin sulfate	*Gentamicin sulfate CRS*	*Water R*	pH 8.0 (0.05 M)	*Bacillus pumilus* NCTC 8241 CIP 76.18	A - pH 7.9	35-39 °C
				Staphylococcus epidermidis NCIMB 8853 CIP 68.21 ATCC 12228	A - pH 7.9	35-39 °C
Josamycin	*Josamycin CRS*	*Methanol R* (see the monograph)	pH 5.6	*Bacillus subtilis* CIP 52.62 ATCC 6633 NCTC 10400	A - pH 6.6	35-37 °C
Josamycin propionate	*Josamycin propionate CRS*	*Methanol R* (see the monograph)	pH 5.6	*Bacillus subtilis* CIP 52.62 ATCC 6633 NCTC 10400	A - pH 6.6	35-37 °C
Kanamycin monosulfate Kanamycin acid sulfate	*Kanamycin monosulfate CRS*	*Water R*	pH 8.0 (0.05 M)	*Bacillus subtilis* NCTC 10400 CIP 52.62 ATCC 6633	A - pH 7.9	30-37 °C
				Staphylococcus aureus NCTC 7447 CIP 53.156 ATCC 6538 P	A - pH 7.9	35-39 °C
Neomycin sulfate	*Neomycin sulfate for microbiological assay CRS*	*Water R*	pH 8.0 (0.05 M)	*Bacillus pumilus* NCTC 8241 CIP 76.18	E - pH 7.9	30-37 °C
				Bacillus subtilis NCTC 10400 CIP 52.62 ATCC 6633	E - pH 7.9	30-37 °C
Netilmicin sulfate	*Netilmicin sulfate CRS*	*Water R*	pH 8.0 ± 0.1	*Staphylococcus aureus* ATCC 6538 P CIP 53.156	A - pH 7.9	32-35 °C
Nystatin	*Nystatin CRS*	*Dimethylformamide R*	pH 6.0 (0.05 M) containing 5 per cent *V/V* of *dimethylformamide R*	*Candida tropicalis* CIP 1433-83 NCYC 1393	F - pH 6.0	30-37 °C
				Saccharomyces cerevisiae NCYC 87 CIP 1432-83 ATCC 9763	F - pH 6.0	30-32 °C
Rifamycin sodium	*Rifamycin sodium CRS*	*Methanol R*	pH 7.0 (0.05 M)	*Micrococcus luteus* NCTC 8340 CIP 53.45 ATCC 9341	A - pH 6.6	35-39 °C
Spiramycin	*Spiramycin CRS*	*Methanol R*	pH 8.0 (0.05 M)	*Bacillus subtilis* NCTC 10400 CIP 52.62 ATCC 6633	A - pH 7.9	30-32 °C

Antibiotic	Reference substance	Solvent to be used in preparing the stock solution	Buffer solution (pH)	Micro-organism	Medium and final pH (± 0.1 pH unit)	Incubation temperature
Streptomycin sulfate	*Streptomycin sulfate CRS*	*Water R*	pH 8.0 (0.05 M)	*Bacillus subtilis* NCTC 8236 CIP 1.83 *Bacillus subtilis* NCTC 10400 CIP 52.62 ATCC 6633	A - pH 7.9 A - pH 7.9	30-37 °C 30-37 °C
Teicoplanin	*Teicoplanin CRS*	pH 6.0 (0.05 M)	pH 6.0 (0.05 M)	*Bacillus subtilis* NCTC 10400 CIP 52.62 ATCC 6633	H - pH 7.8-8.0	35-37 °C
Tylosin for veterinary use Tylosin tartrate for veterinary use	*Tylosin CRS*	2.5 per cent *V/V* solution of *methanol R* in *0.1 M phosphate buffer solution pH 7.0 R*	A mixture of 40 volumes of *methanol R* and 60 volumes of *0.1 M phosphate buffer solution pH 8.0 R*	*Micrococcus luteus* NCTC 8340 CIP 53.45 ATCC 9341	A - pH 8.0	32-35 °C
Vancomycin hydrochloride	*Vancomycin hydrochloride CRS*	*Water R*	pH 8.0	*Bacillus subtilis* NCTC 10400 CIP 52.62 ATCC 6633	A - pH 8.0	37-39 °C

Calculate the potency using appropriate statistical methods.

Linearity of the dose-response relationship, transformed or untransformed, is often obtained only over a very limited range. It is this range which must be used in calculating the activity and it must include at least 3 consecutive doses in order to permit linearity to be verified. In routine assays when the linearity of the system has been demonstrated over an adequate number of experiments using a three-point assay, a two-point assay may be sufficient, subject to agreement by the competent authority. However, in all cases of dispute, a three-point assay must be applied.

Use in each assay the number of replications per dose sufficient to ensure the required precision. The assay may be repeated and the results combined statistically to obtain the required precision and to ascertain whether the potency of the antibiotic to be examined is not less than the minimum required.

Table 2.7.2.-2. – *Turbidimetric assay*

Antibiotic	Reference substance	Solvent to be used in preparing the stock solution	Buffer solution (pH)	Micro-organism	Medium and final pH (± 0.1 pH unit)	Incubation temperature
Colistimethate sodium	*Colistimethate sodium CRS*	*Water R*	pH 7.0	*Escherichia coli* NCIMB 8666 CIP 2.83 ATCC 9637	C - pH 7.0	35-37 °C
Colistin sulfate	*Colistin sulfate for microbiological assay CRS*	*Water R*	pH 7.0	*Escherichia coli* NCIMB 8666 CIP 2.83 ATCC 9637	C - pH 7.0	35-37 °C
Framycetin sulfate	*Framycetin sulfate CRS*	*Water R*	pH 8.0	*Staphylococcus aureus* NCTC 7447 CIP 53.156 ATCC 6538 P	C - pH 7.0	35-37 °C
Gentamicin sulfate	*Gentamicin sulfate CRS*	*Water R*	pH 7.0	*Staphylococcus aureus* NCTC 7447 CIP 53.156 ATCC 6538 P	C - pH 7.0	35-37 °C
Gramicidin	*Gramicidin CRS*	*Methanol R*	pH 7.0*	*Enterococcus hirae* CIP 58.55 ATCC 10541 *Staphylococcus aureus* ATCC 6538 P	C - pH 7.0	35-37 °C
	*Addition of a detergent may be necessary to avoid adsorption on the material during the dilutions, for example 0.1 mg/mL of *polysorbate 80 R*					

Antibiotic	Reference substance	Solvent to be used in preparing the stock solution	Buffer solution (pH)	Micro-organism	Medium and final pH (± 0.1 pH unit)	Incubation temperature
Josamycin	*Josamycin CRS*	*Methanol R* (see the monograph)	pH 5.6	*Staphylococcus aureus* CIP 53.156 ATCC 6538 P NCTC 7447	C - pH 8.0	35-37 °C
Josamycin propionate	*Josamycin propionate CRS*	*Methanol R* (see the monograph)	pH 5.6	*Staphylococcus aureus* CIP 53.156 ATCC 6538 P NCTC 7447	C - pH 8.0	35-37 °C
Kanamycin monosulfate Kanamycin acid sulfate	*Kanamycin monosulfate CRS*	*Water R*	pH 8.0	*Staphylococcus aureus* NCTC 7447 CIP 53.156 ATCC 6538 P	C - pH 7.0	35-37 °C
Neomycin sulfate	*Neomycin sulfate for microbiological assay CRS*	*Water R*	pH 8.0	*Staphylococcus aureus* NCTC 7447 CIP 53.156 ATCC 6538 P	C - pH 7.0	35-37 °C
Rifamycin sodium	*Rifamycin sodium CRS*	*Methanol R*	pH 7.0	*Escherichia coli* NCIMB 8879 CIP 54.127 ATCC 10536	C - pH 7.0	35-37 °C
Spiramycin	*Spiramycin CRS*	*Methanol R*	pH 7.0	*Staphylococcus aureus* NCTC 7447 CIP 53.156 ATCC 6538 P	C - pH 7.0	35-37 °C
Streptomycin sulfate	*Streptomycin sulfate CRS*	*Water R*	pH 8.0	*Klebsiella pneumoniae* NCTC 7427 CIP 53.153 ATCC 10031	C - pH 7.0	35-37 °C
Tylosin for veterinary use Tylosin tartrate for veterinary use	*Tylosin CRS*	2.5 per cent *V/V* solution of *methanol R* in *0.1 M phosphate buffer solution pH 7.0 R*	pH 7.0	*Staphylococcus aureus* NCTC 6571 ATCC 9144 CIP 53.154	C - pH 7.0	37 °C
Tyrothricin	*Gramicidin CRS*	*Alcohol R*	*Alcohol R*	*Enterococcus hirae* ATCC 10541	C - pH 7.0	37 °C
Vancomycin hydrochloride	*Vancomycin hydrochloride CRS*	*Water R*	pH 8.0	*Staphylococcus aureus* CIP 53.156 ATCC 6538 P	C - pH 7.0	37-39 °C

The following section is published for information.

Recommended micro-organisms

The following text details the recommended micro-organisms and the conditions of use. Other micro-organisms may be used provided that they are shown to be sensitive to the antibiotic to be examined and are used in appropriate media and appropriate conditions of temperature and pH. The concentrations of the solutions used should be chosen so as to ensure that a linear relationship exists between the logarithm of the dose and the response in the conditions of the test.

Preparation of inocula. *Bacillus cereus* var. *mycoides*; *Bacillus subtilis*; *Bacillus pumilus*. Spore suspensions of the organisms to be used as inocula are prepared as follows.

Grow the organism at 35-37 °C for 7 days on the surface of a suitable medium to which has been added 0.001 g/L of *manganese sulfate R*. Using sterile *water R*, wash off the growth, which consists mainly of spores. Heat the suspension at 70 °C for 30 min and dilute to give an appropriate concentration of spores, usually 10×10^6 to 100×10^6 per millilitre. The spore suspensions may be stored for long periods at a temperature not exceeding 4 °C.

Alternatively, spore suspensions may be prepared by cultivating the organisms in medium C at 26 °C for 4-6 days, then adding, aseptically, sufficient *manganese sulfate R* to give a concentration of 0.001 g/L and incubating for a further 48 h. Examine the suspension microscopically to ensure that adequate spore formation has taken place (about 80 per cent) and centrifuge. Re-suspend the sediment in sterile *water R* to give a concentration of 10×10^6 to 100×10^6 spores per millilitre, and then heat to 70 °C for 30 min. Store the suspension at a temperature not exceeding 4 °C.

Bordetella bronchiseptica. Grow the test organism on medium B at 35-37 °C for 16-18 h. Wash off the bacterial growth with sterile *water R* and dilute to a suitable opacity.

Staphylococcus aureus; *Klebsiella pneumoniae*; *Escherichia coli*; *Micrococcus luteus*; *Staphylococcus epidermidis*. Prepare as described above for *B. bronchiseptica* but using medium A and adjusting the opacity to one which has been shown to produce a satisfactory dose-response relationship in the turbidimetric assay, or to produce clearly defined zones of inhibition of convenient diameter in the diffusion assay, as appropriate.

Saccharomyces cerevisiae; *Candida tropicalis*. Grow the test organism on medium F at 30-37 °C for 24 h. Wash off the growth with a sterile 9 g/L solution of *sodium chloride R*. Dilute to a suitable opacity with the same solution.

Buffer solutions. Buffer solutions having a pH between 5.8 and 8.0 are prepared by mixing 50.0 mL of *0.2 M potassium dihydrogen phosphate R* with the quantity of *0.2 M sodium hydroxide* indicated in Table 2.7.2.-3. Dilute with freshly prepared *distilled water R* to produce 200.0 mL.

Table 2.7.2.-3.

pH	*0.2 M Sodium hydroxide* (mL)
5.8	3.72
6.0	5.70
6.2	8.60
6.4	12.60
6.6	17.80
6.8	23.65
7.0	29.63
7.2	35.00
7.4	39.50
7.6	42.80
7.8	45.20
8.0	46.80

These buffer solutions are used for all microbiological assays shown in Table 2.7.2.-1 with the exception of bleomycin sulfate and amphotericin B.

For bleomycin sulfate, prepare the buffer solution pH 6.8 as follows: dissolve 6.4 g of *potassium dihydrogen phosphate R* and 18.9 g of *disodium hydrogen phosphate R* in *water R* and dilute to 1000 mL with *water R*.

For amphotericin B, prepare the 0.2 M phosphate buffer solution pH 10.5 as follows: dissolve 35 g of *dipotassium hydrogen phosphate R* in 900 mL of *water R*, add 20 mL of *1 M sodium hydroxide* and dilute to 1000.0 mL with *water R*.

Culture media. The following media or equivalent media may be used.

Medium A

Peptone	6 g
Pancreatic digest of casein	4 g
Beef extract	1.5 g
Yeast extract	3 g
Glucose monohydrate	1 g
Agar	15 g
Water	to 1000 mL

Medium B

Pancreatic digest of casein	17 g
Papaic digest of soya bean	3 g
Sodium chloride	5 g
Dipotassium hydrogen phosphate	2.5 g
Glucose monohydrate	2.5 g
Agar	15 g
Polysorbate 80	10 g
Water	to 1000 mL

The polysorbate 80 is added to the hot solution of the other ingredients after boiling, and immediately before adjusting to volume.

Medium C

Peptone	6 g
Beef extract	1.5 g
Yeast extract	3 g
Sodium chloride	3.5 g
Glucose monohydrate	1 g
Dipotassium hydrogen phosphate	3.68 g
Potassium dihydrogen phosphate	1.32 g
Water	to 1000 mL

Medium D

Heart extract	1.5 g
Yeast extract	1.5 g
Peptone-casein	5 g
Glucose monohydrate	1 g
Sodium chloride	3.5 g
Dipotassium hydrogen phosphate	3.68 g
Potassium dihydrogen phosphate	1.32 g
Potassium nitrate	2 g
Water	to 1000 mL

Medium E

Peptone	5 g
Meat extract	3 g
Disodium hydrogen phosphate,12H_2O	26.9 g
Agar	10 g
Water	to 1000 mL

The disodium hydrogen phosphate is added as a sterile solution after sterilisation of the medium.

Medium F

Peptone	9.4 g
Yeast extract	4.7 g
Beef extract	2.4 g
Sodium chloride	10.0 g
Glucose monohydrate	10.0 g
Agar	23.5 g
Water	to 1000 mL

Medium G

Glycerol	10 g
Peptone	10 g
Meat extract	10 g
Sodium chloride	3 g
Agar	15 g
Water	to 1000 mL

pH 7.0 ± 0.1 after sterilisation.

Medium H

Peptone	5.0 g
Agar	15.0 g
Beef extract powder	3.0 g
Water	to 1000 mL

pH 7.8 - 8.0 adjusted with *0.1 M sodium hydroxide*.

01/2008:20704

2.7.4. ASSAY OF HUMAN COAGULATION FACTOR VIII

Human coagulation factor VIII is assayed by its biological activity as a cofactor in the activation of factor X by activated factor IX (factor IXa) in the presence of calcium ions and phospholipid. The potency of a factor VIII preparation is estimated by comparing the quantity necessary to achieve a certain rate of factor Xa formation in a test mixture containing the substances that take part in the activation of factor X, and the quantity of the International Standard, or of a reference preparation calibrated in International Units, required to produce the same rate of factor Xa formation.

The International Unit is the factor VIII activity of a stated amount of the International Standard, which consists of a freeze-dried human coagulation factor VIII concentrate. The equivalence in International Units of the International Standard is stated by the World Health Organization.

Human coagulation factor VIII BRP is calibrated in International Units by comparison with the International Standard.

The chromogenic assay method consists of 2 consecutive steps: the factor VIII-dependent activation of factor X in a coagulation-factor reagent composed of purified components, and the enzymatic cleavage of a chromogenic factor Xa substrate to yield a chromophore that can be quantified spectrophotometrically. Under appropriate assay conditions, there is a linear relation between the rate of factor Xa formation and the factor VIII concentration. The assay is summarised by the following scheme.

Step 1

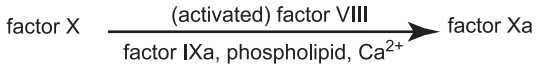

Step 2

Both steps employ reagents that may be obtained commercially from a variety of sources. Although the composition of individual reagents may be subject to some variation, their essential features are described in the following specification. Deviations from this description may be permissible provided that it has been shown, using the International Standard for human blood coagulation factor VIII concentrate as the standard, that the results obtained do not differ significantly.

It is important to demonstrate by validation the suitability of the kit used, notably by checking the time course of factor Xa generation in order to determine the time taken to reach 50 per cent of the maximal factor Xa generation.

REAGENTS

The coagulation factor reagent comprises purified proteins derived from human or bovine sources. These include factor X, factor IXa, and a factor VIII activator, usually thrombin. These proteins are partly purified, preferably to at least 50 per cent, and do not contain impurities that interfere with the activation of factor VIII or factor X. Thrombin may be present in its precursor form prothrombin, provided that its activation in the reagent is sufficiently rapid to give almost instantaneous activation of factor VIII in the assay. Phospholipid may be obtained from natural sources or be synthetically prepared, and must, to a substantial extent, consist of the species phosphatidylserine. The components of the complete reagent are usually divided into at least 2 separate reagents, each lacking the ability to generate factor Xa on its own. One of the reagents contains calcium ions. After reconstitution, the reagents may be combined provided that no substantial amounts of factor Xa are generated in the absence of factor VIII. In the final incubation mixture, factor VIII must be the only rate-limiting component.

The 2nd step comprises the quantification of the formed factor Xa, employing a chromogenic substrate that is specific for factor Xa. Generally this consists of a derivatised short peptide of between 3 and 5 amino acids, joined to a chromophore group. On cleavage of this group from the peptide substrate, its chromophoric properties shift to a wavelength allowing its spectrophotometric quantification. The substrate must also contain appropriate inhibitors to stop further factor Xa generation, e.g. chelating agents, and to suppress thrombin activity.

ASSAY PROCEDURE

Reconstitute the entire contents of 1 ampoule of the reference preparation and of the preparation to be examined; use immediately. Add sufficient prediluent to the reconstituted preparations to produce solutions containing 0.5-2.0 IU/mL.

The prediluent consists of haemophilia A plasma, or of an artificially prepared reagent that contains sufficient von Willebrand factor and that gives results that do not differ significantly from those obtained employing haemophilia plasma. The prediluted materials must be stable beyond the time required for the assay.

Prepare further dilutions of the reference and test preparations using a non-chelating, appropriately buffered solution, for example, tris(hydroxymethyl)aminomethane or imidazole, containing 1 per cent of human or bovine albumin. Prepare at least 2 dilution series of at least 3 further dilutions for each material. Prepare the dilutions such that the final factor VIII concentration in the reaction mixture is preferably below 0.01 IU/mL, during the step of factor Xa generation.

Prepare a control solution that includes all components except factor VIII.

Prepare all dilutions in plastic tubes and use immediately.

Step 1. Mix prewarmed dilutions of the factor VIII reference preparation and of the preparation to be examined with an appropriate volume of the prewarmed coagulation factor reagent or a combination of its separate constituents, and incubate the mixture in plastic tubes or microplate wells at 37 °C. Allow the activation of factor X to proceed for a suitable time, terminating the reaction (step 2) when the factor Xa concentration has reached approximately 50 per cent of the maximal (plateau) level. Appropriate activation times are usually between 2 min and 5 min.

Step 2. Terminate the activation by addition of a prewarmed reagent containing a chromogenic substrate. Quantify the rate of substrate cleavage, which must be linear with the concentration of factor Xa formed, by measuring the absorbance change at an appropriate wavelength using a spectrophotometer, either monitoring the absorbance continuously, thus allowing the initial rate of substrate cleavage to be calculated, or terminating the hydrolysis reaction after a suitable interval by lowering the pH by addition of a suitable reagent, such as a 50 per cent *V/V* solution of acetic acid, or a 1 M pH 3 citrate buffer solution. Adjust the hydrolysis time to achieve a linear development of chromophore over time. Appropriate hydrolysis times are usually between 3 min and 15 min, but deviations are permissible if better linearity of the dose-response relationship is thus obtained.

Calculate the potency of the test preparation by the usual statistical methods (for example, *5.3*).

01/2008:20705

2.7.5. ASSAY OF HEPARIN

The anticoagulant activity of heparin is determined *in vitro* by comparing its ability in given conditions to delay the clotting of recalcified citrated sheep plasma with the same ability of a reference preparation of heparin calibrated in International Units.

The International Unit is the activity contained in a stated amount of the International Standard, which consists of a quantity of freeze-dried heparin sodium from pork intestinal mucosa. The equivalence in International Units of the International Standard is stated by the World Health Organization.

Heparin sodium BRP is calibrated in International Units by comparison with the International Standard by means of the assay given below.

Carry out the assay using one of the following methods for determining the onset of clotting and using tubes and other equipment appropriate to the chosen method:

a) direct visual inspection, preferably using indirect illumination and viewing against a matt black background;

b) spectrophotometric recording of the change in optical density at a wavelength of approximately 600 nm;

c) visual detection of the change in fluidity on manual tilting of the tubes;

d) mechanical recording of the change in fluidity on stirring, care being taken to cause the minimum disturbance of the solution during the earliest phase of clotting.

ASSAY PROCEDURE

The volumes in the text are given as examples and may be adapted to the apparatus used provided that the ratios between the different volumes are respected.

Dilute *heparin sodium BRP* with a 9 g/L solution of *sodium chloride R* to contain a precisely known number of International Units per millilitre and prepare a similar solution of the preparation to be examined which is expected to have the same activity. Using a 9 g/L solution of *sodium chloride R*, prepare from each solution a series of dilutions in geometric progression such that the clotting time obtained with the lowest concentration is not less than 1.5 times the blank recalcification time, and that obtained with the highest concentration is such as to give a satisfactory log dose-response curve, as determined in a preliminary test.

Place 12 tubes in a bath of iced water, labelling them in duplicate: T_1, T_2 and T_3 for the dilutions of the preparation to be examined and S_1, S_2 and S_3 for the dilutions of the reference preparation. To each tube add 1.0 mL of thawed *plasma substrate R1* and 1.0 mL of the appropriate dilution of the preparation to be examined or the reference preparation. After each addition, mix but do not allow bubbles to form. Treating the tubes in the order S_1, S_2, S_3, T_1, T_2, T_3, transfer each tube to a water-bath at 37 °C, allow to equilibrate at 37 °C for about 15 min and add to each tube 1 mL of a suitable APTT (Activated Partial Thromboplastin Time) reagent containing phospholipid and a contact activator, at a dilution giving a suitable blank recalcification time not exceeding 60 s. After exactly 2 min add 1 mL of a 3.7 g/L solution of *calcium chloride R* previously heated to 37 °C and record as the clotting time the interval in seconds between this last addition and the onset of clotting determined by the chosen technique. Determine the blank recalcification time at the beginning and at the end of the procedure in a similar manner, using 1 mL of a 9 g/L solution of *sodium chloride R* in place of one of the heparin dilutions; the 2 blank values obtained should not differ significantly. Transform the clotting times to logarithms, using the mean value for the duplicate tubes.

Repeat the procedure using fresh dilutions and carrying out the incubation in the order T_1, T_2, T_3, S_1, S_2, S_3. Calculate the results by the usual statistical methods (*5.3*).

Carry out not fewer than 3 independent assays. For each such assay prepare fresh solutions of the reference preparation and the preparation to be examined and use another, freshly thawed portion of plasma substrate.

Calculate the potency of the preparation to be examined, combining the results of these assays, by the usual statistical methods (*5.3*). When the variance due to differences between assays is significant at $P = 0.01$, a combined estimate of potency may be obtained by calculating the non-weighted mean of potency estimates.

01/2008:20706
corrected 6.0

2.7.6. ASSAY OF DIPHTHERIA VACCINE (ADSORBED)

The potency of diphtheria vaccine is determined by administration of the vaccine to guinea-pigs followed either by challenge with diphtheria toxin (method A or B) or by determination of the titre of antibodies against diphtheria toxin or toxoid in the serum of guinea-pigs (method C). In both cases, the potency of the vaccine is calculated by comparison with a reference preparation, calibrated in International Units.

The International Unit is the activity contained in a stated amount of the International Standard, which consists of a quantity of diphtheria toxoid adsorbed on aluminium hydroxide. The equivalence in International Units of the International Standard is stated by the World Health Organization (WHO).

Diphtheria vaccine (adsorbed) BRP is suitable for use as a reference preparation.

The method chosen for the assay of diphtheria vaccine (adsorbed) depends on the intended purpose. Method A or B is used:

1. during development of a vaccine, to assay batches produced to validate the production;
2. wherever revalidation is needed following a significant change in the manufacturing process.

Method A or B may also be used for the routine assay of batches of vaccine, but in the interests of animal welfare, method C is used wherever possible.

Method C may be used, except as specified under 1 and 2 above, after verification of the suitability of the method for the product. For this purpose, a suitable number of batches (usually 3) are assayed by method C and method A or B. Where different vaccines (monovalent or combinations) are prepared from diphtheria toxoid of the same origin, and with comparable levels (expressed in Lf/mL) of the same diphtheria toxoid, suitability demonstrated for the combination with the highest number of components can be assumed to be valid for combinations with fewer components and for monovalent vaccines. Any combinations containing a whole-cell pertussis component or containing haemophilus type b conjugate vaccine with diphtheria toxoid or CRM 197 diphtheria protein as carrier in the same vial must always be assessed separately.

For combinations containing diphtheria and tetanus components, the serological assay (method C) can be performed with the same group of animals used for the serological assay of the tetanus vaccine (adsorbed) (*2.7.8*) when the common immunisation conditions for the diphtheria and the tetanus components (for example, doses, duration) have been demonstrated to be valid for the combined vaccine.

The design of the assays described below uses multiple dilutions for the test and reference preparations. Once the analyst has sufficient experience with this method for a given

vaccine, it is possible to apply a simplified model such as a single dilution for both test and reference preparations. Such a model enables the analyst to determine whether the potency of the test preparation is significantly higher than the minimum required, but does not give information on linearity, parallelism and the dose-response curve. The simplified model allows for a considerable reduction in the number of animals required and must be considered by each analyst in accordance with the provisions of the European Convention for the Protection of Vertebrate Animals Used for Experimental and Other Scientific Purposes.

Where a single-dilution assay is used, production and test consistency over time are monitored via suitable indicators and by carrying out a full multiple-dilution assay periodically, for example every 2 years. For serological assays, suitable indicators to monitor test consistency are:

- the mean and standard deviation of relative antitoxin titres or scores of the serum samples obtained after administration of a fixed dose of the vaccine reference preparation;
- the antitoxin titres or scores of run controls (positive and negative serum samples);
- the ratio of antitoxin titres or scores for the positive serum control to the serum samples corresponding to the reference vaccine.

METHOD A: INTRADERMAL CHALLENGE TEST IN GUINEA-PIGS

SELECTION AND DISTRIBUTION OF THE TEST ANIMALS

Use in the test healthy, white guinea-pigs from the same stock and of a size suitable for the prescribed number of challenge sites, the difference in body mass between the heaviest and the lightest animal being not greater than 100 g. Use guinea-pigs of the same sex or with males and females equally distributed between the groups. Distribute the guinea-pigs in not fewer than 6 equal groups; use groups containing a number of animals sufficient to obtain results that fulfil the requirements for a valid assay prescribed below. If the challenge toxin to be used has not been shown to be stable or has not been adequately standardised, include 5 guinea-pigs as unvaccinated controls.

SELECTION OF THE CHALLENGE TOXIN

Select a preparation of diphtheria toxin containing 67 to 133 lr/100 in 1 Lf and 25 000 to 50 000 minimal reacting doses for guinea-pig skin in 1 Lf. If the challenge toxin preparation has been shown to be stable, it is not necessary to verify the activity for every assay.

PREPARATION OF THE CHALLENGE TOXIN SOLUTION

Immediately before use, dilute the challenge toxin with a suitable diluent to obtain a challenge toxin solution containing about 0.0512 Lf in 0.2 mL. Prepare from this a further series of 5 four-fold dilutions containing about 0.0128, 0.0032, 0.0008, 0.0002 and 0.00005 Lf in 0.2 mL.

DILUTION OF THE TEST AND REFERENCE PREPARATIONS

Using a 9 g/L solution of *sodium chloride R*, prepare dilutions of the vaccine to be examined and of the reference preparation, such that for each, the dilutions form a series differing by not more than 2.5-fold steps and in which the intermediate dilutions, when injected subcutaneously at a dose of 1.0 mL per guinea-pig, will result in an intradermal score of approximately 3 when the animals are challenged.

IMMUNISATION AND CHALLENGE

Allocate the dilutions, 1 to each of the groups of guinea-pigs, and inject subcutaneously 1.0 mL of each dilution into each guinea-pig in the group to which that dilution is allocated. After 28 days, shave both flanks of each guinea-pig and inject 0.2 mL of each of the 6 toxin dilutions intradermally into 6 separate sites on each of the vaccinated guinea-pigs in such a way as to minimise interference between adjacent sites.

DETERMINATION OF THE ACTIVITY OF THE CHALLENGE TOXIN

If necessary, inject the unvaccinated control animals with dilutions containing 80, 40, 20, 10 and 5×10^{-6} Lf of the challenge toxin.

READING AND INTERPRETATION OF RESULTS

Examine all injection sites 48 h after injection of the challenge toxin and record the incidence of specific diphtheria erythema. Record also the number of sites free from such reactions as the intra-dermal challenge score. Tabulate the intradermal challenge scores for all the animals receiving the same dilution of vaccine and use those data with a suitable transformation, such as $(\text{score})^2$ or arcsin $((\text{score}/6)^2)$, to obtain an estimate of the relative potency for each of the test preparations by parallel-line quantitative analysis.

REQUIREMENTS FOR A VALID ASSAY

The test is not valid unless:

- for both the vaccine to be examined and the reference preparation, the mean score obtained at the lowest dose level is less than 3 and the mean score at the highest dose level is more than 3;
- where applicable, the toxin dilution that contains 40×10^{-6} Lf gives a positive erythema in at least 80 per cent of the control guinea-pigs and the dilution containing 20×10^{-6} Lf gives a positive erythema in less than 80 per cent of the guinea-pigs (if these criteria are not met a different toxin has to be selected);
- the confidence limits ($P = 0.95$) are not less than 50 per cent and not more than 200 per cent of the estimated potency;
- the statistical analysis shows no deviation from linearity and parallelism.

The test may be repeated but when more than 1 test is performed the results of all valid tests must be combined in the estimate of potency.

METHOD B: LETHAL CHALLENGE TEST IN GUINEA-PIGS

SELECTION AND DISTRIBUTION OF THE TEST ANIMALS

Use in the test healthy guinea-pigs from the same stock, each weighing 250-350 g. Use guinea-pigs of the same sex or with males and females equally distributed between the groups. Distribute the guinea-pigs in not fewer than 6 equal groups; use groups containing a number of animals sufficient to obtain results that fulfil the requirements for a valid assay prescribed below. If the challenge toxin to be used has not been shown to be stable or has not been adequately standardised, include 4 further groups of 5 guinea-pigs as unvaccinated controls.

SELECTION OF THE CHALLENGE TOXIN

Select a preparation of diphtheria toxin containing not less than 100 LD_{50} per millilitre. If the challenge toxin preparation has been shown to be stable, it is not necessary to verify the lethal dose for every assay.

PREPARATION OF THE CHALLENGE TOXIN SOLUTION

Immediately before use, dilute the challenge toxin with a suitable diluent to obtain a challenge toxin solution containing approximately 100 LD_{50} per millilitre. If necessary, use portions of the challenge toxin solution diluted 1 to 32, 1 to 100 and 1 to 320 with the same diluent.

DILUTION OF THE TEST AND REFERENCE PREPARATIONS

Using a 9 g/L solution of *sodium chloride R*, prepare dilutions of the vaccine to be examined and of the reference preparation, such that for each, the dilutions form a series differing by not more than 2.5-fold steps and in which the intermediate dilutions, when injected subcutaneously at a dose of 1.0 mL per guinea-pig, protect approximately 50 per cent of the animals from the lethal effects of the subcutaneous injection of the quantity of diphtheria toxin prescribed for this test.

IMMUNISATION AND CHALLENGE

Allocate the dilutions, 1 to each of the groups of guinea-pigs, and inject subcutaneously 1.0 mL of each dilution into each guinea-pig in the group to which that dilution is allocated. After 28 days, inject subcutaneously into each animal 1.0 mL of the challenge toxin solution (100 LD_{50}).

DETERMINATION OF THE ACTIVITY OF THE CHALLENGE TOXIN

If necessary, allocate the challenge toxin solution and the 3 dilutions made from it, 1 to each of the 4 groups of 5 guinea-pigs, and inject subcutaneously 1.0 mL of each solution into each guinea-pig in the group to which that solution is allocated.

READING AND INTERPRETATION OF RESULTS

Count the number of surviving guinea-pigs 4 days after injection of the challenge toxin. Calculate the potency of the vaccine to be examined relative to the potency of the reference preparation on the basis of the proportion of animals surviving in each of the groups of vaccinated guinea-pigs, using the usual statistical methods (for example, *5.3*).

REQUIREMENTS FOR A VALID ASSAY

The test is not valid unless:

- for both the vaccine to be examined and the reference preparation, the 50 per cent protective dose lies between the largest and smallest doses of the preparations given to the guinea-pigs;
- where applicable, the number of animals that die in the 4 groups of 5 injected with the challenge toxin solution and its 3 dilutions indicates that the challenge dose was approximately 100 LD_{50};
- the confidence limits ($P = 0.95$) are not less than 50 per cent and not more than 200 per cent of the estimated potency;
- the statistical analysis shows no deviation from linearity and parallelism.

The test may be repeated but when more than 1 test is performed the results of all valid tests must be combined in the estimate of potency.

METHOD C. DETERMINATION OF ANTIBODIES IN GUINEA-PIGS

SELECTION AND DISTRIBUTION OF THE TEST ANIMALS

Use in the test healthy guinea-pigs from the same stock, each weighing 250-350 g. Use guinea-pigs of the same sex or with males and females equally distributed between the groups. Distribute the guinea-pigs in not fewer than 6 equal groups; use groups containing a number of animals sufficient to obtain results that fulfil the requirements for a valid assay prescribed below. Use a further group of non-vaccinated guinea-pigs of the same origin to provide a negative serum control. If test consistency has been demonstrated, a reference negative serum control may be used.

REFERENCE PREPARATION

Use a suitable reference preparation such as *diphtheria vaccine (adsorbed) BRP* or a batch of vaccine shown to be effective in clinical studies, or a batch representative thereof, and which has been calibrated in International Units with reference to *diphtheria vaccine (adsorbed) BRP* or the International Standard for diphtheria toxoid (adsorbed).

DILUTION OF THE TEST AND REFERENCE PREPARATIONS

Using a 9 g/L solution of *sodium chloride R* as diluent, prepare serial dilutions of the vaccine to be examined and the reference preparation; series differing by 2.5- to 5-fold steps have been found to be suitable. Use not fewer than 3 dilutions within the range of, for example, 0.5-16 IU/mL for the reference vaccine and within the range of, for example, 1:2 to 1:125 for the vaccine to be examined. Use the dilutions for immunisation preferably within 1 h of preparation. Allocate 1 dilution to each group of guinea-pigs.

IMMUNISATION

Inject subcutaneously to each guinea-pig 1.0 mL of the dilution allocated to its group.

BLOOD SAMPLING

35-42 days after immunisation, take a blood sample from each vaccinated and control guinea-pig using a suitable method.

PREPARATION OF SERUM SAMPLES

Avoid frequent freezing and thawing of serum samples. To avoid microbial contamination, it is preferable to carry out manipulations in a laminar-flow cabinet.

DETERMINATION OF ANTIBODY TITRE

Determine the relative antibody titre or score of each serum sample by a suitable immunochemical method (*2.7.1*). The methods shown below (enzyme-linked immunosorbent assay (ELISA) and Vero cell assay) have been found to be suitable.

CALCULATION OF POTENCY

Calculate the potency of the vaccine to be examined in International Units relative to the reference preparation, using the usual statistical methods (for example, *5.3*).

REQUIREMENTS FOR A VALID ASSAY

The test is not valid unless:

- the confidence limits ($P = 0.95$) are not less than 50 per cent and not more than 200 per cent of the estimated potency;
- the statistical analysis shows a significant slope and no deviation from linearity and parallelism of the dose-response curves (chapter *5.3* describes possible alternatives if significant deviations are observed).

The test may be repeated but when more than 1 test is performed the results of all valid tests must be combined in the estimate of potency.

The following section is published for information.

Assay of diphtheria vaccine (adsorbed): guidelines

METHOD C. DETERMINATION OF ANTIBODIES IN GUINEA-PIGS

PREPARATION OF SERUM SAMPLES

For the preparation of serum samples, the following technique has been found to be suitable. Invert the tubes containing blood samples 6 times and allow to stand at 37 °C for 2 h, then at 4 °C for 2 h. Centrifuge at room temperature at 800 *g* for 20 min. Transfer the serum to sterile tubes and store at a temperature below – 20 °C. At least a 40 per cent yield of serum is obtained by this procedure.

DETERMINATION OF ANTIBODY TITRE

The ELISA and Vero cell assays shown below are given as examples of immunochemical methods that have been found to be suitable for the determination of antibody titre.

Determination of antibody titre in guinea-pig serum by enzyme-linked immunosorbent assay (ELISA). Dilutions of test and reference sera are made on ELISA plates coated with diphtheria toxoid. A positive guinea-pig serum control and a negative guinea-pig serum control are included on each plate to monitor the assay performance. Peroxidase-conjugated rabbit or goat antibody directed against guinea-pig-IgG is added, followed by a peroxidase substrate. Optical density is measured and the relative antibody titre is calculated using the usual statistical methods (for example, *5.3*).

Reagents and equipment

- *ELISA plates*: 96 wells, columns 1-12, rows A-H.
- *Diphtheria guinea-pig antiserum (for vaccines-human use)* (positive control serum), obtained by immunisation of guinea-pigs using *diphtheria vaccine (adsorbed) BRP*.
- *Peroxidase conjugate*. Peroxidase-conjugated rabbit or goat antibody directed against guinea-pig IgG.
- *Diphtheria toxoid*.

- *Carbonate coating buffer pH 9.6.* Dissolve 1.59 g of *anhydrous sodium carbonate R* and 2.93 g of *sodium hydrogen carbonate R* in 1000 mL of *water R*. Distribute into 150 mL bottles and sterilise by autoclaving at 121 °C for 15 min.
- *Phosphate-buffered saline pH 7.4 (PBS).* Dissolve with stirring 80.0 g of *sodium chloride R*, 2.0 g of *potassium dihydrogen phosphate R*, 14.3 g of *disodium hydrogen phosphate dihydrate R* and 2.0 g of *potassium chloride R* in 1000 mL of *water R*. Store at room temperature to prevent crystallisation. Dilute to 10 times its volume with *water R* before use.
- *Citric acid solution.* Dissolve 10.51 g of *citric acid R* in 1000 mL of *water R* and adjust the solution to pH 4.0 with a 400 g/L solution of *sodium hydroxide R*.
- *Washing buffer.* PBS containing 0.5 g/L of *polysorbate 20 R*.
- *Diluent blocking buffer.* PBS containing 0.5 g/L of *polysorbate 20 R* and 25 g/L of dried skimmed milk.
- *Peroxidase substrate.* Shortly before use, dissolve 10 mg of *diammonium 2,2′-azinobis(3-ethylbenzothiazoline-6-sulfonate) R* (ABTS) in 20 mL of citric acid solution. Immediately before use add 5 µL of *strong hydrogen peroxide solution R*.

Method

The description below is given as an example of a suitable plate layout but others may be used. Wells 1A-H are for negative control serum and wells 2A-H and 12A-H are for positive control serum for assay monitoring. Wells 3-11A-H are for test samples.

Coat each well of the ELISA plates with 100 µL of diphtheria toxoid solution (0.5 Lf/mL in carbonate coating buffer pH 9.6). Allow to stand overnight at 4 °C in a humid atmosphere. To avoid temperature gradient effects, do not stack more than 4 plates high. On the following day, wash the plates thoroughly with washing buffer. Block the plates by addition of 100 µL of diluent block buffer to each well. Incubate in a humid atmosphere at 37 °C for 1 h. Wash the plates thoroughly with washing buffer. Place 100 µL of diluent block buffer in each well of the plates, except those of row A. Prepare suitable dilutions of negative control serum, positive control serum (from about 0.01 IU/mL) and test sera. Allocate the negative control serum to column 1, positive control serum to columns 2 and 12 and test sera to columns 3-11 and add 100 µL of each serum to the first 2 wells of the column to which it is allocated. Using a multichannel micropipette, make twofold serial dilutions from row B, down the plate to row H, by transferring 100 µL from one well to the next well. Discard 100 µL from the last row so that all wells contain 100 µL. Incubate at 37 °C for 2 h. Wash thoroughly with washing buffer. Prepare a suitable dilution (a 2000-fold dilution has been found to be suitable) of peroxidase conjugate in diluent block buffer and add 100 µL to each well. Incubate at 37 °C in a humid atmosphere for 1 h. Wash the plates thoroughly with washing buffer. Add 100 µL of peroxidase substrate to each well. Allow to stand at room temperature, protected from light, for 30 min. Read the plates at 405 nm in the same order as addition of substrate was made.

Determination of antibody titre in guinea-pig serum by Vero cell assay. The method used relies either on metabolic inhibition (method 1) or on cytotoxicity (method 2) as the end point, and on either microscopic (cell morphology) or visual (colour) inspection of the cells.

The limit of detection is specific for each antitoxin and is usually between 0.015 IU/mL (method 1) and 0.05 IU/mL (method 2).

The endpoint is taken as the highest serum dilution protecting cells from the diphtheria toxin effect. The antitoxin activity is calculated with respect to guinea-pig or WHO reference standard, and expressed in International Units per millilitre.

Reagents and equipment

- *Flat-bottomed tissue culture plates*: 96 wells, columns 1-12, rows A-H.
- *75 cm² tissue culture flasks.*
- *Diphtheria toxin.*
- *Diphtheria guinea-pig antiserum (for vaccines-human use)* (positive control serum), obtained by immunisation of guinea-pigs with *diphtheria vaccine (adsorbed) BRP*.
- *Vero cells* (African Green Monkey kidney cells). Cell passages from P2 to P15 are suitable for use.

Method 1. The diphtheria toxin causes a cytopathogenic effect on Vero cells leading to cellular lysis. Antibodies directed against diphtheria toxin may inhibit this cytopathogenic effect. Consequently, the potency of a diphtheria vaccine may be indirectly determined with the help of this cell culture system if different serum dilutions from immunised animals are cultured with a constant toxin concentration. In the Vero cell assay, yellow colour indicates viable cells, red colour dead cells. When only part of the cells are dead, the colour may be orange.

Reagents and equipment

- *Modified MEM.* Minimum Essential Medium (MEM) with Earle's Salts, without L-glutamine and sodium bicarbonate.
- *Modified medium 199.* Medium 199, with Hanks' Solution and L-glutamine, without sodium bicarbonate.
- *Foetal bovine serum.*
- *Sodium bicarbonate 7.5 per cent solution.*
- *Trypsin solution:* trypsin 2.5 per cent solution.
- *EDTA solution:* EDTA 0.02 per cent (Versene 1:5000) solution.
- *Modified D-PBS.* Dulbecco's phosphate buffered saline (D-PBS), without calcium, or magnesium.
- *L-glutamine 200mM solution.*
- *Penicillin/streptomycin solution.*
- *Primary culture medium.* To 50 mL of modified MEM add 440 mL of *water R*, 5 mL of L-glutamine 200 mM solution, and 10 mL of sodium bicarbonate 7.5 per cent solution. To 25 mL of this medium add 1.25 mL of foetal bovine serum.
- *Maintenance culture medium.* Similar to the primary culture medium except that 0.5 mL instead of 1.25 mL of foetal bovine serum is added to 20 mL of the enriched MEM medium.
- *Medium A.* To 50.0 mL of modified medium 199 add 440.0 mL of *water R*, 5.0 mL of L-glutamine 200 mM solution and 10.0 mL of sodium bicarbonate 7.5 per cent solution.
- *Medium B.* To 150.0 mL of medium A add 3.0 mL of foetal bovine serum and 0.3 mL of penicillin/streptomycin solution.
- *Medium C.* To 22.0 mL of medium A add 0.44 mL of foetal bovine serum and 0.44 mL of penicillin/streptomycin solution.

Vero cells are cultured in tissue culture flasks (for example 75 cm²/250 mL) in an incubator at 36 ± 1 °C, 5 per cent CO_2 and 90 per cent relative humidity. Vero cells are first grown in the primary culture medium. After 2-3 days of growth, the primary culture medium is replaced by the maintenance culture medium. When a confluent monolayer is obtained, the culture supernatant is discarded and the cell layer washed gently with modified D-PBS. Add a mixture of 1 volume of trypsin solution and 1 volume of EDTA solution to the flask. Swirl the flask gently and incubate in the CO_2 incubator for about 3 min until the cells start to break from the monolayer. Vigorously tap the side of the flask to make the cells fall. Resuspend the cells in 5-6 mL of fresh medium C to obtain a homogeneous suspension. Prepare a cell suspension in medium C containing approximately 1×10^5 cells/mL.

Place 25 µL of medium B in each well except those of column 1. Place 25 µL of the diphtheria guinea-pig antiserum (for vaccines-human use) (positive control serum, working dilution in medium B of 0.40 IU/mL) in wells A1, A2 and A11. Place 25 µL of guinea-pig serum samples in wells B-G of columns 1, 2 and 11. Place 25 µL of negative control serum in row H of columns 1, 2 and 11. Using a multichannel micropipette, make twofold serial dilutions across the plate (from column 2 up to column 10 for rows A-G and up to column 8 for row H). Discard 25 µL from the wells in column 10 in rows A-G, and from well H8.

Reconstitute the diphtheria toxin with saline solution to give a solution of 50 IU/mL. Prepare a 50-fold dilution of this diphtheria toxin dilution in medium B to obtain a working solution of 1.0 IU/mL. Add 25 µL of this working solution to wells A12 and B12 (toxin control). Make twofold serial dilutions by tranferring 25 µL from one well to the next, from well B12 down to H12. Change the tip between each dilution. Discard 25 µL from well H12. Add 25 µL of medium B to wells B12-H12. Then, place 25 µL of the working dilution of the diphtheria toxin (1.0 IU/mL) in each well of rows A-H, from column 1-10, except in wells H9 and H10 (cells only, without serum and without toxin).

Cover the plates with lids or sealer and shake gently. Incubate the plates for at least 2 h in a humid container in a CO_2 incubator at 37 °C. Add 200 µL of cell suspension containing 1 x 10^5 cells/mL to all the wells. Cover the plates with sealer. Incubate at 37 °C for 5 days. Check for microbial contamination by microscopic examination.

Yellow wells are recorded as negative and red wells indicate dead cells and are recorded as positive. A colour between yellow and red indicates a mixture of viable and dead cells and is recorded as positive/negative. The results based on the change in colour can be confirmed by reading viable and dead cells under the microscope.

The potency of the guinea-pig antiserum samples is obtained by comparing the last well of the standard preparation showing complete neutralisation of the toxin, with the last well of the sample demonstrating the same effect. For calculations of potency, it must be remembered that the endpoint may be between a negative well and a positive/negative well.

Method 2: Thiazolyl blue MTT is reduced to a blue/black formazan product by the mitochondrial dehydrogenase of viable cells, and thus serves as a quantitative measure of living cells present, indicating when the toxin has been neutralised by the antitoxin. White or colourless wells indicate absence of viable cells due to insufficient antitoxin to neutralise the toxin.

Reagents and equipment

- *MEM* (Minimal Essential Media).
- *Newborn calf serum.*
- *Antibiotic solution* (containing 10 000 units of penicillin, 10 mg of streptomycin and 25 µg of amphotericin B per millilitre).
- *L-glutamine 200mM solution.*
- *Trypsin-EDTA.*
- *Thiazolyl blue MTT* [3-(4,5-dimethylthiazol-2-yl)-2,5-diphenyltetrazolium bromide].
- *1 M HEPES buffer pH 8.1.* Dissolve 18.75 g of HEPES in 82.5 mL of *water R* and 30.0 mL of *2 M sodium hydroxide R*.
- *Glucose solution (10 per cent).*
- *Complete culture medium.* Mix 200 mL of MEM with 10 mL of newborn calf serum, 3.0 mL of 1 M HEPES buffer pH 8.1, 2.0 mL of glucose solution (10 per cent), 2.0 mL of antibiotic solution and 2.0 mL of L-glutamine 200mM solution.
- *Phosphate-buffered saline pH 7.4 (PBS).* Dissolve 10.0 g of *sodium chloride R*, 0.75 g of *potassium chloride R*, 1.44 g of *disodium hydrogen phosphate R*, and 0.125 g of *potassium dihydrogen phosphate R* in *water R*, and dilute to 1000.0 mL with the same solvent. Adjust the pH if necessary. Autoclave at 120 °C for 15 min.
- *Thiazolyl blue MTT solution.* Dissolve 0.1 g of thiazolyl blue MTT in 20 mL of PBS. Sterilise by filtration (0.2 µm) and store in dark bottle.
- *pH adjuster solution.* Mix 40 mL of *acetic acid R* with 1.25 mL of *1 M hydrochloric acid* and 8.75 mL of *water R*.
- *Extraction buffer pH 4.7.* Dissolve 10 g of *sodium laurilsulfate R* in *water R* and add 50 mL of *dimethylformamide R*, and dilute to 100 mL with *water R*. Adjust the pH with an appropriate volume of pH adjuster solution.

Vero cells are cultured in tissue culture flasks (for example 75 cm^2/250 mL) in an incubator at 36 ± 1 °C, 5 per cent CO_2 and 90 per cent relative humidity. Vero cells are grown in the complete culture medium. After 6-7 days of growth, a confluent monolayer is obtained, the culture supernatant is discarded and the cell layer is washed 3 times with trypsin-EDTA: gently pipette out the medium, add 0.5-1 mL of trypsin-EDTA, swirl the flask and tip the trypsin out. Do this twice, and the 3rd time, place the flask in the incubator for 5 min until the cells start to break from the monolayer. Vigorously tap the side of the flask to make the cells fall. Resuspend the cells in 6-25 mL of fresh complete culture medium to obtain a homogeneous suspension. Prepare a cell suspension in complete culture medium containing approximately 4 × 10^5 cells/mL.

Place 50 µL of complete culture medium in each well except those of column 1. Place 100 µL of diphtheria guinea pig antiserum (for vaccines-human use) (positive control serum, working dilution in complete culture medium of 0.12 IU/mL) in well A1 and 50 µL in well A11. Place 100 µL of guinea pig test serum samples, diluted if necessary, in wells B1-G1. Add 50 µL of the same sample to wells B11-G11 in the corresponding row. Place 100 µL of negative control serum in well H1 and 50 µL in well H11. Using a multi-channel micropipette, make twofold serial dilutions by transferring 50 µL from one well to the next working across the plate (from column 1-10 for rows A-G and from column 1-8 for row H).

Diphtheria toxin of known activity and Lf content is diluted to a suitable working stock containing at least 4 minimum cytopathic doses in complete culture medium. Add 50 µL of the diluted toxin to each well except H9 and H10 (cell control), A11-H11 (serum control) and A12-H12 (toxin control). Add 100 µL of diluted toxin to well A12 and make twofold serial dilutions by transferring 50 µL from one well to the next working down the plate (from well A12-H12). Discard 50 µL from well H12. Add 50 µL of complete medium to wells H9 and H10.

Cover the plates with a lid or sealer and leave for 1 h at room temperature to allow toxin neutralisation to occur. 50 µL of cell suspension containing approximately 4 × 10^5 cells/mL is added to each well. The plates are sealed and incubated at 37 °C for 6 days. Check for microbial contamination by microscopic examination. 10 µL of thyazolyl blue MTT solution is added to each well. The plates are incubated at 37 °C for a further 2-4 h. Then, the medium is removed and 100 µL of extraction buffer pH 4.7 is added to each well. The plates are incubated at 37 °C and left overnight to aid the extraction process. Once extraction and solubilisation is complete, plates are visually examined or read at 570 nm.

Blue/black wells are recorded as negative (all the cells are alive, toxin neutralisation by antitoxin) and white or colourless wells indicate dead cells (no toxin neutralisation) and are recorded as positive.

The potency of the test antitoxin is obtained by comparing the last well of the reference antitoxin preparation showing neutralisation of the toxin, with the last well of the antitoxin preparation demonstrating the same effect. The neutralising antibody titre of the sample being examined can be calculated

by multiplication of the dilution factor with total number of International Units per millilitre of the reference preparation at the end point. The test is valid if all the cells in the toxin control are dead and reference antitoxin gives a neutralisation in at least the first 2 dilutions tested.

07/2011:20707

2.7.7. ASSAY OF PERTUSSIS VACCINE (WHOLE CELL)

The potency of pertussis vaccine (whole cell) is determined by comparing the dose necessary to protect mice against the effects of a lethal dose of *Bordetella pertussis*, administered intracerebrally, with the quantity of a reference preparation, calibrated in International Units, needed to give the same protection.

The International Unit is the activity contained in a stated amount of the International Standard which consists of a quantity of dried pertussis vaccine. The equivalence in International Units of the International Standard is stated by the World Health Organization.

Selection and distribution of the test animals. Use in the test healthy mice less than 5 weeks old of a suitable strain from the same stock, the difference in mass between the heaviest and the lightest being not greater than 5 g. Distribute the mice in 6 groups of not fewer than 16 and 4 groups of 10. The mice must all be of the same sex or the males and females distributed equally between the groups.

Selection of the challenge strain and preparation of the challenge suspension. Select a suitable strain of *B. pertussis* capable of causing the death of mice within 14 days of intracerebral injection. If more than 20 per cent of the mice die within 48 h of the injection the strain is not suitable. Make one subculture from the strain and suspend the harvested *B. pertussis* in a solution containing 10 g/L of *casein hydrolysate R* and 6 g/L of *sodium chloride R* and having a pH of 7.0 to 7.2 or in another suitable solution. Determine the opacity of the suspension. Prepare a series of dilutions in the same solution and allocate each dilution to a group of 10 mice. Inject intracerebrally into each mouse a dose (0.02 mL or 0.03 mL) of the dilution allocated to its group. After 14 days, count the number of mice surviving in each group. From the results, calculate the expected opacity of a suspension containing 100 LD_{50} in each challenge dose. For the test of the vaccine to be examined make a fresh subculture from the same strain of *B. pertussis* and prepare a suspension of the harvested organisms with an opacity corresponding to about 100 LD_{50} in each challenge dose. Prepare 3 dilutions of the challenge suspension.

Determination of potency. Prepare 3 serial dilutions of the vaccine to be examined and 3 similar dilutions of the reference preparation such that in each the intermediate dilution may be expected to protect about 50 per cent of the mice from the lethal effects of the challenge dose of *B. pertussis*. Suggested doses are 1/8, 1/40 and 1/200 of the human dose of the vaccine to be examined and 0.5 IU, 0.1 IU and 0.02 IU of the reference preparation, each dose being contained in a volume not exceeding 0.5 mL. Allocate the 6 dilutions, one to each of the groups of not fewer than 16 mice, and inject intraperitoneally into each mouse one dose of the dilution allocated to its group. After 14 - 17 days inject intracerebrally into each animal in the groups of not fewer than 16, one dose of the challenge suspension. Allocate the challenge suspension and the 3 dilutions made from it, one to each of the groups of 10 mice, and inject intracerebrally one dose of each suspension into each mouse in the group to which that suspension is allocated. Exclude from consideration any mice that die within 48 h of challenge. Count the number of mice surviving in each of the groups after 14 days. Calculate the potency of the vaccine to be examined relative to the potency of the reference preparation on the basis of the numbers of animals surviving in each of the groups of not fewer than 16.

The test is not valid unless:

- for both the vaccine to be examined and the reference preparation, the 50 per cent protective dose lies between the largest and the smallest doses given to the mice;
- the number of animals that die in the 4 groups of 10 injected with the challenge suspension and its dilutions indicates that the challenge dose is approximately 100 LD_{50}; and
- the statistical analysis shows no deviation from linearity or parallelism.

The test may be repeated but when more than one test is performed the results of all valid tests must be combined.

01/2008:20708
corrected 6.0

2.7.8. ASSAY OF TETANUS VACCINE (ADSORBED)

The potency of tetanus vaccine is determined by administration of the vaccine to animals (guinea-pigs or mice) followed either by challenge with tetanus toxin (method A or B) or by determination of the titre of antibodies against tetanus toxoid in the serum of the guinea-pigs (method C). In both cases, the potency of the vaccine is calculated by comparison with a reference vaccine, calibrated in International Units. For methods A and B, in countries where the paralysis method is not obligatory, the LD_{50} method may be used. For the LD_{50} method, the number of animals and the procedure are identical to those described for the paralysis method, but the end-point is the death of the animal rather than paralysis.

The International Unit is the activity contained in a stated amount of the International Standard for tetanus toxoid (adsorbed). The equivalence in International Units of the International Standard is stated by the World Health Organization.

Tetanus vaccine (adsorbed) BRP is calibrated in International Units with reference to the International Standard.

The method chosen for the assay of tetanus vaccine (adsorbed) depends on the intended purpose. Method A or B is used:

1. during development of a vaccine, to assay batches produced to validate the production;
2. wherever revalidation is needed following a significant change in the manufacturing process.

Method A or B may also be used for the routine assay of batches of vaccine, but in the interests of animal welfare, method C is used wherever possible.

Method C may be used, except as specified under 1 and 2 above, after verification of the suitability of the method for the product. For this purpose, a suitable number of batches (usually 3) are assayed by method C and method A or B. Where different vaccines (monovalent or combinations) are prepared from tetanus toxoid of the same origin and with comparable levels (expressed in Lf/mL) of the same tetanus toxoid, suitability demonstrated for the combination with the highest number of components can be assumed to be valid for combinations with fewer components and for monovalent vaccines. Any combinations containing a whole-cell pertussis component or containing haemophilus type b conjugate vaccine with tetanus toxoid in the same vial must always be assessed separately.

For combinations containing diphtheria and tetanus components, the serological assay (method C) can be performed with the same group of animals used for the serological assay of the diphtheria vaccine (adsorbed) (*2.7.6*) when the common immunisation conditions for the tetanus and the diphtheria components (for example, doses, duration) have been demonstrated to be valid for the combined vaccine.

The design of the assays described below uses multiple dilutions for the test and reference preparations. Based on the potency data obtained in multiple-dilution assays, it may be possible to reduce the number of animals needed to obtain a statistically significant result by applying a simplified model such as a single dilution for both test and reference preparations. Such a model enables the analyst to determine whether the potency of the test preparation is significantly higher than the minimum required, but does not give information on the dose-response curves and their linearity, parallelism and significant slope. The simplified model allows for a considerable reduction in the number of animals required and must be considered by each analyst in accordance with the provisions of the European Convention for the Protection of Vertebrate Animals Used for Experimental and Other Scientific Purposes.

Where a single-dilution assay is used, production and test consistency over time are monitored via suitable indicators and by carrying out a full multiple-dilution assay periodically, for example every 2 years. For serological assays, suitable indicators to monitor test consistency are:

- the mean and standard deviation of relative antitoxin titres or scores of the serum samples obtained after administration of a fixed dose of the vaccine reference preparation;
- the antitoxin titres or scores of run controls (positive and negative serum samples);
- the ratio of antitoxin titres or scores for the positive serum control to the serum samples corresponding to the reference vaccine.

METHOD A. CHALLENGE TEST IN GUINEA-PIGS

SELECTION AND DISTRIBUTION OF THE TEST ANIMALS

Use in the test healthy guinea-pigs from the same stock, each weighing 250-350 g. Use guinea-pigs of the same sex or with males and females equally distributed between the groups. Distribute the guinea-pigs in not fewer than 6 equal groups; use groups containing a number of animals sufficient to obtain results that fulfil the requirements for a valid assay prescribed below. If the activity of the challenge toxin has to be determined, include 3 further groups of 5 guinea-pigs as unvaccinated controls.

SELECTION OF THE CHALLENGE TOXIN

Select a preparation of tetanus toxin containing not less than 50 times the 50 per cent paralytic dose per millilitre. If the challenge toxin preparation has been shown to be stable, it is not necessary to verify the paralytic dose for every assay.

PREPARATION OF THE CHALLENGE TOXIN SOLUTION

Immediately before use, dilute the challenge toxin with a suitable diluent (for example, peptone buffered saline solution pH 7.4) to obtain a stable challenge toxin solution containing approximately 50 times the 50 per cent paralytic dose per millilitre. If necessary, use portions of the challenge toxin solution diluted 1 to 16, 1 to 50 and 1 to 160 with the same diluent to determine the activity of the toxin.

DILUTION OF THE TEST AND REFERENCE PREPARATIONS

Using a 9 g/L solution of *sodium chloride R*, prepare dilutions of the vaccine to be examined and of the reference preparation, such that for each, the dilutions form a series differing by not more than 2.5-fold steps and in which the intermediate dilutions, when injected subcutaneously at a dose of 1.0 mL per guinea-pig, protect approximately 50 per cent of the animals from the paralytic effects of the subcutaneous injection of the quantity of tetanus toxin prescribed for this test.

IMMUNISATION AND CHALLENGE

Allocate the dilutions, 1 to each of the groups of guinea-pigs, and inject subcutaneously 1.0 mL of each dilution into each guinea-pig in the group to which that dilution is allocated. After 28 days, inject subcutaneously into each animal 1.0 mL of the challenge toxin solution (containing 50 times the 50 per cent paralytic dose).

DETERMINATION OF THE ACTIVITY OF THE CHALLENGE TOXIN

If necessary, allocate the 3 dilutions made from the challenge toxin solution, 1 to each of the 3 groups of 5 guinea-pigs, and inject subcutaneously 1.0 mL of each solution into each guinea-pig in the group to which that solution is allocated. The activity and stability of the challenge toxin are determined by carrying out a suitable number of determinations of the 50 per cent paralytic dose. It is then not necessary to repeat the determination for each assay.

READING AND INTERPRETATION OF RESULTS

Examine the guinea-pigs twice daily. Remove and euthanise all animals showing definite signs of tetanus paralysis. Count the number of guinea-pigs without paralysis 5 days after injection of the challenge toxin. Calculate the potency of the vaccine to be examined relative to the potency of the reference preparation on the basis of the proportion of challenged animals without paralysis in each group of vaccinated guinea-pigs, using the usual statistical methods (for example, *5.3*).

REQUIREMENTS FOR A VALID ASSAY

The test is not valid unless:

- for both the vaccine to be examined and the reference preparation, the 50 per cent protective dose lies between the largest and smallest doses of the preparations given to the guinea-pigs;
- where applicable, the number of paralysed animals in the 3 groups of 5 injected with the dilutions of the challenge toxin solution indicates that the challenge was approximately 50 times the 50 per cent paralytic dose;
- the confidence limits ($P = 0.95$) are not less than 50 per cent and not more than 200 per cent of the estimated potency;
- the statistical analysis shows a significant slope and no deviation from linearity and parallelism of the dose-response curves (chapter *5.3* describes possible alternatives if significant deviations are observed).

The test may be repeated but when more than 1 test is performed the results of all valid tests must be combined in the estimate of potency.

METHOD B. CHALLENGE TEST IN MICE

SELECTION AND DISTRIBUTION OF THE TEST ANIMALS

Use in the test healthy mice from the same stock, about 5 weeks old and from a strain shown to be suitable. Use mice of the same sex or with males and females equally distributed between the groups. Distribute the mice in not fewer than 6 equal groups; use groups containing a number of animals sufficient to obtain results that fulfil the requirements for a valid assay prescribed below. If the challenge toxin to be used has not been shown to be stable or has not been adequately standardised, include 3 further groups of not fewer than 5 mice to serve as unvaccinated controls.

SELECTION OF THE CHALLENGE TOXIN

Select a preparation of tetanus toxin containing not less than 100 times the 50 per cent paralytic dose per millilitre. If the challenge toxin preparation has been shown to be stable, it is not necessary to verify the paralytic dose for every assay.

PREPARATION OF THE CHALLENGE TOXIN SOLUTION

Immediately before use, dilute the challenge toxin with a suitable diluent (for example, peptone buffered saline solution pH 7.4) to obtain a stable challenge toxin solution containing approximately 50 times the 50 per cent paralytic dose in 0.5 mL. If necessary, use portions of the challenge toxin solution diluted 1 to 16, 1 to 50 and 1 to 160 with the same diluent to determine the activity of the toxin.

DILUTION OF THE TEST AND REFERENCE PREPARATIONS

Using a 9 g/L solution of *sodium chloride R*, prepare dilutions of the vaccine to be examined and of the reference preparation, such that for each, the dilutions form a series differing by not more than 2.5-fold steps and in which the intermediate dilutions, when injected subcutaneously at a dose of 0.5 mL per mouse, protect approximately 50 per cent of the animals from the paralytic effects of the subcutaneous injection of the quantity of tetanus toxin prescribed for this test.

IMMUNISATION AND CHALLENGE

Allocate the dilutions, 1 to each of the groups of mice, and inject subcutaneously 0.5 mL of each dilution into each mouse in the group to which that dilution is allocated. After 28 days, inject subcutaneously into each animal 0.5 mL of the challenge toxin solution (containing 50 times the 50 per cent paralytic dose).

DETERMINATION OF THE ACTIVITY OF THE CHALLENGE TOXIN

If necessary, allocate the 3 dilutions made from the challenge toxin solution, 1 to each of the 3 groups of not fewer than 5 mice, and inject subcutaneously 0.5 mL of each solution into each mouse in the group to which that solution is allocated.

READING AND INTERPRETATION OF RESULTS

Examine the mice twice daily. Remove and euthanise all animals showing definite signs of tetanus paralysis. Count the number of mice without paralysis 4 days after injection of the challenge toxin. Calculate the potency of the vaccine to be examined relative to the potency of the reference preparation on the basis of the proportion of challenged animals without paralysis in each group of vaccinated mice, using the usual statistical methods (for example, *5.3*).

REQUIREMENTS FOR A VALID ASSAY

The test is not valid unless:

- for both the vaccine to be examined and the reference preparation, the 50 per cent protective dose lies between the largest and smallest doses of the preparations given to the mice;
- where applicable, the number of paralysed animals in the 3 groups of not fewer than 5 injected with the dilutions of the challenge toxin solution, indicates that the challenge dose was approximately 50 times the 50 per cent paralytic dose;
- the confidence limits ($P = 0.95$) are not less than 50 per cent and not more than 200 per cent of the estimated potency;
- the statistical analysis shows a significant slope and no deviation from linearity and parallelism of the dose-response curves (chapter *5.3* describes possible alternatives if significant deviations are observed).

The test may be repeated but when more than 1 test is performed the results of all valid tests must be combined in the estimate of potency.

METHOD C. DETERMINATION OF ANTIBODIES IN GUINEA-PIGS

SELECTION AND DISTRIBUTION OF THE TEST ANIMALS

Use in the test healthy guinea-pigs from the same stock, each weighing 250-350 g. Use guinea-pigs of the same sex or with males and females equally distributed between the groups. Distribute the guinea-pigs in not fewer than 6 equal groups; use groups containing a number of animals sufficient to obtain results that fulfil the requirements for a valid assay prescribed below. Use a further group of non-vaccinated guinea-pigs of the same origin to provide a negative serum control. If test consistency has been demonstrated, a reference negative serum control may be used.

REFERENCE PREPARATION

Use a suitable reference preparation such as *tetanus vaccine (adsorbed) BRP* or a batch of vaccine shown to be effective in clinical studies, or a batch representative thereof, and which has been calibrated in International Units with reference to *tetanus vaccine (adsorbed) BRP* or the International Standard for tetanus toxoid (adsorbed).

DILUTION OF THE TEST AND REFERENCE PREPARATIONS

Using a 9 g/L solution of *sodium chloride R* as diluent, prepare serial dilutions of the vaccine to be examined and the reference preparation; series differing by 2.5- to 5-fold steps have been found to be suitable. Use not fewer than 3 dilutions within the range of, for example, 0.5-16 IU/mL for each series. Use the dilutions for immunisation preferably within 1 h of preparation. Allocate 1 dilution to each group of guinea-pigs.

IMMUNISATION

Inject subcutaneously to each guinea-pig 1.0 mL of the dilution allocated to its group.

BLOOD SAMPLING

35-42 days after immunisation, take a blood sample from each vaccinated and control guinea-pig using a suitable method.

PREPARATION OF SERUM SAMPLES

Avoid frequent freezing and thawing of serum samples. To avoid microbial contamination, it is preferable to carry out manipulations in a laminar-flow cabinet.

DETERMINATION OF ANTIBODY TITRE

Determine the relative antibody titre or score of each serum sample by a suitable immunochemical method (*2.7.1*). The methods shown below (enzyme-linked immunosorbent assay (ELISA) and toxin-binding inhibition (ToBI)) have been found to be suitable.

CALCULATION OF POTENCY

Calculate the potency of the vaccine to be examined in International Units relative to the reference preparation, using the usual statistical methods (for example, *5.3*).

REQUIREMENTS FOR A VALID ASSAY

The test is not valid unless:

- the confidence limits ($P = 0.95$) are not less than 50 per cent and not more than 200 per cent of the estimated potency;
- the statistical analysis shows a significant slope and no deviation from linearity and parallelism of the dose-response curves (chapter *5.3* describes possible alternatives if significant deviations are observed).

The test may be repeated but when more than 1 test is performed the results of all valid tests must be combined in the estimate of potency.

The following section is published for information.

Assay of tetanus vaccine (adsorbed): guidelines

METHOD A. CHALLENGE TEST IN GUINEA-PIGS

READING AND INTERPRETATION OF RESULTS

In order to minimise suffering in the test animals, it is recommended to note the degree of paralysis on a scale such as that shown below. The scale gives typical signs when subcutaneous injection of the challenge toxin is made mid-ventrally, directly behind the sternum with the needle pointing towards the neck of the guinea-pig. Grade T3 is taken as the end-point, but with experience grade T2 can be used instead. Tetanus toxin produces in at least 1 of the forelimbs paralysis that can be recognised at an early stage. The tetanus grades in guinea-pigs are characterised by the following signs:

- T1: slight stiffness of 1 forelimb, but difficult to observe;
- T2: paresis of 1 forelimb which still can function;

- T3: paralysis of 1 forelimb. The animal moves reluctantly, the body is often slightly banana-shaped owing to scoliosis;
- T4: the forelimb is completely stiff and the toes are immovable. The muscular contraction of the forelimb is very pronounced and usually scoliosis is observed;
- T5: tetanus seizures, continuous tonic spasm of muscles;
- D: death.

METHOD B. CHALLENGE TEST IN MICE

READING AND INTERPRETATION OF RESULTS

In order to minimise suffering in the test animals, it is recommended to note the degree of paralysis on a scale such as that shown below. The scale gives typical signs when injection of the challenge toxin is made in the dorsal region, close to one of the hind legs. Grade T3 is taken as the end-point, but with experience grade T2 can be used instead. Tetanus toxin produces in the toxin-injected hind leg paresis followed by paralysis that can be recognised at an early stage. The tetanus grades in mice are characterised by the following signs:

- T1: slight stiffness of toxin-injected hind leg, only observed when the mouse is lifted by the tail;
- T2: paresis of the toxin-injected hind leg, which still can function for walking;
- T3: paralysis of the toxin-injected hind leg, which does not function for walking;
- T4: the toxin-injected hind leg is completely stiff with immovable toes;
- T5: tetanus seizures, continuous tonic spasm of muscles;
- D: death.

METHOD C. DETERMINATION OF ANTIBODIES IN GUINEA-PIGS

PREPARATION OF SERUM SAMPLES

For the preparation of serum samples, the following technique has been found to be suitable. Invert the tubes containing blood samples 6 times and allow to stand at 37 °C for 2 h, then at 4 °C for 2 h. Centrifuge at room temperature at 800 *g* for 20 min. Transfer the serum to sterile tubes and store at a temperature below – 20 °C. At least a 40 per cent yield of serum is obtained by this procedure.

DETERMINATION OF ANTIBODY TITRE

The ELISA and ToBI tests shown below are given as examples of immunochemical methods that have been found to be suitable for the determination of antibody titre.

Determination of antibody titre in guinea-pig serum by enzyme-linked immunosorbent assay (ELISA). Dilutions of test and reference sera are made on ELISA plates coated with tetanus toxoid. A positive guinea-pig serum control and a negative guinea-pig serum control are included on each plate to monitor the assay performance. Peroxidase-conjugated rabbit or goat antibody directed against guinea-pig-IgG is added, followed by a peroxidase substrate. Optical density is measured and the relative antibody titre is calculated using the usual statistical methods (for example, *5.3*).

Reagents and equipment

- *ELISA plates*: 96 wells, columns 1-12, rows A-H.
- *Clostridium tetani guinea-pig antiserum (for vaccines-human use) BRP* (positive control serum).
- *Peroxidase conjugate*. Peroxidase-conjugated rabbit or goat antibody directed against guinea-pig IgG.
- *Tetanus toxoid*.
- *Carbonate coating buffer pH 9.6*. Dissolve 1.59 g of *anhydrous sodium carbonate R* and 2.93 g of *sodium hydrogen carbonate R* in 1000 mL of *water R*. Distribute into 150 mL bottles and sterilise by autoclaving at 121 °C for 15 min.
- *Phosphate-buffered saline pH 7.4 (PBS)*. Dissolve with stirring 80.0 g of *sodium chloride R*, 2.0 g of *potassium dihydrogen phosphate R*, 14.3 g of *disodium hydrogen phosphate dihydrate R* and 2.0 g of *potassium chloride R* in 1000 mL of *water R*. Store at room temperature to prevent crystallisation. Dilute to 10 times its volume with *water R* before use.
- *Citric acid solution*. Dissolve 10.51 g of *citric acid R* in 1000 mL of *water R* and adjust the solution to pH 4.0 with a 400 g/L solution of *sodium hydroxide R*.
- *Washing buffer*. PBS containing 0.5 g/L of *polysorbate 20 R*.
- *Diluent block buffer*. PBS containing 0.5 g/L of *polysorbate 20 R* and 25 g/L of dried skimmed milk.
- *Peroxidase substrate*. Shortly before use, dissolve 10 mg of *diammonium 2,2′-azinobis(3-ethylbenzothiazoline-6-sulfonate) R* (ABTS) in 20 mL of citric acid solution. Immediately before use add 5 µL of *strong hydrogen peroxide solution R*.

Method

The description below is given as an example of a suitable plate layout but others may be used. Wells 1A-H are for negative control serum and wells 2A-H and 12A-H are for positive control serum for assay monitoring. Wells 3-11A-H are for test samples.

Coat each well of the ELISA plates with 100 µL of tetanus toxoid solution (0.5 Lf/mL in carbonate coating buffer pH 9.6). Allow to stand overnight at 4 °C in a humid atmosphere. To avoid temperature gradient effects, do not stack more than 4 plates high. On the following day, wash the plates thoroughly with washing buffer. Block the plates by addition of 100 µL of diluent block buffer to each well. Incubate in a humid atmosphere at 37 °C for 1 h. Wash the plates thoroughly with washing buffer. Place 100 µL of diluent block buffer in each well of the plates, except those of row A. Prepare suitable dilutions of negative control serum, positive control serum (from about 0.01 IU/mL) and test sera. Allocate the negative control serum to column 1, positive control serum to columns 2 and 12 and test sera to columns 3-11 and add 100 µL of each serum to the first 2 wells of the column to which it is allocated. Using a multichannel micropipette, make twofold serial dilutions from row B down the plate to row H, by transferring 100 µL from one well to the next. Discard 100 µL from the last row so that all wells contain 100 µL. Incubate at 37 °C for 2 h. Wash thoroughly with washing buffer. Prepare a suitable dilution (a 2000-fold dilution has been found to be suitable) of peroxidase conjugate in diluent block buffer and add 100 µL to each well. Incubate at 37 °C in a humid atmosphere for 1 h. Wash the plates thoroughly with washing buffer. Add 100 µL of peroxidase substrate to each well. Allow to stand at room temperature, protected from light, for 30 min. Read the plates at 405 nm in the same order as addition of substrate was made.

Determination of antibody titre in guinea-pig serum by toxin- or toxoid-binding inhibition (ToBI). Tetanus toxin or toxoid is added to serial dilutions of test and reference sera; the serum/antigen mixtures are incubated overnight. To determine unbound toxin or toxoid, the mixtures are transferred to an ELISA plate coated with tetanus antitoxin. Peroxidase-conjugated equine anti-tetanus IgG is added followed by a peroxidase substrate. Optical density is measured and the antibody titre is calculated using the usual statistical methods (for example, *5.3*). A positive control serum and a negative control serum are included on each plate to monitor assay performance.

Reagents and equipment

- *Round-bottomed, rigid polystyrene microtitre plates*.
- *Flat-bottomed ELISA plates*.
- *Tetanus toxin or tetanus toxoid*.
- *Clostridium tetani guinea-pig antiserum (for vaccines-human use) BRP* (positive control serum).
- *Equine anti-tetanus IgG*.
- *Peroxidase-conjugated equine anti-tetanus IgG*.

- *Carbonate buffer pH 9.6.* Dissolve 1.5 g of *anhydrous sodium carbonate R*, 2.39 g of *sodium hydrogen carbonate R* and 0.2 g of *sodium azide R* in 1000 mL of *water R*, adjust to pH 9.6 and autoclave at 121 °C for 20 min.
- *Sodium acetate buffer pH 5.5.* Dissolve 90.2 g of *anhydrous sodium acetate R* in 900 mL of *water R*, adjust to pH 5.5 using a saturated solution of *citric acid monohydrate R* and dilute to 1000 mL with *water R*.
- *Phosphate-buffered saline pH 7.2 (PBS).* Dissolve 135.0 g of *sodium chloride R*, 20.55 g of *disodium hydrogen phosphate dihydrate R* and 4.80 g of *sodium dihydrogen phosphate monohydrate R* in *water R* and dilute to 15 L with the same solvent. Autoclave at 100 °C for 60 min.
- *Diluent buffer.* PBS containing 5 g/L of *bovine albumin R* and 0.5 g/L of *polysorbate 80 R*.
- *Block buffer.* PBS containing 5 g/L of *bovine albumin R*.
- *Tetramethylbenzidine solution.* 6 g/L solution of *tetramethylbenzidine R* in *ethanol (96 per cent) R*. The substance dissolves within 30-40 min at room temperature.
- *Peroxidase substrate.* Mix 90 mL of *water R*, 10 mL of sodium acetate buffer pH 5.5, 1.67 mL of tetramethylbenzidine solution and 20 µL of *strong hydrogen peroxide solution R*.
- *Washing solution.* Tap water containing 0.5 g/L of *polysorbate 80 R*.

Method

Block the microtitre plates by placing in each well 150 µL of block buffer. Cover the plates with a lid or sealer. Incubate in a humid atmosphere at 37 °C for 1 h. Wash the plates thoroughly with washing solution. Place 100 µL of PBS in each well. Place 100 µL of reference guinea-pig tetanus antitoxin in the first well of a row. Place 100 µL of undiluted test sera in the first well of the required number of rows. Using a multichannel micropipette, make twofold serial dilutions across the plate (up to column 10), by transferring 100 µL from one well to the next. Discard 100 µL from the last column so that all wells contain 100 µL. Prepare a 0.1 Lf/mL solution of tetanus toxin or toxoid using PBS as diluent. Add 40 µL of this solution to each well except those of column 12. The wells of column 11 are a positive control. Add 40 µL of PBS to the wells of column 12 (negative control). Shake the plates gently and cover them with lids. Coat the ELISA plates: immediately before use make a suitable dilution of equine anti-tetanus IgG in carbonate buffer pH 9.6 and add 100 µL to each well. Incubate the 2 series of plates overnight in a humid atmosphere at 37 °C. To avoid temperature gradient effects, do not stack more than 4 plates high. Cover the plates with lids. On the following day, wash the ELISA plates thoroughly with washing solution. Block the plates by placing in each well 125 µL of block buffer. Incubate at 37 °C in a humid atmosphere for 1 h. Wash the plates thoroughly with washing solution. Transfer 100 µL of the pre-incubation mixture from the polystyrene plates to the corresponding wells of the ELISA plates, starting with column 12 and then continuing from 1 to 11. Cover the plates with a lid. Incubate at 37 °C in a humid atmosphere for 2 h. Wash the ELISA plates thoroughly with washing solution. Make a suitable dilution (a 4000-fold dilution has been found to be suitable) of the peroxidase-conjugated equine anti-tetanus IgG in diluent buffer. Add 100 µL of the dilution to each well and cover the plates with a lid. Incubate at 37 °C in a humid atmosphere for 1.5 h. Wash the ELISA plates thoroughly with washing solution. Add 100 µL of peroxidase substrate to each well. A blue colour develops. Incubate the plates at room temperature. Stop the reaction at a given time (within 10 min) by the addition of 100 µL of *2 M sulfuric acid* to each well in the same order as the addition of substrate. The colour changes from blue to yellow. Measure the absorbance at 450 nm immediately after addition of the sulfuric acid or maintain the plates in the dark until reading.

07/2009:20709
corrected 7.6

2.7.9. TEST FOR Fc FUNCTION OF IMMUNOGLOBULIN

The test for Fc function of immunoglobulin is carried out using method A or B. Method B is an adaptation of the procedure of method A for the use of microtitre plates for the measurement of complement-mediated haemolysis. Differences in the test procedures between methods A and B are addressed in the test.

REAGENTS

Stabilised human blood. Collect group O human blood into ACD anticoagulant solution. Store the stabilised blood at 4 °C for not more than 3 weeks.

Phosphate-buffered saline pH 7.2. Dissolve 1.022 g of *anhydrous disodium hydrogen phosphate R*, 0.336 g of *anhydrous sodium dihydrogen phosphate R* and 8.766 g of *sodium chloride R* in 800 mL of *water R* and dilute to 1000 mL with the same solvent.

Magnesium and calcium stock solution. Dissolve 1.103 g of *calcium chloride R* and 5.083 g of *magnesium chloride R* in *water R* and dilute to 25 mL with the same solvent.

Barbital buffer stock solution. Dissolve 207.5 g of *sodium chloride R* and 25.48 g of *barbital sodium R* in 4000 mL of *water R* and adjust to pH 7.3 using *1 M hydrochloric acid*. Add 12.5 mL of magnesium and calcium stock solution and dilute to 5000 mL with *water R*. Store at 4 °C in transparent containers.

Albumin barbital buffer solution. Dissolve 0.150 g of *bovine albumin R* in 20 mL of barbital buffer stock solution and dilute to 100 mL with *water R*. Prepare immediately before use.

Tannic acid solution. Dissolve 10 mg of *tannic acid R* in 100 mL of phosphate-buffered saline pH 7.2. Prepare immediately before use.

Guinea-pig complement. Prepare a pool of serum from the blood of not fewer than 10 guinea-pigs. Separate the serum from the clotted blood by centrifugation at about 4 °C. Store the serum in small amounts below – 70 °C. Immediately before starting complement-initiated haemolysis, dilute to 125-200 CH_{50} per millilitre with albumin barbital buffer solution and store in an ice-bath during the test.

Rubella antigen. Suitable rubella antigen for haemagglutination-inhibition titre (HIT). Titre > 256 HA units.

Preparation of tanned human red blood cells. Separate human red blood cells by centrifuging an appropriate volume of stabilised human blood, wash the cells at least 3 times with phosphate-buffered saline pH 7.2 and suspend at 2 per cent *V/V* in phosphate-buffered saline pH 7.2. Add 0.2 mL of tannic acid solution to 14.8 mL of phosphate-buffered saline pH 7.2. Mix 1 volume of the freshly prepared dilution with 1 volume of the human red blood cell suspension and incubate at 37 °C for 10 min. Collect the cells by centrifugation (800 *g* for 10 min), discard the supernatant and wash the cells once with phosphate-buffered saline pH 7.2. Resuspend the tanned cells at 1 per cent *V/V* in phosphate-buffered saline pH 7.2.

Antigen coating of tanned human red blood cells. Take a suitable volume (V_s) of tanned cells, add 0.2 mL of rubella antigen per 1.0 mL of tanned cells and incubate at 37 °C for 30 min. Collect the cells by centrifugation (800 *g* for 10 min) and discard the supernatant. Add a volume of albumin barbital buffer solution equivalent to the discarded supernatant, resuspend and collect the cells as described and repeat the washing procedure. Resuspend with albumin barbital buffer solution using a volume equivalent to 3/4 of V_s, thereby obtaining the initial volume (V_i). Mix 900 µL of albumin barbital buffer solution with 100 µL of V_i, which is thereby reduced to the residual volume (V_r), and determine the initial absorbance at 541 nm (A). Dilute V_r by a factor equal to A

using albumin barbital buffer solution, thereby obtaining the final adjusted volume $V_f = V_r \times A$ of sensitised human red blood cells and adjusting A to 1.0 ± 0.1 for a tenfold dilution.

Antibody binding of antigen-coated tanned human red blood cells. Prepare the following solutions in succession and in duplicate, using for each solution a separate half-micro cuvette (for example, disposable type) or test-tube.

(1) *Test solutions*. If necessary, adjust the immunoglobulin to be examined to pH 7.

Where method A is performed, dilute volumes of the preparation to be examined with albumin barbital buffer to obtain 30 mg and 40 mg of immunoglobulin and adjust the volume to 900 µL with albumin barbital buffer.

Where method B is performed, dilute volumes of the preparation to be examined with albumin barbital buffer to obtain 15 mg and 30 mg of immunoglobulin and adjust the volume to 1200 µL with albumin barbital buffer.

(2) *Reference solutions*. Prepare as for the test solutions using *human immunoglobulin (Fc function and molecular size) BRP*.

(3) *Complement control*. Albumin barbital buffer solution.

Where method A is performed, add to each cuvette/test-tube 100 µL of sensitised human red blood cells and mix well. Allow to stand for 15 min, add 1000 µL of albumin barbital buffer solution, collect the cells by centrifugation (1000 *g* for 10 min) of the cuvette/test-tube and remove 1900 µL of the supernatant. Replace the 1900 µL with albumin barbital buffer solution and repeat the whole of the washing procedure, finally leaving a volume of 200 µL. Test samples may be stored in sealed cuvettes/test-tubes at 4 °C for not longer than 24 h.

Where method B is performed, add to each test-tube 300 µL of sensitised human red blood cells and mix well (the final immunoglobulin concentration is in the range of 10-20 mg/mL). Allow to stand for 15 min, add 1500 µL of albumin barbital buffer solution and stir gently until homogeneous. Collect the cells by centrifugation (1000 *g* for 10 min) of the test-tube, remove the supernatant and add approximately 3 mL of albumin barbital buffer solution. Repeat this operation up to 4 times in total, leaving a final volume of 300 µL. Test samples may be stored in sealed test-tubes at 4 °C for not longer than 24 h.

Complement-initiated haemolysis.

To measure haemolysis where method A is performed, add 600 µL of albumin barbital buffer solution warmed to 37 °C to the test sample, resuspend the cells carefully by repeated pipetting (not fewer than 5 times) and place the cuvette in the thermostatted cuvette holder of a spectrophotometer. After 2 min, add 200 µL of diluted guinea-pig complement (125-200 CH_{50}/mL), mix thoroughly by pipetting twice and start immediately after the second pipetting the time-dependent recording of absorbance at 541 nm, using albumin barbital buffer solution as the compensation liquid. Stop the measurement if absorbance as a function of time has clearly passed the inflexion point.

To measure haemolysis where method B is performed, add 900 µL of albumin barbital buffer solution warmed to 37 °C to each test-tube and resuspend the cells carefully by repeated pipetting (not fewer than 5 times). The microtitre plate must be prewarmed to 37 °C before starting the test. Transfer 240 µL of each solution into 4 microtitre plate wells then incubate the microplate at 37 °C for 6 min, stirring gently every 10 s. To each microtitre plate well add 60 µL of diluted guinea-pig complement (150 CH_{50}/mL). Mix for 10 s and immediately start recording the absorbance at 541 nm at 37 °C, measuring every 20 s. Stop the measurement if the absorbance as a function of time has clearly passed the inflexion point.

Evaluation. For each cuvette/test-tube/well, determine the slope (S) of the haemolysis curve at the approximate inflexion point by segmenting the steepest section in suitable time intervals (for example, Δt = 1 min), and calculate S between adjacent intersection points, expressed as ΔA per minute. The largest value for S serves as S_{exp}. In addition, determine the absorbance at the start of measurement (A_s) by extrapolating the curve, which is almost linear and parallel to the time axis within the first few minutes. Correct S_{exp} using the expression:

$$S' = \frac{S_{\exp}}{A_s}$$

Calculate the arithmetic mean of the values of S' for each preparation (test and reference solution). Calculate the index of Fc function (I_{Fc}) from the expression:

$$I_{Fc} = \frac{100 \times \left(\overline{S'} - \overline{S'}_c\right)}{\overline{S'_s} - \overline{S'}_c}$$

$\overline{S'}$ = arithmetic mean of the corrected slope for the preparation to be examined;

$\overline{S'_s}$ = arithmetic mean of the corrected slope for the reference preparation;

$\overline{S'_c}$ = arithmetic mean of the corrected slope for the complement control.

Calculate the index of Fc function for the preparation to be examined: the value is not less than that stated in the leaflet accompanying the reference preparation.

01/2008:20710

2.7.10. ASSAY OF HUMAN COAGULATION FACTOR VII

Human coagulation factor VII is assayed by its biological activity as a factor VIIa-tissue factor complex in the activation of factor X in the presence of calcium ions and phospholipids. The potency of a factor VII preparation is estimated by comparing the quantity necessary to achieve a certain rate of factor Xa formation in a test mixture containing the substances that take part in the activation of factor X, and the quantity of the International Standard, or of a reference preparation calibrated in International Units, required to produce the same rate of factor Xa formation.

The International Unit is the factor VII activity of a stated amount of the International Standard, which consists of freeze-dried plasma. The equivalence in International Units of the International Standard is stated by the World Health Organization.

Human coagulation factor VII concentrate BRP is calibrated in International Units by comparison with the International Standard.

The chromogenic assay method consists of 2 consecutive steps: the factor VII-dependent activation of factor X reagent mixture containing tissue factor, phospholipids and calcium ions, followed by enzymatic cleavage of a chromogenic factor Xa substrate into a chromophore that can be quantified spectrophotometrically. Under appropriate assay conditions, there is a linear relation between the rate of factor Xa formation and the factor VII concentration. The assay is summarised in the following scheme.

Step 1

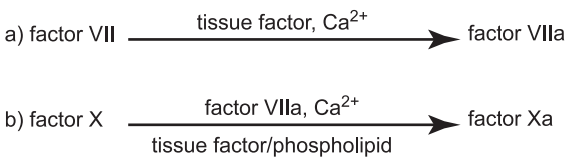

Step 2

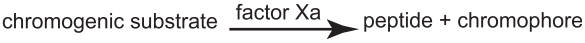

Both steps employ reagents that may be obtained commercially from a variety of sources. Although the composition of individual reagents may be subject to some variation, their essential features are described in the following specification.

REAGENTS

The coagulation factor reagent comprises purified proteins derived from human or bovine sources. These include factor X and thromboplastin tissue factor/phospholipid as factor VII activator. These proteins are partly purified and do not contain impurities that interfere with the activation of factor VII or factor X. Factor X is present in amounts giving a final concentration during the first step of the assay of 10-350 nmol/L, preferably 14-70 nmol/L. Thromboplastin from natural sources (bovine or rabbit brain) or synthetic preparations may be used as the tissue factor/phospholipid component. Thromboplastin suitable for use in prothrombin time determination is diluted 1:5 to 1:50 in buffer such that the final concentration of Ca^{2+} is 15-25 mmol/L. The final factor Xa generation is performed in a solution containing human or bovine albumin at a concentration such that adsorption losses do not occur and which is appropriately buffered at pH 7.3-8.0. In the final incubation mixture, factor VII must be the only rate-limiting component and each reagent component must lack the ability to generate factor Xa on its own.

The second step comprises the quantification of the formed factor Xa employing a chromogenic substrate that is specific for factor Xa. Generally this consists of a short peptide of between three and five amino acids, bound to a chromophore group. On cleavage of this group from the peptide substrate, its absorption maximum shifts to a wavelength allowing its spectrophotometric quantification. The substrate is usually dissolved in *water R* and used at a final concentration of 0.2-2 mmol/L. The substrate may also contain appropriate inhibitors to stop further factor Xa generation (addition of edetate).

ASSAY PROCEDURE

Reconstitute the entire contents of one ampoule of the reference preparation and the preparation to be examined by adding the appropriate quantity of *water R*; use within 1 h. Add sufficient prediluent to the reconstituted preparations to produce solutions containing between 0.5 IU and 2.0 IU of factor VII per millilitre.

Prepare further dilutions of reference and test preparations using an isotonic non-chelating buffer containing 1 per cent of bovine or human albumin, buffered preferably between pH 7.3 and 8.0. Prepare at least three separate, independent dilutions for each material, preferably in duplicate. Prepare the dilutions such that the final factor VII concentration is below 0.005 IU/mL.

Prepare a control solution that includes all components except factor VII.

Prepare all dilutions in plastic tubes and use within 1 h.

Step 1. Mix dilutions of the factor VII reference preparation and the preparation to be examined with an appropriate volume of the prewarmed coagulation factor reagent or a combination of its separate constituents, and incubate the mixture in plastic tubes or microplate wells at 37 °C. The concentrations of the various components during the factor Xa generation must be as specified above under the description of the reagents.

Allow the activation of factor X to proceed for a suitable time, usually terminating the reaction before the factor Xa concentration has reached its maximal level in order to obtain a satisfactory linear dose-response relationship. The activation time is also chosen to achieve linear production of factor Xa in time. Appropriate activation times are usually between 2 min and 5 min, but deviations are permissible if acceptable linearity of the dose-response relationship is thus obtained.

Step 2. Terminate the activation by the addition of a prewarmed reagent containing a chromogenic substrate. Quantify the rate of substrate cleavage, which must be linear with the concentration of factor Xa formed, by measuring the absorbance change at an appropriate wavelength using a spectrophotometer, either monitoring the absorbance continuously, thus allowing the initial rate of substrate cleavage to be calculated, or terminating the hydrolysis reaction after a suitable interval by lowering the pH by the addition of a suitable reagent, such as acetic acid (500 g/L $C_2H_4O_2$) or a citrate solution (1 mol/L) at pH 3. Adjust the hydrolysis time to achieve a linear development of chromophore with time. Appropriate hydrolysis times are usually between 3 min and 15 min, but deviations are permissible if better linearity of the dose-response relationship is thus obtained.

Check the validity of the assay and calculate the potency of the test preparation by the usual statistical methods (for example, *5.3*).

01/2008:20711

2.7.11. ASSAY OF HUMAN COAGULATION FACTOR IX

The principle of the assay is to measure the ability of a factor IX preparation to reduce the prolonged coagulation time of factor IX-deficient plasma. The reaction is accelerated by addition of a reagent containing phospholipid and a contact activator, e.g. kaolin, silica or ellagic acid. The potency is assessed by comparing the dose-response curve of the preparation to be examined to that of a reference preparation, calibrated in International Units.

The International Unit is the factor IX activity of a stated amount of the International Standard, which consists of a freeze-dried concentrate of human coagulation factor IX. The equivalence in International Units of the International Standard is stated by the World Health Organization.

Human coagulation factor IX concentrate BRP is calibrated in International Units by comparison with the International Standard.

Reconstitute separately the preparation to be examined and the reference preparation as stated on the label and use immediately. Where applicable, determine the amount of heparin present (*2.7.12*) and neutralise the heparin, for example by addition of *protamine sulfate R* (10 µg of protamine sulfate neutralises 1 IU of heparin). Predilute the preparation to be examined and the reference preparation in factor IX-deficient plasma (for example *plasma substrate R2*) to produce solutions containing 0.5-2.0 IU/mL. Prepare at least 3 dilutions for each material, preferably in duplicate, using a suitable buffer solution (for example *imidazole buffer solution pH 7.3 R*) containing 10 g/L of bovine or human albumin. Use these dilutions immediately.

Use an apparatus suitable for measurement of coagulation times or carry out the assay with incubation tubes maintained in a water-bath at 37 °C. Place in each tube 0.1 mL of factor IX-deficient plasma (for example *plasma substrate R2*) and 0.1 mL of one of the dilutions of the reference preparation or of the preparation to be examined. Add to each tube 0.1 mL of a suitable Activated Partial Thromboplastin Time (APTT) reagent containing phospholipid and contact activator and incubate the mixture for a recommended time at 37 °C. To each tube, add 0.1 mL of a 3.7 g/L solution of *calcium chloride R* previously heated to 37 °C. Using a timer, measure the coagulation time, i.e. the interval between the moment of the addition of the calcium chloride and the first indication of the formation of fibrin. The volumes given above may be adapted to the APTT reagent and apparatus used. Calculate the potency using the usual statistical methods (for example, *5.3*).

01/2008:20712

2.7.12. ASSAY OF HEPARIN IN COAGULATION FACTORS

Heparin is assayed as a complex with antithrombin III (AT) via its inhibition of coagulation factor Xa (anti-Xa activity). An excess of AT is maintained in the reaction mixture to ensure a constant concentration of the heparin-AT complex. Factor Xa is neutralised by the heparin-AT complex and the residual factor Xa hydrolyses a specific chromogenic peptide substrate to release a chromophore. The quantity of chromophore is inversely proportional to the activity of the heparin.

Factor Xa chromogenic substrate. Specific chromogenic substrate for factor Xa such as: *N*-benzoyl-L-isoleucyl-L-glutamyl-glycyl-L-arginine-4-nitroanilide hydrochloride. Reconstitute according to the manufacturer's instructions.

Dilution buffer. 6.05 g/L solution of *tris(hydroxymethyl)aminomethane R*. Adjust to pH 8.4 if necessary using *hydrochloric acid R*.

Test solution. Dilute the preparation to be examined with dilution buffer to obtain a solution expected to contain 0.1 IU of heparin per millilitre.

Reference solution. Dilute the heparin reference preparation with dilution buffer to obtain a solution containing 0.1 IU of heparin per millilitre.

The following working conditions apply to microtitre plates. If the assay is carried out in tubes, the volumes are adjusted while maintaining the proportions in the mixture.

Warm all solutions to 37 °C in a water-bath shortly before the test.

Distribute in a series of wells, 20 µL of normal human plasma and 20 µL of *antithrombin III solution R1*. Add to the wells a series of volumes (20 µL, 60 µL, 100 µL and 140 µL) of the test solution or the reference solution and make up the volume in each well to 200 µL using dilution buffer (0.02-0.08 IU of heparin per millilitre in the final reaction mixture).

End-point method. Transfer 40 µL from each well to a second series of wells, add 20 µL of *bovine factor Xa solution R* and incubate at 37 °C for 30 s. Add 40 µL of a 1 mmol/L solution of factor Xa chromogenic substrate and incubate at 37 °C for 3 min. Terminate the reaction by lowering the pH by the addition of a suitable reagent, such as a 20 per cent *V/V* solution of *glacial acetic acid R* and measure the absorbance at 405 nm (*2.2.25*). Appropriate reaction times are usually between 3 min and 15 min, but deviations are permissible if better linearity of the dose-response relationship is thus obtained.

Kinetic method. Transfer 40 µL from each well to a second series of wells, add 20 µL of *bovine factor Xa solution R* and incubate at 37 °C for 30 s. Add 40 µL of a 2 mmol/L solution of factor Xa chromogenic substrate, incubate at 37 °C and measure the rate of substrate cleavage by continuous measurement of the absorbance change at 405 nm (*2.2.25*), thus allowing the initial rate of substrate cleavage to be calculated. This rate must be linear with the concentration of residual factor Xa.

Check the validity of the assay and calculate the heparin activity of the test preparation by the usual statistical methods for a slope-ratio assay (for example, *5.3*).

01/2008:20713
corrected 7.5

2.7.13. ASSAY OF HUMAN ANTI-D IMMUNOGLOBULIN

METHOD A

The potency of human anti-D immunoglobulin is determined by comparing the quantity necessary to produce agglutination of D-positive red blood cells with the quantity of a reference preparation, calibrated in International Units, required to produce the same effect.

The International Unit is the activity contained in a stated amount of the International Reference Preparation. The equivalence in International Units of the International Reference Preparation is stated by the World Health Organization.

Human anti-D immunoglobulin BRP is calibrated in International Units by comparison with the International Standard and intended for use in the assay of human anti-D immunoglobulin.

Use pooled D-positive red blood cells, collected not more than 7 days earlier and suitably stored, obtained from not fewer than 4 group O R_1R_1 donors. To a suitable volume of the cells, previously washed 3 times with a 9 g/L solution of *sodium chloride R*, add an equal volume of *bromelains solution R*, allow to stand at 37 °C for 10 min, centrifuge, remove the supernatant and wash 3 times with a 9 g/L solution of *sodium chloride R*. Suspend 20 volumes of the red blood cells in a mixture of 15 volumes of inert serum, 20 volumes of a 300 g/L solution of *bovine albumin R* and 45 volumes of a 9 g/L solution of *sodium chloride R*. Stand the resulting suspension in iced water, stirring continuously.

Using a calibrated automated dilutor, prepare suitable dilutions of the preparation to be examined and of the reference preparation using as diluent a solution containing 5 g/L of *bovine albumin R* and 9 g/L of *sodium chloride R*.

Use a suitable apparatus for automatic continuous analysis. The following protocol is usually suitable: maintain the temperature in the manifold, except for the incubation coils, at 15.0 °C. Pump into the manifold of the apparatus the red blood cell suspension at a rate of 0.1 mL/min and a 3 g/L solution of *methylcellulose 450 R* at a rate of 0.05 mL/min. Introduce the dilutions of the preparation to be examined and the reference preparation at a rate of 0.1 mL/min for 2 min, followed by the diluent solution at a rate of 0.1 mL/min for 4 min before the next dilution is introduced.

Introduce air at a rate of 0.6 mL/min. Incubate at 37 °C for 18 min and then disperse the rouleaux by introducing at a rate of 1.6 mL/min a 9 g/L solution of *sodium chloride R* containing a suitable wetting agent (for example, *polysorbate 20 R* at a final concentration of 0.2 g/L) to prevent disruption of the bubble pattern. Allow the agglutinates to settle and decant twice, first at 0.4 mL/min and then at 0.6 mL/min. Lyse the unagglutinated red blood cells with a solution containing 5 g/L of *octoxinol 10 R*, 0.2 g/L of *potassium ferricyanide R*, 1 g/L of *sodium hydrogen carbonate R* and 0.05 g/L of *potassium cyanide R* at a rate of 2.5 mL/min. A 10-minute delay coil is introduced to allow for conversion of the haemoglobin. Continuously record the absorbance (*2.2.25*) of the haemolysate at a wavelength between 540 nm and 550 nm. Determine the range of antibody concentrations over which there is a linear relationship between the concentration and the resultant change in absorbance (ΔA). From the results, prepare a standard curve and use the linear portion of the curve to determine the activity of the preparation to be examined.

Calculate the potency of the preparation to be examined using the usual statistical methods (*5.3*).

METHOD B

The potency of human anti-D immunoglobulin is determined by competitive enzyme-linked immunoassay on erythrocyte-coated microtitre plates. The method is based on the competitive binding between a polyclonal anti-D immunoglobulin preparation and a biotinylated monoclonal anti-D antibody directed against a D-antigen-specific epitope. The activity of the preparation to be examined is compared with a reference preparation calibrated in International Units.

The International Unit is the activity of a stated amount of International Reference Preparation. The equivalence in International Units of the International Reference Preparation is stated by the World Health Organization.

Human anti-D immunoglobulin BRP is calibrated in International Units by comparison with the International Standard and intended for use in the assay of human anti-D immunoglobulin.

MATERIALS

Reagents not specified are of analytical grade.

PBS (Phosphate-buffered saline). Dissolve 8.0 g of *sodium chloride R*, 0.76 g of *anhydrous disodium hydrogen phosphate R*, 0.2 g of *potassium chloride R*, 0.2 g of *potassium dihydrogen phosphate R* and 0.2 g of *sodium azide R* in *water R* and dilute to 1000 mL with the same solvent.

TBS (Tris-buffered saline). Dissolve 8.0 g of *sodium chloride R* and 0.6 g of *tris(hydroxymethyl)aminomethane R* in *water R*. Adjust to pH 7.2 with *1 M hydrochloric acid* and dilute to 1000 mL with *water R*.

Papain solution. Prepare a solution by stirring 1 g of *papain R* at 37 °C for 30 min in 10 mL of *0.067 M phosphate buffer solution pH 5.4 R*, centrifuge at 10 000 *g* for 5 min and filter through a membrane filter (nominal pore size 0.22 µm). To activate, combine 1 mL of the filtrate with 1 mL of a 48.44 g/L solution of *L-cysteine R* and 1 mL of a 3.72 g/L solution of *sodium edetate R* and dilute to 10 mL with *0.067 M phosphate buffer solution pH 5.4 R*. Freeze in aliquots at – 20 °C or below.

Red blood cells. Use pooled D-positive red blood cells obtained from not fewer than 3 group O R_2R_2 donors. Wash the cells 4 times with PBS. Centrifuge the cells at 1800 *g* for 5 min, mix a suitable volume of prewarmed packed cells with a suitable volume of prewarmed papain solution (2 volumes to 1 volume has been found suitable) and incubate at 37 °C for 10 min. Wash the cells 4 times with PBS. Store at 4 °C in an appropriate stabiliser for up to 1 week.

Biotinylated Brad-5. Use according to instructions.

Alkaline phosphatase-conjugated avidin/streptavidin reagent. Preferably modified to combine high specific activity with low non-specific binding. Use according to instructions.

Substrate solution. Use *para*-nitrophenyl phosphate according to instructions.

Cell fixation buffer. Dissolve 18.02 g of *glucose R*, 4.09 g of *sodium chloride R*, 1.24 g of *boric acid R*, 10.29 g of *sodium citrate R* and 0.74 g of *sodium edetate R* in *water R*. Adjust to pH 7.2-7.3 using *1 M sodium hydroxide* or *1 M hydrochloric acid*, and dilute to 1000 mL with *water R*. Use directly from storage at 4 °C.

Glutaraldehyde solution. Immediately before use, add 750 µL of a 250 g/L solution of *glutaraldehyde R* to 50 mL of cold PBS.

Microtitre plates. Plates to be coated with red blood cells are flat-bottomed polystyrene plates with surface properties optimised for enzyme immunoassay and high protein-binding capacity. Plates used to prepare immunoglobulin dilutions are U- or V-bottomed polystyrene or poly(vinyl chloride) plates.

METHOD

Prepare a 0.1 per cent *V/V* suspension of papain-treated red blood cells in cold cell-fixation buffer. Pipette 50 µL into each well of the flat-bottomed microtitre plate.

Centrifuge the plate at 350 *g* for 3 min, preferably at 4 °C. Without removing the supernatant, gently add 100 µL of glutaraldehyde solution to each well and leave for 10 min.

Drain the wells by quickly inverting the plate and wash 3 times with 250-300 µL of PBS. This may be done manually or using a suitable automated plate washer. Either carry out the assay as described below, or store the plate at 4 °C after draining off the PBS and adding 100 µL of cell-fixation buffer per well and sealing with plastic film. Plates can be stored at 4 °C for up to 1 month.

Test solutions. For freeze-dried preparations, reconstitute as stated on the label. Prepare 4 independent replicates of 5 serial 2-fold dilutions starting with 30 IU/mL in PBS containing 10 g/L of *bovine albumin R*. If necessary, adjust the starting dilution to obtain responses falling in the linear portion of the dose-response curve.

Reference solutions. Reconstitute the reference preparation according to instructions. Prepare 4 independent replicates of 5 serial 2-fold dilutions starting with 30 IU/mL in PBS containing 10 g/L of *bovine albumin R*.

Using U- or V-bottomed microtitre plates, add 35 µL of each of the dilutions of the test solution or reference solution to each of a series of wells. To each well add 35 µL of biotinylated Brad-5 at 250 ng/mL.

Empty the wells of the red cell-coated plate by inverting and draining on a paper towel. Add 250 µL of PBS containing 20 g/L of *bovine albumin R* and leave at room temperature for 30 min.

Empty the wells of the red cell-coated plate by inverting and draining on a paper towel and transfer 50 µL from each of the dilutions of the test solution or reference solution containing biotinylated Brad-5 into the wells. Use 50 µL of PBS containing 10 g/L of *bovine albumin R* as negative control. Seal the plate with plastic film and incubate at room temperature for 1 h.

Remove the liquid from the wells of the red cell-coated plate and wash 3 times with 250-300 µL of TBS.

Dilute the alkaline phosphatase-conjugated avidin/streptavidin reagent in TBS containing 10 g/L of *bovine albumin R* and add 50 µL to each well. Incubate for 30 min at room temperature.

Remove the liquid from the wells of the red cell-coated plate and wash 3 times with 250-300 µL of TBS.

Add 100 µL of substrate solution to each of the wells and incubate at room temperature for 10 min in the dark. To stop the reaction, add 50 µL of *3 M sodium hydroxide* to each of the wells.

Measure the absorbances at 405 nm and substract the negative control reading. Use the absorbance values in the linear range of the titration curve to estimate the potency of the preparation to be examined by the usual statistical methods (*5.3*).

METHOD C

The potency of human anti-D immunoglobulin is determined by flow cytometry in a microtitre plate format. The method is based on the specific binding between anti-D immunoglobulin and D-positive red blood cells. The activity of the preparation to be examined is compared with a reference preparation calibrated in International Units.

The International Unit is the activity of a stated amount of International Reference Preparation. The equivalence in International Units of the International Reference preparation is stated by the World Health Organization.

Human anti-D immunoglobulin BRP is calibrated in International Units by comparison with the International Standard and intended for use in the assay of human anti-D immunoglobulin.

MATERIALS

Reagents not specified are of analytical grade.

PBS. Dissolve 8.0 g of *sodium chloride R*, 0.76 g of *disodium hydrogen phosphate R*, 0.2 g of *potassium chloride R* and 0.2 g of *potassium dihydrogen phosphate R* in *water R* and dilute to 1000 mL with the same solvent.

PBS-BSA solution. PBS containing 10.0 g/L of *bovine albumin R*.

Red blood cells. Use D-positive red blood cells obtained from a group O R_1R_1 donor within 2 weeks of collection. Store if necessary in an appropriate stabiliser at 4 °C. Wash the cells at least twice with PBS-BSA solution and prepare a suspension containing 1×10^4 cells per microlitre but not more than 5×10^4 cells per microlitre in PBS-BSA solution.

Use D-negative red blood cells obtained from a group O rr donor and prepared similarly.

Secondary antibody. Use a suitable fluorescent dye-conjugated anti-IgG antibody fragment specific for human IgG or parts of it. Store and use according to the manufacturer's instructions.

Microtitres plates. Use flat-bottomed plates without surface treatment for enzyme immunoassays.

METHOD

Test solutions. For freeze-dried preparations, reconstitute as stated on the label. Prepare at least 3 independent replicates of at least 3 serial 1.5- or 2-fold dilutions starting with a concentration in the range of 1.2-0.15 IU/mL using PBS/BSA solution as diluent. If necessary, adjust the starting dilution to obtain responses falling in the linear portion of the dose-response curve.

Reference solutions. Reconstitute the reference preparation according to instructions. Prepare at least 3 independent replicates of at least 3 serial 1.5- or 2-fold dilutions starting with a concentration in the range of 1.2-0.15 IU/mL using PBS-BSA solution as diluent. If necessary, adjust the starting dilution to obtain responses falling in the linear portion of the dose-response curve.

Distribute 50 µL of the D-positive red blood cells into each well of a microtitre plate. Add 50 µL of each of the dilutions of the test solution or reference solution to each of a series of wells. Use 50 µL of PBS-BSA solution as negative control. Distribute 50 µL of the D-negative red blood cells into 4 wells of the same microtitre plate and add 50 µL of the lowest dilution of the test preparation. To monitor spurious reactions, distribute 50 µL of the D-positive red blood cells into 4 wells of the same microtitre plate and add 50 µL of PBS-BSA solution. Seal with plastic film and incubate at 37 °C for 40 min.

Centrifuge the plates at 50 *g* for 3 min, discard the supernatant and wash the cells with 200-250 µL of PBS-BSA solution. Repeat this at least once.

Centrifuge the plates at 50 *g* for 3 min, discard the supernatant and add 50 µL of the secondary antibody diluted with PBS-BSA solution to a suitable protein concentration. Seal with plastic film and incubate, protected from light, at room temperature for 20 min.

Centrifuge the plates at 50 *g* for 3 min, discard the supernatant and wash the cells with 200-250 µL of PBS-BSA solution. Repeat this at least once.

Centrifuge the plates at 50 *g* for 3 min, resuspend the cells into 200-250 µL of PBS. Transfer the cell suspension into a tube suitable for the flow-cytometry equipment available and further dilute by adding PBS to allow a suitable flow rate.

Proceed immediately with measurement of the median fluorescence intensity in a flow cytometer. Record at least 10 000 events without gating but excluding debris.

Use the median fluorescence intensity in the linear range of the dose-response curve to estimate the potency of the preparation to be examined by the usual statistical methods (*5.3*).

01/2011:20714

2.7.14. ASSAY OF HEPATITIS A VACCINE

The assay of hepatitis A vaccine is carried out either *in vivo*, by comparing in given conditions its capacity to induce specific antibodies in mice with the same capacity of a reference preparation, or *in vitro*, by an immunochemical determination of antigen content.

IN VIVO ASSAY

The test in mice shown below is given as an example of a method that has been found suitable for a given vaccine; other validated methods may also be used.

Selection and distribution of the test animals. Use in the test healthy mice from the same stock, about 5 weeks old and from a strain shown to be suitable. Use animals of the same sex. Distribute the animals in at least 7 equal groups of a number suitable for the requirements of the assay.

Determination of potency of the vaccine to be examined. Using a 9 g/L solution of *sodium chloride R* containing the aluminium adjuvant used for the vaccine, prepare at least 3 dilutions of the vaccine to be examined and matching dilutions of the reference preparation. Allocate the dilutions one to each of the groups of animals and inject subcutaneously not more than 1.0 mL of each dilution into each animal in the group to which that dilution is allocated. Maintain a group of unvaccinated controls, injected subcutaneously with the same volume of diluent. After 28 to 32 days, anaesthetise and bleed all animals, keeping the individual sera separate. Assay the individual sera for specific antibodies against hepatitis A virus by a suitable immunochemical method (*2.7.1*).

Calculations. Carry out the calculations by the usual statistical methods for an assay with a quantal response (*5.3*).

From the distribution of reaction levels measured on all the sera in the unvaccinated group, determine the maximum reaction level that can be expected to occur in an unvaccinated animal for that particular assay. Any response in vaccinated animals that exceeds this level is by definition a seroconversion.

Make a suitable transformation of the percentage of animals showing seroconversion in each group (for example, a probit transformation) and analyse the data according to a parallel-line log dose-response model. Determine the potency of the test preparation relative to the reference preparation.

Validity conditions. The test is not valid unless:

- for both the test and the reference vaccine, the ED_{50} lies between the smallest and the largest doses given to the animals;
- the statistical analysis shows no significant deviation from linearity or parallelism;
- the confidence limits ($P = 0.95$) are not less than 33 per cent and not more than 300 per cent of the estimated potency.

Potency requirement. The upper confidence limit ($P = 0.95$) of the estimated relative potency is not less than 1.0.

IN VITRO ASSAY

Carry out an immunochemical determination (*2.7.1*) of antigen content with acceptance criteria validated against the *in vivo* test. The acceptance criteria are approved for a given reference preparation by the competent authority in the light of the validation data.

Hepatitis A vaccine (inactivated, non-adsorbed) BRP is suitable for use as a reference preparation.

01/2012:20715

2.7.15. ASSAY OF HEPATITIS B VACCINE (rDNA)

The assay of hepatitis B vaccine (rDNA) is carried out either *in vivo*, by comparing in given conditions its capacity to induce specific antibodies against hepatitis B surface antigen (HBsAg) in mice or guinea-pigs with the same capacity of a reference preparation, or *in vitro*, by an immunochemical determination of the antigen content.

IN VIVO ASSAY

Selection and distribution of the test animals. Use in the test healthy mice from the same stock, about 5 weeks old. The strain of mice used for this test must give a significant slope for the dose-response curve to the antigen; mice with haplotype H-2^q or H-2^d are suitable. Healthy guinea-pigs weighing 300 g to 350 g (about 7 weeks old) from the same stock are also suitable. Use animals of the same sex. Distribute the animals in at least 7 equal groups of a number appropriate to the requirements of the assay.

Determination of potency of the vaccine to be examined. Using a 9 g/L solution of *sodium chloride R* containing the aluminium adjuvant used for the vaccine or another appropriate diluent, prepare at least 3 dilutions of the vaccine to be examined and matching dilutions of the reference preparation. Allocate the dilutions, 1 to each of the groups of animals, and inject intraperitoneally not more than 1.0 mL of each dilution into each animal in the group to which that dilution is allocated. One group of animals remains unvaccinated and is injected intraperitoneally with the same volume of diluent. After an appropriate time interval (for example, 4-6 weeks), anaesthetise and bleed the animals, keeping the individual sera separate. Assay the individual sera for specific antibodies against HBsAg by a suitable immunochemical method (*2.7.1*).

Calculations. Calculations are carried out by the usual statistical methods for an assay with a quantal response (*5.3*).

From the distribution of reaction levels measured on all the sera in the unvaccinated group, the maximum reaction level that can be expected to occur in an unvaccinated animal for that particular assay is determined. Any response in vaccinated animals that exceeds this level is by definition a seroconversion.

Make a suitable transformation of the percentage of animals showing seroconversion in each group (for example, a probit transformation) and analyse the data according to a parallel-line log dose-response model. Determine the potency of the test preparation relative to the reference preparation.

Validity conditions. The test is not valid unless:

- for both the test and the reference vaccine, the ED_{50} lies between the smallest and the largest doses given to the animals;
- the statistical analysis shows no significant deviation from linearity or parallelism;
- the confidence limits ($P = 0.95$) are not less than 33 per cent and not more than 300 per cent of the estimated potency.

Potency requirement. The upper confidence limit ($P = 0.95$) of the estimated relative potency is not less than 1.0.

IN VITRO ASSAY

Carry out an immunochemical determination (*2.7.1*) of antigen content with acceptance criteria validated against the *in vivo* test.

Enzyme-linked immunosorbent assay (ELISA) and radio-immunoassay (RIA) using monoclonal antibodies specific for protection-inducing epitopes of HBsAg have been shown to be suitable. Suitable numbers of dilutions of the vaccine to be examined and the reference preparation are used and a parallel-line model is used to analyse the data, which may be suitably transformed. Kits for measuring HBsAg *in vitro* are commercially available and it is possible to adapt their test procedures for use as an *in vitro* potency assay.

The acceptance criteria are approved for a given reference preparation by the competent authority in light of the validation data.

07/2012:20716

2.7.16. ASSAY OF PERTUSSIS VACCINE (ACELLULAR)

The capacity of the vaccine to induce the formation of specific antibodies in mice or guinea-pigs is compared with the same capacity of a reference preparation examined in parallel; antibodies are determined using a suitable immunochemical method (*2.7.1*) such as enzyme-linked immunosorbent assay (ELISA).

For combinations containing pertussis components together with diphtheria and tetanus components, the serological assay in guinea-pigs can be performed with the same group of animals used for the serological assay of diphtheria vaccine (adsorbed) (*2.7.6*) and of tetanus vaccine (adsorbed) (*2.7.8*) when the common immunisation conditions for all components (for example, doses, duration) have been demonstrated to be valid for the combined vaccine. The guinea-pig model allows for a further reduction in the number of animals required and must be considered by each analyst in accordance with the provisions of the European Convention for the Protection of Vertebrate Animals Used for Experimental and Other Scientific Purposes.

The design of the assays A and B described below uses multiple dilutions for the test and reference preparations. After validation for a given vaccine, it is possible to apply a simplified model such as a single dilution for both test and reference preparations. Such a model enables the analyst to determine whether the immunogenicity of the test preparation is comparable to the reference vaccine, but does not give information on linearity or parallelism of the dose-response curves.

For serological assays, suitable indicators to monitor test consistency are:

- the mean and standard deviation of relative antibody levels or scores of the serum samples obtained after administration of a fixed dose of the vaccine reference preparation;
- the antibody levels or scores of run controls (reference antiserum and negative serum samples);
- the ratio of antibody levels or scores for the reference antiserum to the serum samples corresponding to the reference vaccine.

Where a single-dilution assay is used, production and test consistency over time are monitored via suitable indicators and by carrying out a full multiple-dilution assay periodically, for example every 2 years.

METHOD A. SEROLOGY IN MICE

Reference vaccine. A batch of vaccine shown to be effective in clinical trials or a batch representative thereof is used as a reference vaccine. For the preparation of a representative batch, strict adherence to the production process used for the batch tested in clinical trials is necessary. The stability of the reference vaccine shall be monitored and documented.

Reference antiserum. A reference antiserum of assigned activity is used in the test and serves as the basis for calculation of the antibody levels in the test sera. *Bordetella pertussis mouse antiserum BRP* is suitable for use as a reference antiserum.

The following test model is given as an example of a method that has been found to be satisfactory.

Selection and distribution of the test animals. Use in the test healthy mice (for example, CD1 strain) of the same stock, about 5 weeks old. Distribute the animals in 6 groups of a number appropriate to the requirements of the assay. Use 3 dilutions of the vaccine to be examined and 3 dilutions of a reference preparation and attribute each dilution to a group of mice. Inject intraperitoneally or subcutaneously into each mouse 0.5 mL of the dilution attributed to its group. During validation studies a further group of mice may be used as a negative control by injecting the animals with diluent alone.

Collection of serum samples. 4-5 weeks after vaccination, bleed the mice individually under anaesthesia. Store the sera at – 20 °C until used for antibody determination.

Antibody determination. Assay the individual sera for content of specific antibodies to each acellular pertussis antigen using a validated method such as the ELISA test shown below.

ELISA test. Microtitre plates (poly(vinyl chloride) or polystyrene as appropriate for the specific antigen) are coated with the purified antigen at a concentration of 100 ng per well. After washing, unreacted sites are blocked by incubating the plates with a solution of bovine serum albumin and then washed. 2-fold dilutions of sera from individual mice immunised with test or reference vaccines are made on the plates. Reference antiserum is included on each plate. After incubation at 22-25 °C for 1 h, the plates are washed. A suitable solution of enzyme-conjugated anti-mouse IgG antibody is added to each well and incubated at 22-25 °C for 1 h. After washing, a chromogenic substrate is added from which the bound enzyme conjugate liberates a chromophore that can be quantified by measurement of absorbance (*2.2.25*).

Calculations. The antibody titres in the sera of mice immunised with reference and test vaccines are calculated for each acellular pertussis antigen using the reference antiserum, and from the values obtained the relative potency of the test vaccine in relation to the reference vaccine is calculated by the usual statistical methods (*5.3*).

The assay is not valid unless:

- the confidence limits (P = 0.95) are not less than 50 per cent and not more than 200 per cent of the relative potency estimate for each acellular pertussis antigen;
- the statistical analysis shows a significant slope and no deviation from linearity and parallelism of the dose-response curves (chapter *5.3* describes possible alternatives if significant deviations are observed).

METHOD B. SEROLOGY IN GUINEA-PIGS

Selection and distribution of the test animals. Use in the test healthy guinea-pigs from the same stock, each weighing 250-350 g. Use guinea-pigs of the same sex or with males and females equally distributed between the groups. Distribute the guinea-pigs in not fewer than 6 equal groups; use groups containing a number of animals sufficient to obtain results that fulfil the requirements for a valid assay prescribed below. During validation studies a further group of guinea-pigs is used as a negative control by injecting the animals with diluent alone.

Reference vaccine. A batch of vaccine shown to be effective in clinical trials or a batch representative thereof is used as a reference vaccine. For the preparation of a representative batch, strict adherence to the production process used for the batch tested in clinical trials is necessary. The stability of the reference vaccine shall be monitored and documented.

Reference antiserum. An in-house guinea-pig reference antiserum of assigned activity is used in the test and serves as the basis for calculation of the antibody levels in the test sera.

Dilution of the test and reference preparations. Using a 9 g/L solution of *sodium chloride R* as diluent, prepare serial dilutions of the vaccine to be examined and the reference preparation; series differing by 2.5- to 5-fold steps have been found to be suitable. Use not fewer than 3 dilutions within the range found to be suitable for all the components in the vaccine to be examined. Use the dilutions for immunisation preferably within 1 h of preparation. Allocate 1 dilution to each group of guinea-pigs.

Immunisation. Inject subcutaneously into each guinea-pig 1.0 mL of the dilution allocated to its group.

Blood sampling. 35-42 days (5-6 weeks) after immunisation, take a blood sample from each vaccinated and negative control guinea-pig using a suitable method. Store the sera at – 20 °C until used for antibody determination. Avoid frequent freezing and thawing of serum samples.

Antibody determination. Assay the individual sera for content of specific antibodies to each acellular pertussis antigen using a validated method such as the ELISA test shown below.

ELISA test. Suitable 96-well microtitre plates are coated with the purified antigens (e.g. pertussis toxin (PT), pertactin (PRN), filamentous haemagglutinin (FHA) and/or fimbrial agglutinogens (Fim 2/3)) representing components in the combined vaccine at a concentration of 200-400 ng per well. After washing, unreacted sites are blocked by incubating the plates with a suitable blocking buffer and then washed. 2-fold dilutions of sera from individual guinea-pigs immunised with test or reference vaccines are made on the plates. Reference antiserum is included on each plate. After incubation at 37 °C for 1 h, the plates are washed. A suitable solution of enzyme-conjugated anti-guinea-pig IgG antibody is added to each well and incubated at 37 °C for 1 h. After washing, a chromogenic substrate is added from which the bound enzyme conjugate liberates a chromophore that can be quantified by measurement of absorbance (*2.2.25*).

Calculations. The antibody titres in the sera of guinea-pigs immunised with reference and test vaccines are calculated for each acellular pertussis antigen using the reference antiserum, and from the values obtained the relative potency of the test vaccine in relation to the reference vaccine is calculated by the usual statistical methods (*5.3*).

The assay is not valid unless:

- the confidence limits (P = 0.95) are not less than 50 per cent and not more than 200 per cent of the relative potency estimate for each acellular pertussis antigen;
- the statistical analysis shows a significant slope and no deviation from linearity and parallelism of the dose-response curves (chapter *5.3* describes possible alternatives if significant deviations are observed).

The following section is published for information.

Assay of pertussis vaccine (acellular): guidelines

METHOD B. DETERMINATION OF ANTIBODIES IN GUINEA-PIGS

The ELISA shown below is given as an example of an immunochemical method that has been found to be suitable.

Determination of antibody titre by ELISA method for pertussis toxin (PT), filamentous haemagglutinin (FHA), fimbrial agglutinogens (Fim 2/3) and pertactin (PRN). 2-fold dilutions of sera from test and reference vaccines are made on ELISA plates coated with acellular pertussis antigens (PRN, PT, FHA or Fim 2/3). A guinea-pig reference antiserum

and a negative guinea-pig serum are included on each plate. Peroxidase-conjugated rabbit or goat antibody directed against guinea-pig IgG is added, followed by a peroxidase substrate. Optical density is measured and the relative antibody titre is calculated by the usual statistical methods (*5.3*).

Reagents and equipment:

- *ELISA plates*: 96 wells, columns 1-12, rows A-H.
- *Reference antiserum* (guinea-pig).
- *Peroxidase conjugate*. Peroxidase-conjugated rabbit or goat antibody directed against guinea-pig IgG.
- *Bordetella pertussis antigens* (PRN, PT, FHA or Fim 2/3).
- *Carbonate coating buffer pH 9.6*. Dissolve 1.59 g of *anhydrous sodium carbonate R* and 2.93 g of *sodium hydrogen carbonate R* in 1000 mL of *water R*. Distribute into 150 mL bottles and sterilise by autoclaving at 121 °C for 15 min.
- *Phosphate-buffered saline pH 7.4 (PBS)*. Dissolve with stirring 80.0 g of *sodium chloride R*, 2.0 g of *potassium dihydrogen phosphate R*, 14.3 g of *disodium hydrogen phosphate dihydrate R* and 2.0 g of *potassium chloride R* in 1000 mL of *water R*. Store at room temperature to prevent crystallisation. Dilute 10-fold with *water R* before use.
- *Citric acid solution*. Dissolve 10.51 g of *citric acid R* in 1000 mL of *water R* and adjust to pH 4.0 with a 400 g/L solution of *sodium hydroxide R*.
- *Washing buffer*. PBS containing 0.5 g/L of *polysorbate 20 R*.
- *Diluent block buffer*. PBS containing 0.5 g/L of *polysorbate 20 R* and 25 g/L of dried skimmed milk.
- *Peroxidase substrate*. Shortly before use, dissolve 10 mg of *diammonium 2,2'-azinobis(3-ethylbenzothiazoline-6-sulfonate) R* (ABTS) in 20 mL of the citric acid solution. Immediately before use add 5 µL of *strong hydrogen peroxide solution R*.

Method. The description below is given as an example of a suitable plate layout but others may be used. Wells 1A-H are used for negative control serum. Wells 2-12 A-H are used for guinea-pig reference antiserum (usually in 2 positions) and individual sera from guinea-pigs immunised with the test or reference vaccine.

Coat each well of the ELISA plates with 100 µL of the appropriate antigen solution (PT, FHA and Fim 2/3 at 2 µg/mL and PRT at 4 µg/mL, in carbonate coating buffer pH 9.6). Allow to stand overnight at 4 °C in a humid atmosphere. To avoid temperature gradient effects, do not stack more than 4 plates high. On the following day, wash the plates thoroughly with the washing buffer. Block the plates by addition of 150 µL of the diluent block buffer to each well. Incubate in a humid atmosphere at 37 °C for 1 h. Wash the plates thoroughly with the washing buffer. Place 100 µL of the diluent block buffer in each well of the plates, except those of row A. Prepare suitable dilutions of individual test and reference vaccine serum samples, reference antiserum and negative control serum samples. Allocate the negative control serum to column 1, the reference antiserum to at least 2 other columns and individual test and reference vaccine sera to the remaining columns and add 100 µL of each serum to the first 2 wells of the column to which it is allocated. Using a multichannel micropipette, make 2-fold serial dilutions from row B down the plate to row H, by transferring 100 µL from one well to the next. Discard 100 µL from the last row so that all wells contain 100 µL. Incubate at 37 °C for 2 h. Wash thoroughly with the washing buffer. Prepare a suitable dilution of the peroxidase conjugate in the diluent block buffer and add 100 µL to each well. Incubate at 37 °C in a humid atmosphere for 1 h. Wash the plates thoroughly with the washing buffer. Add 100 µL of the peroxidase substrate to each well. Allow to stand at room temperature, protected from light, for 30 min. Read the plates at 405 nm in the same order as the addition of substrate was made.

01/2008:20717

2.7.17. ASSAY OF HUMAN ANTITHROMBIN III

The antithrombin III content of the preparation to be examined is determined by comparing its ability to inactivate thrombin in the presence of an excess of heparin with the same ability of a reference preparation of human antithrombin III concentrate calibrated in International Units. Varying quantities of the preparation to be examined are mixed with a given quantity of thrombin and the remaining thrombin activity is determined using a suitable chromogenic substrate.

The International Unit is the activity of a stated amount of the International Standard for human antithrombin III concentrate. The equivalence in International Units of the International Standard is stated by the World Health Organization.

Method. Prepare 2 independent series of 3 or 4 dilutions in the range 1/75 to 1/200 from 1 IU/mL, for both the preparation to be examined and the reference preparation, using *tris-EDTA BSA buffer solution pH 8.4 R* containing 15 IU of heparin per millilitre.

Warm 200 µL of each dilution at 37 °C for 1-2 min. Add to each dilution 200 µL of a solution of *bovine thrombin R* containing 2 IU/mL in *tris-EDTA BSA buffer solution pH 8.4 R*. Mix and maintain at 37 °C for exactly 1 min. Add 500 µL of a suitable chromogenic substrate (for example, D-phenylalanyl-L-pipecolyl-L-arginine-4-nitroanilide, reconstituted in *water R* to give a solution containing 4 mmol/L and further diluted to a concentration suitable for the assay using *tris-EDTA BSA buffer solution pH 8.4 R* without albumin). Immediately start measurement of the change in absorbance at 405 nm (*2.2.25*), continuing the measurement for at least 30 s. Calculate the rate of change of absorbance (ΔA/min). (Alternatively, an end-point assay may be used by stopping the reaction with acetic acid and measuring the absorbance at 405 nm.)

The rate of change of absorbance (ΔA/min) is inversely proportional to antithrombin III activity.

Check the validity of the assay and calculate the potency of the test preparation by the usual statistical methods (*5.3*).

01/2008:20718

2.7.18. ASSAY OF HUMAN COAGULATION FACTOR II

Human coagulation factor II is assayed following specific activation to form factor IIa. Factor IIa is estimated by comparing its activity in cleaving a specific chromogenic peptide substrate with the same activity of the International Standard or of a reference preparation calibrated in International Units.

The International Unit is the factor II activity of a stated amount of the International Standard which consists of a freeze-dried concentrate of human blood coagulation factor II. The equivalence in International Units of the International Standard is stated by the World Health Organization.

The chromogenic assay method consists of 2 steps: snake venom-dependent activation of factor II, followed by enzymatic cleavage of a chromogenic factor IIa substrate to form a chromophore that can be quantified spectrophotometrically. Under appropriate assay conditions, there is a linear relation between factor IIa activity and the cleavage of the chromogenic substrate.

REAGENTS

Viper venom specific factor II activator (Ecarin). A protein derived from the venom of the saw-scaled viper (*Echis carinatus*) which specifically activates factor II. Reconstitute according to the manufacturer's instructions. Store the reconstituted preparation at 4 °C and use within 1 month.

Factor IIa chromogenic substrate. Specific chromogenic substrate for factor IIa such as: *H*-D-phenylalanyl-L-pipecolyl-L-arginine-4-nitroanilide dihydrochloride, 4-toluenesulfonyl-glycyl-prolyl-L-arginine-4-nitroanilide, *H*-D-cyclohexylglycyl- -aminobutyryl-L-arginine-4-nitroanilide, D-cyclohexylglycyl-L-alanyl-L-arginine-4-nitroanilide diacetate. Reconstitute according to the manufacturer's instructions.

Dilution buffer. Solution containing 6.06 g/L of *tris(hydroxymethyl)aminomethane R*, 17.53 g/L of *sodium chloride R*, 2.79 g/L of *(ethylenedinitrilo)tetra-acetic acid R* and 1 g/L of *bovine albumin R* or *human albumin R*. Adjust to pH 8.4 if necessary using *hydrochloric acid R*.

METHOD

Test solution. Dilute the preparation to be examined with dilution buffer to obtain a solution containing 0.015 IU of factor II per millilitre. Prepare at least 3 further dilutions in dilution buffer.

Reference solution. Dilute the reference preparation to be examined with dilution buffer to obtain a solution containing 0.015 IU of factor II per millilitre. Prepare at least 3 further dilutions in dilution buffer.

Warm all solutions to 37 °C in a water-bath shortly before the test.

The following working conditions apply to microtitre plates. If the assay is carried out in tubes, the volumes are adjusted while maintaining the proportions in the mixture.

Using a microtitre plate maintained at 37 °C, add 25 µL of each dilution of the test solution or the reference solution to each of a series of wells. To each well add 125 µL of dilution buffer, then 25 µL of ecarin and incubate for exactly 2 min. To each well add 25 µL of factor IIa chromogenic substrate.

Read the rate of change of absorbance (*2.2.25*) at 405 nm continuously over a period of 3 min and obtain the mean rate of change of absorbance (Δ*A*/min). If continuous monitoring is not possible, read the absorbance at 405 nm at suitable consecutive intervals, for instance 40 s, plot the absorbances against time on a linear graph and calculate Δ*A*/min as the slope of the line. From the Δ*A*/min values of each individual dilution of standard and test preparations, calculate the potency of the preparation to be examined and check the validity of the assay by the usual statistical methods (*5.3*).

01/2008:20719

2.7.19. ASSAY OF HUMAN COAGULATION FACTOR X

Human coagulation factor X is assayed following specific activation to form factor Xa. Factor Xa is estimated by comparing its activity in cleaving a specific chromogenic peptide substrate with the same activity of the International Standard or of a reference preparation calibrated in International Units.

The International Unit is the factor X activity of a stated amount of the International Standard which consists of a freeze-dried concentrate of human coagulation factor X. The equivalence in International Units of the International Standard is stated by the World Health Organization.

The chromogenic assay method consists of 2 steps: snake venom-dependent activation of factor X, followed by enzymatic cleavage of a chromogenic factor Xa substrate to form a chromophore that can be quantified spectrophotometrically. Under appropriate assay conditions, there is a linear relation between factor Xa activity and the cleavage of the chromogenic substrate.

REAGENTS

Russell's viper venom specific factor X activator (RVV). A protein derived from the venom of Russell's viper (*Vipera russelli*) which specifically activates factor X. Reconstitute according to the manufacturer's instructions. Store the reconstituted preparation at 4 °C and use within 1 month.

Factor Xa chromogenic substrate. Specific chromogenic substrate for factor Xa such as: *N*- -benzyloxycarbonyl-D-arginyl-L-glycyl-L-arginine-4-nitroanilide dihydrochloride, *N*-benzoyl-L-isoleucyl-L-glutamyl-glycyl-L-arginine-4-nitroanilide hydrochloride, methanesulfonyl-D-leucyl-glycyl-L-arginine-4-nitroanilide, methoxycarbonyl-D-cyclohexylalanyl-glycyl-L-arginine-4-nitroanilide acetate. Reconstitute according to the manufacturer's instructions.

Dilution buffer. Solution containing 3.7 g/L of *tris(hydroxymethyl)aminomethane R*, 18.0 g/L of *sodium chloride R*, 2.1 g/L of *imidazole R*, 0.02 g/L of *hexadimethrine bromide R* and 1 g/L of *bovine albumin R* or *human albumin R*. Adjust to pH 8.4 if necessary using *hydrochloric acid R*.

METHOD

Test solution. Dilute the preparation to be examined with dilution buffer to obtain a solution containing 0.18 IU of factor X per millilitre. Prepare at least 3 further dilutions in dilution buffer.

Reference solution. Dilute the reference preparation to be examined with dilution buffer to obtain a solution containing 0.18 IU of factor X per millilitre. Prepare at least 3 further dilutions in dilution buffer.

Warm all solutions to 37 °C in a water-bath shortly before the test.

The following working conditions apply to microtitre plates. If the assay is carried out in tubes, the volumes are adjusted while maintaining the proportions in the mixture.

Using a microtitre plate maintained at 37 °C, add 12.5 µL of each dilution of the test solution or the reference solution to each of a series of wells. To each well add 25 µL of RVV and incubate for exactly 90 s. To each well add 150 µL of factor Xa chromogenic substrate, diluted 1 in 6 in dilution buffer.

Read the rate of change of absorbance (*2.2.25*) (at 405 nm continuously over a period of 3 min and obtain the mean rate of change of absorbance (Δ*A*/min). If continuous monitoring is not possible, read the absorbance at 405 nm at suitable consecutive intervals, for instance 40 s, plot the absorbances against time on a linear graph and calculate Δ*A*/min as the slope of the line. From the Δ*A*/min values of each individual dilution of standard and test preparations, calculate the potency of the preparation to be examined and check the validity of the assay by the usual statistical methods (*5.3*).

01/2008:20720

2.7.20. *IN VIVO* ASSAY OF POLIOMYELITIS VACCINE (INACTIVATED)

The capacity of the vaccine to induce the formation of neutralising antibodies is determined *in vivo* by one of the following methods.

TEST IN CHICKS OR GUINEA-PIGS

Prepare a suitable series of not fewer than 3 dilutions of the vaccine to be examined using a suitable buffered saline solution. Distribute either guinea-pigs weighing 250-350 g or 3-week-old chicks into groups of 10, and allocate a group to each dilution of the vaccine. Inject intramuscularly into each animal 0.5 mL of the dilution intended for its group. Bleed the animals after 5-6 days and separate the sera. Examine the sera for the presence of neutralising antibodies, at a dilution of 1 in 4, to each of the human poliovirus types 1, 2 and 3. Mix 100 $CCID_{50}$ of virus with the dilution of serum and incubate at 37 °C for 4.5-6 h. Keep at 5 ± 3 °C for 12-18 h where necessary for consistency of results. Inoculate the mixtures into cell cultures for the detection of unneutralised virus and read the results up to 7 days after inoculation. For each group of animals, note the number of sera that have neutralising antibodies and calculate the dilution of the vaccine that gives an antibody response in 50 per cent of the animals. Carry out in parallel a control test using a suitable reference preparation. The vaccine complies with the test if a dilution of 1 to 100 or more produces an antibody response for each of the 3 types of virus in 50 per cent of the animals.

TEST IN RATS

A suitable *in vivo* assay method consists of intramuscular injection into the hind limb(s) of not fewer than 3 dilutions of the vaccine to be examined and a reference vaccine, using for each dilution a group of 10 specific pathogen-free rats of a suitable strain. Use of 4 dilutions is often necessary to obtain valid results for all 3 serotypes. The number of animals per group must be sufficient to obtain results that meet the validity criteria; groups of 10 rats are usually sufficient, although valid results may be obtained with fewer animals per group. If animals of different sex are used, males and females are evenly distributed between all groups. A weight range of 175-250 g has been found to be suitable. An inoculum of 0.5 mL per rat is used. The dose range is chosen such that a dose response to all 3 poliovirus types is obtained. Bleed the animals after 20-22 days. Neutralising titres against all 3 poliovirus types are measured separately using 100 $CCID_{50}$ of the Sabin strains as challenge viruses, Vero or Hep2 as indicator cells, and neutralisation conditions of 3 h at 35-37 °C followed by 18 h at 2-8 °C where necessary for consistency of results. Results are read following fixation and staining after 7 days of incubation at 35 °C. For a valid antibody assay, the titre of each challenge virus must be shown to be within the range 10 $CCID_{50}$ to 1000 $CCID_{50}$ and the neutralising antibody titre of a control serum must be within 2 twofold dilutions of the geometric mean titre of the serum. The potency is calculated by comparison of the proportion of responders for the vaccine to be examined and the reference vaccine by the probit method or, after validation, using a parallel-line model. For the probit method it is necessary to establish a cut-off neutralising antibody titre for each poliovirus type to define a responder. Due to interlaboratory variation, it is not possible to define cut-off values that could be applied by all laboratories. Rather, the cut-off values are determined for each laboratory based on a minimum series of 3 tests with the reference vaccine. The mid-point on a $\log_2$ scale of the minimum and maximum geometric mean titres of the series of 3 or more tests is used as the cut-off value. For each of the 3 poliovirus types, the potency of the vaccine is not significantly less than that of the reference preparation. The test is not valid unless:

- for both the vaccine to be examined and the reference vaccine, the ED_{50} lies between the smallest and the largest doses given to the animals;
- the statistical analysis shows no significant deviation from linearity or parallelism;
- the confidence limits ($P = 0.95$) are not less than 25 per cent and not more than 400 per cent of the estimated potency.

The following section is published for information.

Guideline on waiving of the *in vivo* assay of poliomyelitis vaccine (inactivated) and its combinations

This guideline applies to vaccines derived from wild strains of poliovirus. The validation described should be carried out for each product before waiving of the in vivo assay, and should be repeated wherever there is a substantial change to the manufacturing process that may affect the in vitro or in vivo assays.

The European convention on the protection of vertebrate animals used for experimental and other scientific purposes requires that tests in animals shall not be carried out if a scientifically satisfactory alternative is reasonably and practically available. The aim of this guideline is therefore to promote waiving of the *in vivo* assay wherever it can be shown for a given product that the *in vitro* assay (D-antigen determination) gives sufficient assurance of satisfactory potency for routine batch control.

For the *in vivo* assay, the test in rats is considered to be the method of choice. For vaccines that are assayed using chicks or guinea-pigs and that have an established record of production history, the *in vivo* assay may be waived if the rat assay is also applied to the batches included in the validation study described below. For vaccines not yet approved, the results of the rat assay on all final bulks should be included in all data generated for demonstration of consistency of production before waiving of the *in vivo* assay.

Once the *in vivo* assay has been waived, batches of vaccine will be released on the basis of the *in vitro* assay, and the *in vivo* assay should not be used as an alternative for the release of a batch that fails the *in vitro* assay. Repetition of the *in vitro* assay may be performed according to an authorised procedure.

PROCEDURE

The following conditions should be met before performance of the validation study:

- appropriate experience of the rat assay;
- full validation of the D-antigen assay (linearity, repeatability, intermediate precision, accuracy and limits of quantification);
- establishment of acceptance criteria for the D-antigen assay based on a suitable number of consecutive final lots;
- establishment of production consistency on recent final bulks using the currently approved *in vivo* assay; the final bulks should correspond to the final lots used to establish the acceptance criteria for the D-antigen assay and should represent different inactivated harvests of each of the 3 types of poliovirus.

The validation study should be performed on:

- a final bulk/lot that is representative of the current production method;
- 2 sub-potent batches prepared, for example, by heating normal vaccine or mixing it with heat-treated vaccine; the sub-potent batches should have expected titres of about half that of the representative final bulk/lot.

These batches are assayed using as reference standard a homologous production batch:

- by the currently approved *in vivo* assay for the vaccine;
- by the rat assay where this is not the currently approved *in vivo* assay;
- by the D-antigen assay.

Waiving of the *in vivo* assay is acceptable if the representative final bulk/lot complies with the *in vivo* and *in vitro* assays and the sub-potent batches fail to comply. If a sub-potent batch fails to comply with the D-antigen assay but complies with the *in vivo* assay, the latter may be repeated.

01/2008:20721

2.7.21. ASSAY OF HUMAN VON WILLEBRAND FACTOR

The biological functions of human von Willebrand factor are numerous. At present, its ristocetin cofactor activity and its collagen binding activity can be utilised for assays. The potency of human von Willebrand factor is determined by comparing, in given conditions, its activity with the same activity of a reference preparation calibrated against the International Standard, in International Units where applicable.

The International Unit is the activity of a stated amount of the International Standard, which consists of a freeze-dried human von Willebrand factor concentrate. The equivalence in International Units of the International Standard is stated by the World Health Organization (WHO).

RISTOCETIN COFACTOR ASSAY

The ristocetin cofactor activity of von Willebrand factor is determined by measuring agglutination of a suspension of platelets in the presence of ristocetin A. The assay can be carried out for quantitative determinations by using automated instruments, or for semi-quantitative determinations by visually assessing the endpoint of agglutination in a dilution series. Quantitative assays are preferred.

REAGENTS

Suspension of platelets. Use standardised and, for example, formaldehyde- or paraformaldehyde-fixed preparations of freshly isolated and washed human platelets. The suspension may also be freeze-dried. An appropriate amount of ristocetin A is added if necessary. Some platelet reagents may already contain ristocetin A.

Reference preparation. The reference preparation for von Willebrand factor is the WHO International Standard for von Willebrand factor concentrate.

METHOD

Semi-quantitative assay. Prepare suitable dilutions of the preparation to be examined and of the reference preparation, using as diluent a solution containing 9 g/L of *sodium chloride R* and 10-50 g/L of *human albumin R*. Add to each dilution an appropriate amount of the suspension of platelets and, if necessary, of ristocetin A. Mix on a glass slide by moving it gently in circles for 1 min. Allow to stand for a further 1 min and read the result against a dark background with side lighting. The last dilution which clearly shows visible agglutination indicates the ristocetin cofactor titre of the sample. Use diluent as a negative control.

Quantitative Assay. Reconstitute the entire contents of 1 ampoule of the reference preparation and the preparation to be examined by adding the appropriate quantity of the recommended diluent (for example *water R*); use immediately. Add sufficient prediluent to the reconstituted preparations to produce solutions containing 0.5-2.0 IU/mL. The prediluent consists of an isotonic non-chelating buffer containing, for example, 1-5 per cent of human or bovine albumin, and tris(hydroxymethyl)aminomethane or imidazole, appropriately buffered.

The test is performed in accordance with the manufacturer's instructions with at least 2 dilution series with as many dilutions as are needed to obtain a total of at least 3 different concentrations in the linear range of the assay.

Check the validity of the assay and calculate the potency of the test preparation using the usual statistical methods (for example, *5.3*).

COLLAGEN-BINDING ASSAY

Collagen-binding is determined by an enzyme-linked immunosorbent assay on collagen-coated microtitre plates. The method is based on the specific binding of von Willebrand factor to collagen fibrils and the subsequent binding of polyclonal anti-von Willebrand factor antibody conjugated to an enzyme, which on addition of a chromogenic substrate yields a product that can be quantitated spectrophotometrically. Under appropriate conditions, there is a linear relationship between von Willebrand factor collagen-binding and absorbance.

REAGENTS

Collagen. Use native equine or human fibrils of collagen type I or III. For ease of handling, collagen solutions may be used.

Collagen diluent. Dissolve 50 g of *glucose R* in *water R*, adjust to pH 2.7-2.9 with *1 M hydrochloric acid* and dilute to 1000 mL with *water R*.

Phosphate-buffered saline (PBS). Dissolve 8.0 g of *sodium chloride R*, 1.05 g of *disodium hydrogen phosphate dihydrate R*, 0.2 g of *sodium dihydrogen phosphate R* and 0.2 g of *potassium chloride R* in *water R*. Adjust to pH 7.2 using *1 M sodium hydroxide* or *1 M hydrochloric acid* and dilute to 1000 mL with *water R*.

Washing buffer. PBS containing 1 g/L of *polysorbate 20 R*.

Blocking reagent. PBS containing 1 g/L of *polysorbate 20 R* and 10 g/L of *bovine albumin R*.

Dilution buffer. PBS containing 1 g/L of *polysorbate 20 R* and 50 g/L of *bovine albumin R*.

Conjugate. Rabbit anti-human von Willebrand factor serum horseradish peroxidase conjugate. Use according to the manufacturer's instructions.

Substrate solution. Immediately before use, dissolve a tablet of *o*-phenylenediamine dihydrochloride and a tablet of urea hydrogen peroxide in 20 mL of *water R* or use a suitable volume of hydrogen peroxide. Protect from light.

Microtitre plates. Flat-bottomed polystyrene plates with surface properties optimised for enzyme immunoassay and high protein-binding capacity.

METHOD

Test solutions. Reconstitute the preparation to be examined as stated on the label. Dilute with dilution buffer to produce a solution containing approximately 1 IU of von Willebrand factor. Prepare 2 series of at least 3 further dilutions using dilution buffer.

Reference solutions. Reconstitute the reference preparation as directed. Dilute with dilution buffer to produce a solution containing approximately 1 IU of von Willebrand factor. Prepare 2 series of at least 3 further dilutions using dilution buffer.

Allow the solution of collagen to warm to room temperature. Dilute with collagen diluent to obtain a solution containing 30-75 µg/mL of collagen, mix gently to produce a uniform suspension of collagen fibrils. Pipette 100 µL into each well of the microtitre plate. Cover the plate with plastic film and incubate at 37 °C overnight. Empty the wells of the collagen-coated plate by inverting and draining on a paper towel. Add 250 µL of washing buffer. Empty the wells of the plate by inverting and draining on a paper towel. Repeat this operation 3 times. Add 250 µL of blocking reagent to each well, cover the plate with plastic film and incubate at 37 °C for 1 h. Empty the wells of the plate by inverting and draining on a paper towel. Add 250 µL of washing buffer. Empty the wells of the plate by inverting and draining on a paper towel. Repeat this operation 3 times.

Add 100 µL each of the test solutions or reference solutions to the wells. Add 100 µL of dilution buffer to a series of wells to serve as negative control. Cover the plate with plastic film and incubate at 37 °C for 2 h. Empty the wells of the plate by inverting and draining on a paper towel. Add 250 µL of washing buffer. Empty the wells of the plate by inverting and draining on a paper towel. Repeat this operation 3 times.

Prepare a suitable dilution of the conjugate (for example, a dilution factor of 1 to 4000) with PBS containing 5 g/L of *bovine albumin R* and add 100 µL to each well. Cover the plate with plastic film and incubate at 37 °C for 2 h. Empty the wells of the plate by inverting and draining on a paper towel. Add 250 µL of washing buffer. Empty the wells of the plate by inverting and draining on a paper towel. Repeat this operation 3 times.

Add 100 µL of substrate solution to each of the wells and incubate at room temperature for 20 min in the dark. Add 100 µL of *1 M hydrochloric acid* to each of the wells.

Measure the absorbance at 492 nm. Use the absorbance values to estimate the potency of the preparation to be examined using the usual statistical methods (*5.3*).

The assay is invalid if the absorbances measured for the negative controls are greater than 0.05.

01/2008:20722

2.7.22. ASSAY OF HUMAN COAGULATION FACTOR XI

The principle of the assay is to measure the ability of a factor XI preparation to reduce the prolonged coagulation time of factor XI-deficient plasma. The reaction is accelerated by addition of a reagent containing phospholipid and a contact activator, e.g. kaolin, silica or ellagic acid. The potency is assessed by comparing the dose-response curve of the preparation to be examined to that of a reference preparation consisting of human normal plasma.

1 unit of factor XI is equal to the activity of 1 mL of human normal plasma. Human normal plasma is prepared by pooling plasma units from not fewer than 30 donors and stored at − 30 °C or lower.

Reconstitute separately the preparation to be examined and the reference preparation as stated on the label and use immediately. Where applicable, determine the amount of heparin present (*2.7.12*) and neutralise the heparin, for example by addition of *protamine sulfate R* (10 µg of protamine sulfate neutralises 1 IU of heparin). Predilute the preparation to be examined and the reference preparation in factor XI-deficient plasma (for example *plasma substrate R3*) to produce solutions containing 0.5-2.0 units/mL. Prepare at least 3 appropriate dilutions for each material, preferably in duplicate, using a suitable buffer solution (for example *imidazole buffer solution pH 7.3 R*) containing 10 g/L of bovine or human albumin. Use these dilutions immediately.

Use an apparatus suitable for measurement of coagulation times or perform the assay with incubation tubes maintained in a water bath at 37 °C. Place in each tube 0.1 mL of factor XI-deficient plasma (for example *plasma substrate R3*) and 0.1 mL of one of the dilutions of the reference preparation or of the preparation to be examined. Add to each tube 0.1 mL of a suitable Activated Partial Thromboplastin Time (APTT) reagent containing phospholipid and contact activator and incubate the mixture for a recommended time at 37 °C. To each tube, add 0.1 mL of a 3.7 g/L solution of *calcium chloride R* previously heated to 37 °C. Using a timer, measure the coagulation time, i.e. the interval between the moment of the addition of the calcium chloride and the first indication of the formation of fibrin. The volumes given above may be adapted to the APTT reagent and apparatus used. Calculate the potency using the usual statistical methods (for example, *5.3*).

01/2008:20723

2.7.23. NUMERATION OF CD34/CD45+ CELLS IN HAEMATOPOIETIC PRODUCTS

This chapter describes immunolabelling and analysis by flow cytometry (*2.7.24*) to determine the number of CD34/CD45+ cells contained in haematopoietic products. The determination is carried out by a single platform method using calibrated fluorospheres, after lysis of the sample red blood cells if necessary.

This method applies to all types of preparations and whole blood. However, its level of precision makes it particularly suitable for preparations containing very low percentages of CD34/CD45+ cells.

Graft quality assessment by CD34/CD45+ cell enumeration

A variety of studies have established that the 1-3 per cent of cells in the bone marrow that express the CD34 cell surface antigen are capable of reconstituting long-term, multilineage haematopoiesis after myeloablative therapy. CD34/CD45+ cells are also found in the peripheral circulation of normal individuals but are extremely rare (0.01-0.1 per cent). However, CD34/CD45+ cells may also be mobilised from marrow to the peripheral circulation in greater numbers by haematopoietic cytokines such as granulocyte colony-stimulating factor and/or chemotherapy.

The technique used for enumeration of CD34/CD45+ cells must meet the following requirements:

- high sensitivity, since haematopoietic stem cells are rare events;
- accuracy, to provide clinically relevant results;
- reproducibility, to provide clinically reliable results;
- speed, to provide real-time analysis.

Selection of parameters

The flow cytometry assay uses commercially available, directly conjugated fluorochrome-labelled monoclonal antibodies, routine staining and whole blood lysing procedures, and a gating strategy using light scatter and immunofluorescence analysis using a pan-CD45/CD34 monoclonal antibody combination.

It is possible to determine CD34/CD45+ cell viability by appropriate nucleic acid staining with a stain that does not cross the intact cell membrane (for example, with 7-aminoactinomycin D).

Selection of monoclonal antibodies

CD34 antibodies. Use class III CD34 antibodies that detect all glycosylation variants of the molecule (for example, clone 8G12 or 581). To detect rare events, use an antibody conjugated to the brightest fluorochrome excitable using an argon laser-based flow cytometer, for example phycoerythrin (PE).

CD45 antibodies. Pan-CD45 antibodies that detect all isoforms and all glycoforms of this structure are required. A CD45 antibody conjugated to fluorescein isothiocyanate (FITC) fluorochrome is generally used (for example, J33, HLe1, 2D1).

Isotypic or isoclonic controls. A negative control is analysed to detect any non-specific signal in the PE fluorescence region. If using an isotypic control (a monoclonal antibody to an irrelevant antigen of the same isotype as the CD34 antibody employed), the PE-conjugated isotype is combined with CD45-FITC (or PerCP). If using an isoclonic control, the unconjugated (in excess) and PE-conjugated CD34 identical monoclonal antibody is combined with conjugated CD45. Alternative combinations may be used.

Absolute count of CD34/CD45+

Calibrated fluorospheres. Depending on the technique used, the internal standard either consists of calibrated beads in

suspension or is directly introduced into the associated tubes by the manufacturer.

The absolute count of the CD34/CD45+ cells per microlitre is calculated using the following expression:

$$\frac{A}{B} \times C$$

A = number of CD34/CD45+ cells counted;

B = number of fluorosphere singlets counted;

C = known fluorosphere concentration.

Gating strategies

The purpose of sequential gating is to select the population of interest and simultaneously minimise interference from debris and mature cells to which antibodies can bind non-specifically. If using a commercial kit, apply the gating recommended by the manufacturer. If using an in-house assay, it is preferable to apply a currently recommended strategy. A gating strategy that uses light scattering parameters and CD34/CD45 fluorescence will aid in the accurate identification and enumeration of CD34/CD45+ cells.

Number of events analysed

A sufficient number of events are analysed to maintain acceptable precision, for example not fewer than 100 CD34+ events and not fewer than 60 000 CD45+ events; the total number of cells counted may be greater if the percentage of CD34 is 0.1 per cent or less.

Specimen collection

Acid citrate dextrose (ACD) formula A is the anticoagulant used in apheresis procedures. This anticoagulant allows both an automated leucocyte count and flow cytometry evaluation to be performed on the same specimen. Edetic acid (EDTA) is the anticoagulant of choice for peripheral blood sampling.

Specimen transport

Transport conditions guarantee the physical and thermal safety of samples.

Specimen integrity and storage

Fresh (less than 24 h old) apheresis products, whole blood samples, umbilical cord blood specimens or bone marrow samples can be processed. Old specimens (more than 24 h old) and specimens that have been frozen and thawed are stained with a viability dye. On receipt, the temperature within the package is verified.

TECHNIQUE

Sample preparation

Ensure that the concentration of leucocytes is suitable prior to staining with monoclonal antibodies. If necessary, dilute the sample with medium that is compatible with the product to be tested and the lysing system. Record the dilution factor. It is recommended to perform the test with a negative control.

Flow cytometry analysis

Autostandardisation

For analysis of cells labelled with a commercially available kit, manufacturers have developed some quality tools for setting the flow cytometer. These settings are then automatically transferred on protocol analysis of samples. Specific fluorospheres are used to set the photomultiplier tube (PMT) on target values, compensation is set and the system is checked using a control preparation.

System settings

- *Discriminator/threshold*: the forward angle light scatter threshold is set to exclude debris (low forward scatter) but not small lymphocytes from the light-scatter plot.
- *PMT high voltage settings*: these must be consistent with cell-surface marker analysis and established within each laboratory so that negative and positive cell populations of moderate antigen density can be distinguished; PMT voltages are reviewed and adjusted periodically according to standardised laboratory procedures.
- *Compensation*: this must be acceptable for the colour spectra overlap (for example, FITC/PE) encountered in cell-surface marker analysis; colour compensation is analysed and adjusted according to standardised laboratory procedures.
- *Flow rate*: this must be consistent with routine cell-surface marker analysis.
- *Gating regions*: the gating regions established for the CD34/CD45 samples are maintained unaltered for the analysis of the negative region.

Calculation of absolute number of CD34/CD45+ cells

The absolute number of CD34/CD45+ cells is calculated using the following expression:

$$n \times D \times V$$

n = total number of CD34/CD45+ cells per microlitre;

D = dilution factor;

V = volume of the product to be tested, in microlitres.

Results are reported as both the percentage of CD34/CD45+ cells and the absolute number per microlitre. They may also be reported as the absolute number per kilogram of recipient body mass, where this is possible.

01/2008:20724

2.7.24. FLOW CYTOMETRY

Flow cytometry consists of a multiparametric analysis of optical properties of individual particles in a fluidic system.

Cells or particles in suspension are individually distributed into a linear array (stream), which flows through a detection device. Solid tissues have to be reduced to a single-cell suspension to be analysed.

The spectrum of parameters measurable by flow cytometry includes volume and morphological complexity of cells or cell-like structures, cell pigments, DNA content, RNA content, proteins, cell surface markers, intracellular markers, enzymatic activity, pH, membrane and fluidity.

It is possible to collect 2 morphological parameters plus 1 or more fluorescence signals per single cell. The multiparametric analysis allows the definition of cell populations by their phenotype.

APPARATUS

Focusing, magnifying, and choice of light source are optimised to allow the automatic detection and measurement of morphological differences and staining patterns. Flow cytofluorimetric analysis meets the following criteria:

- choice of light source depending on the parameters to be analysed;
- adjustment of instrument settings depending on the cell type to be analysed (for example, cell cultures, leucocytes, platelets, bacteria, spermatozoa, yeast) and the analysis to be performed (for example, phenotyping, cell cycle, apoptosis, cytokines, membrane fluidity, fluorescent protein).

Flow cytometry is characterised by the automated quantification of set parameters for a high number of single cells during each analysis session. For example, 100 000 particles or more (practically unlimited) are analysed one after the other, typically in about 1 min. The detection limit is as low as 100 fluorescent molecules per cell.

A flow cytometer apparatus has 5 main components:

- a fluidic system and a flow cell;
- a light source;

- a detection and Analogue to Digital Conversion (ADC) system;
- an amplification system;
- a computer provided with software for analysis of the signals.

FLUIDIC SYSTEM AND FLOW CELL

The single cell is exposed to the light source and detected in the flow cell. The fluidic system carries the suspended cells individually from the sample tube to the laser intercept point. To achieve this, the sample stream is drawn out to a very thin fluid thread by a sheath fluid in the flow cell (hydrodynamic focusing). The light beam is focused in an elliptical shape, by 2 confocal lenses, into the flow cell channel through which the cells pass. The flow rate must be constant during routine cell surface marker analysis and must ensure a suitable distance between the cells to allow counting.

LIGHT SOURCES

Commonly used light sources are:

- lamps (mercury, xenon);
- high power water-cooled lasers (argon, krypton, dye laser);
- low power air-cooled lasers (argon (488 nm), red helium-neon (633 nm), green helium-neon, helium-cadmium (UV));
- diode lasers (blue, green, red, violet).

SIGNAL DETECTION

When a particle passes across the light beam, it scatters some of the light in all directions. Fluorescent dyes, when added to the particle, give off their own light (fluorescence), which is also radiated in all directions. 2 types of signals may thereby be generated:

- scatter of light;
- fluorescence emission.

The instrument's light detectors collect some of this scattered and fluorescent light and produce electronic signals proportional to the amount of light collected.

Scatter 2 parameters of light scattering are measured:

- the amount scattered mainly forward (forward scatter (FS))
- the amount scattered at 90° from the direction of the light beam (side scatter (SS)).

Forward scatter correlates with the cell volume while side scatter is influenced by parameters such as the shape of the nucleus, the amount and type of cytoplasmic granules or the membrane roughness, and correlates with the morphological complexity of the cell, so that the higher the SS intensity, the higher the cell complexity. As a function of the morphological characteristics of cells, scatter signals will always be generated during a flow analysis; they are defined as intrinsic parameters.

FluorescenceDepending on the type and number of light sources, when a cell passes through the sensing area, it will emit fluorescent light. Fluorescence signals are generated from fluorescent dyes naturally present in the cells (for example, co-enzymes, chlorophyll, seaweed pigments) and/or from fluorescent probes taken up by the cells when stained for the analysis of specific characteristics (for example, fluorescent antibodies, nucleic acid dyes, pH probes, calcium probes, fluorescent proteins). Nowadays, there is a large number and a wide range of different types of fluorescent probes available. The optical filters must be adapted to the fluorochromes used and changed if necessary. Each fluorescent probe is characterised by its excitation spectrum and its emission spectrum. They are chosen depending on the nature of the excitation source and the detection system, and according to the specific purpose of the analysis.

SIGNAL MANAGEMENT AND ANALOGUE TO DIGITAL CONVERSION

Scatter and fluorescence signals emitted by cells when passing across the laser beam are sorted and addressed to their detectors using optical filters. The detectors are transducers (photomultiplier tubes (PMTs)) that convert light signals radiated from the cells into voltage pulses.

The process of counting each pulse in the appropriate channel is known as Analogue to Digital Conversion (ADC). The process is finally shown as a frequency histogram.

Ampli"cation . Voltage pulses need to be amplified for optimal visualisation. The amplification process accentuates the differences between cell signals, and consequently increases the resolution among cell populations of different characteristics (for example, the differentiation of viable from non-viable cells, or non-specific fluorescence from antigen-specific fluorescence after staining with a fluorescent monoclonal antibody).

There are 2 methods of amplification: linear or logarithmic; the choice between the 2 types is made for every single signal according to the morphological characteristics of the cells and the staining reagents used (for example, fluorescent monoclonal antibodies, nucleic acid dyes).

Linear amplification, which enhances the differences among strong pulses, is used with those parameters that generate high intensity signals, for example:

- cell scatters;
- fluorescence from nucleic acid dyes for cell cycle studies.

Logarithmic amplification, in contrast, is for weak pulses and parameters or analysis conditions that may generate both weak and strong pulses, for example:

- cell antigens;
- scatter from platelets, bacteria, yeast;
- fluorescence from nucleic acid dyes for apoptosis studies.

Compensationof "uorescencesignals Each fluorescent dye has an absorption wavelength spectrum and a higher emission wavelength spectrum. When using 2 or more fluorescent probes simultaneously for staining cells (for example, 4-antigen immunophenotyping), the fluorochromes emission spectra may overlap. As a consequence, each fluorescence detector will sense its own specific fluorescent light and a variable quantity of light emitted by the other fluorescent probes. This results in signal over-evaluation and poor separation of the cell populations.

The solution is in the use of an electronic matrix that allows the selective subtraction of the interfering signals from each fluorescence signal after detector sensing (fluorescence compensation).

Fluorescence compensation requires the use of fluorescence calibrators, preferably positive cell samples stained with the fluorochromes of interest, combined in a manner equivalent to that for the antibody used for the analysis.

SIGNAL PLOTTING AND DISPLAY

After amplification and compensation, the signals are plotted in 2 or 3 dimensions. Histograms show the signal intensities versus the cell counts for a given parameter. Cytograms, in which each dot represents a cell, result from the combination of 2 signal intensities (dual-parameter dot plots). The type and number of plots and signal combinations are chosen on the basis of the specimens and dyes used. When analysing acquired data, the flow cytometry software can also generate other kinds of graphs (such as overlays, surface plots, tomograms, contour plots, density plots, overlay plots). Statistical data such as mean fluorescent intensities (and their shifts in time or their dependence on cell function) can also be used.

DATA ANALYSIS

Different kinds of cell populations may be present inside the cell suspensions to be analysed, some of which are unwanted (such as dead cells, debris or macro-aggregates), or simply not relevant for the analysis (for example, granulocytes when studying lymphocytes). This depends on the cell sample type (whole blood, bone marrow, cell cultures, biological fluids, cell suspensions from solid tissues) and on the handling procedures (for example, staining methods, lysis, fixation, cryopreservation, thawing, paraffin-embedded tissue preparation).

As a consequence, not all the signals generated during a flow cytometry analysis belong to the cells to be studied. 2 strategies are adopted to exclude unwanted and irrelevant cell signals.

The 1st is used during data acquisition. It is a noise threshold, applied to 1 (or more) significant parameter(s), set to acquire only the cells with signal intensities higher than the pre-defined discrimination value for that parameter. Due to its characteristics of a strong signal with a low grade of interference, forward scatter is the parameter most often used as discriminator.

The 2nd, applied during data analysis, consists of the use of gating regions to restrict the analysis only to signals from those populations that satisfy given morphological and expression profile characteristics. 2 types of logical gating are commonly used. The 1st is the morphological gate. The cell populations are identified using their morphological signals (FS and SS). A region gate is drawn around the population of interest (for example, lymphocytes, viable cells) then the fluorescence plots are gated into the selected region. The 2nd is the fluorescence-based gate. The cell population of interest is identified on the basis of the expression intensity of an antigen or a dye, then a gate region is drawn around it. Afterwards the fluorescence plots are gated into the selected region.

The analysis software allows the creation of multiple gate regions, using a sequential logic order. This feature is especially useful when studying rare cell populations or for sorting purposes.

CONTROLS

Internal control. The system's optical alignment must be validated before analysis using adapted fluorospheres and the optimum fluidic stability is checked. The data obtained are reported and allow the periodical review of control values against the mean performance value. A positive control is highly desirable to prove that the test antibody is functional and to allow the proper setting of the flow cytometer. The positive control must include samples known to be positive for the marker of interest.

External control. To ensure reliability in the data obtained or to check inter-laboratory reproducibility, participation in a proficiency testing study is recommended.

07/2009:20725

2.7.25. ASSAY OF HUMAN PLASMIN INHIBITOR

Human plasmin inhibitor, also called human α_2-antiplasmin, is a plasma protein that inhibits the plasmin (a serine protease) pathway of fibrinolysis by rapidly forming a complex with free plasmin. Furthermore, upon blood coagulation, human plasmin inhibitor is cross-linked to fibrin strands by factor XIII, and interferes with binding of the proenzyme plasminogen to fibrin.

The potency of human plasmin inhibitor is estimated by comparing the ability of the preparation to be examined to inhibit the cleavage of a specific chromogenic substrate by plasmin with the same ability of a reference standard of human plasmin inhibitor. Plasmin cleavage of the chromogenic substrate yields a chromophore that can be quantified spectrophotometrically.

The individual reagents for the assay may be obtained separately or in commercial kits. Both end-point and kinetic methods are available. Procedures and reagents may vary between different kits and the manufacturer's instructions are followed. The essential features of the procedure are described in the following example of a microtitre-plate kinetic method.

REAGENTS

Dilution buffer pH 7.5. According to the manufacturer's instructions, a suitable buffer is used. Adjust the pH if necessary.

Plasmin. A preparation of human plasmin that does not contain significant amounts of other proteases is preferably used. Reconstitute and store according to the manufacturer's instructions.

Plasmin chromogenic substrate. A suitable specific chromogenic substrate for plasmin is used: H-D-cyclohexylalanyl-norvalyl-lysyl-*p*-nitroaniline hydrochloride (H-D-CHA-Nva-Lys-*p*NA.HCl) or L-pyroglutamyl-L-phenylalanyl-L-lysyl-*p*-nitroaniline hydrochloride (Glp-Phe-Lys-*p*NA.HCl). Reconstitute in *water R* to give a suitable concentration according to the manufacturer's instructions.

METHOD

Varying quantities of the preparation to be examined are mixed with a given quantity of plasmin and the remaining plasmin activity is determined using a suitable chromogenic substrate.

Reconstitute or thaw the preparation to be examined according to the manufacturer's instructions. Dilute with dilution buffer pH 7.5 and prepare at least 2 independent series of 3 or 4 dilutions for both the preparation to be examined and the reference standard.

Mix 0.020 mL of each dilution with 0.020 mL of dilution buffer pH 7.5 and warm to 37 °C. Add 0.040 mL of a plasmin solution (test concentration in the range of 0.2 nkat/mL to 1.6 nkat/mL) previously heated to 37 °C and leave at 37 °C for 1 min. Add 0.020 mL of the chromogenic substrate solution, previously heated to 37 °C, to each mixture. Immediately start measurement of the change in absorbance at 405 nm (*2.2.25*) using a microtitre plate reader. Calculate the rate of change of absorbance (ΔA/min). Alternatively, an end-point assay might be used by stopping the reaction with acetic acid and measuring the absorbance at 405 nm.

In both cases the duration of the cleavage of the chromogenic substrate should be chosen to produce a linear increase in absorbance at 405 nm, before substrate depletion becomes significant. If the assay is performed in test tubes or cuvettes using a spectrophotometric method, the volumes of reagent solutions are changed proportionally.

Substract the optical density of the blank (prepared with dilution buffer pH 7.5) from the optical density of the preparation to be examined. Check the validity of the assay and calculate the potency of the preparation to be examined by the usual statistical methods (*5.3*).

01/2008:20727

2.7.27. FLOCCULATION VALUE (Lf) OF DIPHTHERIA AND TETANUS TOXINS AND TOXOIDS (RAMON ASSAY)

The content of toxin or toxoid in a sample can be expressed as a flocculation value (Lf) using the Ramon assay. In this assay, antitoxin is added in increasing concentrations to a series of tubes containing a constant amount of toxin or toxoid. At the

equivalence point of toxin/toxoid and antitoxin, flocculation occurs in 1 or more tubes. The first tube in which flocculation occurs is used to determine the Lf value of the sample.

The Lf value of a toxin or toxoid is determined by the number of units of antitoxin that, when mixed with the sample, produces an optimally flocculating mixture (Ramon assay).

Practical experience has shown that the results of the calibration of antitoxins in International Units (IU), for example by comparison to international antitoxin standards, depends on the immunochemical method used. For this reason, antitoxins used for the Ramon assay must be directly calibrated against the *international biological reference reagents for diphtheria or tetanus toxoid for flocculation tests*, using the principles described below. The concentration thus determined may be indicated in Lf-equivalents per millilitre (Lf-eq./mL).

By definition, 1 Lf is the quantity of toxin or toxoid that flocculates in the shortest time with 1 Lf-eq. of specific antitoxin.

A range of volumes of the reference standard of antitoxin adjusted to a concentration of 100 Lf-eq./mL is dispensed into a series of, for example, 7 cm × 1 cm flocculation tubes. A sufficient quantity of a 9 g/L solution of *sodium chloride R* is added to each tube to give a constant total volume of, for example, 1 mL. The test sample is diluted to give an expected concentration of approximately 50 Lf/mL, and, for example, 1 mL aliquots of this dilution are dispensed into each of the tubes containing antitoxin. The tubes are properly mixed by shaking, then placed in a water-bath at a constant temperature between 30 °C and 52 °C, and observed at regular intervals for the first appearance of floccules. This may require the use of a magnifying lens and strong illumination.

The first and the second mixtures to flocculate are recorded as well as the time taken for the first flocculation to appear. 2 tubes may flocculate simultaneously.

The first tube to flocculate is the one that contains the amount of antitoxin closest in equivalence to the amount of antigen in the sample. The antitoxin content of this tube can be used to calculate the Lf value of the sample. If 2 tubes flocculate at the same time, the mean from the tubes are given as the result.

The time taken for the first tube to flocculate (Kf) is a useful indicator of the quality of the antigen. If at a given temperature and concentration of toxoid and antitoxin the Kf value is increased compared with normal, this indicates that the antigen has been damaged. The Kf value may also change with the quality of the antitoxin used.

Example

Tube	A	B	C	D	E	F
Antitoxin added (Lf-eq.)	40	45	50	55	60	65
Antitoxin added (mL)	0.40	0.45	0.50	0.55	0.60	0.65
Saline added (mL)	0.60	0.55	0.50	0.45	0.40	0.35
Diluted sample added	1.0	1.0	1.0	1.0	1.0	1.0

If in this example the first tube to flocculate is tube C then the Lf value of the diluted sample is 50 Lf/mL. However, if the first tube to flocculate is tube A or tube F this does not indicate equivalence at that level. It would be necessary to perform a repeat test using either a different dilution of test sample or selecting a different range of doses of reference antitoxin.

More precision can be obtained by making allowance for the sequence of flocculation after the first tube. Thus, in the example quoted, if the second tube to flocculate had been tube D, the final value for the diluted sample would be 52, whereas if the second tube to flocculate was tube B, the final value would be 48. The test may be performed in duplicate with slightly different dilutions of the test sample.

If there is no indication of the expected Lf value of the sample available, it is advisable to obtain a rough estimate by use of a wider range of antitoxin content in the tubes before proceeding to the final test.

Example

Tube	A	B	C	D	E	F
Antitoxin content (Lf-eq.)	20	30	45	70	100	150

The level of toxin or toxoid and antitoxin concentration in the test may be varied, but this will markedly affect the flocculation time, so that at very low levels the test will take too long, whilst at a high concentration the onset of flocculation may be so rapid as to make it difficult to distinguish the first and second tubes to flocculate.

Assay of low concentrations by blend flocculation

For very low concentrations, it is preferable to measure toxin or toxoid by the method of blend flocculation. This involves comparison of the Lf value of a known toxin or toxoid and that of a mixture of the sample with that toxin or toxoid.

When a toxin or toxoid with a known Lf value and a toxin or toxoid with an unknown Lf value are flocculated together, the mixture will flocculate as the sum of their values if they are homogeneous. If non-homogenous toxins or toxoids are mixed they will produce an aberrant pattern with 2 flocculation maxima.

01/2008:20728

2.7.28. COLONY-FORMING CELL ASSAY FOR HUMAN HAEMATOPOIETIC PROGENITOR CELLS

The haematopoietic system represents a continuum of cells whose phenotype and properties change as they progress from stem cells to differentiated cells.

Haematopoietic progenitor cells (HPCs) are capable of forming colonies or 'cell clusters' in cultures grown in semi-solid media and are said to be 'clonogenic'. The determination of the number of colony-forming cells (CFCs) in a cellular product is an indicator of the functional capacity of the progenitor cells and is a predictor of haematopoietic reconstitution. The measured number of CFCs correlates with the minimum number of progenitors present in the sample.

CELL-SURFACE MARKERS

The capacity of colony-forming cells to give rise to haematopoietic colonies *in vitro* and/or to reconstitute the haematopoietic system has been correlated with the expression of specific cell-surface antigens. The expression of the membrane antigen CD34 is an accepted marker for most of the haematopoietic progenitors and stem cells.

COLONY ASSAY SPECIFICITY

Colony-forming cells are identified with a nomenclature based on the lineages of mature cells present in the colony (for example, CFU-Mix, CFU-GEMM, CFU-GM, CFU-G, CFU-M, BFU-E, CFU-E, CFU-Meg) and are a population of progenitors able to give rise to colonies containing one or more lineages of haematopoietic cells. No or low capacity for self-renewal has been ascribed to this population of human HPCs compared with the most immature stem cells.

The amount and type of growth factors supplied during the culture modulate the type and size of colonies that will be formed.

Greater specificity on the general class of HPCs and on their relative proliferative potential is provided by the time required to differentiate *in vitro* into mature cells. The time required by post-natal colony-forming cells to give rise to a colony formed of mature cells *in vitro* is 10-14 days.

QUALITY ASSURANCE FOR A CFC ASSAY

It is paramount for the overall quality of the colony-forming cell assay to apply a strictly standardised approach. It is therefore recommended to carry out intra- and inter-laboratory validations. The source of the materials, including reagents growth factors and disposables is identified.

The main factors affecting variability in the CFC assay are the number of cells plated and the identification of colonies. Up to 15 per cent intra-laboratory variability may be observed for the same test. If it is necessary to evaluate the number of colony-forming cells in a purified cell population, it is possible to use a limiting dilution approach where the number of wells positive for cell proliferation is measured with an automated system.

The other main source of variability stems from the use of undefined materials (for example foetal bovine serum or bovine serum albumin) in the CFC assay. These products derive from pools of source materials and provide a non-specific stimulation of cellular proliferation. However, it is not uncommon to have batches with particular characteristics that selectively stimulate the proliferation of specific haematopoietic lineages.

Finally, a low level of endotoxins (less than 0.01 IU/mL or less than 0.01 IU/mg) in all the materials used for the clonogenic assay is advisable as higher levels result first in a progressive skewing of the haematopoietic lineages expression in the cultures, and afterwards in a more general inhibition of cell proliferation and clonogenesis.

CFC CLONOGENIC ASSAY

The CFC assay is based on the capacity of progenitor cells to form a colony when plated in a semi-solid medium or in a gel in the presence of specific growth factors. Different types of semi-solid media may be used (for example methylcellulose, collagen, agar and plasma-clot) depending on the desired readout. Commercially available media usually give more reproducible results.

MATERIALS

A validation is performed at least for the following critical materials.

Growth factors. Both multilineage (such as Kit-ligand or stem cell factor (SCF), interleukin-3, granulocyte-macrophage colony-stimulating factor (GM-CSF)) and lineage-specific (erythropoietin, granulocyte colony-stimulating factor (G-CSF)) growth factors are required to obtain the highest number of colonies from a cell suspension containing a mixed population of HPCs.

Other media components. Media may be supplemented by serum (notably by foetal bovine serum) and/or albumin.

CELL CULTURE

Cells. The sample placed in culture must be representative of the cellular product injected. Cell suspensions are required for this assay. In the case of bone marrow aspirates, such suspensions can be obtained by forcing the bone marrow through a sieve or through progressively smaller calibre needles. Repeated passages through a 21-gauge needle are usually sufficient to disperse cell clusters into a cell suspension.

PLATING AND SCORING

The cells diluted in the culture medium are mixed in the semi-solid medium. It is common to plate 1 mL of the mixture in an untreated sterile Petri dish (Ø 35 mm).

Because of the viscosity of the medium, the solution cannot be plated with air displacement pipettes and the use of syringes equipped with large bore (18-gauge) needles is required.

The number of cells to be plated depends on the HPC concentration in the sample to be tested. So that no colony is derived from 2 different HPCs, the number of cells plated must allow between 40 and 80 colonies per plate (Ø 35 mm) to be counted. The •target• number of colonies per plate may be obtained either from the percentage of CD34+ (or concentration of CD34+ cells/mL) determined by flow cytometry (*2.7.24*) or from different dilutions of the cell suspension (usually 2 concentrations are tested).

The plates are incubated in aerobic conditions with a carbon dioxide concentration of 5 per cent, at 37 °C in a humid (saturated) atmosphere for 10-14 days, and the number of colonies is then scored under an inverted microscope. Care must be taken when manipulating the dishes containing the colonies as the methylcellulose-based medium is viscous but not jellified. An inclined plate will result in mixed and •comet•-shaped colonies making the scoring likely to be incorrect.

IDENTIFICATION OF THE COLONIES

The size and structure of the colonies depend on the type of mature cells that are their constituents. 50 cells per colony is usually considered a minimum. The presence of haemoglobinised cells identifies progenitors of the erythroid lineage. As the amount of mature cells for each lineage largely depends on the growth factors added to the cultures, performing differentiated counts is not recommended unless otherwise prescribed.

EXPRESSION OF THE RESULTS

The results of CFC culture are usually expressed as the arithmetic mean of the number of colonies counted in at least 3 plates in the test. The mean number of colonies is then related to 10^4 or 10^5 viable nucleated cells placed in culture.

01/2008:20729

2.7.29. NUCLEATED CELL COUNT AND VIABILITY

The determination of the quality of cell suspensions requires accurate measurements of both cell concentration and percentage of viable cells. These data are essential to the decision-making process for preparing cellular products and for maintaining optimum culture conditions. The cell count may be expressed as the number of cells per volume of cell suspension and the cell viability as the number of viable cells per volume of cell suspension. The cell-count procedure may be performed manually (haemocytometer) or with an automated apparatus (for example particle counter, flow cytometer). Other methods than that described below may be used.

CELL NUMBER

MANUAL COUNTING

Description of the apparatus and test principle. The following materials are required :

… a haemocytometer a specialised microscope counting chamber available in different designs. It consists of a thick slide and a coverslip mounted to delimit a chamber with a specific volume for each design. The thick slide of the various haemocytometers consists of counting chambers separated by deep grooves to avoid cross-filling. The counting chamber is etched in the glass and contains a grid which is specific for each model ;

… a light microscope - low power 10× to 40× magnification ;

… pipettes of a suitable volume range.

The haemocytometer is used to quantify the number of cells in a given solution by calculation of the cell concentration per millilitre (C) using the following expression:

$$a \times 10^n \times d$$

a = number of cells counted;

d = dilution factor (where applicable);

n = factor varying with the volume of the haemocytometer chamber.

It is possible to distinguish between mixed cell populations provided they differ in size or pigmentation (for example, leukocytes and erythrocytes).

Preparation of the counting chamber and analysis. Mount the coverslip (slightly moistened on the edges) on the slide. Move the coverslip back and forth over the slide, pressing slightly on the sides. Prepare a suitable dilution of the cell suspension in isotonic buffer or in haemolysis buffer.

Add an appropriate volume of the dilution to the counting chamber. The liquid is added to the border of the coverslip and is drained inside the chamber by capillarity. Carefully place the haemocytometer under the microscope and focus. Count the cells in a zone of the grid. Calculate the cell concentration in the diluted and original samples.

To increase the accuracy of the measurement, it is important to respect the following basic precautions:

- use only suitably thickened coverslips;
- wherever possible, count more than 100 cells (if necessary, count more areas);
- where cell clustering is detected (i.e. the cell suspension is not monocellular), resuspend the cells before sampling and count again;
- avoid underfilling or overflowing the chamber, otherwise the volume will no longer be accurate.

AUTOMATED COUNTING METHODS

Particle counters based on conductivity variation. Electronic particle counting devices measure the size and number of particles in a solution.

Particle counters are calibrated before use with a solution of particles of known concentration and size. To allow the counting of larger particles, tubes fitted with differently calibrated orifices are available. These apparatuses do not allow the discrimination between dead and live cells. As cell debris may also generate pulses that may cause errors, counters are also fitted with a threshold control allowing only larger particles to be counted.

The apparatus must be qualified for the counting of cellular products (in terms of linearity, accuracy, etc.).

Particle counters based on flow cytometry (*2.7.24*). The flow cytometer is calibrated with reference particles of known concentration and size to give an absolute cell number per volume. However, a calibrating solution is no longer necessary in instruments using 2 electrodes inserted in the sampling chamber where the fixed size of the sampling chamber and distance between the 2 electrodes allow the measurement of the content of a fixed volume. This type of instrument rarely needs to be calibrated after the initial setting.

VIABILITY

This section applies to cell staining by viability dyes and manual or automated analysis, under a light microscope or by flow cytometry, of a cell suspension in order to determine the percentage of viable cells.

Depending on the type of cells and the method used, the results may differ.

MANUAL DYE-EXCLUSION METHOD

Test principle. This test is based on the exclusion of the dye from viable cells whereas dead or damaged cells absorb the dye and are coloured. It provides information on the cytoplasmic membrane integrity but its results do not necessarily reflect cell functionality. Recently trypsinised or thawed viable cells may have leaky membranes, causing them to absorb the dye.

Dye. Trypan blue is the stain most commonly used to distinguish between viable and non-viable cells, but other suitable dyes such as erythrosin B or nigrosin may also be used. It is an acid dye (M_r 961), an anion with 4 sulfonate groups that can easily bind to proteins; therefore the protein concentration of the preparation to be tested must be as low as possible.

Test conditions. Dye fixation is strongly influenced by pH, within a range of 6.6 to 7.6. Fixation is optimal at pH 7.5. The other conditions, such as the dye concentration and the staining time are validated.

Storage conditions of the dye: Generally a 0.4 or 0.5 per cent trypan blue solution in sterile phosphate-buffered saline is used. Store protected from light and air.

Test preparation and analysis. Stain the cell suspension at the required dilution (usually in phosphate-buffered saline) with, for example, a trypan blue solution having a final concentration of 0.1 to 0.2 per cent. Mix gently. Incubate for not more than 2-4 min at room temperature. Mix gently and place a suitable volume in a counting chamber. Count without delay.

Determine the percentage of viable cells from the ratio of the number of unstained cells to the total number of cells under a light microscope, considering all stained cells as dead cells. Viability (V) is calculated as a percentage using the following expression:

$$\frac{n}{N} \times 100$$

n = number of unstained (viable) cells;

N = total number of cells (stained and unstained).

It is essential that the incubation time be not more than 4 min as the number of stained cells may increase significantly afterwards. For a new determination, it may therefore be necessary to prepare a new test.

AUTOMATED METHODS

Flow cytometry

Test principle. The test is based on the ability of certain dyes to cross damaged membranes and bind to DNA by intercalating between bases so that dead cells may fluoresce and be detected by flow cytometry (*2.7.24*). Non-viable cells are evaluated and discriminated by focusing on positive staining whereas viable cells remain unstained. This analysis is generally performed with 7-aminoactinomycin D (7-AAD) or propidium iodide (PI) but other suitable dyes may also be used.

Dye. 7-AAD and PI are given as examples of membrane-impermeants that may be used as viability dyes.

7-AAD is an analogue of actinomycin D that contains a substituted amino group at position 7 of the chromophore. It intercalates between cytosine and guanine DNA bases. The spectral properties of 7-AAD make this molecule particularly suitable for flow-cytometry analysis. The maximum absorption of the 7-AAD/DNA complex is situated in the green spectral region and is thus suitable for an argon laser-equipped cytometer (excitation wavelength of 488 nm). The deep red fluorescence emission of the 7-AAD viability dye (635 nm to 675 nm) eases the use of the probe in combination with fluorescein isothiocyanate (FITC) and phycoerythrin (PE)-conjugated antibodies, because in contrast to PI, the 7-AAD/DNA complex shows minimal overlap with FITC and PE.

PI binds to double-stranded DNA by intercalating between bases with little or no sequence preference and with a stoichiometry of 1 dye molecule per 4-5 DNA base pairs. Once the dye is bound to nucleic acids, its fluorescence is enhanced

20- to 30-fold, the fluorescence excitation maximum is shifted around 30-40 nm towards the red and the fluorescence emission maximum (615 nm) is shifted around 15 nm towards the blue. Although its absorptivity is quite low, PI exhibits a sufficiently large Stokes shift to allow simultaneous detection of nucleic acids and fluorescein-labelled antibodies, provided that the suitable optical filters are used.

Storage conditions of nucleic acid dye solution: 5 ± 3 °C.

Test preparation and analysis. In the case of haematopoietic cells, the dye may be added after CD45 labelling to obtain a better separation of cells from debris and platelets with a side scatter (SS)/CD45+ gating region. The incubation conditions of the cell suspension with the dye are validated previously.

Incubation is performed at room temperature protected from light. Where necessary, lysis of red blood cells is performed using, for example, ammonium chloride. If not, add buffer alone.

Percentages of viable cells are directly given by the flow cytometer and deduced from the analysis of positive cells (dead cells) in the SS/7-AAD or SS/PI cytogram (dot plots).

Positive controls may consist of stabilised cells (dead cells) mixed with fresh viable cells at a target value.

Digital imaging of stained cells. Digital imaging allows the automation of dye-exclusion methods. The cell suspension and viability-dye solution are directly mixed by a machine. The system, which allows sample aspiration, reagent handling, and subsequent instrument cleaning is fully automated. Once the cellular suspension has been aspirated and mixed with the dye solution, it is pumped to the flow cell for imaging. The stained cell suspension is aspirated through a chamber where stroboscopic light allows a camera to photograph the flowing cells. The images are digitalised and the number of dead or live cells counted by the software.

07/2008:20730
corrected 7.0

2.7.30. ASSAY OF HUMAN PROTEIN C

1. CHROMOGENIC ASSAY

Human protein C is a vitamin K-dependent plasma protein that, upon activation to activated protein C (APC), can inhibit blood coagulation through the proteolytic cleavage of factors Va and VIIIa. Human protein C activity is estimated using a two-step method: in the 1st step, human protein C in the preparation is activated by a specific activator from snake venom; in the 2nd step, APC cleaves a specific chromogenic substrate to form a chromophore that can be quantified spectrophotometrically.

Step 1

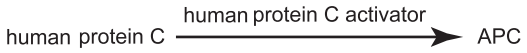

Step 2

The potency of human protein C is estimated by comparing the ability of the preparation to be examined to cleave a chromogenic substrate with the same ability of a reference standard of human protein C calibrated in International Units. The International Unit is the activity of a stated amount of the International Standard for human protein C. The equivalence in International Units of the International Standard is stated by the World Health Organization.

Individual reagents may be obtained separately or in commercial kits. Both end-point and kinetic methods are available. Procedures and reagents may vary between different kits and the manufacturer's instructions are followed. The essential features of the procedure are described in the following example of a microtitre plate end-point method.

REAGENTS

Dilution buffer pH 8.4. Dissolve 6.055 g of *tris(hydroxymethyl)aminomethane R* and 16.84 g of *caesium chloride R* in *water R* and adjust the pH if necessary. Dilute to 1000.0 mL with *water R*.

Human protein C activator. Protein isolated from the venom of the viper *Agkistrodon contortrix contortrix* that specifically activates human protein C. Reconstitute and store according to the manufacturer's instructions. Dilute to 0.25 U/mL with *water R* before use in the assay.

Activated protein C chromogenic substrate. Specific chromogenic substrate for APC, for example L-pyroglutamyl-L-prolyl-L-arginyl-*p*-nitroaniline hydrochloride (pyroGlu-Pro-Arg-pNA.HCl). Reconstitute with *water R* to give a concentration of 4.5 mmol/L. Further dilute to 1.1 mmol/L with dilution buffer pH 8.4 before use in the assay.

METHOD

Reconstitute or thaw the preparation to be examined according to the manufacturer's instructions. Dilute with *water R* to produce at least 3 separate dilutions for each preparation in the range 0.050-0.200 IU/mL, preferably in duplicate.

Step 1. Mix 0.025 mL of each dilution with 0.050 mL of the human protein C activator, both previously heated to 37 °C, and leave at 37 °C for exactly 10 min. For each dilution, prepare a blank in the same manner, using *water R* instead of the human protein C activator.

Step 2. Add 0.150 mL of diluted chromogenic substrate, previously heated to 37 °C, to each mixture and leave at 37 °C for exactly 10 min. The incubation time must be adjusted, if necessary, to ensure a linear development of chromophore with time. Terminate the reaction by adding 0.050 mL of a 50 per cent *V/V* solution of *glacial acetic acid R*.

Cleavage of the chromogenic substrate by APC causes release of the chromophore pNA, in proportion to the concentration of human protein C in the preparation. Measure the optical density at a wavelength of 405 nm. Subtract the optical density of the blank from the optical density of the test sample. Check the validity of the assay and calculate the potency of the preparation to be examined using the usual statistical methods (*5.3*).

2. CLOTTING ASSAY

Human protein C activity is estimated following cleavage to APC by a specific activator extracted from the venom of the viper *Agkistrodon contortrix contortrix*. The resulting APC inactivates factors Va and VIIIa, and thus prolongs the APTT (Activated Partial Thromboplastin Time) of a system in which all the coagulation factors are present, constant and in excess, except for human protein C, which is derived from the preparation being tested. Prolongation of the clotting time is proportional to the concentration of human protein C in the preparation.

The potency of human protein C is estimated by comparing the ability of the preparation to be examined to prolong the clotting time with the same ability of a reference standard of human protein C calibrated in International Units. The International Unit is the activity of a stated amount of the International Standard for human protein C. The equivalence in International Units of the International Standard is stated by the World Health Organization.

Individual reagents may be obtained separately or in commercial kits. Procedures and reagents may vary between different kits and the manufacturer's instructions are followed. The essential features of the procedure are described in the following example.

REAGENTS

Dilution buffer pH 7.4. Isotonic non-chelating buffer.

Human protein C-deficient plasma. Citrated human plasma with no measurable human protein C content. Reconstitute and store according to the manufacturer's instructions.

Human protein C activator. Protein isolated from the venom of the viper *Agkistrodon contortrix contortrix* that specifically activates human protein C. Reconstitute and store according to the manufacturer's instructions.

Coagulation activator. A suitable APTT reagent containing phospholipids and a contact activator may be used. It may be combined with the human protein C activator.

METHOD

Reconstitute or thaw the preparation to be examined according to the manufacturer's instructions. Dilute with dilution buffer pH 7.4 to produce at least 3 separate dilutions for each preparation in the range 0.010-0.150 IU/mL, preferably in duplicate.

Mix 1 volume of each dilution with 1 volume of human protein C-deficient plasma and 1 volume of the human protein C activator (combined with the APTT reagent where appropriate), all previously heated to 37 °C. Add 1 volume of *0.025 M calcium chloride solution R* previously heated to 37 °C, and record the clotting time.

The clotting time is proportional to the concentration of human protein C in each dilution. Check the validity of the assay and calculate the potency of the preparation to be examined using the usual statistical methods (*5.3*).

07/2008:20731

2.7.31. ASSAY OF HUMAN PROTEIN S

Human protein S is a vitamin K-dependent plasma protein that acts as a cofactor for the anticoagulant functions of activated protein C (APC). Human protein S activity may be determined by the clotting assay described below, which is sensitive to the ability of human protein S to accelerate the inactivation of factor Va by APC. In practice, the assay involves the addition of human protein S to a reagent mixture containing APC, factor Va and human protein S-deficient plasma. Prolongation of the clotting time is proportional to the concentration of human protein S in the preparation. Methods in which APC is added directly as a reagent are preferred to those in which APC is generated during the assay by the addition of a specific human protein C activator purified from snake venom. Activation of coagulation is initiated by the addition of an activating reagent such as thromboplastin or activated factor X, together with phospholipids and calcium chloride. During the assay, factor Va is generated from factor V in the human protein S-deficient plasma following the activation of coagulation. The assay procedure must ensure that human protein S is the only limiting factor.

The potency of human protein S is estimated by comparing the ability of the preparation to be examined to prolong the clotting time with the same ability of a reference standard of human protein S calibrated in International Units. The International Unit is the activity of a stated amount of the International Standard for human protein S. The equivalence in International Units of the International Standard is stated by the World Health Organization.

Individual reagents may be obtained separately or in commercial kits. Procedures and reagents may vary between different kits and the manufacturer's instructions are followed. The essential features of the procedure are described in the following example.

REAGENTS

Dilution buffer pH 7.4. Isotonic non-chelating buffer prepared as follows: dissolve 6.08 g of *tris(hydroxymethyl)aminomethane R* and 8.77 g of *sodium chloride R* in *water R* and adjust the pH if necessary; add 10 g of *bovine albumin R* or *human albumin R* and dilute to 1000.0 mL with *water R*.

Human protein S-deficient plasma. Citrated human plasma with no measurable human protein S content and, preferably, also free of C4b-binding protein.

Coagulation activator. This reagent is used to initiate coagulation in the human protein S-deficient plasma, and thereby also provides a source of activated factor V. The activator may consist of tissue factor, activated factor X, or an agent capable of directly activating factor X that may be purified from the venom of Russell's viper (*Vipera russelli*). The reagent also contains APC, phospholipids and *calcium chloride R*, or, alternatively, calcium chloride may be added separately after a timed activation period.

METHOD

Reconstitute or thaw the preparation to be examined according to the manufacturer's instructions. Dilute with dilution buffer pH 7.4 to produce at least 3 separate dilutions for each preparation in the range 0.020-0.100 IU/mL, preferably in duplicate.

Mix 1 volume of each dilution with 1 volume of human protein S-deficient plasma, both previously heated to 37 °C. Add 2 volumes of the coagulation activator, previously heated to 37 °C, and record the clotting time.

Alternative procedures may use a coagulation activator without calcium chloride, and require a precisely timed activation period before the addition of calcium chloride and the measurement of clotting time.

The clotting time is proportional to the concentration of human protein S in each dilution. Check the validity of the assay and calculate the potency of the preparation to be examined using the usual statistical methods (*5.3*).

07/2008:20732

2.7.32. ASSAY OF HUMAN -1-PROTEINASE INHIBITOR

Human α-1-proteinase inhibitor (also known as α-1-antitrypsin or α-1-antiproteinase) content is determined by comparing the ability of the preparation to be examined to inactivate the serine protease elastase (porcine pancreatic elastase or human neutrophil elastase) with the same ability of a reference standard of human α-1-proteinase inhibitor calibrated in milligrams of active (functional) α-1-proteinase inhibitor. Varying quantities of the preparation to be examined are mixed with a given quantity of elastase and the remaining elastase activity is determined using a suitable chromogenic substrate. The method described below is given as an example.

REAGENTS

Tris-albumin buffer solution. Dissolve 24.23 g of *trometamol R* in *water R*, adjust to pH 8.0 ± 0.3 using *hydrochloric acid R1* and dilute to 1000 mL with *water R*. To 100 mL of this solution add 0.5 mL of a 20 per cent solution of *human albumin R* or *bovine albumin R*.

Buffer solution containing human or bovine albumin must be prepared fresh on the day of its use; otherwise, it can be conserved by sterile filtration (0.2 µm) and stored at 2-8 °C for up to 2 weeks.

METHOD

Prepare 2 series of 4 or 5 dilutions in an appropriate human α-1-proteinase inhibitor concentration range, for both the preparation to be examined and the reference standard, using the tris-albumin buffer solution.

Transfer 50 µL of the reference solution dilutions into the wells of a microtitre plate and to each well, add 150 µL of a porcine pancreatic elastase solution diluted to an appropriate

concentration with the tris-albumin buffer solution. Incubate for a defined period of time, 3-10 min, at room temperature. Since the activity of the solutions of the different porcine pancreatic elastases may vary, the concentration of elastase can be adjusted by evaluation of blank values containing elastase but no human α-1-proteinase inhibitor, to exhibit a suitable change of absorbance at 405 nm under the actual assay conditions.

Add to each well 100 µL of a solution of chromogenic substrate *N*-succinyl-tri-L-alanyl 4-p-nitroanilide (Suc-Ala-Ala-Ala-pNA), reconstituted in *dimethyl sulfoxide R* to give a solution containing 4.5 mg/mL, then further diluted with the tris-albumin buffer solution to a concentration of 0.45 mg/mL. Immediately start measurement of the change in absorbance (*2.2.25*) at 405 nm using a microtitre plate reader, continuing the measurement for at least 5 min. Calculate the rate of change of absorbance (ΔA/min). Alternatively, an end-point assay may be used by stopping the reaction with acetic acid and measuring the absorbance at 405 nm. If the assay is performed in test tubes using spectrophotometers for monitoring the change in absorbance at 405 nm, the volumes of reagent solutions are changed proportionally.

The rate of change of absorbance (ΔA/min) is inversely proportional to human α-1-proteinase inhibitor activity.

Check the validity of the assay and calculate the potency of the test preparation by the usual statistical methods (*5.3*).

2.8. METHODS IN PHARMACOGNOSY

01/2008:20801

2.8.1. ASH INSOLUBLE IN HYDROCHLORIC ACID

Ash insoluble in hydrochloric acid is the residue obtained after extracting the sulfated or total ash with hydrochloric acid, calculated with reference to 100 g of drug.

To the crucible containing the residue from the determination of sulfated or total ash, add 15 mL of *water R* and 10 mL of *hydrochloric acid R*, cover with a watch-glass, boil the mixture gently for 10 min and allow to cool. Filter through an ashless filter, wash the residue with hot *water R* until the filtrate is neutral, dry, ignite to dull redness, allow to cool in a desiccator and weigh. Reheat until the difference between 2 consecutive weighings is not more than 1 mg.

01/2008:20802

2.8.2. FOREIGN MATTER

Herbal drugs should be free from moulds, insects and other animal contamination.

Foreign matter is material consisting of any or all of the following:

1) *Foreign organs*: matter coming from the source plant but not defined as the drug,

2) *Foreign elements*: matter not coming from the source plant and either of vegetable or mineral origin.

DETERMINATION OF FOREIGN MATTER

Weigh 100 g to 500 g of the substance to be examined, or the minimum quantity prescribed in the monograph, and spread it out in a thin layer. Examine for foreign matter by inspection with the unaided eye or by use of a lens (6 ×). Separate foreign matter and weigh it and calculate the percentage present.

01/2008:20803

2.8.3. STOMATA AND STOMATAL INDEX

STOMATA

There are several types of stomata (see Figure 2.8.3.-1), distinguished by the form and arrangement of the surrounding cells:

(1) The *anomocytic* (irregular-celled) type: the stoma is surrounded by a varying number of cells in no way differing from those of the epidermis generally,

(2) The *anisocytic* (unequal-celled) type: the stoma is usually surrounded by 3 subsidiary cells, of which one is markedly smaller than the others,

(3) The *diacytic* (cross-celled) type: the stoma is accompanied by 2 subsidiary cells, whose common wall is at right angles to the guard cells,

(4) The *paracytic* (parallel-celled) type: the stoma has on each side one or more subsidiary cells parallel to the long axis of the pore and guard cells.

STOMATAL INDEX

$$\text{Stomatal Index} = \frac{100 \times S}{E + S}$$

S = the number of stomata in a given area of leaf,

E = the number of epidermal cells (including trichomes) in the same area of leaf.

For each sample of leaf, make not fewer than 10 determinations and calculate the mean.

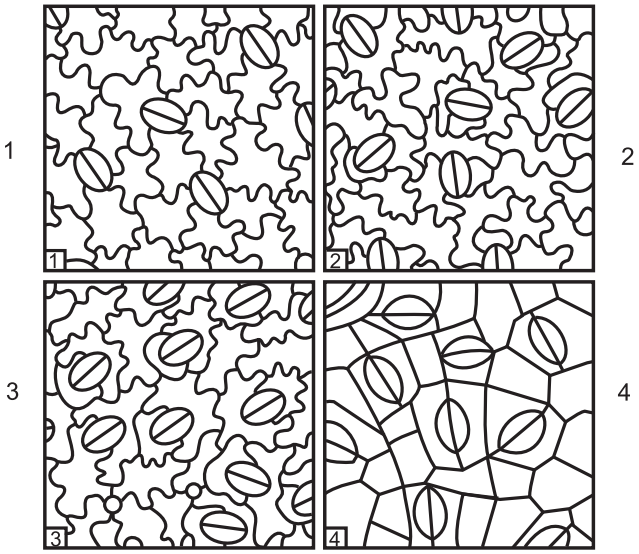

Figure 2.8.3.-1

01/2008:20804

2.8.4. SWELLING INDEX

The swelling index is the volume in millilitres occupied by 1 gram of a drug, including any adhering mucilage, after it has swollen in an aqueous liquid for 4 h.

In a 25 mL ground-glass stoppered cylinder graduated over a height of 125 ± 5 mm in 0.5 mL divisions, place 1.0 g of the drug, whole or of the degree of comminution prescribed in the monograph. Unless otherwise prescribed, moisten the drug with 1.0 mL of *alcohol R*, add 25 mL of *water R* and close the cylinder. Shake vigorously every 10 min for 1 h. Allow to stand for 3 h. At 90 min after the beginning of the test, release any large volumes of liquid retained in the layer of the drug and any particles of the drug floating at the surface of the liquid by rotating the cylinder about a vertical axis. Measure the volume occupied by the drug, including any adhering mucilage. Carry out 3 tests at the same time.

The swelling index is given by the mean of the 3 tests.

01/2008:20805

2.8.5. WATER IN ESSENTIAL OILS

Mix 10 drops of the essential oil with 1 mL of *carbon disulfide R*. The solution remains clear on standing.

01/2008:20806

2.8.6. FOREIGN ESTERS IN ESSENTIAL OILS

Heat 1 mL of the essential oil for 2 min on a water-bath with 3.0 mL of a freshly prepared 100 g/L solution of *potassium hydroxide R* in *alcohol R*. No crystals are formed within 30 min, even after cooling.

01/2008:20807

2.8.7. FATTY OILS AND RESINIFIED ESSENTIAL OILS IN ESSENTIAL OILS

Allow 1 drop of the essential oil to fall onto filter paper. The drop evaporates completely within 24 h without leaving any translucent or greasy spot.

01/2008:20808

2.8.8. ODOUR AND TASTE OF ESSENTIAL OILS

Mix 3 drops of the essential oil with 5 mL of *alcohol (90 per cent V/V) R* and stir in 10 g of powdered *sucrose R*. The odour and taste are similar to that of the plant or parts of the plant from which the essential oil has been obtained.

01/2008:20809

2.8.9. RESIDUE ON EVAPORATION OF ESSENTIAL OILS

The residue on evaporation of an essential oil is the percentage by mass of the oil which remains after evaporation on a water-bath under the conditions specified below.

Apparatus. The apparatus (see Figure 2.8.9.-1) consists of:

- water-bath with a cover having holes of 70 mm diameter;
- evaporating dish of heat-resistant glass which is inert to the contents;
- desiccator.

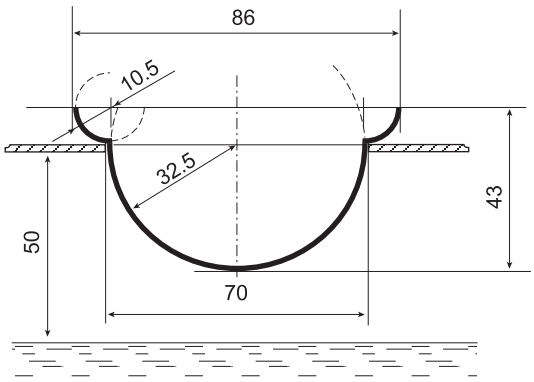

Figure 2.8.9.-1

Dimensions in millimetres

Method. Weigh the evaporating dish after having heated it on the water-bath for 1 h and cooled it in the desiccator. Weigh into the evaporating dish 5.00 g of the essential oil, unless otherwise prescribed. Heat the oil on the vigorously boiling water-bath in a draught-free atmosphere for the prescribed time. Allow to cool in the desiccator and weigh.

During the test, the level of water in the bath is maintained about 50 mm beneath the level of the cover.

01/2008:20810

2.8.10. SOLUBILITY IN ALCOHOL OF ESSENTIAL OILS

Place 1.0 mL of the essential oil in a 25 mL or 30 mL glass-stoppered cylinder. Place in a constant temperature device, maintained at a temperature of 20 ± 0.2 °C. Using a burette of at least 20 mL capacity, add the alcohol of the strength prescribed in the monograph by increments of 0.1 mL until solution is complete and then continue adding by increments of 0.5 mL to a total of 20 mL, shaking frequently and vigorously. Record the volume of alcohol added when a clear solution has been obtained and, if the solution becomes cloudy or opalescent before 20 mL of alcohol has been added, record the volume added when the cloudiness or opalescence appears and, where applicable, the volume added when the cloudiness or opalescence disappears.

If a clear solution has not been obtained when 20 mL of alcohol of the prescribed strength has been added, repeat the test using the next highest concentration of alcohol.

An essential oil is said to be "soluble in *n* volumes and more of alcohol of given strength *t*" when the clear solution in *n* volumes remains clear when compared with the undiluted oil after further addition of alcohol of the same strength up to a total of 20 volumes of alcohol.

An essential oil is said to be "soluble in *n* volumes of alcohol of given strength *t*, becoming cloudy when diluted" when the clear solution in *n* volumes becomes cloudy in n_1 volumes (n_1 less than 20) and stays so after further gradual addition of alcohol of the same strength up to a total of 20 volumes of alcohol.

An essential oil is said to be "soluble in *n* volumes of alcohol of given strength *t* with cloudiness between n_1 and n_2 volumes" when the clear solution in *n* volumes becomes cloudy in n_1 volumes (n_1 less than 20) and stays so after further gradual addition of alcohol of the same strength up to a total of n_2 volumes of alcohol and then becomes clear (n_2 less than 20).

An essential oil is said to be "soluble with opalescence" when the alcoholic solution shows a bluish tinge, similar to that of a standard of opalescence freshly prepared as follows: mix 0.5 mL of *silver nitrate solution R2* and 0.05 mL of *nitric acid R*; add 50 mL of a 12 mg/L solution of *sodium chloride R*; mix and allow to stand protected from light for 5 min.

01/2008:20811

2.8.11. ASSAY OF 1,8-CINEOLE IN ESSENTIAL OILS

Weigh 3.00 g of the oil, recently dried with *anhydrous sodium sulfate R*, into a dry test-tube and add 2.10 g of melted *cresol R*. Place the tube in the apparatus for the determination of freezing point (*2.2.18*) and allow to cool, stirring continuously. When crystallisation takes place there is a small rise in temperature. Note the highest temperature reached (t_1).

Remelt the mixture on a water-bath at a temperature that does not exceed t_1 by more than 5 °C and place the tube in the apparatus, maintained at a temperature 5 °C below t_1. When crystallisation takes place, or when the temperature of the mixture has fallen 3 °C below t_1, stir continuously. Note the highest temperature at which the mixture crystallises (t_2). Repeat the operation until 2 highest values obtained for t_2 do not differ by more than 0.2 °C. If supercooling occurs, induce crystallisation by adding a small crystal of the complex consisting of 3.00 g of *cineole R* and 2.10 g of melted *cresol R*. If t_2 is below 27.4 °C, repeat the determination after the addition of 5.10 g of the complex.

The content of cineole corresponding to the highest temperature observed (t_2) is given in Table 2.8.11.-1. If 5.10 g of the complex has been added, calculate the cineole content per cent *m/m* from the expression:

$$2\,(A - 50)$$

where *A* is the value found in Table 2.8.11.-1.

The content of cineole, corresponding to the highest temperature observed (t_2), is obtained, where necessary, by interpolation.

Table 2.8.11.-1

t_2 °C	cineole per cent *m/m*	t_2 °C	cineole per cent *m/m*	t_2 °C	cineole per cent *m/m*	t_2 °C	cineole per cent *m/m*
24	45.5	32	56.0	40	67.0	48	82.0
25	47.0	33	57.0	41	68.5	49	84.0
26	48.5	34	58.5	42	70.0	50	86.0
27	49.5	35	60.0	43	72.5	51	88.5
28	50.5	36	61.0	44	74.0	52	91.0
29	52.0	37	62.5	45	76.0	53	93.5
30	53.5	38	63.5	46	78.0	54	96.0
31	54.5	39	65.0	47	80.0	55	99.0

01/2008:20812
corrected 6.0

2.8.12. ESSENTIAL OILS IN HERBAL DRUGS

The determination of essential oils in herbal drugs is carried out by steam distillation in a special apparatus in the conditions described below. The distillate is collected in the graduated tube, using xylene to take up the essential oil; the aqueous phase is automatically returned to the distillation flask.

Apparatus. The apparatus comprises the following parts:

(a) a suitable round-bottomed flask with a short, ground-glass neck having an internal diameter of about 29 mm at the wide end;

(b) a condenser assembly (see Figure 2.8.12.-1) that closely fits the flask, the different parts being fused into one piece; the glass used has a low coefficient of expansion:

- the stopper *K′* is vented and the tube *K* has an orifice of diameter about 1 mm that coincides with the vent; the wide end of the tube *K* is of ground-glass and has an internal diameter of 10 mm;
- a pear-shaped swelling, *J*, of 3 mL capacity;
- the tube *JL* is graduated in 0.01 mL;
- the bulb-shaped swelling *L* has a capacity of about 2 mL;
- *M* is a three-way tap;
- the junction *B* is at a level 20 mm higher than the uppermost graduation;

(c) a suitable heating device, allowing a fine control;

(d) a vertical support with a horizontal ring covered with insulating material.

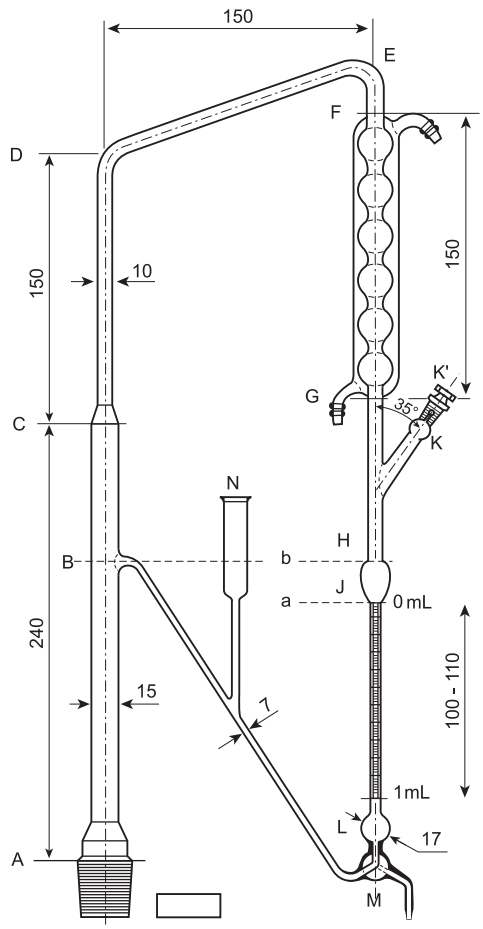

Figure 2.8.12.-1. - *Apparatus for the determination of essential oils in herbal drugs*

Dimensions in millimetres

Method. Use a thoroughly cleaned apparatus. Carry out the assay according to the nature of the drug to be examined. Place the prescribed volume of distillation liquid in the flask, add a few pieces of porous porcelain and attach the condenser assembly. Introduce *water R* through the filling funnel *N* until it is at the level *B*. Remove the stopper *K′* and introduce the prescribed quantity of *xylene R*, using a pipette with its tip at the bottom of the tube *K*. Replace the stopper *K′* and ensure that the orifice coincides with the vent. Heat the liquid in the flask to boiling and adjust the distillation rate to 2-3 mL/min, unless otherwise prescribed.

To determine the rate of distillation, during distillation lower the level of the water by means of the three-way tap until the meniscus is at the level of the lower mark (a) (see Figure 2.8.12.-2). Close the tap and measure the time taken for the liquid to reach the upper mark (b). Open the tap and continue the distillation, modifying the heat to regulate the distillation rate. Distil for 30 min. Stop the heating and after at least 10 min read off the volume of xylene in the graduated tube.

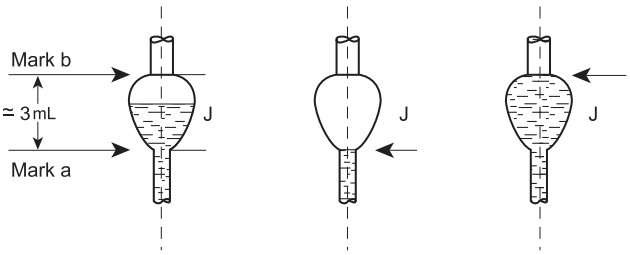

Figure 2.8.12.-2

Introduce into the flask the prescribed quantity of the drug and continue the distillation as described above for the time and at the rate prescribed. Stop the heating and after 10 min

read the volume of liquid collected in the graduated tube and subtract the volume of xylene previously noted. The difference represents the quantity of essential oil in the mass of the drug taken. Calculate the result as millilitres per kilogram of drug.

When the essential oil is to be used for other analytical purposes, the water-free mixture of xylene and essential oil may be recovered as follows: remove the stopper *K′* and introduce 0.1 mL of a 1 g/L solution of *sodium fluoresceinate R* and 0.5 mL of *water R*. Lower the mixture of xylene and essential oil into the bulb-shaped swelling *L* by means of the three-way tap, allow to stand for 5 min and lower the mixture slowly until it just reaches the level of the tap *M*. Open the tap anti-clockwise so that the water flows out of the connecting tube *BM*. Wash the tube with *acetone R* and with a little *toluene R* introduced through the filling funnel *N*. Turn the tap anti-clockwise in order to recover the mixture of xylene and essential oil in an appropriate flask.

07/2008:20813

2.8.13. PESTICIDE RESIDUES

Definition. For the purposes of the Pharmacopoeia, a pesticide is any substance or mixture of substances intended for preventing, destroying or controlling any pest, unwanted species of plants or animals causing harm during or otherwise interfering with the production, processing, storage, transport or marketing of herbal drugs. The item includes substances intended for use as growth-regulators, defoliants or desiccants and any substance applied to crops, either before or after harvest, to protect the commodity from deterioration during storage and transport. Pesticide residues can be present and are controlled in herbal drugs and herbal drug preparations.

Limits. Unless otherwise indicated in the monograph, the herbal drug to be examined at least complies with the limits indicated in Table 2.8.13.-1. The limits applying to pesticides that are not listed in Table 2.8.13.-1 and whose presence is suspected for any reason comply with the limits (levels) cross referred to by Regulation (EC) No. 396/2005, including annexes and successive updates. Limits for pesticides that are not listed in Table 2.8.13.-1 nor in European Union texts are calculated using the following expression:

$$\frac{ADI \times M}{MDD_{HD} \times 100}$$

ADI = acceptable daily intake, as published by FAO-WHO, in milligrams per kilogram of body mass;

M = body mass in kilograms (60 kg);

MDD_{HD} = daily dose of the herbal drug, in kilograms.

The limits for pesticides in herbal drug preparations are calculated using the following expressions:

If DER ≤ 10: $MRL_{HD} \times DER$

If DER > 10: $\frac{ADI \times M}{MDD_{HP} \times 100}$

MRL_{HD} = maximum residue limit of the pesticide in the herbal drug as given in Table 2.8.13.-1 or in EU texts or calculated using the expression mentioned above;

DER = drug/extract ratio, i.e. the ratio between the quantity of herbal drug used in the manufacture of a herbal drug preparation and the quantity of herbal drug preparation obtained;

MDD_{HP} = daily dose of the herbal drug preparation, in kilograms.

The competent authority may grant total or partial exemption from the test when the complete history (nature and quantity of the pesticides used, date of each treatment during cultivation and after the harvest) of the treatment of the batch is known and can be checked precisely according to good agricultural and collection practice (GACP).

Table 2.8.13.-1

Substance	Limit (mg/kg)
Acephate	0.1
Alachlor	0.05
Aldrin and dieldrin (sum of)	0.05
Azinphos-ethyl	0.1
Azinphos-methyl	1
Bromide, inorganic (calculated as bromide ion)	50
Bromophos-ethyl	0.05
Bromophos-methyl	0.05
Brompropylate	3
Chlordane (sum of *cis*-, *trans* - and oxychlordane)	0.05
Chlorfenvinphos	0.5
Chlorpyriphos-ethyl	0.2
Chlorpyriphos-methyl	0.1
Chlorthal-dimethyl	0.01
Cyfluthrin (sum of)	0.1
λ-Cyhalothrin	1
Cypermethrin and isomers (sum of)	1
DDT (sum of *o,p′*-DDE, *p,p′*-DDE, *o,p′*-DDT, *p,p′*-DDT, *o,p′*-TDE and *p,p′*-TDE)	1
Deltamethrin	0.5
Diazinon	0.5
Dichlofluanid	0.1
Dichlorvos	1
Dicofol	0.5
Dimethoate and omethoate (sum of)	0.1
Dithiocarbamates (expressed as CS2)	2
Endosulfan (sum of isomers and endosulfan sulfate)	3
Endrin	0.05
Ethion	2
Etrimphos	0.05
Fenchlorophos (sum of fenchlorophos and fenchlorophos-oxon)	0.1
Fenitrothion	0.5
Fenpropathrin	0.03
Fensulfothion (sum of fensulfothion, fensulfothion-oxon, fensulfothion-oxonsulfon and fensulfothion-sulfon)	0.05

Substance	Limit (mg/kg)
Fenthion (sum of fenthion, fenthion-oxon, fenthion-oxon-sulfon, fenthion-oxon-sulfoxid, fenthion-sulfon and fenthion-sulfoxid)	0.05
Fenvalerate	1.5
Flucytrinate	0.05
τ-Fluvalinate	0.05
Fonophos	0.05
Heptachlor (sum of heptachlor, *cis*-heptachlorepoxide and *trans*-heptachlorepoxide)	0.05
Hexachlorbenzene	0.1
Hexachlorocyclohexane (sum of isomers α-, β-, δ- and ε)	0.3
Lindan (γ-hexachlorocyclohexane)	0.6
Malathion and malaoxon (sum of)	1
Mecarbam	0.05
Methacriphos	0.05
Methamidophos	0.05
Methidathion	0.2
Methoxychlor	0.05
Mirex	0.01
Monocrotophos	0.1
Parathion-ethyl and Paraoxon-ethyl (sum of)	0.5
Parathion-methyl and Paraoxon-methyl (sum of)	0.2
Pendimethalin	0.1
Pentachloranisol	0.01
Permethrin and isomers (sum of)	1
Phosalone	0.1
Phosmet	0.05
Piperonyl butoxide	3
Pirimiphos-ethyl	0.05
Pirimiphos-methyl (sum of pirimiphos-methyl and *N*-desethyl-pirimiphos-methyl)	4
Procymidone	0.1
Profenophos	0.1
Prothiophos	0.05
Pyrethrum (sum of cinerin I, cinerin II, jasmolin I, jasmolin II, pyrethrin I and pyrethrin II)	3
Quinalphos	0.05
Quintozene (sum of quintozene, pentachloraniline and methyl penthachlorphenyl sulfide)	1
S-421	0.02
Tecnazene	0.05
Tetradifon	0.3
Vinclozolin	0.4

Sampling of herbal drugs. Sampling is done according to general chapter *2.8.20. Herbal drugs: sampling and sample preparation*.

Qualitative and quantitative analysis of pesticide residues. The analytical procedures used are validated (e.g. according to Document N° SANCO/10232/2006). In particular, they satisfy the following criteria:

- the chosen method, especially the purification steps, is suitable for the combination pesticide residue/substance to be examined, and not susceptible to interference from co-extractives;
- natural occurrence of some constituents is considered in the interpretation of results (e.g. disulfide from Cruciferaceae);
- the concentration of test and reference solutions and the setting of the apparatus are such that the responses used for quantification of the pesticide residues are within the dynamic range of the detector; test solutions containing pesticide residues at a level outside the dynamic range, may be diluted within the calibration range, provided that the concentration of the matrix in the solution is adjusted in the case where the calibration solutions must be matrix-matched;
- between 70 per cent to 110 per cent of each pesticide is recovered;
- repeatability of the method: RSD is not greater than the values indicated in Table 2.8.13.-2;
- reproducibility of the method: RSD is not greater than the values indicated in Table 2.8.13.-2.

Table 2.8.13.-2

Concentration range of the pesticide (mg/kg)	Repeatability (RSD) (per cent)	Reproducibility (RSD) (per cent)
0.001 - 0.01	30	60
> 0.01 - 0.1	20	40
> 0.1 - 1	15	30
> 1	10	20

01/2008:20814

2.8.14. TANNINS IN HERBAL DRUGS

Carry out all the extraction and dilution operations protected from light.

In the case of a herbal drug or a dry extract, to the stated amount of the powdered drug (180) (*2.9.12*) or the extract in a 250 mL round-bottomed flask add 150 mL of *water R*. Heat on a water-bath for 30 min. Cool under running water and transfer quantitatively to a 250 mL volumetric flask. Rinse the round-bottomed flask and collect the washings in the volumetric flask, then dilute to 250.0 mL with *water R*. Allow the solids to settle and filter the liquid through a filter paper 125 mm in diameter. Discard the first 50 mL of the filtrate.

In the case of a liquid extract or a tincture, dilute the stated amount of the liquid extract or tincture to 250.0 mL with *water R*. Filter the mixture through a filter paper 125 mm in diameter. Discard the first 50 mL of the filtrate.

Total polyphenols. Dilute 5.0 mL of the filtrate to 25.0 mL with *water R*. Mix 2.0 mL of this solution with 1.0 mL of *phosphomolybdotungstic reagent R* and 10.0 mL of *water R* and dilute to 25.0 mL with a 290 g/L solution of *sodium carbonate R*. After 30 min measure the absorbance (*2.2.25*) at 760 nm (A_1), using *water R* as the compensation liquid.

Polyphenols not adsorbed by hide powder. To 10.0 mL of the filtrate, add 0.10 g of *hide powder CRS* and shake vigorously for 60 min. Filter and dilute 5.0 mL of the filtrate to 25.0 mL with *water R*. Mix 2.0 mL of this solution with 1.0 mL of *phosphomolybdotungstic reagent R* and 10.0 mL of *water R* and dilute to 25.0 mL with a 290 g/L solution of *sodium carbonate R*. After 30 min measure the absorbance (*2.2.25*) at 760 nm (A_2), using *water R* as the compensation liquid.

Standard. Dissolve immediately before use 50.0 mg of *pyrogallol R* in *water R* and dilute to 100.0 mL with the same solvent. Dilute 5.0 mL of the solution to 100.0 mL with *water R*. Mix 2.0 mL of this solution with 1.0 mL of *phosphomolybdotungstic reagent R* and 10.0 mL of *water R* and dilute to 25.0 mL with a 290 g/L solution of *sodium carbonate R*. After 30 min measure the absorbance (*2.2.25*) at 760 nm (A_3), using *water R* as the compensation liquid.

Calculate the percentage content of tannins expressed as pyrogallol from the expression:

$$\frac{62.5\,(A_1 - A_2)\,m_2}{A_3 \times m_1}$$

m_1 = mass of the sample to be examined, in grams;

m_2 = mass of pyrogallol, in grams.

01/2008:20815

2.8.15. BITTERNESS VALUE

The bitterness value is the reciprocal of the dilution of a compound, a liquid or an extract that still has a bitter taste. It is determined by comparison with quinine hydrochloride, the bitterness value of which is set at 200 000.

Determination of the correction factor

A taste panel comprising at least 6 persons is recommended. The mouth must be rinsed with *water R* before tasting.

To correct for individual differences in tasting bitterness amongst the panel members it is necessary to determine a correction factor for each panel member.

Stock solution. Dissolve 0.100 g of *quinine hydrochloride R* in *water R* and dilute to 100.0 mL with the same solvent. Dilute 1.0 mL of this solution to 100.0 mL with *water R*.

Reference solutions. Prepare a series of dilutions by placing in a first tube 3.6 mL of the stock solution and increasing the volume by 0.2 mL in each subsequent tube to a total of 5.8 mL; dilute the contents of each tube to 10.0 mL with *water R*.

Determine as follows the dilution with the lowest concentration that still has a bitter taste. Take 10.0 mL of the weakest solution into the mouth and pass it from side to side over the back of the tongue for 30 s. If the solution is not found to be bitter, spit it out and wait for 1 min. Rinse the mouth with *water R*. After 10 min, use the next dilution in order of increasing concentration.

Calculate the correction factor *k* for each panel member from the expression:

$$k = \frac{n}{5.00}$$

n = number of millilitres of the stock solution in the dilution of lowest concentration that is judged to be bitter.

Persons who are unable to taste any bitterness when using the reference solution prepared from 5.8 mL of stock solution have to be excluded from the panel.

Sample preparation

If necessary, reduce the sample to a powder (710) (*2.9.12*). To 1.0 g of sample add 100 mL of boiling *water R*. Heat on a water-bath for 30 min, stirring continuously. Allow to cool and dilute to 100 mL with *water R*. Shake vigorously and filter, discarding the first 2 mL of the filtrate. The filtrate is labelled C-1 and has a dilution factor (DF) of 100.

If liquids have to be examined, 1 mL of the liquid is diluted with a suitable solvent to 100 mL and designated C-1.

Determination of the bitterness value

Test solutions:

10.0 mL of C-1 is diluted with *water R* to 100 mL: C-2 (DF = 1000)

10.0 mL of C-2 is diluted with *water R* to 100 mL: C-3 (DF = 10 000)

20.0 mL of C-3 is diluted with *water R* to 100 mL: C-3A (DF = 50 000)

10.0 mL of C-3 is diluted with *water R* to 100 mL: C-4 (DF = 100 000)

Starting with dilution C-4 each panel member determines the dilution which still has a bitter taste. This solution is designated D. Note the DF of solution D is Y.

Starting with solution D prepare the following sequence of dilutions:

Solution D (mL)	1.2	1.5	2.0	3.0	6.0	8.0
water R (mL)	8.8	8.5	8.0	7.0	4.0	2.0

Determine the number of millilitres of solution D which, when diluted to 10.0 mL with *water R*, still has a bitter taste (X).

Calculate the bitterness value for each panel member from the expression:

$$\left(\frac{\mathrm{Y} \times k}{\mathrm{X} \times 0.1}\right)$$

Calculate the bitterness value of the sample to be examined as the average value for all panel members.

01/2008:20816

2.8.16. DRY RESIDUE OF EXTRACTS

In a flat-bottomed dish about 50 mm in diameter and about 30 mm in height, introduce rapidly 2.00 g or 2.0 mL of the extract to be examined. Evaporate to dryness on a water-bath and dry in an oven at 100-105 °C for 3 h. Allow to cool in a desiccator over *diphosphorus pentoxide R* or *anhydrous silica gel R* and weigh. Calculate the result as a mass percentage or in grams per litre.

01/2008:20817

2.8.17. LOSS ON DRYING OF EXTRACTS

In a flat-bottomed dish about 50 mm in diameter and about 30 mm in height, weigh rapidly 0.50 g of the extract to be examined, finely powdered. Dry in an oven at 100-105 °C for 3 h. Allow to cool in a desiccator over *diphosphorus pentoxide R* or *anhydrous silica gel R* and weigh. Calculate the result as a mass percentage.

01/2008:20818

2.8.18. DETERMINATION OF AFLATOXIN B_1 IN HERBAL DRUGS

CAUTION: aflatoxins are very toxic and carcinogenic. Perform manipulations in a fume cupboard whenever possible. Take particular precautions, such as use of a glove box, when toxins are in dry form because of their electrostatic properties and the tendency to disperse through the working areas. Decontamination procedures for laboratory wastes of aflatoxins were developed by the International Agency for Research on Cancer (IARC).

Aflatoxins are naturally occurring mycotoxins produced mainly by *Aspergillus flavus* and *Aspergillus parasiticus*. These fungi are common and widespread in nature and are most often found when certain grains are grown under conditions of stress such as drought. The mould occurs in soil, decaying vegetation, hay, and grains undergoing microbial spoilage, and invades all types of organic substrates whenever and wherever the conditions are favourable for its growth. Favourable conditions include high moisture content and high temperature. At least 13 different types of aflatoxin are produced in nature and most of these are known to be highly toxic and carcinogenic. Aflatoxin B_1 is considered the most toxic. Herbal drugs that are subject to contamination by aflatoxins are tested by a validated method.

Unless otherwise indicated in the monograph, herbal drugs contain not more than 2 µg/kg of aflatoxin B_1. The competent authority may also require compliance with a limit of 4 µg/kg for the sum of aflatoxins B_1, B_2, G_1 and G_2.

The method described below is cited as an example of a method that has been shown to be suitable for devil's claw root, ginger and senna pods. Its suitability for other herbal drugs must be demonstrated or another validated method used.

METHOD

Liquid chromatography (*2.2.29*).

Aflatoxins are subject to light degradation. Carry out the determination protected from daylight by using UV-absorbing foil on windows in combination with subdued light, or curtains or blinds in combination with artificial light (fluorescent tubes are acceptable). Protect aflatoxin-containing solutions from daylight.

Rinse glassware before use with a 10 per cent *V/V* solution of *sulfuric acid R* and then rinse carefully with *distilled water R* until no more acid is present.

Test solution. Use an immunoaffinity column containing antibodies against aflatoxin B_1 with a capacity of not less than 100 ng of aflatoxin B_1 and which gives a recovery of not less than 80 per cent when a solution of 5 ng of aflatoxin B_1 in a mixture of 12.5 mL of *methanol R* and 87.5 mL of *water R* is passed through. Allow the immunoaffinity column to reach room temperature. To 5.00 g of the powdered drug (500) (*2.9.12*) add 100 mL of a mixture of 30 volumes of *water R* and 70 volumes of *methanol R* and extract by sonication for 30 min. Filter through folded filter paper. Pipette 10.0 mL of the clear filtrate into a 150 mL conical flask. Add 70 mL of *water R*. Pass 40 mL through the immunoaffinity column at a flow rate of 3 mL/min (not exceeding 5 mL/min). Wash the column with 2 volumes, each of 10 mL, of *water R* at a flow rate not exceeding 5 mL/min and dry by applying a slight vacuum for 5-10 s or by passing air through the immunoaffinity column by means of a syringe for 10 s. Apply 0.5 mL of *methanol R* to the column and allow to pass through by gravity. Collect the eluate in a 5 mL volumetric flask. After 1 min, apply a 2nd portion of 0.5 mL of *methanol R*. After a further 1 min, apply a 3rd portion of 0.5 mL of *methanol R*. Collect most of the applied elution solvent by pressing air through or applying vacuum to the column. Dilute to 5 mL with *water R* and shake well. If the solution is clear it can be used directly for analysis. Otherwise, pass it through a disposable filter unit prior to injection. Use a disposable filter unit (e.g. 0.45 µm pore size polytetrafluoroethylene filter) that has been shown not to cause loss of aflatoxin by retention.

Aflatoxin B_1 primary stock solution. Dissolve *aflatoxin B_1 R* in a mixture of 2 volumes of *acetonitrile R* and 98 volumes of *toluene R* to give a 10 µg/mL solution. To determine the exact concentration of aflatoxin B_1 in the stock solution, record the absorption curve (*2.2.25*) between 330 nm and 370 nm in quartz cells.

Calculate the aflatoxin B_1 mass concentration, in micrograms per millilitre, using the following expression:

$$\frac{A \times M \times 100}{\varepsilon \times l}$$

A = absorbance determined at the maximum of the absorption curve;

M = molar mass of aflatoxin B_1 (312 g/mol);

ε = molar absorptivity of aflatoxin B_1 in the toluene-acetonitrile mixture (1930 m^2/mol);

l = optical path length of the cell (1 cm).

Aflatoxin B_1 secondary stock solution. Prepare a secondary stock solution containing 100 ng/mL aflatoxin B_1 by diluting aflatoxin B_1 primary stock solution with a mixture of 2 volumes of *acetonitrile R* and 98 volumes of *toluene R*. Wrap the flask tightly in aluminium foil and store it below 4 °C. Before use, do not remove the aluminium foil until the contents have reached room temperature. If the solution has to be stored for a long period (for example, 1 month), weigh the flask and record the mass before and after each use of the solution.

Aflatoxin B_1 standard solutions. Place the volumes of aflatoxin secondary stock solution indicated in Table 2.8.18.-1 in separate 250 mL volumetric flasks. Pass a stream of nitrogen through at room temperature until the solvent has just evaporated. To each flask, add 75 mL of *methanol R*, allow the aflatoxin B_1 to dissolve and dilute to 250 mL with *water R*.

Table 2.8.18.-1. – *Aflatoxin B_1 standard solutions*

Standard solution	Volume of secondary stock solution (µL)	Final concentration of standard solution (ng/mL)
1	125	0.05
2	250	0.1
3	500	0.2
4	750	0.3
5	1000	0.4

Calibration curve. Prepare the calibration curve using aflatoxin B_1 standard solutions 1 to 5, which cover a range equivalent to 1-8 µg/kg of aflatoxin B_1 in the herbal drug. Check the plot for linearity. If the content of aflatoxin B_1 in the sample to be examined is outside of the calibration range, the test solution must be diluted to an aflatoxin content that is appropriate for the established calibration curve.

Column:

- *size*: l = 0.25 m, Ø = 4.6 mm;
- *stationary phase*: *octadecylsilyl silica gel for chromatography R* (5 µm).

Mobile phase:

- *mobile phase A* (for post-column derivatisation with photochemical reactor or pyridinium bromide): *acetonitrile R*, *methanol R*, *water R* (2:3:6 *V/V/V*);
- *mobile phase B* (for post-column derivatisation with electrochemically derived bromine): add 0.12 g of *potassium bromide R* and 350 µL of *dilute nitric acid R1* per litre of mobile phase A.

Flow rate: 1 mL/min.

Detection: fluorescence detector with a 360 nm excitation filter and a 420 nm cut-off emission filter, or equivalent. Recommended settings for adjustable detectors are 365 nm (excitation wavelength) and 435 nm (emission wavelength).

Injection: 500 µL.

Post-column derivatisation with pyridinium hydrobromide perbromide (PBPB):

- pulseless pump;
- T-piece with zero dead volume;
- polytetrafluoroethylene reaction tube, l = 0.45 m, Ø = 0.5 mm;
- mobile phase A;
- post-column derivatisation reagent: dissolve 50 mg of *pyridinium hydrobromide perbromide R* in 1000 mL of *water R* (store protected from light and use within 4 days);
- flow rate of the derivatisation reagent: 0.4 mL/min.

Post-column derivatisation with photochemical reactor (PHRED)

- reactor unit with one 254 nm low pressure mercury UV bulb (minimum 8 W);
- polished support plate;
- knitted reactor coil: polytetrafluoroethylene tubing knitted tightly around the UV bulb, l = 25 m, Ø = 0.25 mm, nominal void volume 1.25 mL;

- exposure time: 2 min;
- mobile phase A.

Post-column derivatisation with electrochemically generated bromine (KOBRA):

- KOBRA-cell: electrochemical cell that generates a reactive form of bromine for derivatisation of aflatoxins, resulting in enhanced fluorescence; available from various commercial suppliers;
- Derivation direct-current supply in series with the KOBRA-cell, providing a constant current of about 100 µA;
- polytetrafluoroethylene reaction tube, l = 0.12 m, Ø = 0.25 mm;
- mobile phase B.

Elution order: aflatoxin G_2, aflatoxin G_1, aflatoxin B_2, aflatoxin B_1.

Calculation: calculate the calibration curve $y = ax + b$, with aflatoxin B_1 concentration (ng/mL) on the x-axis and the signal (S) on the y-axis. The aflatoxin B concentration (C) in a measured solution is equal to $\frac{S-b}{a}$.

Calculate the aflatoxin B_1 content of the herbal drug, in nanograms per gram, using the following expression:

$$\frac{V_1 \times V_2 \times C}{m \times V_i}$$

m = mass of the herbal drug taken for analysis, in grams;

V_1 = volume of the solvent used for extraction, in millilitres;

V_i = aliquot taken for immunoaffinity clean-up, in millilitres;

V_2 = final volume of solution after elution from the immunoaffinity column and dilution, in millilitres;

C = measured aflatoxin B_1 concentration of the test solution, in nanograms per millilitre.

The presence of aflatoxin B_1 may be confirmed by recording the chromatogram without post-column derivatisation, which leads to a large decrease (greater than 10-fold) in the response due to aflatoxin B_1.

01/2008:20820

2.8.20. HERBAL DRUGS: SAMPLING AND SAMPLE PREPARATION

In order to reduce the effect of sampling in qualitative and quantitative analysis, it is necessary to ensure that the composition of the sample used is representative of the batch of material being examined. The following procedures are the minimum considered applicable for herbal drugs. *NOTE: other procedures may be used if they can be demonstrated to produce representative batch samples.*

BULK SAMPLE

Where external examination of containers, markings and labels of a batch indicate that it can be considered to be homogeneous, sample the number of randomly selected containers indicated below. Where a batch cannot be considered to be homogeneous, divide it into sub-batches that are as homogeneous as possible, then sample each sub-batch as a homogeneous batch using, as a minimum, the number of randomly selected containers indicated below.

Number of containers in batch (N)	Number of containers to be sampled (n)
1 - 3	all
> 3	$n^* = \sqrt{N} + 1$

* round n up to the next integer

Take one sample from each container to be sampled. The sample is taken from the upper, middle or lower section of the container, such that the samples taken are representative of different parts of the containers. In the case of large bales or bags, samples must be taken from a depth of at least 10 cm. The mass of the material taken from each container is such that the total mass of the bulk sample complies with the following values.

Mass of herbal drug in the batch (kg)	Minimum mass of samples as a percentage of the mass of the batch of herbal drug
< 50	1.00*
50 - 100	0.50
> 100 - 250	0.25
> 250 - 500	0.20
> 500 - 1000	0.18
> 1000 - 2500	0.15
> 2500 - 5000	0.10
> 5000 - 10 000	0.08
> 10 000 - 25 000	0.05

NOTE: if the mass of the batch is greater than 25 000 kg, it is divided into sub-batches, and the procedure is applied to each sub-batch as though it were a homogeneous batch.

* subject to a minimum total mass of 125 g for the bulk sample; if this minimum requirement represents more than 10.0 per cent of the mass of herbal drug in the batch, the whole batch may be used as the sample.

Prepare the bulk sample by combining and thoroughly mixing the samples taken from each of the randomly selected containers (see Table 2.8.20.-1).

TEST SAMPLE

Unless otherwise prescribed in the monograph, prepare the test sample as follows.

Reduce the size of the bulk sample by quartering (see Note below) or by any other method that produces a homogeneous sample, making sure that each retained portion remains representative of the whole, until the minimum retained quantity complies with the following conditions.

Type of herbal drug	Minimum weight of test sample
Roots, rhizomes, bark, herbs	500 g or mass of whole sample if bulk sample is less than 500 g
Leaves, flowers, seeds, fruits	250 g or mass of whole sample if bulk sample is less than 250 g
Broken or fragmented drugs (where average mass of the pieces is less than 0.5 g)	125 g

NOTE: quartering consists of placing the bulk sample, thoroughly mixed, as a level and square-shaped heap and dividing it diagonally into 4 equal parts. 2 opposite quarters are retained and carefully remixed. The process is repeated as necessary until the required minimum mass is obtained for the test sample.

Mill the test sample in a single pass through a 1 mm screen or the screen size specified in the monograph. The use of a milling machine is recommended.

Pass the milled sample through a 1 mm standard sieve or the sieve specified in the monograph. The residue retained on the sieve must not be more than 10 per cent of the total mass of the milled sample, of which not more than 2 per cent of the total mass of the milled sample may be of a particle size greater than 1.5 mm or 1.5 times the specified particle size in the monograph. If these conditions are met, the sample and residue are to be well mixed to form the test sample for analysis.

Table 2.8.20.-1. – *Operation of the sampling procedure in order to obtain the prescribed bulk sample*

Mass of herbal drug in container (kg)	**0.5**			**1**			**5**		
Total mass of herbal drug in the batch (kg)	**No. of containers in batch**	**No. of containers to be sampled**	**Total mass of samples (g)**	**No. of containers in batch**	**No. of containers to be sampled**	**Total mass of samples (g)**	**No. of containers in batch**	**No. of containers to be sampled**	**Total mass of samples (g)**
0.5	1	1	125	–	–	–	–	–	–
1	2	2	125	1	1	125	–	–	–
5	10	5	125	5	4	125	1	1	125
10	20	6	125	10	5	125	2	2	125
25	–	–	–	25	6	250	5	4	250
100	–	–	–	100	11	500	20	6	500
250	–	–	–	–	–	–	50	9	625
500	–	–	–	–	–	–	100	11	1000
Mass of herbal drug in container (kg)	**25**			**125**			**500**		
Total mass of herbal drug in the batch (kg)	**No. of containers in batch**	**No. of containers to be sampled**	**Total mass of samples (g)**	**No. of containers in batch**	**No. of containers to be sampled**	**Total mass of samples (g)**	**No. of containers in batch**	**No. of containers to be sampled**	**Total mass of samples (g)**
25	1	1	250	–	–	–	–	–	–
100	4	3	500	–	–	–	–	–	–
250	10	5	625	2	2	625	–	–	–
500	20	6	1000	4	3	1000	1	1	1000
1000	40	8	1800	8	4	1800	2	2	1800
2000	80	10	3000	16	5	3000	4	3	3000
3000	120	12	3000	24	6	3000	6	4	3000
5000	200	16	5000	40	8	5000	10	5	5000
10 000	400	21	8000	80	10	8000	20	6	8000
25 000	800	30	12 500	160	14	12 500	40	8	12 500

In those cases where these requirements are not met, the test sample for analysis is composed of the 2 parts measured separately. Therefore, the quantity required for each analysis is derived by weighing proportional quantities of the powder and the residue.

NOTE: for determination of microscopic characters, a portion of the milled test sample is re-milled through a 0.355 mm screen.

01/2011:20821

2.8.21. TEST FOR ARISTOLOCHIC ACIDS IN HERBAL DRUGS

CAUTION: aristolochic acids are very toxic and carcinogenic. Perform manipulations in a fume cupboard whenever possible. Take particular precautions, such as use of a glove box, when the substance is in dry form because of its electrostatic properties and the tendency to disperse through the working areas.

Methods A and B are intended to be cross-referenced in monographs on herbal drugs that, according to chemotaxonomic knowledge, are expected to be free from aristolochic acids, but that may be subject to adulteration or substitution with plant material containing aristolochic acids. Methods A and B are intended to be used in the screening of herbal drugs for aristolochic acids at the stated limits and will usually be complemented by macroscopic and/or microscopic tests to exclude plant material containing aristolochic acids.

Method C will not be used in specific monographs but is provided as a method to confirm the presence of aristolochic acid I at levels equal to or greater than 2 ppm. It may be applied if chromatographic data suggests the presence of aristolochic acid I.

These methods are not designed for inclusion as assay methods in monographs on those drugs that produce aristolochic acids as secondary metabolites; for these, a more sensitive, validated method is required.

METHOD A: SCREENING TEST FOR ARISTOLOCHIC ACIDS

Thin-layer chromatography (*2.2.27*).

Solvent mixture: *anhydrous formic acid R*, *water R*, *methanol R* (1:9:40 *V/V/V*).

Test solution. To 1.0 g of the powdered herbal drug (710) (*2.9.12*) add 10.0 mL of the solvent mixture, sonicate for 10 min and centrifuge.

Reference solution (a). Disperse an amount of *aristolochia HRS* corresponding to 0.10 mg of aristolochic acid I in 20.0 mL of the solvent mixture, sonicate for 10 min and centrifuge.

Reference solution (b). Dilute 1.0 mL of reference solution (a) to 25.0 mL with *methanol R*.

Plate: *TLC silica gel F_{254} plate R* (2-10 µm).

Mobile phase: *anhydrous formic acid R*, *water R*, *ethyl acetate R*, *toluene R* (3:3:30:60 *V/V/V/V*); use the upper layer.

Application: 20 µL as bands of 8 mm.

Development: over a path of 6 cm.

Drying: in a current of cold air for 5 min.

Detection: spray with a 100 g/L solution of *stannous chloride R* in *dilute hydrochloric acid R* until the plate is slightly wet, heat at 100 °C for 1 min and examine in ultraviolet light at 365 nm.

System suitability:

- the chromatogram obtained with reference solution (a) shows 2 greenish-blue zones due to aristolochic acids I and II between R_F = 0.35 and R_F = 0.55, which may not be completely separated;
- the chromatogram obtained with reference solution (b) shows at least 1 of these zones (corresponding to 2 ppm of aristolochic acid I).

Results: in the chromatogram obtained with the test solution no zone is similar in position and fluorescence to any of the zones due to aristolochic acids in the chromatogram obtained with reference solution (a).

If the chromatogram obtained with the test solution shows any zones similar in position and fluorescence to any of the zones due to aristolochic acids I and II in the chromatogram obtained with reference solution (a), apply method B.

METHOD B: LIMIT TEST FOR ARISTOLOCHIC ACID I

Liquid chromatography (*2.2.29*).

Solvent mixture: *acetonitrile R*, *water R* (50:50 *V/V*).

Test solution. Weigh 2.0 g of the powdered herbal drug (710) (*2.9.12*) into a 250 mL, brown, screw-cap bottle and add 100.0 mL of the solvent mixture. Stir for 30 min at about 300 r/min and filter through a membrane filter (nominal pore size 0.45 µm).

Reference solution (a). Dissolve the contents of a vial of *aristolochic acid I CRS* in the solvent mixture to obtain a concentration of 0.04 µg/mL of aristolochic acid I.

Reference solution (b). Dissolve the contents of a vial of *aristolochic acid for system suitability CRS* (containing aristolochic acids I and II) in the solvent mixture and dilute to 20.0 mL with the solvent mixture.

Column:

- *size*: *l* = 0.15 m, Ø = 2.1 mm;
- *stationary phase*: *octadecylsilyl silica gel for chromatography R* (3.5 µm);
- *temperature*: 40 °C.

Mobile phase:

- *mobile phase A*: *trifluoroacetic acid R*, *water R* (0.1:99.9 *V/V*);
- *mobile phase B*: *trifluoroacetic acid R*, *acetonitrile R* (0.1:99.9 *V/V*);

Time (min)	Mobile phase A (per cent *V/V*)	Mobile phase B (per cent *V/V*)
0 - 25	85 → 35	15 → 65
25 - 30	35 → 0	65 → 100
30 - 31	0 → 85	100 → 15

Flow rate: 0.3 mL/min.

Detection: spectrophotometer at 390 nm.

Injection: 25 µL.

System suitability:

- *resolution*: minimum 3.0 between the peaks due to aristolochic acids I and II in the chromatogram obtained with reference solution (b);
- *signal-to-noise ratio*: minimum 10 for the peak due to aristolochic acid I in the chromatogram obtained with reference solution (a).

Limit:

- the sample complies with the test if the chromatogram obtained with the test solution shows no peak with the same retention time as the peak due to aristolochic acid I in the chromatogram obtained with reference solution (a) (2 ppm).

METHOD C: CONFIRMATORY TEST FOR ARISTOLOCHIC ACID I

Liquid chromatography (*2.2.29*) coupled with mass spectrometry (*2.2.43*).

Solvent mixture: *acetonitrile R*, *water R* (50:50 *V/V*).

Test solution. Weigh 2.0 g of the powdered herbal drug (710) (*2.9.12*) into a 250 mL, brown, screw-cap bottle and add 100.0 mL of the solvent mixture. Sonicate for 30 min and filter through a membrane filter (nominal pore size 0.45 µm).

Reference solution (a). Dissolve the contents of a vial of *aristolochic acid I CRS* in the solvent mixture to obtain a concentration of 0.04 µg/mL of aristolochic acid I.

Reference solution (b). Prepare a solution according to the instructions supplied with *aristolochic acid I CRS* to obtain a concentration of 0.45 µg of aristolochic acid I in 10.0 mL of the test solution.

Column:

- *size*: *l* = 0.15 m, Ø = 2.1 mm;
- *stationary phase*: *octadecylsilyl silica gel for chromatography R* (3.5 µm);
- *temperature*: 40 °C.

Mobile phase:

- *mobile phase A*: *anhydrous formic acid R*, 1 g/L solution of *ammonium acetate R* in *water R* (0.1:99.9 *V/V*);
- *mobile phase B*: *anhydrous formic acid R*, 1 g/L solution of *ammonium acetate R* in *methanol R* (0.1:99.9 *V/V*);

Time (min)	Mobile phase A (per cent *V/V*)	Mobile phase B (per cent *V/V*)
0 - 15	70 → 0	30 → 100
15 - 16	0	100
16 - 17	0 → 70	100 → 30

Flow rate: 0.4 mL/min.

Injection: 20 µL; inject reference solution (a) twice, the test solution twice, reference solution (a) twice, then reference solution (b) twice.

Detection: mass detector as described below under A or B. Adjust the flow rate, the temperature and the detector settings so as to comply with the system suitability criterion.

A. Ion-trap mass spectrometer equipped with an electrospray ionisation (ESI) interface and MS^n analyser.

Set the mass spectrometer parameters for the MS^3 mode as follows:

Mode	Parent (*m/z*)	Isolation width (*m/z*)	Relative collision energy (per cent)
MS^2	359 $[M + NH_4]^+$	2.0	30
MS^3	298	2.0	35

- full scan of product ions: from *m/z* 80 to *m/z* 370;
- product ions to be monitored: *m/z* 252, *m/z* 268 and *m/z* 281.

System suitability:

- *signal-to-noise ratio*: minimum 100 for the monitored product ions in the chromatogram obtained with reference solution (a);
- *matrix interference test*: the average of the 2 ratios of reference solution (b) is inside the ± 40 per cent interval of the average of the 2 ratios of reference solution (a); otherwise it is necessary to adjust the detector settings.

Results: evaluate the average ratios (252/268 and 281/268) of the relative intensity of the 3 product ions of aristolochic acid I in the test solution; evaluate the average of the 2 ratios of the signals at the retention time of aristolochic acid I in reference solution (a); if the average of the 2 ratios

of the test solution is within the ± 40 per cent interval of the average of the 2 ratios of reference solution (a), aristolochic acid I is present in the test solution.

B. Triple-quadrupole mass spectrometer equipped with an ESI interface and MS^n analyser.

Set the mass spectrometer parameters for the MS^2 mode as follows:

- precursor ion: *m/z* 359 $[M + NH_4]^+$;
- product ions to be monitored: *m/z* 265, *m/z* 281 and *m/z* 296.

System suitability:

- *signal-to-noise ratio*: minimum 100 for the monitored product ions in the chromatogram obtained with reference solution (a);
- *matrix interference test*: the average of the 2 ratios of reference solution (b) is inside the ± 40 per cent interval of the average of the 2 ratios of reference solution (a); otherwise it is necessary to adjust the detector settings.

Results: evaluate the average ratios (265/281 and 296/281) of the relative intensity of the 3 product ions of aristolochic acid I in the test solution; evaluate the average of the 2 ratios of the signals at the retention time of aristolochic acid I in reference solution (a); if the average of the 2 ratios of the test solution is within the ± 40 per cent interval of the average of the 2 ratios of reference solution (a), aristolochic acid I is present in the test solution.

01/2010:20822

2.8.22. DETERMINATION OF OCHRATOXIN A IN HERBAL DRUGS

CAUTION: ochratoxin A is nephrotoxic and nephrocarcinogenic. Perform manipulations in a fume cupboard. Take particular precautions, such as use of a glove box, when toxins are in dry form because of their electrostatic properties and the tendency to disperse through the working areas. Decontamination procedures for laboratory glassware containing ochratoxin A are necessary (see appendix).

Herbal drugs that are subject to contamination by ochratoxin A are tested by a validated method.

The method described below is cited as an example of a method that has been shown to be suitable for liquorice extract and liquorice root. Its suitability for other herbal drugs must be demonstrated or another validated method used.

METHOD

Liquid chromatography (*2.2.29*).

Use brown glassware that is free from detergent residues. If necessary rinse glassware before use with a 10 per cent *V/V* solution of *sulfuric acid R* and then rinse carefully with *distilled water R* until no more acid is present.

Solution A. Mix 80 volumes of *water R*, previously adjusted to pH 2.3 with *anhydrous formic acid R*, and 20 volumes of *acetonitrile R*.

Test solution. Use an immunoaffinity column containing antibodies against ochratoxin A with a capacity of not less than 100 ng of ochratoxin A and which gives a recovery of not less than 70 per cent. Allow the immunoaffinity column to reach room temperature.

To 2.00 g of the powdered drug (250) (*2.9.12*) add 80 mL of a 30 g/L solution of *sodium hydrogen carbonate R* and extract by sonication for 30 min (change water of ultrasonic bath after 15 min). Cool to room temperature and dilute to 100.0 mL (V_1) with the same solution. Centrifuge. Mix thoroughly 5.0 mL (V_i) of the clear supernatant with 30 mL *buffer solution pH 7.4 R* and pass the whole solution through the immunoaffinity column at a flow rate of 3 mL/min (do not exceed 5 mL/min). Wash the column first with 10 mL *buffer solution pH 7.4 R* then with 2 quantities, each of 10 mL, of *water R* at a flow rate not exceeding 5 mL/min and dry by applying a slight vacuum for 5-10 s or by passing air through the immunoaffinity column by means of a syringe for 10 s. Apply 0.5 mL of *methanol R* to the column and allow to pass through by gravity.

Collect the eluate in a 4 mL glass vial. After 30 s, apply a 2nd quantity of 0.5 mL of *methanol R* and allow to pass through the column by gravity into the same glass vial. After a further 30 s, repeat with a 3rd portion of 0.5 mL of *methanol R*. Collect any solvent retained on the column by pressing air through or applying vacuum to the column. Evaporate the combined eluates completely to dryness using a thermal block with a nitrogen blanket (40 °C). Dissolve the residue in 0.5 mL (V_2) of solution A. If the solution is clear it can be used directly for analysis. Otherwise, pass it through a disposable filter unit prior to injection. Use a disposable filter unit (e.g. 0.45 µm pore size polytetrafluoroethylene filter) that has been shown not to cause loss of ochratoxin A by retention.

Ochratoxin A primary stock solution. Dilute 1.0 mL of *ochratoxin A solution R* to 100.0 mL with *methanol R* and shake thoroughly.

Ochratoxin A secondary stock solution. Dilute 10.0 mL of ochratoxin A primary stock solution to 100.0 mL with *methanol R* and shake thoroughly.

Ochratoxin A standard solutions. Place the volumes of ochratoxin A primary stock solution or ochratoxin A secondary stock solution indicated in Table 2.8.22.-1 into separate flasks and make up to 50.0 mL with solution A.

Table 2.8.22.-1. – *Ochratoxin A standard solutions*

Standard solution	Volume of ochratoxin A primary stock solution (µL)	Final concentration of ochratoxin A in standard solution (ng/mL)
1	5000	50
2	2500	25
3	1000	10
4	500	5
5	250	2.5
Standard solution	**Volume of ochratoxin A secondary stock solution (µL)**	**Final concentration of ochratoxin A in standard solution (ng/mL)**
6	500	0.5
7	100	0.1

Calibration curve. Prepare the calibration curve using ochratoxin A standard solutions 1 to 7, which cover a range equivalent to 0.5-250 µg/kg of ochratoxin A in the herbal drug. Check the plot for linearity. If the content of ochratoxin A in the sample to be examined is outside of the calibration range, the test solution must be diluted to an ochratoxin A content that is appropriate for the established calibration curve.

Column:

- *size*: *l* = 0.15 m, Ø = 4.6 mm;
- *stationary phase*: *octadecylsilyl silica gel for chromatography R* (5 µm);
- *temperature*: 45 °C.

Mobile phase:

- *mobile phase A*: *water R* adjusted to pH 2.3 with *phosphoric acid R*;
- *mobile phase B*: *acetonitrile R*;

Time (min)	Mobile phase A (per cent *V/V*)	Mobile phase B (per cent *V/V*)
0 - 30	80 → 40	20 → 60
30 - 35	40 → 20	60 → 80
35 - 37	20	80
37 - 40	20 → 80	80 → 20

Flow rate: 0.8 mL/min.

Detection: fluorescence detector; recommended settings for adjustable detectors are 330 nm (excitation wavelength) and 460 nm (emission wavelength).

Injection: 20 µL.

Calculation: calculate the calibration curve $y = ax + b$, with ochratoxin A concentration (in nanograms per millilitre) on the x-axis and the signal (S) on the y-axis. The ochratoxin A concentration (C) in a measured solution is equal to $\frac{S-b}{a}$.

Calculate the ochratoxin A content of the herbal drug, in nanograms per gram, using the following expression:

$$\frac{V_1 \times V_2 \times C}{m \times V_i}$$

m = mass of the herbal drug used to prepare the test solution, in grams;

V_1 = volume of dilution, in millilitres;

V_i = aliquot taken for immunoaffinity clean-up, in millilitres;

V_2 = volume in which the residue is taken up, in millilitres;

C = measured ochratoxin A concentration of the test solution, in nanograms per millilitre.

Appendix: Decontamination procedures for laboratory glassware

Rinse glassware with *methanol R* and decontaminate by immersion in *strong sodium hypochlorite solution R* for at least 2 h, then wash thoroughly with water.

04/2010:20823

2.8.23. MICROSCOPIC EXAMINATION OF HERBAL DRUGS

The microscopic examination of herbal drugs is carried out on the powdered drug (355) (*2.9.12*) unless otherwise prescribed in the monograph.

Chloral hydrate solution R is the most commonly prescribed reagent. However, certain features are not visible or not easily seen after mounting in this reagent. In this case, other reagents are used, for example, a 50 per cent *V/V* solution of *glycerol R*, which makes it possible to visualise starch granules. It may also be necessary to prescribe specific reagents in a monograph, for example: *lactic reagent R* which is used to show the presence of various features, 10 per cent *V/V* alcoholic solution of *phloroglucinol R* and *hydrochloric acid R*, which are used to identify the presence of lignin in cells or tissues, *ruthenium red solution R*, which is used to show the presence of mucilage in cells or *glycerol R* used to show the presence of starch and inulin.

Examination under polarised light (between crossed nicol prisms) is used to identify starch granules (black cross phenomenon), calcium oxalate crystals (refringence) or lignified structures.

MOUNTING IN CHLORAL HYDRATE SOLUTION

Place 2-3 drops of *chloral hydrate solution R* on a glass microscope slide. Disperse a very small quantity of the powdered drug in the liquid and cover the preparation with a cover slip. Heat the preparation very gently to boiling on a hot plate or a micro gas burner. Maintain gentle boiling for a short time. Make sure that the quantity of mounting fluid is sufficient. If necessary, add more fluid using a tapered glass pipette. Allow to cool and then examine under a microscope. Repeat the heating until the starch granules and the water-soluble contents of the cells are no longer visible. Examine under a microscope.

Chloral hydrate tends to crystallise as long needles. To avoid this, proceed as follows: after heating, remove the cover slip; to the preparation add 1 drop of a 10 per cent *V/V* mixture of *chloral hydrate solution R* in *glycerol R*; place a clean cover slip on the preparation; examine under a microscope.

MOUNTING IN A 50 PER CENT *V/V* SOLUTION OF GLYCEROL

Place 2 drops of a 50 per cent *V/V* solution of *glycerol R* on a glass microscope slide. Disperse a very small quantity of the powdered drug in the liquid and cover the preparation with a cover slip. Examine under a microscope.

MOUNTING IN A 10 PER CENT *V/V* ALCOHOLIC SOLUTION OF PHLOROGLUCINOL AND HYDROCHLORIC ACID

Place a very small quantity of the powdered drug on a glass microscope slide. Add 1-2 drops of a 10 per cent *V/V* alcoholic solution of *phloroglucinol R*. Mix and allow the solvent to evaporate almost completely. Add 1-2 drops of *hydrochloric acid R* and cover the preparation with a cover slip. Examine immediately under a microscope. The red colour indicates the presence of lignin.

MOUNTING IN LACTIC REAGENT

Place 2-3 drops of *lactic reagent R* on a glass microscope slide. Disperse a very small quantity of the powdered drug in the liquid and cover the preparation with a cover slip. Heat the preparation very gently to boiling. Maintain gentle boiling for a short time. Make sure that the quantity of mounting fluid is sufficient. If necessary, add more fluid using a tapered glass pipette. Allow to cool and then examine under a microscope. Lignified structures stain bright yellow; structures containing cellulose remain colourless. Starch granules stain more or less violet; certain secretions (e.g., essential oils, resins, oleoresins) stain orange and cork stains red.

MOUNTING IN RUTHENIUM RED SOLUTION

Place 2 drops of *ruthenium red solution R* on a glass microscope slide. Disperse a very small quantity of the powdered drug in the liquid and cover the preparation with a cover slip. After about 1 minute, allow a drop of *distilled water R* to be taken up between the slide and the cover slip. Examine under a microscope. The mucilage stains violet red.

2.9. PHARMACEUTICAL TECHNICAL PROCEDURES

04/2011:20901

2.9.1. DISINTEGRATION OF TABLETS AND CAPSULES[(1)]

This test is provided to determine whether tablets or capsules disintegrate within the prescribed time when placed in a liquid medium under the experimental conditions presented below.

For the purposes of this test, disintegration does not imply complete dissolution of the unit or even of its active constituent. Complete disintegration is defined as that state in which any residue of the unit, except fragments of insoluble coating or capsule shell, remaining on the screen of the test apparatus or adhering to the lower surface of the discs, if used, is a soft mass having no palpably firm core.

♦Use apparatus A for tablets and capsules that are not greater than 18 mm long. For larger tablets or capsules use apparatus B.♦

TEST A - TABLETS AND CAPSULES OF NORMAL SIZE

Apparatus. The apparatus consists of a basket-rack assembly, a 1 L, low-form beaker, 149 ± 11 mm in height and having an inside diameter of 106 ± 9 mm for the immersion fluid, a thermostatic arrangement for heating the fluid between 35 °C and 39 °C, and a device for raising and lowering the basket in the immersion fluid at a constant frequency rate between 29 and 32 cycles per minute, through a distance of 55 ± 2 mm. The volume of the fluid in the vessel is such that at the highest point of the upward stroke the wire mesh remains at least 15 mm below the surface of the fluid, and descends to not less than 25 mm from the bottom of the vessel on the downward stroke. At no time should the top of the basket-rack assembly become submerged. The time required for the upward stroke is equal to the time required for the downward stroke, and the change in stroke direction is a smooth transition, rather than an abrupt reversal of motion. The basket-rack assembly moves vertically along its axis. There is no appreciable horizontal motion or movement of the axis from the vertical.

Basket-rack assembly. The basket-rack assembly consists of 6 open-ended transparent tubes, each 77.5 ± 2.5 mm long and having an inside diameter of 21.85 ± 1.15 mm and a wall 1.9 ± 0.9 mm thick; the tubes are held in a vertical position by 2 plates, each 90 ± 2 mm in diameter and 6.75 ± 1.75 mm in thickness, with 6 holes, each 24 ± 2 mm in diameter, equidistant from the centre of the plate and equally spaced from one another. Attached to the under surface of the lower plate is a woven stainless steel wire cloth, which has a plain square weave with 2.0 ± 0.2 mm mesh apertures and with a wire diameter of 0.615 ± 0.045 mm. The parts of the apparatus are assembled and rigidly held by means of 3 bolts passing through the 2 plates. A suitable means is provided to suspend the basket-rack assembly from the raising and lowering device using a point on its axis.

The design of the basket-rack assembly may be varied somewhat provided the specifications for the glass tubes and the screen mesh size are maintained. The basket-rack assembly conforms to the dimensions shown in Figure 2.9.1.-1.

Discs. The use of discs is permitted only where specified or allowed. Each tube is provided with a cylindrical disc 9.5 ± 0.15 mm thick and 20.7 ± 0.15 mm in diameter. The disc is made of a suitable, transparent plastic material having a specific gravity of 1.18-1.20. 5 parallel 2 ± 0.1 mm holes extend between the ends of the cylinder. One of the holes is centered on the cylindrical axis. The other holes are centered 6 ± 0.2 mm from the axis on imaginary lines perpendicular to the axis and parallel to each other. 4 identical trapezoidal-shaped planes are cut into the wall of the cylinder, nearly perpendicular to the ends of the cylinder. The trapezoidal shape is symmetrical; its parallel sides coincide with the ends of the cylinder and are parallel to an imaginary line connecting the centres of 2 adjacent holes 6 mm from the cylindrical axis. The parallel side of the trapezoid on the bottom of the cylinder has a length of 1.6 ± 0.1 mm and its bottom edges lie at a depth of 1.5 mm to 1.8 mm from the cylinder's circumference. The parallel side of the trapezoid on the top of the cylinder has a length of 9.4 ± 0.2 mm and its centre lies at a depth of 2.6 ± 0.1 mm from the cylinder's circumference. All surfaces of the disc are smooth.

If the use of discs is specified, add a disc to each tube and operate the apparatus as directed under Procedure. The discs conform to the dimensions shown in Figure 2.9.1.-1.

The use of automatic detection employing modified discs is permitted where the use of discs is specified or allowed. Such discs must comply with the requirements of density and dimension given in this chapter.

Procedure. Place 1 dosage unit in each of the 6 tubes of the basket and, if prescribed, add a disc. Operate the apparatus using the specified medium, maintained at 37 ± 2 °C, as the immersion fluid. At the end of the specified time, lift the basket from the fluid and observe the dosage units: all of the dosage units have disintegrated completely. If 1 or 2 dosage units fail to disintegrate, repeat the test on 12 additional dosage units. The requirements of the test are met if not less than 16 of the 18 dosage units tested have disintegrated.

♦TEST B – LARGE TABLETS AND LARGE CAPSULES

Apparatus. The main part of the apparatus (Figure 2.9.1.-2.) is a rigid basket-rack assembly supporting 3 cylindrical transparent tubes 77.5 ± 2.5 mm long, 33.0 mm ± 0.5 mm in internal diameter, and with a wall thickness of 2.5 ± 0.5 mm. Each tube is provided with a cylindrical disc 31.4 ± 0.13 mm in diameter and 15.3 ± 0.15 mm thick, made of transparent plastic with a relative density of 1.18-1.20. Each disc is pierced by 7 holes, each 3.15 ± 0.1 mm in diameter, 1 in the centre and the other 6 spaced equally on a circle of radius 4.2 mm from the centre of the disc. The tubes are held vertically by 2 separate and superimposed rigid plastic plates 97 mm in diameter and 9 mm thick, with 3 holes. The holes are equidistant from the centre of the plate and equally spaced. Attached to the under side of the lower plate is a piece of woven gauze made from stainless steel wire 0.63 ± 0.03 mm in diameter and having mesh apertures of 2.0 ± 0.2 mm. The plates are held rigidly in position and 77.5 mm apart by vertical metal rods at the periphery. A metal rod is also fixed to the centre of the upper plate to enable the assembly to be attached to a mechanical device capable of raising and lowering it smoothly at a constant frequency of between 29 and 32 cycles per minute, through a distance of 55 ± 2 mm.

The assembly is suspended in the specified liquid medium in a suitable vessel, preferably a 1 L beaker. The volume of the liquid is such that when the assembly is in the highest position the wire mesh is at least 15 mm below the surface of the liquid, and when the assembly is in the lowest position the wire mesh is at least 25 mm above the bottom of the beaker and the upper open ends of the tubes remain above the surface of the liquid. A suitable device maintains the temperature of the liquid at 35-39 °C.

The design of the basket-rack assembly may be varied provided the specifications for the tubes and wire mesh are maintained.

(1) This chapter has undergone pharmacopoeial harmonisation. See chapter *5.8. Pharmacopoeial harmonisation*.

Method. Test 6 tablets or capsules either by using 2 basket-rack assemblies in parallel or by repeating the procedure. In each of the 3 tubes, place 1 tablet or capsule and, if prescribed, add a disc; suspend the assembly in the beaker containing the specified liquid. Operate the apparatus for the prescribed period, withdraw the assembly and examine the state of the tablets or capsules. To pass the test, all 6 of the tablets or capsules must have disintegrated.♦

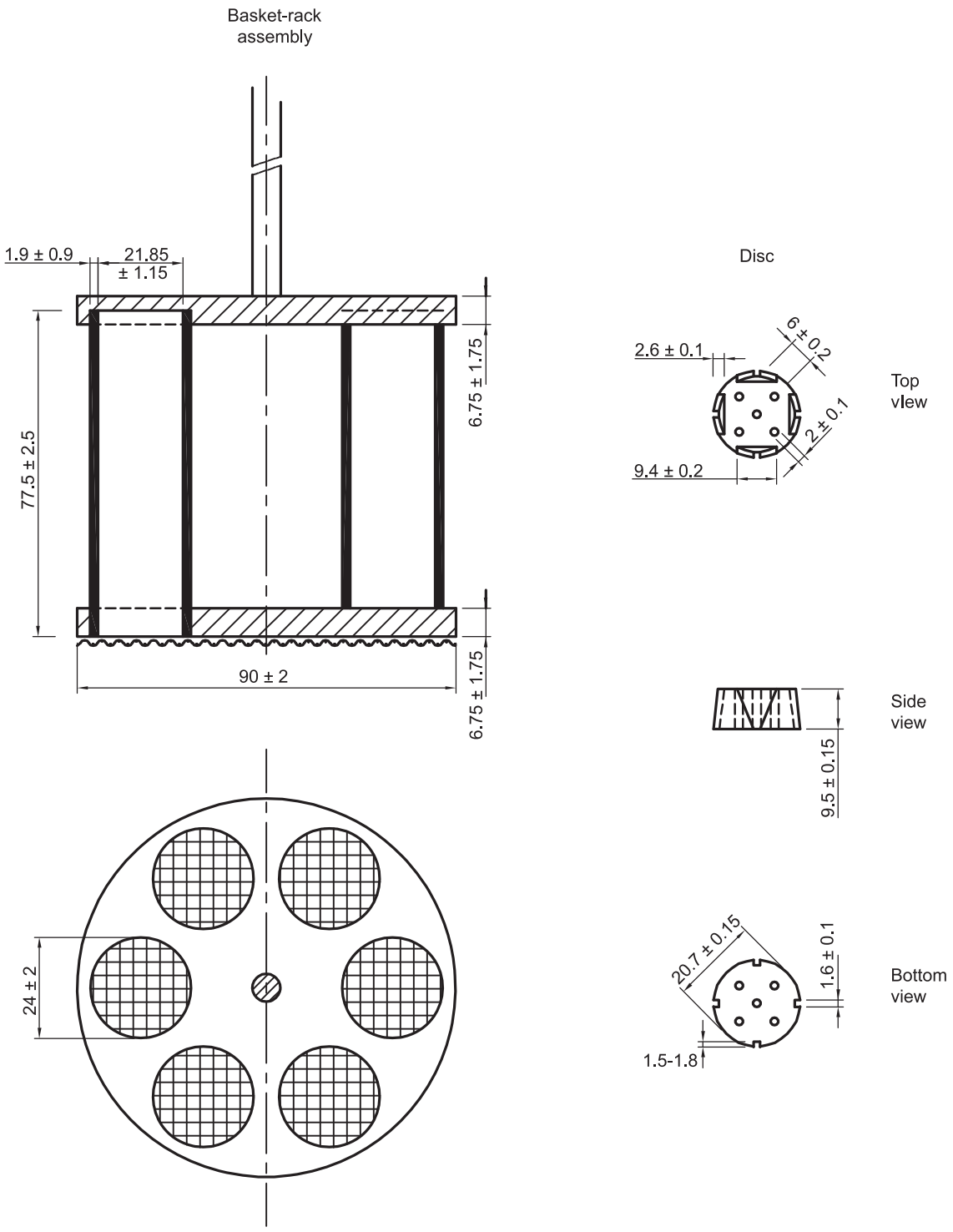

Figure 2.9.1.-1. – *Disintegration apparatus A*

Dimensions in millimetres

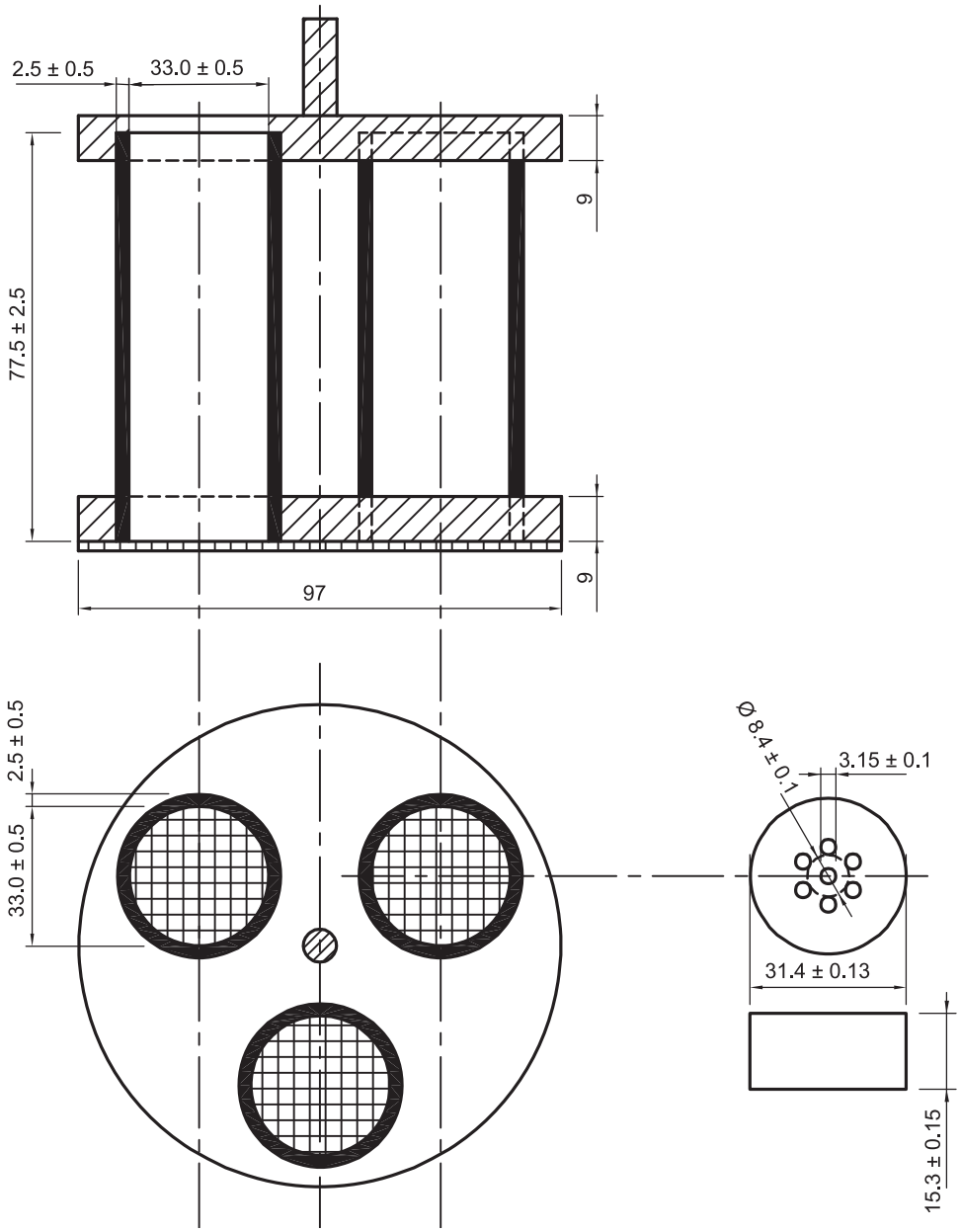

Figure 2.9.1.-2. – *Disintegration apparatus B*
Dimensions in millimetres

01/2008:20902

2.9.2. DISINTEGRATION OF SUPPOSITORIES AND PESSARIES

The disintegration test determines whether the suppositories or pessaries soften or disintegrate within the prescribed time when placed in a liquid medium in the experimental conditions described below.

Disintegration is considered to be achieved when:

a) dissolution is complete,

b) the components of the suppository or pessary have separated: melted fatty substances collect on the surface of the liquid, insoluble powders fall to the bottom and soluble components dissolve, depending on the type of preparation, the components may be distributed in one or more of these ways,

c) there is softening of the sample that may be accompanied by appreciable change of shape without complete separation of the components, the softening is such that the suppository or pessary no longer has a solid core offering resistance to pressure of a glass rod,

d) rupture of the gelatin shell of rectal or vaginal capsules occurs allowing release of the contents,

e) no residue remains on the perforated disc or if a residue remains, it consists only of a soft or frothy mass having no solid core offering resistance to pressure of a glass rod (vaginal tablets).

Apparatus. The apparatus (Figure 2.9.2.-1) consists of a sleeve of glass or suitable transparent plastic, of appropriate thickness, to the interior of which is attached by means of three hooks a metal device consisting of two perforated stainless metal discs each containing 39 holes 4 mm in diameter; the diameter of the discs is similar to that of the interior of the sleeve; the discs are about 30 mm apart. The test is carried out using three such apparatuses each containing a single sample. Each apparatus is placed in a beaker with a capacity of at least 4 L filled with water maintained at 36-37 °C, unless otherwise prescribed. The apparatuses may also be placed together in a vessel with a capacity of at least 12 L. The beaker is fitted with a slow stirrer and a device that will hold the cylinders vertically not less than 90 mm below the surface of the water and allow them to be inverted without emerging from the water.

Method. Use three suppositories or pessaries. Place each one on the lower disc of a device, place the latter in the sleeve and secure. Invert the apparatuses every 10 min. Examine the samples after the period prescribed in the monograph. To pass the test all the samples must have disintegrated.

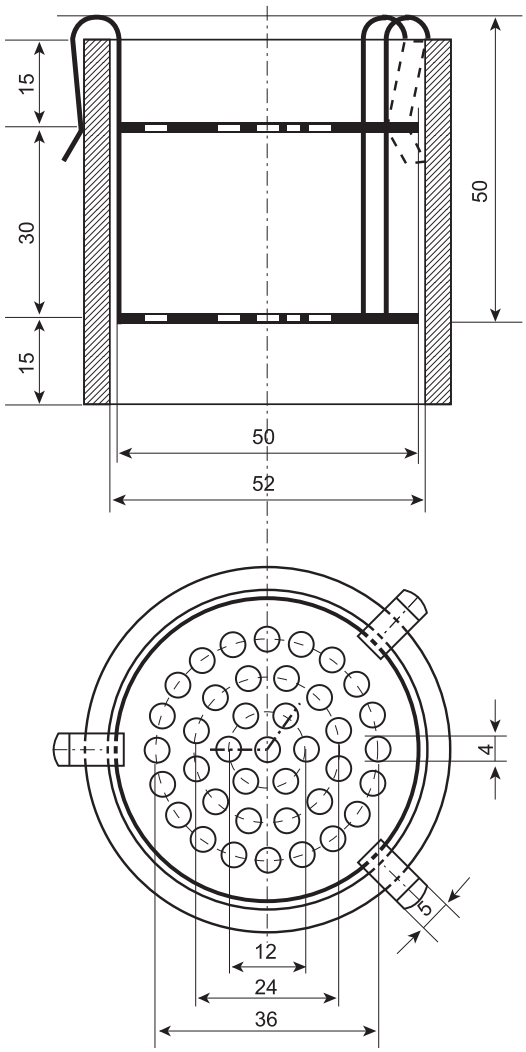

Figure 2.9.2.-1. – *Apparatus for disintegration of suppositories and pessaries*

Dimensions in millimetres

METHOD OF OPERATION FOR VAGINAL TABLETS

Use the apparatus described above, arranged so as to rest on the hooks (see Figure 2.9.2.-2). Place it in a beaker of suitable diameter containing water maintained at 36-37 °C with the level just below the upper perforated disc. Using a pipette, adjust the level with water at 36-37 °C until a uniform film covers the perforations of the disc. Use three vaginal tablets. Place each one on the upper plate of an apparatus and cover the latter with a glass plate to maintain appropriate conditions of humidity. Examine the state of the samples after the period prescribed in the monograph. To pass the test all the samples must have disintegrated.

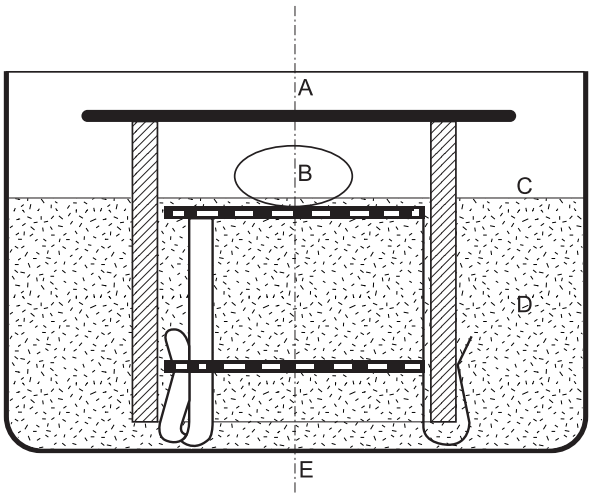

A. glass plate
B. vaginal tablet
C. water surface
D. water
E. dish, beaker

Figure 2.9.2.-2.

01/2012:20903

2.9.3. DISSOLUTION TEST FOR SOLID DOSAGE FORMS

This test is provided to determine compliance with the dissolution requirements for solid dosage forms administered orally. In this chapter, a dosage unit is defined as 1 tablet or 1 capsule or the amount specified.

APPARATUS

Apparatus 1 (Basket apparatus). The assembly consists of the following: a vessel, which may be covered, made of glass or other inert, transparent material(2); a motor; a drive shaft; and a cylindrical basket (stirring element). The vessel is partially immersed in a suitable water-bath of any convenient size or heated by a suitable device such as a heating jacket. The water-bath or heating device permits maintaining the temperature inside the vessel at 37 ± 0.5 °C during the test and keeping the dissolution medium in constant, smooth motion. No part of the assembly, including the environment in which the assembly is placed, contributes significant motion, agitation, or vibration beyond that due to the smoothly rotating stirring element. Apparatus that permits observation of the preparation and stirring element during the test is preferable. The vessel is cylindrical, with a hemispherical bottom and a capacity of 1 L. Its height is 160-210 mm and its inside diameter is 98-106 mm. Its sides are flanged at the top. A fitted cover may be used to retard evaporation(3). The shaft is positioned so that its axis is not more than 2 mm at any point from the vertical axis of the vessel and rotates smoothly and without significant wobble that could affect the results. A speed-regulating device is used that allows the shaft rotation speed to be selected and maintained at a specified rate, within ± 4 per cent.

Shaft and basket components of the stirring element are fabricated of stainless steel, type 316 or equivalent, to the specifications shown in Figure 2.9.3.-1.

(2) The materials must not sorb, react, or interfere with the preparation to be tested.
(3) If a cover is used, it provides sufficient openings to allow ready insertion of the thermometer and withdrawal of samples.

A basket having a gold coating of about 2.5 µm (0.0001 inch) thick may be used. The dosage unit is placed in a dry basket at the beginning of each test. The distance between the inside bottom of the vessel and the bottom of the basket is maintained at 25 ± 2 mm during the test.

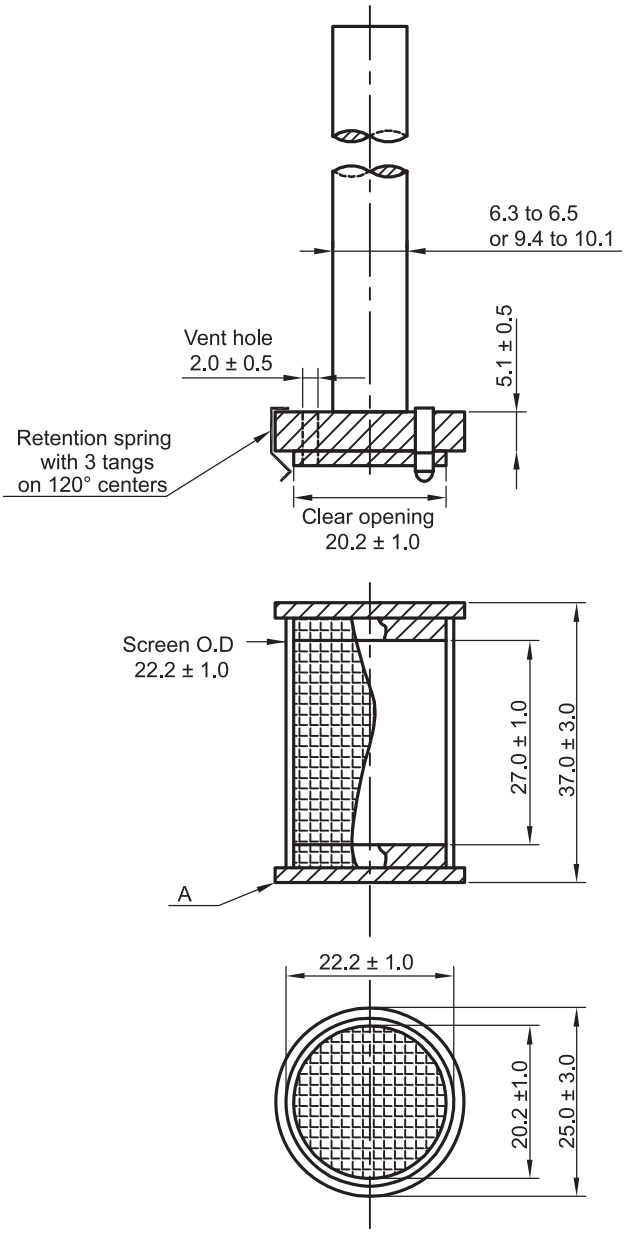

1) Screen with welded seam: 0.22-0.31 mm wire diameter with wire opening of 0.36-0.44 mm. After welding the screen may be slighty altered.

2) Maximum allowable runout at "A" is 1.0 mm when the part is rotated on center line axis with basket mounted.

Figure 2.9.3.-1. – *Apparatus 1, Basket stirring element*

Dimensions in millimetres

Apparatus 2 (Paddle apparatus). Use the assembly from Apparatus 1, except that a paddle formed from a blade and a shaft is used as the stirring element. The shaft is positioned so that its axis is not more than 2 mm from the vertical axis of the vessel, at any point, and rotates smoothly without significant wobble that could affect the results. The vertical center line of the blade passes through the axis of the shaft so that the bottom of the blade is flush with the bottom of the shaft. The paddle conforms to the specifications shown in Figure 2.9.3.-2. The distance of 25 ± 2 mm between the bottom of the blade and the inside bottom of the vessel is maintained during the test. The metallic or suitably inert, rigid blade and shaft comprise a single entity. A suitable two-part detachable design may be used provided the assembly remains firmly engaged during the test. The paddle blade and shaft may be coated with a suitable coating so as to make them inert. The dosage unit is allowed to sink to the bottom of the vessel before rotation of the blade is started. A small, loose piece of non-reactive material, such as not more than a few turns of wire helix, may be attached to dosage units that would otherwise float. An alternative sinker device is shown in Figure 2.9.3.-3. Other validated sinker devices may be used.

Apparatus 3 (Reciprocating cylinder). The assembly consists of a set of cylindrical, flat-bottomed glass vessels; a set of glass reciprocating cylinders; inert fittings (stainless steel type 316 or other suitable material) and screens that are made of suitable nonsorbing and nonreactive material, and that are designed to fit the tops and bottoms of the reciprocating cylinders; a motor and drive assembly to reciprocate the cylinders vertically inside the vessels, and if desired, index the reciprocating cylinders horizontally to a different row of vessels. The vessels are partially immersed in a suitable water-bath of any convenient size that permits holding the temperature at 37 ± 0.5 °C during the test. No part of the assembly, including the environment in which the assembly is placed, contributes significant motion, agitation, or vibration beyond that due to the smooth, vertically reciprocating cylinder. A device is used that allows the reciprocation rate to be selected and maintained at the specified dip rate, within ± 5 per cent. An apparatus that permits observation of the preparations and reciprocating cylinders is preferable. The vessels are provided with an evaporation cap that remains in place for the duration of the test. The components conform to the dimensions shown in Figure 2.9.3.-4 unless otherwise specified.

Apparatus 4 (Flow-through cell). The assembly consists of a reservoir and a pump for the dissolution medium; a flow-through cell; a water-bath that maintains the dissolution medium at 37 ± 0.5 °C. Use the specified cell size.

The pump forces the dissolution medium upwards through the flow-through cell. The pump has a delivery range between 240 mL/h and 960 mL/h, with standard flow rates of 4 mL/min, 8 mL/min, and 16 mL/min. It must deliver a constant flow (± 5 per cent of the nominal flow rate); the flow profile is sinusoidal with a pulsation of 120 ± 10 pulses/min. A pump without pulsation may also be used. Dissolution test procedures using the flow-through cell must be characterised with respect to rate and any pulsation.

The flow-through cell (see Figures 2.9.3.-5 and 2.9.3.-6) of transparent and inert material is mounted vertically, with a filter system that prevents escape of undissolved particles from the top of the cell; standard cell diameters are 12 mm and 22.6 mm; the bottom cone is usually filled with small glass beads of about 1 mm diameter, with 1 bead of about 5 mm positioned at the apex to protect the fluid entry tube; a tablet holder (see Figures 2.9.3.-5 and 2.9.3.-6) is available for positioning of special dosage forms. The cell is immersed in a water-bath, and the temperature is maintained at 37 ± 0.5 °C.

The apparatus uses a clamp mechanism and 2 O-rings for the fixation of the cell assembly. The pump is separated from the dissolution unit in order to shield the latter against any vibrations originating from the pump. The position of the pump must not be on a level higher than the reservoir flasks. Tube connections are as short as possible. Use suitably inert tubing, such as polytetrafluoroethylene, with a 1.6 mm inner diameter and inert flanged-end connections.

Apparatus suitability. The determination of suitability of the apparatus to perform dissolution testing must include conformance to the dimensions and tolerances of the apparatus as given above. In addition, critical test parameters that have to be monitored periodically during use include

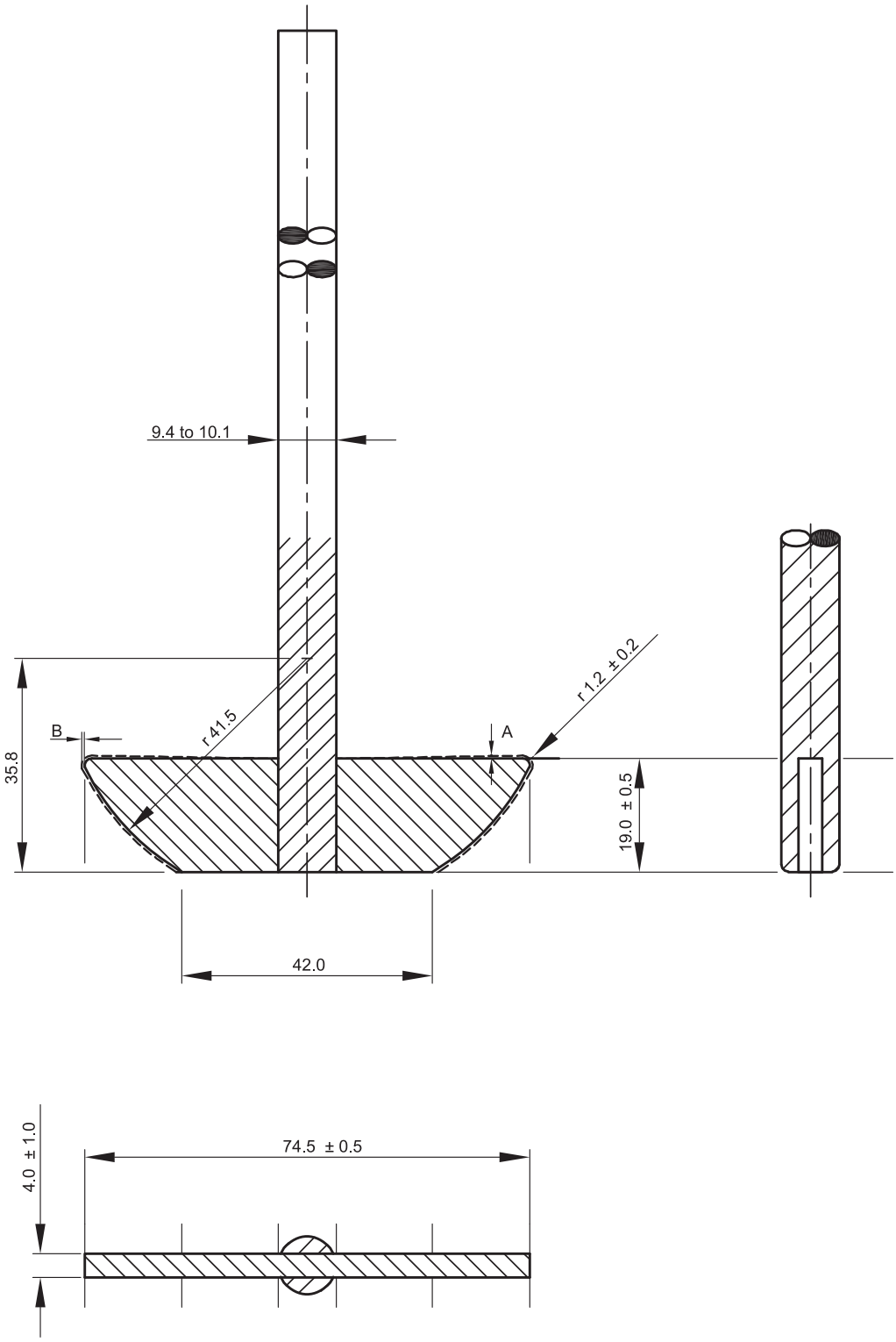

A and B dimensions do not vary more than 0.5 mm when part is rotated on center line axis. Tolerances are ± 1.0 mm unless otherwise stated.

Figure 2.9.3.-2. – *Apparatus 2, Paddle stirring element*
Dimensions in millimetres

volume and temperature of the dissolution medium, rotation speed (Apparatus 1 and 2), dip rate (Apparatus 3), and flow rate of medium (Apparatus 4).

Determine the acceptable performance of the dissolution test assembly periodically.

PROCEDURE

APPARATUS 1 AND 2

Conventional-release solid dosage forms

Procedure. Place the stated volume of the dissolution medium (± 1 per cent) in the vessel of the specified apparatus. Assemble the apparatus, equilibrate the dissolution medium to 37 ± 0.5 °C, and remove the thermometer. The test may also be carried out with the thermometer in place, provided it is shown that results equivalent to those obtained without the thermometer are obtained.

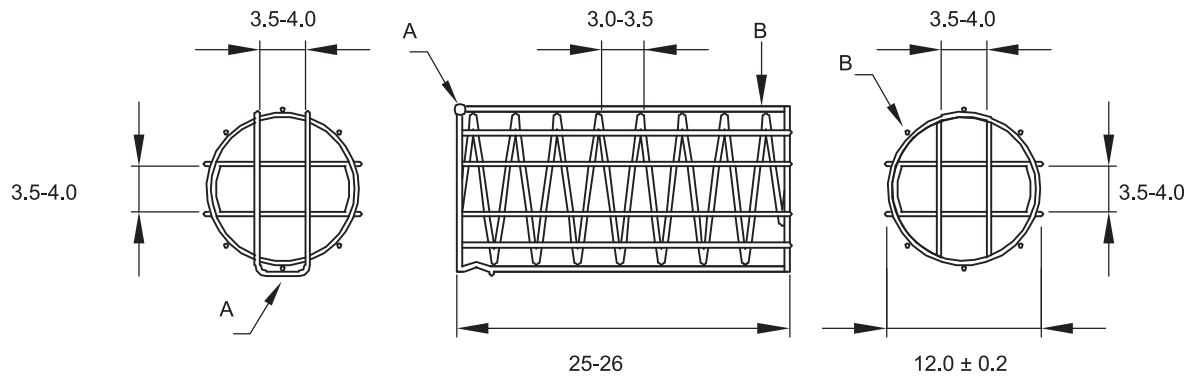

A: acid-resistant wire clasp B: acid-resistant wire support

Figure 2.9.3.-3. – *Alternative sinker*
Dimensions in millimetres

Place 1 dosage unit in the apparatus, taking care to exclude air bubbles from the surface of the dosage unit. Operate the apparatus at the specified rate. Within the time interval specified, or at each of the times stated, withdraw a specimen from a zone midway between the surface of the dissolution medium and the top of the rotating basket or blade, not less than 1 cm from the vessel wall. Where multiple sampling times are specified, replace the aliquots withdrawn for analysis with equal volumes of fresh dissolution medium at 37 °C or, where it can be shown that replacement of the medium is not necessary, correct for the volume change in the calculation. Keep the vessel covered for the duration of the test and verify the temperature of the medium at suitable times. Perform the analysis using a suitable assay method(4). Repeat the test with additional dosage units.

If automated equipment is used for sampling or the apparatus is otherwise modified, verification that the modified apparatus will produce results equivalent to those obtained with the apparatus described in this chapter, is necessary.

Dissolution medium. A suitable dissolution medium is used. The volume specified refers to measurements made between 20 °C and 25 °C. If the dissolution medium is a buffered solution, adjust the solution so that its pH is within 0.05 units of the specified pH. Dissolved gases can cause bubbles to form, which may change the results of the test. In such cases, dissolved gases must be removed prior to testing(5).

Time. Where a single time specification is given, the test may be concluded in a shorter period if the requirement for minimum amount dissolved is met. Samples are to be withdrawn only at the stated times, within a tolerance of ± 2 per cent.

Prolonged-release solid dosage forms

Procedure. Proceed as described for conventional-release dosage forms.

Dissolution medium. Proceed as described for conventional-release dosage forms.

Time. The test-time points, generally 3, are expressed in hours.

Delayed-release solid dosage forms

Procedure. Use Method A or Method B.

Method A

- *Acid stage.* Place 750 mL of *0.1 M hydrochloric acid* in the vessel, and assemble the apparatus. Allow the medium to equilibrate to a temperature of 37 ± 0.5 °C. Place 1 dosage unit in the apparatus, cover the vessel and operate the apparatus at the specified rate. After 2 h of operation in *0.1 M hydrochloric acid*, withdraw an aliquot of the fluid and proceed immediately as directed under Buffer stage. Perform an analysis of the aliquot using a suitable assay method.
- *Buffer stage.* Complete the operations of adding the buffer and adjusting the pH within 5 min. With the apparatus operating at the rate specified, add to the fluid in the vessel 250 mL of a 0.20 M solution of *trisodium phosphate dodecahydrate R* that has been equilibrated to 37 ± 0.5 °C. Adjust, if necessary, with *2 M hydrochloric acid R* or *2 M sodium hydroxide R* to a pH of 6.8 ± 0.05. Continue to operate the apparatus for 45 min, or for the specified time. At the end of the time period, withdraw an aliquot of the fluid and perform the analysis using a suitable assay method.

Method B

- *Acid Stage.* Place 1000 mL of *0.1 M hydrochloric acid* in the vessel and assemble the apparatus. Allow the medium to equilibrate to a temperature of 37 ± 0.5 °C. Place 1 dosage unit in the apparatus, cover the vessel, and operate the apparatus at the specified rate. After 2 h of operation in *0.1 M hydrochloric acid*, withdraw an aliquot of the fluid, and proceed immediately as directed under Buffer stage. Perform an analysis of the aliquot using a suitable assay method.
- *Buffer stage.* For this stage of the procedure use buffer that has previously been equilibrated to a temperature of 37 ± 0.5 °C. Drain the acid from the vessel and add 1000 mL of pH 6.8 phosphate buffer, prepared by mixing 3 volumes of *0.1 M hydrochloric acid* with 1 volume of a 0.20 M solution of *trisodium phosphate dodecahydrate R* and adjusting, if necessary, with *2 M hydrochloric acid R* or *2 M sodium hydroxide R* to a pH of 6.8 ± 0.05. This may also be accomplished by removing from the apparatus the vessel containing the acid and replacing it with another vessel, containing the buffer and transferring the dosage unit to the vessel containing the buffer. Continue to operate the apparatus for 45 min, or for the specified time. At the end of the time period, withdraw an aliquot of the fluid and perform the analysis using a suitable assay method.

Time. All test times stated are to be observed within a tolerance of ± 2 per cent, unless otherwise specified.

(4) Test specimens are filtered immediately upon sampling unless filtration is demonstrated to be unnecessary. Use an inert filter that does not cause adsorption of the active substance or contain extractable substances that would interfere with the analysis.
(5) A method of deaeration is as follows: heat the medium, while stirring gently, to about 41 °C, immediately filter under vacuum using a filter having a porosity of 0.45 µm or less, with vigorous stirring, and continue stirring under vacuum for about 5 min. Other validated deaeration techniques for removal of dissolved gases may be used.

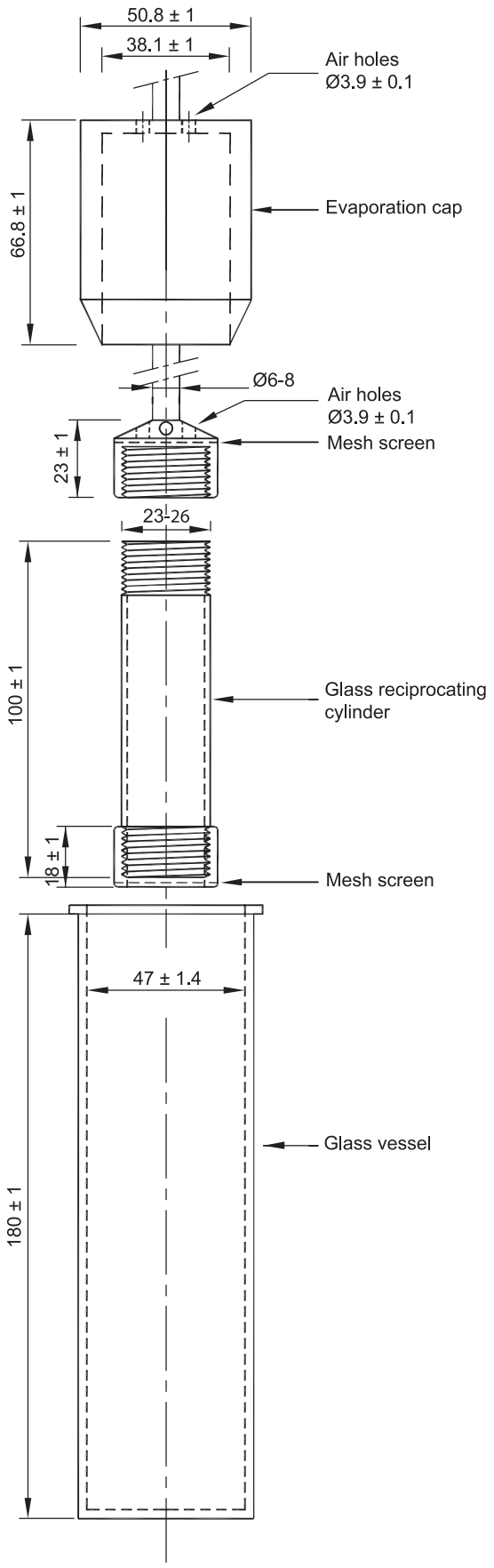

Figure 2.9.3.-4. – *Apparatus 3, glass vessel and reciprocating cylinder*

Dimensions in millimetres unless otherwise specified

APPARATUS 3

Conventional-release solid dosage forms

Procedure. Place the stated volume of the dissolution medium (± 1 per cent) in each vessel of the apparatus. Assemble the apparatus, equilibrate the dissolution medium to 37 ± 0.5 °C, and remove the thermometer. Place 1 dosage unit in each of the reciprocating cylinders, taking care to exclude air bubbles from the surface of each dosage unit, and immediately operate the apparatus as specified. During the upward and downward stroke, the reciprocating cylinder moves through a total distance of 9.9-10.1 cm. Within the time interval specified, or at each of the times stated, raise the reciprocating cylinders and withdraw a portion of the medium from a zone midway between the surface of the dissolution medium and the bottom of each vessel. Perform the analysis as directed. If necessary, repeat the test with additional dosage units.

Replace the aliquot withdrawn for analysis with equal volumes of fresh dissolution medium at 37 °C or, where it can be shown that replacement of the medium is not necessary, correct for the volume change in the calculation. Keep the vessel covered with the evaporation cap for the duration of the test and verify the temperature of the medium at suitable times.

Dissolution medium. Proceed as described for conventional-release dosage forms under Apparatus 1 and 2.

Time. Proceed as described for conventional-release dosage forms under Apparatus 1 and 2.

Prolonged-release dosage forms

Procedure. Proceed as described for conventional-release dosage forms under Apparatus 3.

Dissolution medium. Proceed as described for prolonged-release dosage forms under Apparatus 1 and 2.

Time. Proceed as described for prolonged-release dosage forms under Apparatus 1 and 2.

Delayed-release dosage forms

Procedure. Proceed as described for delayed-release dosage forms, Method B, under Apparatus 1 and 2, using one row of vessels for the acid stage media and the following row of vessels for the buffer stage media, and using the volume of medium specified (usually 300 mL).

Time. Proceed as directed for delayed-release dosage forms under Apparatus 1 and 2.

APPARATUS 4

Conventional-release dosage forms

Procedure. Place the glass beads into the cell specified. Place 1 dosage unit on top of the beads or, if specified, on a wire carrier. Assemble the filter head and fix the parts together by means of a suitable clamping device. Introduce by the pump the dissolution medium warmed to 37 ± 0.5 °C through the bottom of the cell to obtain the flow rate specified and measured with an accuracy of 5 per cent. Collect the eluate by fractions at each of the times stated. Perform the analysis as directed. Repeat the test with additional dosage units.

Dissolution medium. Proceed as described for conventional-release dosage forms under Apparatus 1 and 2.

Time. Proceed as described for conventional-release dosage forms under Apparatus 1 and 2.

Prolonged-release dosage forms

Procedure. Proceed as described for conventional-release dosage forms under Apparatus 4.

Dissolution medium. Proceed as described for conventional-release dosage forms under Apparatus 4.

Time. Proceed as described for conventional-release dosage forms under Apparatus 4.

Delayed-release dosage forms

Procedure. Proceed as described for delayed-release dosage forms under Apparatus 1 and 2, using the specified media.

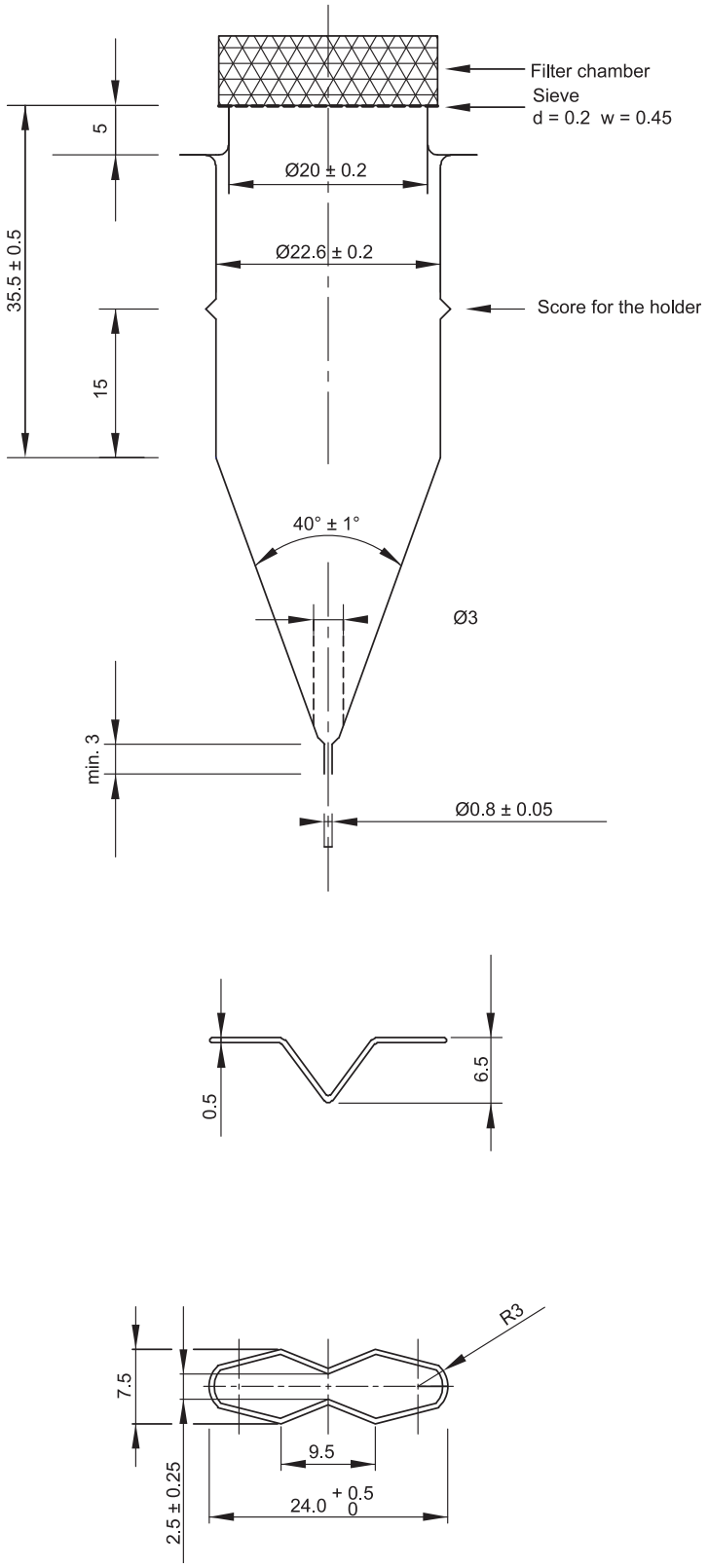

Figure 2.9.3.-5. – *Apparatus 4, large cell for tablets and capsules (top), tablet holder for the large cell (bottom)*
Dimensions in millimetres unless otherwise specified

Time. Proceed as described for delayed-release dosage forms under Apparatus 1 and 2.

INTERPRETATION

Conventional-release solid dosage forms

Unless otherwise specified, the requirements are met if the quantities of active substance dissolved from the dosage units tested conform to Table 2.9.3.-1. Continue testing through the 3 levels unless the results conform at either S_1 or S_2. The quantity Q, is the specified amount of dissolved active substance, expressed as a percentage of the labelled content; the 5 per cent, 15 per cent, and 25 per cent values in the Table are percentages of the labelled content so that these values and Q are in the same terms.

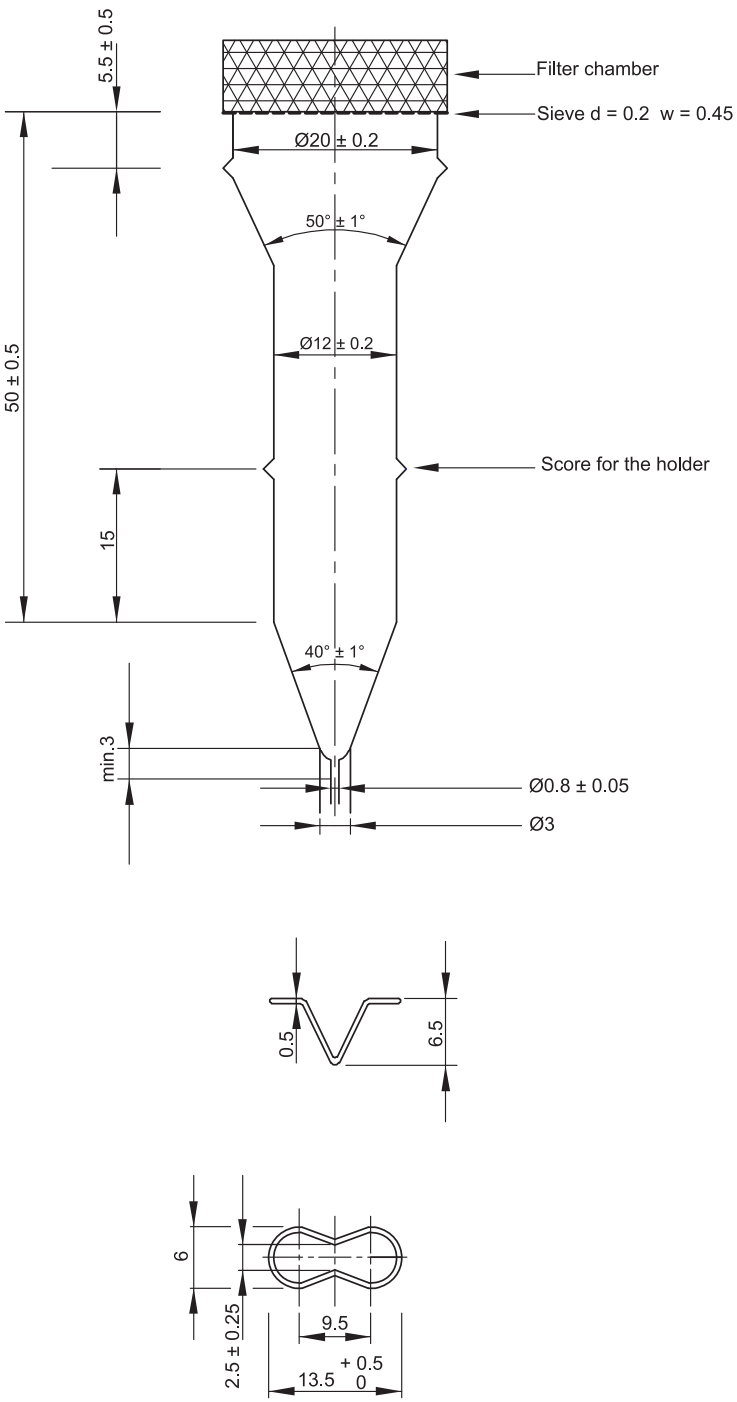

Figure 2.9.3.-6. – *Apparatus 4, small cell for tablets and capsules (top), tablet holder for the small cell (bottom)*

Dimensions in millimetres unless otherwise specified

Table 2.9.3.-1

Level	Number tested	Acceptance criteria
S_1	6	Each unit is not less than Q + 5 per cent.
S_2	6	Average of 12 units (S_1 + S_2) is equal to or greater than Q, and no unit is less than Q – 15 per cent.
S_3	12	Average of 24 units (S_1 + S_2 + S_3) is equal to or greater than Q, not more than 2 units are less than Q – 15 per cent, and no is less than Q – 25 per cent.

Prolonged-release dosage forms

Unless otherwise specified, the requirements are met if the quantities of active substance dissolved from the dosage units tested conform to Table 2.9.3.-2. Continue testing through the 3 levels unless the results conform at either L_1 or L_2. Limits on the amounts of active substance dissolved are expressed in terms of the percentage of labelled content. The limits embrace each value of Q_i, the amount dissolved at each specified fractional dosing interval. Where more than one range is specified, the acceptance criteria apply individually to each range.

Table 2.9.3.-2

Level	Number tested	Acceptance criteria
L_1	6	No individual value lies outside each of the stated ranges and no individual value is less than the stated amount at the final test time.
L_2	6	The average value of the 12 units ($L_1 + L_2$) lies within each of the stated ranges and is not less than the stated amount at the final test time; none is more than 10 per cent of labelled content outside each of the stated ranges; and none is more than 10 per cent of labelled content below the stated amount at the final test time.
L_3	12	The average value of the 24 units ($L_1 + L_2 + L_3$) lies within each of the stated ranges, and is not less than the stated amount at the final test time; not more than 2 of the 24 units are more than 10 per cent of labelled content outside each of the stated ranges; not more than 2 of the 24 units are more than 10 per cent of labelled content below the stated amount at the final test time; and none of the units is more than 20 per cent of labelled content outside each of the stated ranges or more than 20 per cent of labelled content below the stated amount at the final test time.

Delayed-release dosage forms

Acid stage. Unless otherwise specified, the requirements of this portion of the test are met if the quantities, based on the percentage of the labelled content of active substance dissolved from the units tested conform to Table 2.9.3.-3. Continue testing through the 3 levels unless the results of both acid and buffer stages conform at an earlier level.

Table 2.9.3.-3

Level	Number tested	Acceptance criteria
A_1	6	No individual value exceeds 10 per cent dissolved.
A_2	6	The average value of the 12 units ($A_1 + A_2$) is not more than 10 per cent dissolved, and no individual unit is greater than 25 per cent dissolved.
A_3	12	The average value of the 24 units ($A_1 + A_2 + A_3$) is not more than 10 per cent dissolved, and no individual unit is greater than 25 per cent dissolved.

Buffer stage. Unless otherwise specified, the requirements are met if the quantities of active substance dissolved from the units tested conform to Table 2.9.3.-4. Continue testing through the 3 levels unless the results of both stages conform at an earlier level. The value of *Q* in Table 2.9.3.-4 is 75 per cent dissolved unless otherwise specified. The quantity, *Q*, is the specified total amount of active substance dissolved in both the acid and buffer stages, expressed as a percentage of the labelled content. The 5 per cent, 15 per cent and 25 per cent values in the Table are percentages of the labelled content so that these values and *Q* are in the same terms.

Table 2.9.3.-4

Level	Number tested	Acceptance criteria
B_1	6	No unit is less than $Q + 5$ per cent.
B_2	6	The average value of the 12 units ($B_1 + B_2$) is equal to or greater than *Q*, and no unit is less than $Q - 15$ per cent.
B_3	12	The average value of the 24 units ($B_1 + B_2 + B_3$) is equal to or greater than *Q*, not more than 2 units are less than $Q - 15$ per cent, and no unit is less than $Q - 25$ per cent.

Recommendations on dissolution testing are given in general chapter 5.17.1.

01/2008:20904

2.9.4. DISSOLUTION TEST FOR TRANSDERMAL PATCHES

This test is used to determine the dissolution rate of the active ingredients of transdermal patches.

1. DISK ASSEMBLY METHOD

Equipment. Use the paddle and vessel assembly from the paddle apparatus described in the dissolution test for solid oral dosage forms (*2.9.3*) with the addition of a stainless steel disk assembly (SSDA) in the form of a net with an aperture of 125 µm (see Figure 2.9.4.-1).

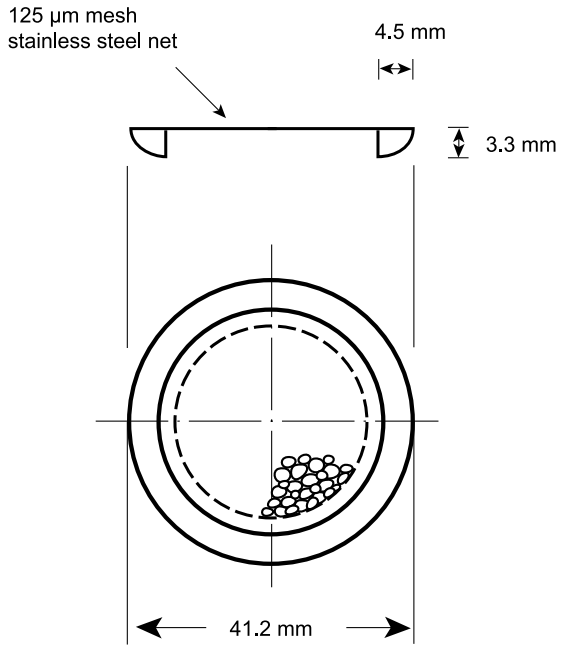

Figure 2.9.4.-1. – *Disk assembly*

The SSDA holds the system at the bottom of the vessel and is designed to minimise any dead volume between the SSDA and the bottom of the vessel. The SSDA holds the patch flat, with the release surface uppermost and parallel to the bottom of the paddle blade. A distance of 25 ± 2 mm between the bottom of the paddle blade and the surface of the SSDA is maintained during the test (see Figure 2.9.4.-2). The temperature is maintained at 32 ± 0.5 °C. The vessel may be covered during the test to minimise evaporation.

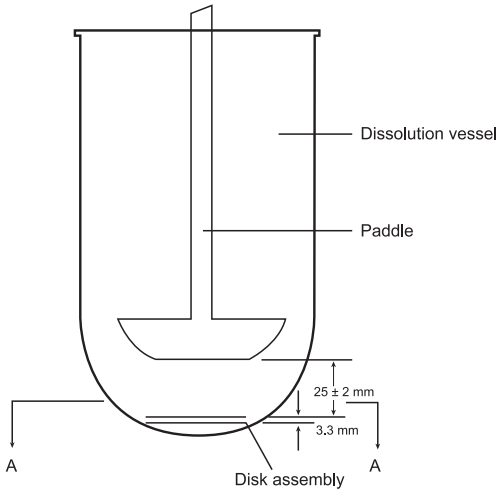

Figure 2.9.4.-2. – *Paddle and disk*

Procedure. Place the prescribed volume of the dissolution medium in the vessel and equilibrate the medium to the prescribed temperature. Apply the patch to the SSDA, ensuring that the release surface of the patch is as flat as possible. The patch may be attached to the SSDA by a prescribed adhesive or by a strip of a double-sided adhesive tape. The adhesive or tape are previously tested for the absence of interference with the assay and of adsorption of the active ingredient(s). Press the patch, release surface facing up, onto the side of the SSDA made adhesive. The applied patch must

not overlap the borders of the SSDA. For this purpose and provided that the preparation is homogeneous and uniformly spread on the outer covering, an appropriate and exactly measured piece of the patch may be cut and used for testing the dissolution rate. This procedure may also be necessary to achieve appropriate sink conditions. This procedure must not be applied to membrane-type patches. Place the patch mounted on the SSDA flat at the bottom of the vessel with the release surface facing upwards. Immediately rotate the paddle at 100 r/min, for example. At predetermined intervals, withdraw a sample from the zone midway between the surface of the dissolution medium and the top of the blade, not less than 1 cm from the vessel wall.

Perform the assay on each sample, correcting for any volume losses, as necessary. Repeat the test with additional patches.

2. CELL METHOD

Equipment. Use the paddle and vessel assembly from the paddle apparatus described in the dissolution test for solid oral dosage forms (*2.9.3*) with the addition of the extraction cell (*cell*).

The *cell* is made of chemically inert materials and consists of a *support*, a *cover* and, if necessary, a *membrane* placed on the patch to isolate it from the medium that may modify or adversely affect the physico-chemical properties of the patch (see Figure 2.9.4.-3).

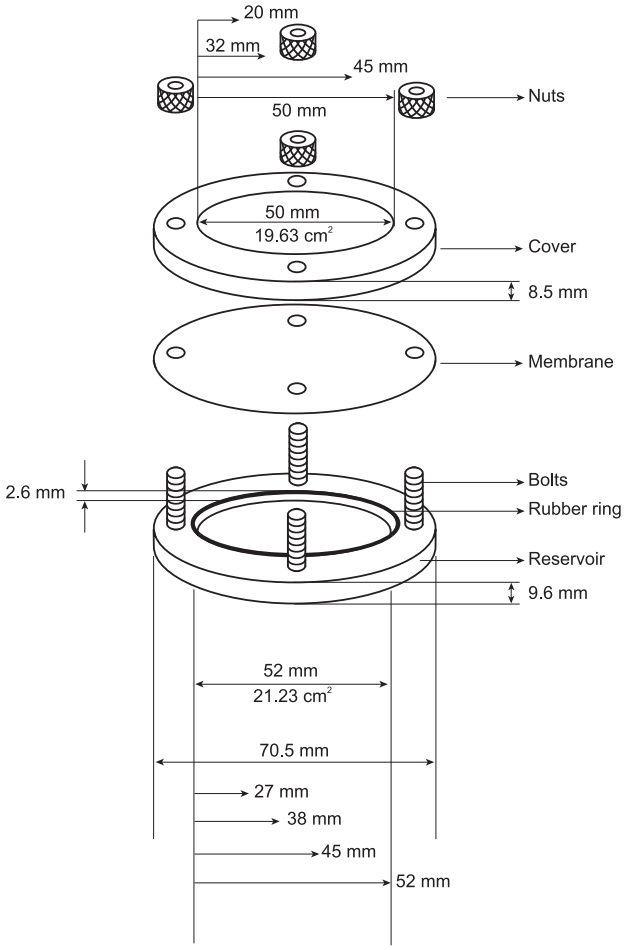

Figure 2.9.4.-3. – *Extraction cell*

Support. The central part of the support forms a cavity intended to hold the patch. The cavity has a depth of 2.6 mm and a diameter that is appropriate to the size of the patch to be examined. The following diameters can be used: 27 mm, 38 mm, 45 mm, 52 mm, corresponding to volumes of 1.48 mL, 2.94 mL, 4.13 mL, 5.52 mL, respectively.

Cover. The cover has a central opening with a diameter selected according to the size of the patch to be examined. The patch can thus be precisely centred, and its releasing surface limited. The following diameters may be used: 20 mm, 32 mm, 40 mm, 50 mm corresponding to areas of 3.14 cm^2, 8.03 cm^2, 12.56 cm^2, 19.63 cm^2, respectively. The cover is held in place by nuts screwed onto bolts projecting from the support. The cover is sealed to the support by a rubber ring set on the reservoir.

Extraction cell. The *cell* holds the patch flat, with the release surface uppermost and parallel to the bottom of the paddle blade. A distance of 25 ± 2 mm is maintained between the paddle blade and the surface of the patch (see Figure 2.9.4.-4). The temperature is maintained at 32 ± 0.5 °C. The vessel may be covered during the test to minimise evaporation.

Procedure. Place the prescribed volume of the dissolution medium in the vessel and equilibrate the medium to the prescribed temperature. Precisely centre the patch in the *cell* with the releasing surface uppermost. Close the *cell*, if necessary applying a hydrophobic substance (for example, petrolatum) to the flat surfaces to ensure the seal, and ensure that the patch stays in place. Introduce the cell flat into the bottom of the vessel with the cover facing upwards. Immediately rotate the paddle, at 100 r/min for example. At predetermined intervals, withdraw a sample from the zone midway between the surface of the dissolution medium and the top of the paddle blade, not less than 1 cm from the vessel wall.

Perform the assay on each sample, correcting for any volume losses, as necessary. Repeat the test with additional patches.

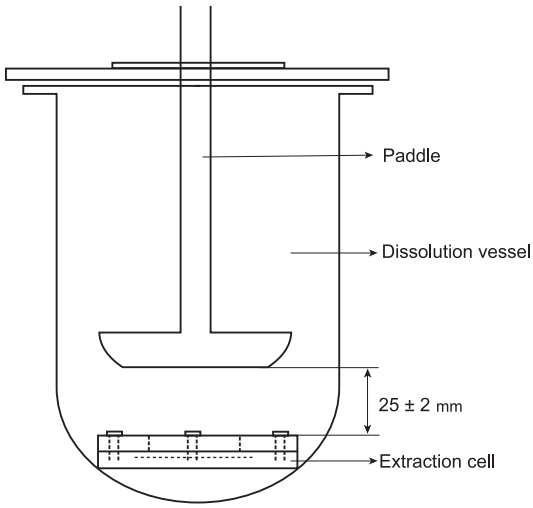

Figure 2.9.4.-4. – *Paddle over extraction cell*

3. ROTATING CYLINDER METHOD

Equipment. Use the assembly of the paddle apparatus described in the dissolution test for solid oral dosage forms (*2.9.3*). Replace the paddle and shaft with a stainless steel cylinder stirring element (*cylinder*) (see Figure 2.9.4.-5). The patch is placed on the *cylinder* at the beginning of each test. The distance between the inside bottom of the vessel and the *cylinder* is maintained at 25 ± 2 mm during the test. The temperature is maintained at 32 ± 0.5 °C. The vessel is covered during the test to minimise evaporation.

Procedure. Place the prescribed volume of the dissolution medium in the vessel and equilibrate the medium to the prescribed temperature. Remove the protective liner from the patch and place the adhesive side on a piece of suitable inert porous membrane that is at least 1 cm larger on all

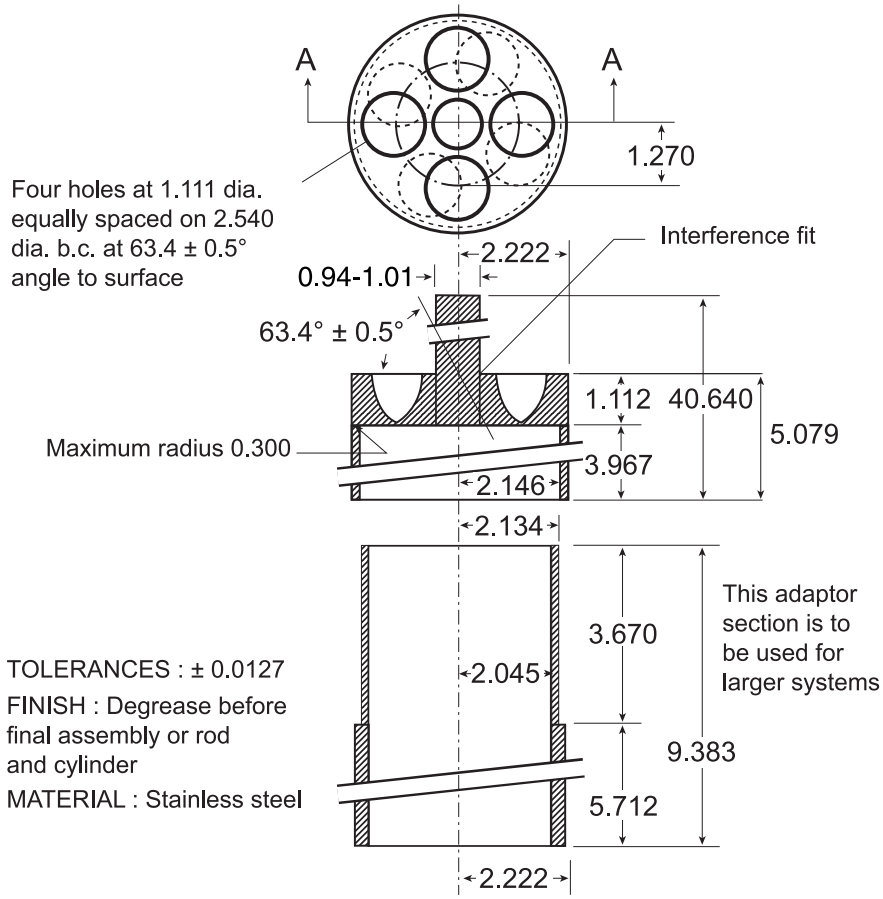

Figure 2.9.4.-5. – *Cylinder stirring element*

Dimensions in centimetres

sides than the patch. Place the patch on a clean surface with the membrane in contact with this surface. Two systems for adhesion to the *cylinder* may be used:

- apply a suitable adhesive to the exposed membrane borders and, if necessary, to the back of the patch,
- apply a double-sided adhesive tape to the external wall of the *cylinder*.

Using gentle pressure, carefully apply the non-adhesive side of the patch to the *cylinder*, so that the release surface is in contact with the dissolution medium and the long axis of the patch fits around the circumference of the *cylinder*.

The system for adhesion used is previously tested for absence of interference with the assay and of adsorption of the active ingredient(s).

Place the *cylinder* in the apparatus, and immediately rotate the *cylinder* at 100 r/min, for example. At determined intervals, withdraw a sample of dissolution medium from a zone midway between the surface of the dissolution medium and the top of the rotating *cylinder*, and not less than 1 cm from the vessel wall.

Perform the assay on each sample as directed in the individual monograph, correcting for any volume withdrawn, as necessary. Repeat the test with additional patches.

Interpretation. The requirements are met if the quantity of active ingredient(s) released from the patch, expressed as the amount per surface area per time unit, is within the prescribed limits at the defined sampling times.

01/2008:20905

2.9.5. UNIFORMITY OF MASS OF SINGLE-DOSE PREPARATIONS

Weigh individually 20 units taken at random or, for single-dose preparations presented in individual containers, the contents of 20 units, and determine the average mass. Not more than 2 of the individual masses deviate from the average mass by more than the percentage deviation shown in Table 2.9.5.-1 and none deviates by more than twice that percentage.

For capsules and powders for parenteral administration, proceed as described below.

CAPSULES

Weigh an intact capsule. Open the capsule without losing any part of the shell and remove the contents as completely as possible. For soft shell capsules, wash the shell with a suitable solvent and allow to stand until the odour of the solvent is no longer perceptible. Weigh the shell. The mass of the contents is the difference between the weighings. Repeat the procedure with another 19 capsules.

Table 2.9.5.-1

Pharmaceutical Form	Average Mass	Percentage deviation
Tablets (uncoated and film-coated)	80 mg or less	10
	More than 80 mg and less than 250 mg	7.5
	250 mg or more	5
Capsules, granules (uncoated, single-dose) and powders (single-dose)	Less than 300 mg	10
	300 mg or more	7.5
Powders for parenteral administration* (single-dose)	More than 40 mg	10
Suppositories and pessaries	All masses	5
Powders for eye-drops and powders for eye lotions (single-dose)	Less than 300 mg	10
	300 mg or more	7.5

* When the average mass is equal to or below 40 mg, the preparation is not submitted to the test for uniformity of mass but to the test for uniformity of content of single-dose preparations (*2.9.6*).

POWDERS FOR PARENTERAL ADMINISTRATION

Remove any paper labels from a container and wash and dry the outside. Open the container and without delay weigh the container and its contents. Empty the container as completely as possible by gentle tapping, rinse it if necessary with *water R* and then with *alcohol R* and dry at 100-105 °C for 1 h, or, if the nature of the container precludes heating at this temperature, dry at a lower temperature to constant mass. Allow to cool in a desiccator and weigh. The mass of the contents is the difference between the weighings. Repeat the procedure with another 19 containers.

01/2008:20906

2.9.6. UNIFORMITY OF CONTENT OF SINGLE-DOSE PREPARATIONS

The test for uniformity of content of single-dose preparations is based on the assay of the individual contents of active substance(s) of a number of single-dose units to determine whether the individual contents are within limits set with reference to the average content of the sample.

The test is not required for multivitamin and trace-element preparations and in other justified and authorised circumstances.

Method. Using a suitable analytical method, determine the individual contents of active substance(s) of 10 dosage units taken at random.

Apply the criteria of test A, test B or test C as specified in the monograph for the dosage form in question.

TEST A

Tablets, powders for parenteral administration, ophthalmic inserts, suspensions for injection. The preparation complies with the test if each individual content is between 85 per cent and 115 per cent of the average content. The preparation fails to comply with the test if more than one individual content is outside these limits or if one individual content is outside the limits of 75 per cent to 125 per cent of the average content.

If one individual content is outside the limits of 85 per cent to 115 per cent but within the limits of 75 per cent to 125 per cent, determine the individual contents of another 20 dosage units taken at random. The preparation complies with the test if not more than one of the individual contents of the 30 units is outside 85 per cent to 115 per cent of the average content and none is outside the limits of 75 per cent to 125 per cent of the average content.

TEST B

Capsules, powders other than for parenteral administration, granules, suppositories, pessaries. The preparation complies with the test if not more than one individual content is outside the limits of 85 per cent to 115 per cent of the average content and none is outside the limits of 75 per cent to 125 per cent of the average content. The preparation fails to comply with the test if more than 3 individual contents are outside the limits of 85 per cent to 115 per cent of the average content or if one or more individual contents are outside the limits of 75 per cent to 125 per cent of the average content.

If 2 or 3 individual contents are outside the limits of 85 per cent to 115 per cent but within the limits of 75 per cent to 125 per cent, determine the individual contents of another 20 dosage units taken at random. The preparation complies with the test if not more than 3 individual contents of the 30 units are outside the limits of 85 per cent to 115 per cent of the average content and none is outside the limits of 75 per cent to 125 per cent of the average content.

TEST C

Transdermal patches. The preparation complies with the test if the average content of the 10 dosage units is between 90 per cent and 110 per cent of the content stated on the label and if the individual content of each dosage unit is between 75 per cent and 125 per cent of the average content.

01/2010:20907

2.9.7. FRIABILITY OF UNCOATED TABLETS[(6)]

This chapter provides guidelines for the friability determination of compressed, uncoated tablets. The test procedure presented in this chapter is generally applicable to most compressed tablets. Measurement of tablet friability supplements other physical strength measurements, such as tablet breaking force.

Use a drum, with an internal diameter between 283-291 mm and a depth between 36-40 mm, of transparent synthetic polymer with polished internal surfaces, and subject to minimum static build-up (see Figure 2.9.7.-1.). One side of the drum is removable. The tablets are tumbled at each turn of the drum by a curved projection with an inside radius between 75.5-85.5 mm that extends from the middle of the drum to the outer wall. The outer diameter of the central ring is between 24.5-25.5 mm. The drum is attached to the horizontal axis of a device that rotates at 25 ± 1 r/min. Thus, at each turn the tablets roll or slide and fall onto the drum wall or onto each other.

For tablets with a unit mass equal to or less than 650 mg, take a sample of whole tablets corresponding as near as possible to 6.5 g. For tablets with a unit mass of more than 650 mg, take a sample of 10 whole tablets. The tablets are carefully dedusted prior to testing. Accurately weigh the tablet sample, and place the tablets in the drum. Rotate the drum 100 times, and remove the tablets. Remove any loose dust from the tablets as before, and accurately weigh.

Generally, the test is run once. If obviously cracked, cleaved, or broken tablets are present in the tablet sample after tumbling, the sample fails the test. If the results are difficult to interpret or if the weight loss is greater than the targeted value, the test is repeated twice and the mean of the 3 tests determined. A maximum loss of mass (obtained from a single test or from the mean of 3 tests) not greater than 1.0 per cent is considered acceptable for most products.

If tablet size or shape causes irregular tumbling, adjust the drum base so that the base forms an angle of about 10° with the horizontal and the tablets no longer bind together when lying next to each other, which prevents them from falling freely.

(6) This chapter has undergone pharmacopoeial harmonisation. See chapter *5.8. Pharmacopoeial harmonisation.*

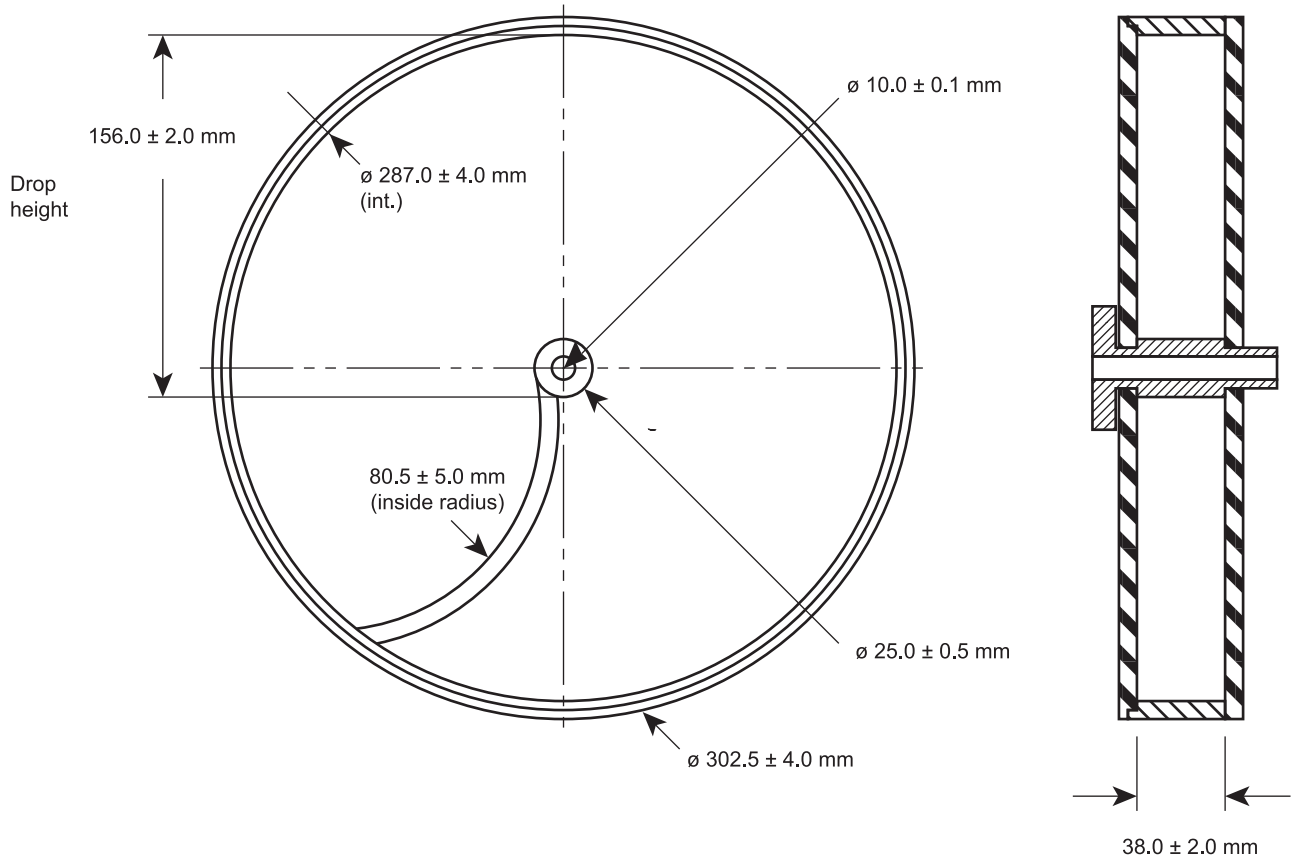

Figure 2.9.7.-1. – *Tablet friability apparatus*

Effervescent tablets and chewable tablets may have different specifications as far as friability is concerned. In the case of hygroscopic tablets, a humidity-controlled environment is required for testing.

A drum with dual scooping projections, or apparatus with more than one drum, for the running of multiple samples at one time, are also permitted.

01/2008:20908

2.9.8. RESISTANCE TO CRUSHING OF TABLETS

This test is intended to determine, under defined conditions, the resistance to crushing of tablets, measured by the force needed to disrupt them by crushing.

APPARATUS

The apparatus consists of 2 jaws facing each other, one of which moves towards the other. The flat surfaces of the jaws are perpendicular to the direction of movement. The crushing surfaces of the jaws are flat and larger than the zone of contact with the tablet. The apparatus is calibrated using a system with a precision of 1 newton.

OPERATING PROCEDURE

Place the tablet between the jaws, taking into account, where applicable, the shape, the break-mark and the inscription; for each measurement orient the tablet in the same way with respect to the direction of application of the force. Carry out the measurement on 10 tablets, taking care that all fragments of tablets have been removed before each determination.

This procedure does not apply when fully automated equipment is used.

EXPRESSION OF RESULTS

Express the results as the mean, minimum and maximum values of the forces measured, all expressed in newtons.

Indicate the type of apparatus and, where applicable, the orientation of the tablets.

07/2008:20909

2.9.9. MEASUREMENT OF CONSISTENCY BY PENETROMETRY

This test is intended to measure, under determined and validated conditions, the penetration of an object into the product to be examined in a container with a specified shape and size.

APPARATUS

The apparatus consists of a penetrometer made up of a stand and a penetrating object. A suitable apparatus is shown in Figure 2.9.9.-1.

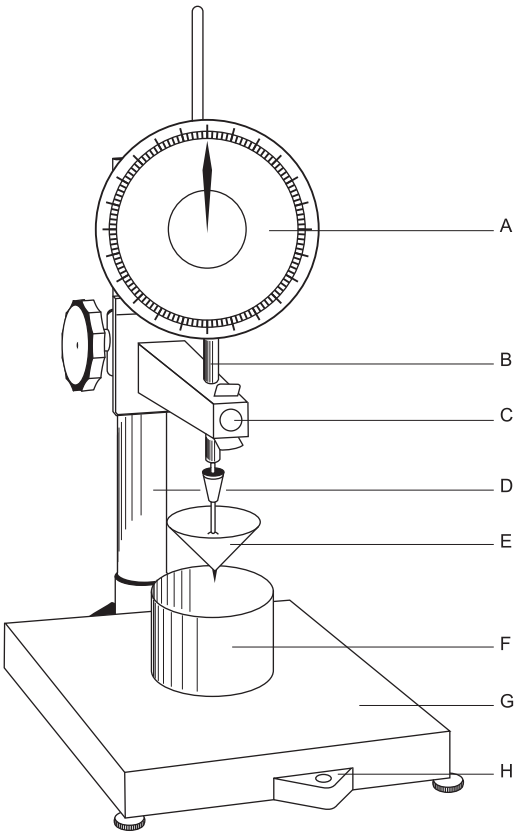

Figure 2.9.9.-1. – *Penetrometer*

A. Scale showing the depth of penetration, graduated in tenths of millimetres.
B. Vertical shaft to maintain and guide the penetrating object.
C. Device to retain and to release the penetrating object automatically and for a constant time.
D. Device to ensure that the penetrating object is vertical and that the base is horizontal.
E. Penetrating object (see Figures 2.9.9.-2 and 3).
F. Container.
G. Horizontal base.
H. Control for the horizontal base.

The stand is made up of:

- a vertical shaft to maintain and guide the penetrating object;
- a horizontal base;
- a device to ensure that the penetrating object is vertical;
- a device to check that the base is horizontal;
- a device to retain and release the penetrating object;
- a scale showing the depth of penetration, graduated in tenths of a millimetre.

The penetrating object, made of a suitable material, has a smooth surface, and is characterised by its shape, size and mass (*m*).

Suitable penetrating objects are shown in Figures 2.9.9.-2 and 2.9.9.-3.

PROCEDURE

Prepare the test samples according to one of the following procedures.

A. Carefully and completely fill 3 containers, without forming air bubbles. Level if necessary to obtain a flat surface. Store the samples at 25 ± 0.5 °C for 24 h, unless otherwise prescribed.

B. Store 3 samples at 25 ± 0.5 °C for 24 h, unless otherwise prescribed. Apply a suitable shear to the samples for 5 min. Carefully and completely fill 3 containers, without forming air bubbles, and level if necessary to obtain a flat surface.

C. Melt 3 samples and carefully and completely fill 3 containers, without forming air bubbles. Store the samples at 25 ± 0.5 °C for 24 h, unless otherwise prescribed.

Determination of penetration. Place the test sample on the base of the penetrometer. Verify that its surface is perpendicular to the vertical axis of the penetrating object. Bring the temperature of the penetrating object to 25 ± 0.5 °C and then adjust its position such that its tip just touches the surface of the sample. Release the penetrating object and hold it free for 5 s. Clamp the penetrating object and measure the depth of penetration. Repeat the test with the 2 remaining containers.

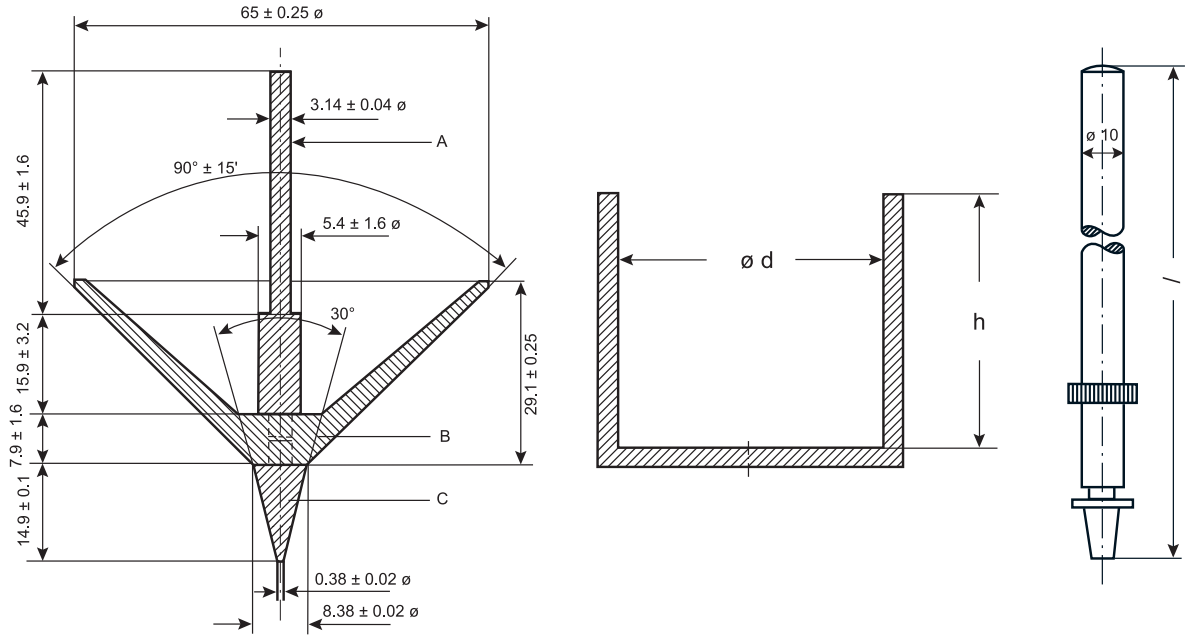

Figure 2.9.9.-2. – *Cone (m = 102.5 ± 0.05 g), suitable container (d = 102 mm or 75 mm; h ≥ 62 mm) and shaft (l = 162 mm; m = 47.5 ± 0.05 g).*
Dimensions in millimetres

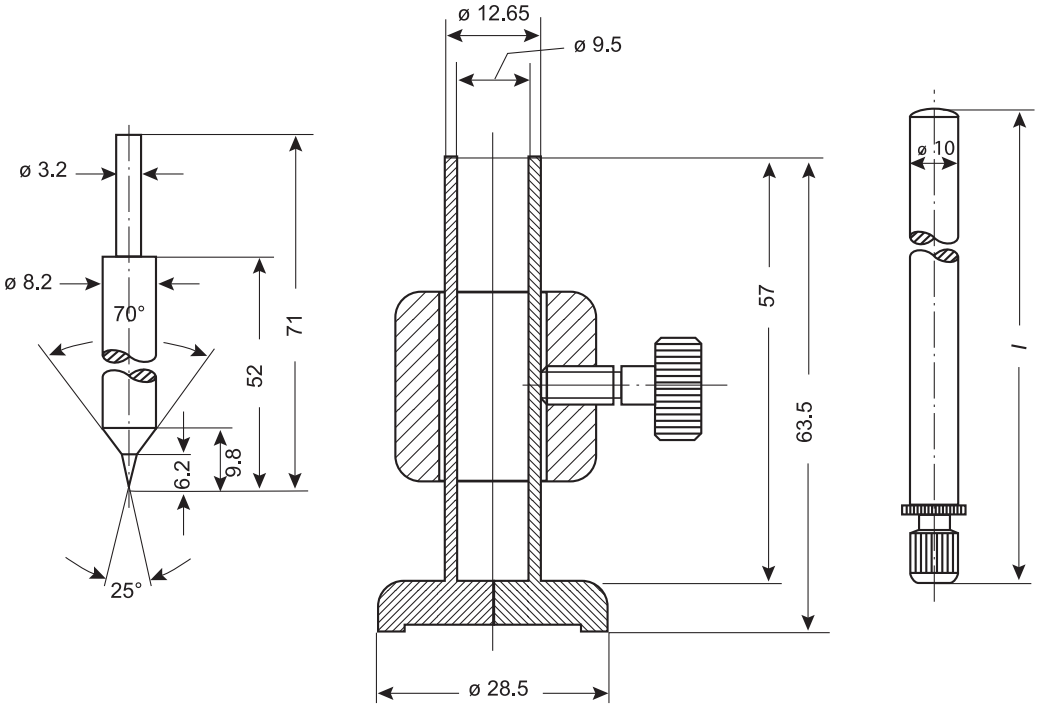

Figure 2.9.9.-3 – *Micro-cone (m = 7.0 g), suitable container and shaft (l = 116 mm; m = 16.8 g)*
Dimensions in millimetres

EXPRESSION OF THE RESULTS

The penetration is expressed in tenths of a millimetre as the arithmetic mean of the 3 measurements. If any of the individual results differ from the mean by more than 3 per cent, repeat the test and express the results of the 6 measurements as the mean and the relative standard deviation.

04/2013:20910

2.9.10. ETHANOL CONTENT

These methods are intended for the examination of liquid pharmaceutical preparations and their ingredients that contain ethanol. The ethanol content of a liquid is expressed as the number of volumes of ethanol contained in 100 volumes of the liquid, the volumes being measured at 20 ± 0.1 °C. This is known as the 'percentage of ethanol by volume' (per cent *V/V*). The content may also be expressed in grams of ethanol per 100 g of the liquid. This is known as the 'percentage of ethanol by mass' (per cent *m/m*).

METHOD A

Where preparations contain dissolved substances, the dissolved substances must be separated from the ethanol that is to be determined by distillation. Where distillation would distil volatile substances other than ethanol and water, the appropriate precautions are stated in the monograph.

The relation between the density at 20 ± 0.1 °C, the relative density (corrected to vacuum) and the ethanol content of a mixture of water and ethanol is given in the tables of the International Organisation for Legal Metrology (1972), International Recommendation No. 22.

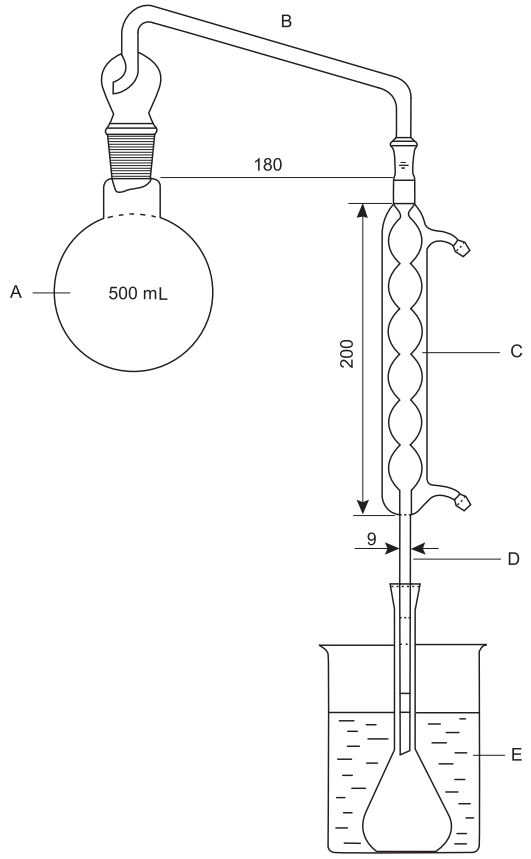

Figure 2.9.10.-1. – *Apparatus for the determination of ethanol content*
Dimensions in millimetres

Apparatus. The apparatus (see Figure 2.9.10.-1) consists of a round-bottomed flask (*A*) fitted with a distillation head (*B*) with a steam trap and attached to a vertical condenser (*C*). The latter is fitted at its lower part with a tube (*D*), which carries the distillate into the lower part of a 100 mL or 250 mL volumetric flask. The volumetric flask is immersed in a mixture of ice

and water (*E*) during the distillation. A disc having a circular aperture 6 cm in diameter is placed under the flask (*A*) to reduce the risk of charring of any dissolved substances.

Method

Pycnometer method/oscillating transducer density meter method. Transfer 25.0 mL of the preparation to be examined, measured at 20 ± 0.1 °C, to the distillation flask. Dilute with 100-150 mL of *distilled water R* and add a few pieces of pumice. Attach the distillation head and condenser. Distil and collect not less than 90 mL of distillate in a 100 mL volumetric flask. Adjust the temperature to 20 ± 0.1 °C and dilute to 100.0 mL with *distilled water R* at 20 ± 0.1 °C. Determine the relative density at 20 ± 0.1 °C using a pycnometer or an oscillating transducer density meter.

The values indicated in Table 2.9.10.-1, column 3, are multiplied by 4 to obtain the percentage of ethanol by volume (*V/V*) contained in the preparation. After calculation of the ethanol content using the table, round off the result to 1 decimal place.

Table 2.9.10.-1. – *Relationship between density, relative density and ethanol content*

ρ_{20} (kg·m^{-3})	Relative density of the distillate measured in air d_{20}^{20}	Ethanol content in per cent *V/V* at 20 °C
968.0	0.9697	25.09
968.5	0.9702	24.64
969.0	0.9707	24.19
969.5	0.9712	23.74
970.0	0.9717	23.29
970.5	0.9722	22.83
971.0	0.9727	22.37
971.5	0.9733	21.91
972.0	0.9738	21.45
972.5	0.9743	20.98
973.0	0.9748	20.52
973.5	0.9753	20.05
974.0	0.9758	19.59
974.5	0.9763	19.12
975.0	0.9768	18.66
975.5	0.9773	18.19
976.0	0.9778	17.73
976.5	0.9783	17.25
977.0	0.9788	16.80
977.5	0.9793	16.34
978.0	0.9798	15.88
978.5	0.9803	15.43
979.0	0.9808	14.97
979.5	0.9813	14.52
980.0	0.9818	14.07
980.5	0.9823	13.63
981.0	0.9828	13.18
981.5	0.9833	12.74
982.0	0.9838	12.31
982.5	0.9843	11.87
983.0	0.9848	11.44
983.5	0.9853	11.02
984.0	0.9858	10.60
984.5	0.9863	10.18
985.0	0.9868	9.76
985.5	0.9873	9.35
986.0	0.9878	8.94
986.5	0.9883	8.53
987.0	0.9888	8.13
987.5	0.9893	7.73
988.0	0.9898	7.34
988.5	0.9903	6.95
989.0	0.9908	6.56
989.5	0.9913	6.17
990.0	0.9918	5.79
990.5	0.9923	5.42
991.0	0.9928	5.04
991.5	0.9933	4.67
992.0	0.9938	4.30
992.5	0.9943	3.94
993.0	0.9948	3.58
993.5	0.9953	3.22
994.0	0.9958	2.86
994.5	0.9963	2.51
995.0	0.9968	2.16
995.5	0.9973	1.82
996.0	0.9978	1.47
996.5	0.9983	1.13
997.0	0.9988	0.80
997.5	0.9993	0.46
998.0	0.9998	0.13

Hydrometer method. Transfer 50.0 mL of the preparation to be examined, measured at 20 ± 0.1 °C, to the distillation flask, add 200-300 mL of *distilled water R* and distil, as described above, into a volumetric flask until at least 180 mL has been collected. Adjust the temperature to 20 ± 0.1 °C and dilute to 250.0 mL with *distilled water R* at 20 ± 0.1 °C.

Transfer the distillate to a cylinder whose diameter is at least 6 mm wider than the bulb of the hydrometer. If the volume is insufficient, double the quantity of the sample and dilute the distillate to 500.0 mL with *distilled water R* at 20 ± 0.1 °C.

Multiply the strength by 5 to allow for the dilution during the determination. After calculation of the ethanol content using Table 2.9.10.-1, round off the result to 1 decimal place.

METHOD B

Head-space gas chromatography (*2.2.28*).

Internal standard solution. Dilute 1.0 mL of *propanol R1* to 100.0 mL with *water R*. Dilute 1.0 mL of the solution to 20.0 mL with *water R*.

Test solution. Dilute a volume of the preparation to be examined corresponding to 1 g of ethanol to 50.0 mL with *water R*. Dilute 1.0 mL of the solution to 20.0 mL with *water R*. To 2.0 mL of this solution add 1.0 mL of the internal standard solution and dilute to 20.0 mL with *water R*.

Reference solution (a). Dilute 5.0 mL of *anhydrous ethanol R* to 100.0 mL with *water R*. Dilute 25.0 mL of the solution to 100.0 mL with *water R*. Dilute 1.0 mL of this solution to 20.0 mL with *water R*.

Reference solution (b). Mix 0.5 mL of reference solution (a) and 1.0 mL of the internal standard solution and dilute to 20.0 mL with *water R*.

Reference solution (c). Mix 1.0 mL of reference solution (a) and 1.0 mL of the internal standard solution and dilute to 20.0 mL with *water R*.

Reference solution (d). Mix 1.5 mL of reference solution (a) and 1.0 mL of the internal standard solution and dilute to 20.0 mL with *water R*.

Reference solution (e). Dilute 1.0 mL of *methanol R2* to 100.0 mL with *water R*. Dilute 1.0 mL of the solution to 20.0 mL with *water R*.

Reference solution (f). Mix 1.0 mL of the internal standard solution, 2.0 mL of reference solution (a) and 2.0 mL of reference solution (e) and dilute to 20.0 mL with *water R*.

Column:

- *material*: fused silica;
- *size*: *l* = 30 m, Ø = 0.53 mm;
- *stationary phase*: *poly[(cyanopropyl)(phenyl)][dimethyl]siloxane R* (film thickness 3 µm).

Carrier gas: *helium for chromatography R*.

Flow rate: 3 mL/min.

Split ratio: 1:50.

Static head-space conditions that may be used:

- *equilibration temperature*: 85 °C;
- *equilibration time*: 20 min.

Temperature:

	Time (min)	Temperature (°C)
Column	0 - 1.6	40
	1.6 - 9.9	40 → 65
	9.9 - 13.6	65 → 175
	13.6 - 20	175
Injection port		200
Detector		200

Detection: flame ionisation.

Injection: 1.0 mL of the gaseous phase of the test solution and reference solutions (b), (c), (d) and (f), at least 3 times.

Elution order: methanol, ethanol, 1-propanol.

Relative retention with reference to ethanol (retention time = about 5.3 min): methanol = about 0.8; 1-propanol = about 1.6.

System suitability: reference solution (f):

- *resolution*: minimum 5 between the peaks due to methanol and ethanol.

Establish a calibration curve with the concentration of ethanol in reference solutions (b), (c), (d) and (f) as the abscissa and the mean ratio of the peak area of ethanol to the peak area of the internal standard in the corresponding chromatograms as the ordinate.

Calculate the percentage content of ethanol in the preparation to be examined.

METHOD C

Gas chromatography (*2.2.28*).

Internal standard solution. Dilute 1.0 mL of *propanol R1* to 100.0 mL with *water R*.

Test solution. Dilute a volume of the preparation to be examined corresponding to 1 g of ethanol to 50.0 mL with *water R*. To 1.0 mL of this solution add 1.0 mL of the internal standard solution and dilute to 20.0 mL with *water R*.

Reference solution (a). Dilute 1.0 mL of *anhydrous ethanol R* to 50.0 mL with *water R*.

Reference solution (b). Dilute 1.0 mL of *methanol R2* to 100.0 mL with *water R*. Dilute 1.0 mL of the solution to 20.0 mL with *water R*.

Reference solution (c). Mix 1.0 mL of the internal standard solution, 1.0 mL of reference solution (a) and 2.0 mL of reference solution (b) and dilute to 20.0 mL with *water R*.

Column:

- *material*: fused silica;
- *size*: *l* = 30 m, Ø = 0.53 mm;
- *stationary phase*: *poly[(cyanopropyl)(phenyl)][dimethyl]siloxane R* (film thickness 3 µm).

Carrier gas: *helium for chromatography R*.

Flow rate: 3 mL/min.

Split ratio: 1:50.

Temperature:

	Time (min)	Temperature (°C)
Column	0 - 1.6	40
	1.6 - 9.9	40 → 65
	9.9 - 13.6	65 → 175
	13.6 - 20	175
Injection port		200
Detector		200

Detection: flame ionisation.

Injection: 1.0 µL of the test solution and reference solution (c), at least 3 times.

Elution order: methanol, ethanol, 1-propanol.

Relative retention with reference to ethanol (retention time = about 5.3 min): methanol = about 0.8; 1-propanol = about 1.6.

System suitability: reference solution (c):

- *resolution*: minimum 5 between the peaks due to methanol and ethanol.

Calculate the ethanol content in per cent *V/V* using the following expression:

$$\frac{A_1 \times I_2 \times 100}{A_2 \times I_1 \times V_1}$$

A_1 = area of the peak due to ethanol in the chromatogram obtained with the test solution;

A_2 = area of the peak due to ethanol in the chromatogram obtained with reference solution (c);

I_1 = area of the peak due to the internal standard in the chromatogram obtained with the test solution;

I_2 = area of the peak due to the internal standard in the chromatogram obtained with reference solution (c);

V_1 = volume of the preparation to be examined in the test solution, in millilitres.

04/2013:20911

2.9.11. TEST FOR METHANOL AND 2-PROPANOL

METHOD A

Head-space gas chromatography (*2.2.28*).

Internal standard solution. Dilute 1.0 mL of *propanol R1* to 100.0 mL with *water R*. Dilute 1.0 mL of the solution to 20.0 mL with *water R*.

Test solution. Mix 1.0 mL of the internal standard solution and 4.0 mL of the preparation to be examined and dilute to 20.0 mL with *water R*.

Reference solution (a). Mix 1.0 mL of *methanol R2* and 1.0 mL of *2-propanol R2* and dilute to 100.0 mL with *water R*. Dilute 1.0 mL of the solution to 20.0 mL with *water R*.

Reference solution (b). Dilute 5.0 mL of *anhydrous ethanol R* to 100.0 mL with *water R*. Dilute 25.0 mL of the solution to 100.0 mL with *water R*. Dilute 1.0 mL of this solution to 20.0 mL with *water R*.

Reference solution (c). Mix 1.0 mL of the internal standard solution, 2.0 mL of reference solution (a) and 2.0 mL of reference solution (b) and dilute to 20.0 mL with *water R*.

Column:

- *material*: fused silica;
- *size*: *l* = 30 m, Ø = 0.53 mm;
- *stationary phase*: *poly[(cyanopropyl)(phenyl)][dimethyl]siloxane R* (film thickness 3 µm).

Carrier gas: *helium for chromatography R*.

Flow rate: 3 mL/min.

Split ratio: 1:50.

Static head-space conditions that may be used:

- *equilibration temperature*: 85 °C;
- *equilibration time*: 20 min.

Temperature:

	Time (min)	Temperature (°C)
Column	0 - 1.6	40
	1.6 - 9.9	40 → 65
	9.9 - 13.6	65 → 175
	13.6 - 20	175
Injection port		200
Detector		200

Detection: flame ionisation.

Injection: 1.0 mL of the gaseous phase of the test solution and reference solution (c), at least 3 times.

Elution order: methanol, ethanol, 2-propanol, 1-propanol.

Relative retention with reference to ethanol (retention time = about 5.3 min): methanol = about 0.8; 2-propanol = about 1.2; 1-propanol = about 1.6.

System suitability: reference solution (c):

- *resolution*: minimum 5 between the peaks due to methanol and ethanol.

Calculate the methanol content in per cent *V/V* using the following expression:

$$\frac{A_1 \times I_2}{A_2 \times I_1 \times 40}$$

A_1 = area of the peak due to methanol in the chromatogram obtained with the test solution;

A_2 = area of the peak due to methanol in the chromatogram obtained with reference solution (c);

I_1 = area of the peak due to the internal standard in the chromatogram obtained with the test solution;

I_2 = area of the peak due to the internal standard in the chromatogram obtained with reference solution (c).

Calculate the 2-propanol content in per cent *V/V* using the following expression:

$$\frac{A_3 \times I_2}{A_4 \times I_1 \times 40}$$

A_3 = area of the peak due to 2-propanol in the chromatogram obtained with the test solution;

A_4 = area of the peak due to 2-propanol in the chromatogram obtained with reference solution (c);

I_1 = area of the peak due to the internal standard in the chromatogram obtained with the test solution;

I_2 = area of the peak due to the internal standard in the chromatogram obtained with reference solution (c).

METHOD B

Gas chromatography (*2.2.28*).

Internal standard solution. Dilute 1.0 mL of *propanol R1* to 100.0 mL with *water R*.

Test solution. Mix 1.0 mL of the internal standard solution and 4.0 mL of the preparation to be examined and dilute to 20.0 mL with *water R*.

Reference solution (a). Mix 1.0 mL of *methanol R2* and 1.0 mL of *2-propanol R2* and dilute to 100.0 mL with *water R*. Dilute 1.0 mL of the solution to 20.0 mL with *water R*.

Reference solution (b). Dilute 1.0 mL of *anhydrous ethanol R* to 50.0 mL with *water R*.

Reference solution (c). Mix 1.0 mL of the internal standard solution, 1.0 mL of reference solution (b) and 2.0 mL of reference solution (a) and dilute to 20.0 mL with *water R*.

Column:

- *material*: fused silica;
- *size*: *l* = 30 m, Ø = 0.53 mm;
- *stationary phase*: *poly[(cyanopropyl)(phenyl)][dimethyl]siloxane R* (film thickness 3 µm).

Carrier gas: *helium for chromatography R*.

Flow rate: 3 mL/min.

Split ratio: 1:50.

Temperature:

	Time (min)	Temperature (°C)
Column	0 - 1.6	40
	1.6 - 9.9	40 → 65
	9.9 - 13.6	65 → 175
	13.6 - 20	175
Injection port		200
Detector		200

Detection: flame ionisation.

Injection: 1.0 µL of the test solution and reference solution (c), at least 3 times.

Elution order: methanol, ethanol, 2-propanol, 1-propanol.

Relative retention with reference to ethanol (retention time = about 5.3 min): methanol = about 0.8; 2-propanol = about 1.2; 1-propanol = about 1.6.

System suitability: reference solution (c):

– *resolution*: minimum 5 between the peaks due to methanol and ethanol.

Calculate the methanol content in per cent *V/V* using the following expression:

$$\frac{A_1 \times I_2}{A_2 \times I_1 \times 40}$$

A_1 = area of the peak due to methanol in the chromatogram obtained with the test solution;

A_2 = area of the peak due to methanol in the chromatogram obtained with reference solution (c);

I_1 = area of the peak due to the internal standard in the chromatogram obtained with the test solution;

I_2 = area of the peak due to the internal standard in the chromatogram obtained with reference solution (c).

Calculate the 2-propanol content in per cent *V/V* using the following expression:

$$\frac{A_3 \times I_2}{A_4 \times I_1 \times 40}$$

A_3 = area of the peak due to 2-propanol in the chromatogram obtained with the test solution;

A_4 = area of the peak due to 2-propanol in the chromatogram obtained with reference solution (c);

I_1 = area of the peak due to the internal standard in the chromatogram obtained with the test solution;

I_2 = area of the peak due to the internal standard in the chromatogram obtained with reference solution (c).

01/2008:20912

2.9.12. SIEVE TEST

The degree of fineness of a powder may be expressed by reference to sieves that comply with the specifications for non-analytical sieves (*2.1.4*).

Where the degree of fineness of powders is determined by sieving, it is defined in relation to the sieve number(s) used either by means of the following terms or, where such terms cannot be used, by expressing the fineness of the powder as a percentage *m/m* passing the sieve(s) used.

The following terms are used in the description of powders:

Coarse powder. Not less than 95 per cent by mass passes through a number 1400 sieve and not more than 40 per cent by mass passes through a number 355 sieve.

Moderately fine powder. Not less than 95 per cent by mass passes through a number 355 sieve and not more than 40 per cent by mass passes through a number 180 sieve.

Fine powder. Not less than 95 per cent by mass passes through a number 180 sieve and not more than 40 per cent by mass passes through a number 125 sieve.

Very fine powder. Not less than 95 per cent by mass passes through a number 125 sieve and not more than 40 per cent by mass passes through a number 90 sieve.

If a single sieve number is given, not less than 97 per cent of the powder passes through the sieve of that number, unless otherwise prescribed.

Assemble the sieves and operate in a suitable manner until sifting is practically complete. Weigh the separated fractions of the powder.

01/2008:20914

2.9.14. SPECIFIC SURFACE AREA BY AIR PERMEABILITY

The test is intended for the determination of the specific surface area of dry powders expressed in square metres per gram in the sub-sieve region. The effect of molecular flow ("slip flow") which may be important when testing powders consisting of particles less than a few micrometres is not taken into account in the equation used to calculate the specific surface area.

APPARATUS

The apparatus consists of the following parts:

(a) a *permeability cell* (see Figure 2.9.14.-1), which consists of a cylinder with an inner diameter of 12.6 ± 0.1 mm (*A*), constructed of glass or non-corroding metal. The bottom of the cell forms an airtight connection (for example, via an adapter) with the manometer (Figure 2.9.14.-2). A ledge 0.5 mm to 1 mm in width is located 50 ± 15 mm from the top of the cell. It is an integral part of the cell or firmly fixed so as to be airtight. It supports a perforated metal disk (*B*), constructed of non-corroding metal. The disk has a thickness of 0.9 ± 0.1 mm and is perforated with thirty to forty holes 1 mm in diameter evenly distributed over this area.

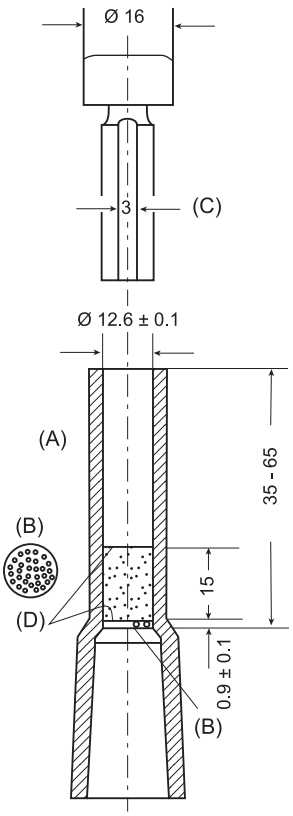

Figure 2.9.14.-1. – *Permeability cell*

Dimensions in millimetres

The plunger (*C*) is made of non-corroding metal and fits into the cell with a clearance of not more than 0.1 mm. The bottom of the plunger has sharp square edges at right angles to the principal axis. There is an air vent 3 mm long and 0.3 mm deep on one side of the plunger. The top of the plunger has a collar such that when the plunger is placed in the cell and the collar is brought into contact with the top of the cell, the distance between the bottom of the plunger and the top of the perforated disk (*B*) is 15 ± 1 mm.

The filter paper disks (*D*) have smooth edges and the same diameter as the inside of the cell.

(b) a *U-tube manometer* (*E*) (Figure 2.9.14.-2) is made of nominal 9 mm outer diameter and 7 mm inner diameter glass tubing with standard walls. The top of one arm of the manometer forms an airtight connection with the permeability cell (*F*). The manometer arm connected to the permeability cell has a line etched around the tube at 125 mm to 145 mm below the top of the side outlet and three other lines at distances of 15 mm, 70 mm and 110 mm above that line (*G*). The side outlet 250 mm to 305 mm above the bottom of the manometer is used to evacuate the manometer arm connected to the permeability cell. A tap is provided on the side outlet not more than 50 mm from the manometer arm.

The manometer is mounted firmly in such a manner that the arms are vertical. It is filled to the lowest mark with *dibutyl phthalate R* containing a lipophilic dye.

METHOD

If prescribed, dry the powder to be examined and sift through a suitable sieve (for example no. 125) to disperse agglomerates. Calculate the mass (*M*) of the powder to be used from the following expression:

$$M = V \times \rho \times (1 - \varepsilon) \qquad (1)$$

V = bulk volume of the compacted bed of powder,

ρ = density of the substance to be examined in grams per millilitre,

ε = porosity of the compacted bed of powder.

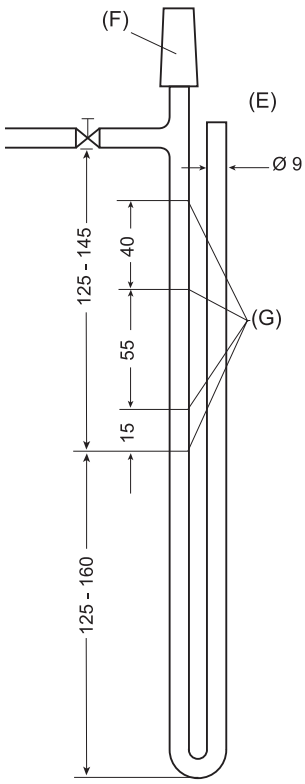

Figure 2.9.14.-2. – *Manometer*

Dimensions in millimetres

Assume first a porosity of 0.5 and introduce this value in Eq. 1 to calculate the mass (*M*) of the powder to be examined.

Place a filter paper disk on top of the perforated metal disk (*B*). Weigh the calculated mass (*M*) of the powder to be examined to the nearest 1 mg. Carefully transfer the powder into the cleaned, tared permeability cell and carefully tap the cell so that the surface of the powder bed is level and cover it with a second filter paper disk. Slowly compact the powder by means of the plunger, avoiding rotary movement. Maintain the pressure until the plunger is completely inserted into the permeability cell. If this is not possible, decrease the quantity of the powder used. If, on the contrary, there is not enough resistance, increase the quantity of the powder. In this case calculate the porosity again. After at least 10 s, remove the plunger.

Attach the permeability cell to the tube of the manometer by means of an airtight connection. Evacuate the air from the manometer by means of a rubber bulb until the level of the coloured liquid is at the highest mark. Close the tap and check that the apparatus is airtight by closing the upper end of the cell, for example with a rubber stopper. Remove the stopper and, using a timer, measure the time taken for the liquid to fall from the second to the third mark.

Using the measured flow time, calculate the specific surface area (*S*), expressed in square metres per gram, from the following expression:

$$S = \frac{K \times \sqrt{\varepsilon^3} \times \sqrt{t}}{\rho \times (1 - \varepsilon) \times \sqrt{\eta}} \qquad (2)$$

t = flow time in seconds,

η = dynamic viscosity of air in millipascal seconds (see Table 2.9.14.-1),

K = apparatus constant determined according to Equation (4),

ρ = density of the substance to be examined in grams per millilitre,

ε = porosity of the compacted bed of powder.

CALIBRATION OF THE APPARATUS

The bulk volume of the compacted bed of powder is determined by the mercury displacement method as follows:

Place two filter paper disks in the permeability cell, pressing down the edges with a rod slightly smaller than the cell diameter until the filter disks lie flat on the perforated metal disk; fill the cell with mercury, removing any air bubbles adhering to the wall of the cell and wipe away the excess to create a plane surface of mercury at the top of the cell. If the cell is made of material that will amalgamate, grease the cell and the metal disk first with a thin layer of liquid paraffin. Pour out the mercury into a tared beaker and determine the mass (M_A) and the temperature of the mercury.

Make a compacted bed using the reference powder and again fill the cell with mercury with a planar surface at the top of the cell. Pour out the mercury in a tared beaker and again determine the mass of the mercury (M_B). Calculate the bulk volume (V) of the compacted bed of powder from the following expression:

$$V = \frac{M_A - M_B}{\rho_{Hg}} \qquad (3)$$

$M_A - M_B$ = difference between the determined masses of mercury in grams,

ρ_{Hg} = density of mercury at the determined temperature in grams per millilitre.

Repeat the procedure twice, changing the powder each time; the range of values for the calculated volume (V) is not greater than 0.01 mL. Use the mean value of the three determined volumes for the calculations.

The apparatus constant *K* is determined using a reference powder with known specific surface area and density as follows:

Calculate the required quantity of the reference powder to be used (Eq. 1) using the stated density and the determined volume of the compacted powder bed (Eq. 3).

Homogenise and loosen up the powder by shaking it for 2 min in a 100 mL bottle. Prepare a compacted powder bed and measure the flow time of air as previously described. Calculate the apparatus constant (K) from the following expression:

$$K = \frac{S_{sp} \times \rho \times (1 - \varepsilon) \times \sqrt{\eta}}{\sqrt{\varepsilon^3} \times \sqrt{t}} \qquad (4)$$

S_{sp} = stated specific surface area of the reference powder,

ρ = density of the substance to be examined in grams per millilitre,

ε = porosity of the compacted bed of powder,

t = flow time in seconds,

η = dynamic viscosity of air in millipascal seconds (see Table 2.9.14.-1).

The density of mercury and the viscosity of air over a range of temperatures are shown in Table 2.9.14.-1.

Table 2.9.14.-1.

Temperature (°C)	Density of mercury (g/mL)	Viscosity of air (η) (mPa·s)	$\sqrt{\eta}$
16	13.56	0.01800	0.1342
17	13.56	0.01805	0.1344
18	13.55	0.01810	0.1345
19	13.55	0.01815	0.1347
20	13.55	0.01819	0.1349
21	13.54	0.01824	0.1351
22	13.54	0.01829	0.1353
23	13.54	0.01834	0.1354
24	13.54	0.01839	0.1356

01/2008:20916

2.9.16. FLOWABILITY

The test for flowability is intended to determine the ability of divided solids (for example, powders and granules) to flow vertically under defined conditions.

APPARATUS

According to the flow properties of the material to be tested, funnels with or without stem, with different angles and orifice diameters are used. Typical apparatuses are shown in Figures 2.9.16.-1 and 2.9.16.-2. The funnel is maintained upright by a suitable device. The assembly must be protected from vibrations.

METHOD

Into a dry funnel, whose bottom opening has been blocked by suitable means, introduce without compacting a test sample weighed with 0.5 per cent accuracy. The amount of the sample depends on the apparent volume and the apparatus used. Unblock the bottom opening of the funnel and measure the time needed for the entire sample to flow out of the funnel. Carry out three determinations.

EXPRESSION OF RESULTS

The flowability is expressed in seconds and tenths of seconds, related to 100 g of sample.

The results depend on the storage conditions of the material to be tested.

The results can be expressed as the following:

a) the mean of the determinations, if none of the individual values deviates from the mean value by more than 10 per cent;

b) as a range, if the individual values deviate from the mean value by more than 10 per cent;

c) as a plot of the mass against the flow time;

d) as an infinite time, if the entire sample fails to flow through.

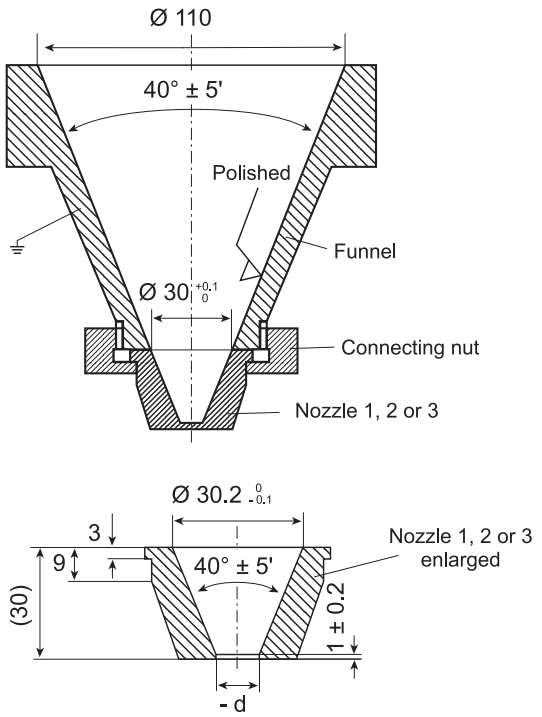

Nozzle	Diameter (*d*) of the outflow opening (millimetres)
1	10 ± 0.01
2	15 ± 0.01
3	25 ± 0.01

Figure 2.9.16.-1. – *Flow funnel and nozzle. Nozzle is made of stainless, acid-resistant steel (V4A,CrNi)*

Dimensions in millimetres

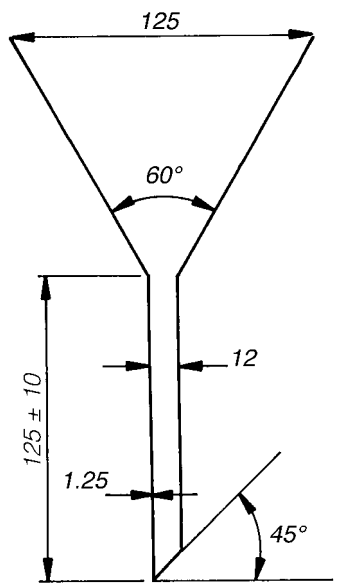

Figure 2.9.16.-2

Dimensions in millimetres

04/2010:20917

2.9.17. TEST FOR EXTRACTABLE VOLUME OF PARENTERAL PREPARATIONS[7]

Suspensions and emulsions are shaken before withdrawal of the contents and before the determination of the density. Oily and viscous preparations may be warmed according to the instructions on the label, if necessary, and thoroughly shaken immediately before removing the contents. The contents are then cooled to 20-25 °C before measuring the volume.

SINGLE-DOSE CONTAINERS

Select 1 container if the nominal volume is 10 mL or more, 3 containers if the nominal volume is more than 3 mL and less than 10 mL, or 5 containers if the nominal volume is 3 mL or less. Take up individually the total contents of each container selected into a dry syringe of a capacity not exceeding 3 times the volume to be measured, and fitted with a 21-gauge needle not less than 2.5 cm in length. Expel any air bubbles from the syringe and needle, then discharge the contents of the syringe without emptying the needle into a standardised dry cylinder (graduated to contain rather than to deliver the designated volumes) of such size that the volume to be measured occupies at least 40 per cent of its graduated volume. Alternatively, the volume of the contents in millilitres may be calculated as the mass in grams divided by the density.

For containers with a nominal volume of 2 mL or less, the contents of a sufficient number of containers may be pooled to obtain the volume required for the measurement provided that a separate, dry syringe assembly is used for each container. The contents of containers holding 10 mL or more may be determined by opening them and emptying the contents directly into the graduated cylinder or tared beaker.

The volume is not less than the nominal volume in case of containers examined individually, or, in case of containers with a nominal volume of 2 mL or less, is not less than the sum of the nominal volumes of the containers taken collectively.

MULTIDOSE CONTAINERS

For injections in multidose containers labelled to yield a specific number of doses of a stated volume, select one container and proceed as directed for single-dose containers using the same number of separate syringe assemblies as the number of doses specified.

The volume is such that each syringe delivers not less than the stated dose.

CARTRIDGES AND PREFILLED SYRINGES

Select 1 container if the nominal volume is 10 mL or more, 3 containers if the nominal volume is more than 3 mL and less than 10 mL, or 5 containers if the nominal volume is 3 mL or less. If necessary, fit the containers with the accessories required for their use (needle, piston, syringe) and transfer the entire contents of each container without emptying the needle into a dry tared beaker by slowly and constantly depressing the piston. Determine the volume in millilitres calculated as the mass in grams divided by the density.

The volume measured for each of the containers is not less than the nominal volume.

PARENTERAL INFUSIONS

Select one container. Transfer the contents into a dry measuring cylinder of such a capacity that the volume to be determined occupies at least 40 per cent of the nominal volume of the cylinder. Measure the volume transferred.

The volume is not less than the nominal volume.

(7) This chapter has undergone pharmacopoeial harmonisation. See chapter *5.8. Pharmacopoeial harmonisation.*

01/2008:20918

2.9.18. PREPARATIONS FOR INHALATION: AERODYNAMIC ASSESSMENT OF FINE PARTICLES

This test is used to determine the fine particle characteristics of the aerosol clouds generated by preparations for inhalation.

Unless otherwise justified and authorised, one of the following apparatus and test procedures is used.

Stage mensuration is performed periodically together with confirmation of other dimensions critical to the effective operation of the impactor.

Re-entrainment (for apparatus D and E). To ensure efficient particle capture, coat each plate with glycerol, silicone oil or similar high viscosity liquid, typically deposited from a volatile solvent. Plate coating must be part of method validation and may be omitted where justified and authorised.

Mass balance. The total mass of the active substance is not less than 75 per cent and not more than 125 per cent of the average delivered dose determined during testing for uniformity of delivered dose. This is not a test of the inhaler but it serves to ensure that the results are valid.

APPARATUS A - GLASS IMPINGER

The apparatus is shown in Figure 2.9.18.-1 (see also Table 2.9.18.-1).

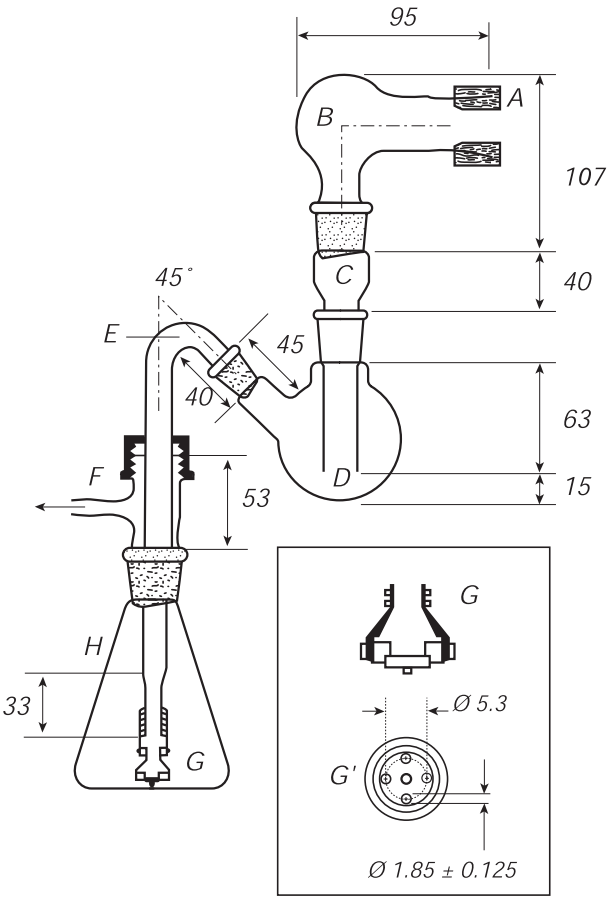

Figure 2.9.18.-1. – *Apparatus A: glass impinger*

Dimensions in millimetres (tolerances ± 1 mm unless otherwise prescribed)

Table 2.9.18.-1. – *Component specification for apparatus A in Figure 2.9.18.-1*

Code	Item	Description	Dimensions*
A	Mouthpiece adaptor	Moulded rubber adapter for actuator mouthpiece.	
B	Throat	Modified round-bottomed flask:	50 mL
		– *ground-glass inlet socket*	29/32
		– *ground-glass outlet cone*	24/29
C	Neck	Modified glass adapter:	
		– *ground-glass inlet socket*	24/29
		– *ground-glass outlet cone*	24/29
		Lower outlet section of precision-bore glass tubing:	
		– *bore diameter*	14
		Selected bore light-wall glass tubing:	
		– *external diameter*	17
D	Upper	Modified round-bottomed flask	100 mL
	impingement	– *ground-glass inlet socket*	24/29
	chamber	– *ground-glass outlet cone*	24/29
E	Coupling tube	Medium-wall glass tubing:	
		– *ground-glass cone*	14/23
		Bent section and upper vertical section:	
		– *external diameter*	13
		Lower vertical section:	
		– *external diameter*	8
F	Screwthread,	Plastic screw cap	28/13
	side-arm	Silicone rubber ring	28/11
	adaptor	PTFE washer	28/11
		Glass screwthread:	
		– *thread size*	28
		Side-arm outlet to vacuum pump:	
		– *minimum bore diameter*	5
G	Lower jet assembly	Modified polypropylene filter holder connected to lower vertical section of coupling tube by PTFE tubing.	see Figure 2.9.18.-1
		Acetal circular disc with the centres of four jets arranged on a projected circle of diameter 5.3 mm with an integral jet spacer peg:	10
		– *peg diameter*	2
		– *peg protrusion*	2
H	Lower	Conical flask	250 mL
	impingement chamber	– *ground-glass inlet socket*	24/29

* Dimensions in millimetres, unless otherwise stated.

Procedure for nebulisers

Introduce 7 mL and 30 mL of a suitable solvent into the upper and lower impingement chambers, respectively.

Connect all the component parts. Ensure that the assembly is vertical and adequately supported and that the jet spacer peg of the lower jet assembly just touches the bottom of the lower impingement chamber. Connect a suitable pump fitted with a filter (of suitable pore size) to the outlet of the apparatus. Adjust the air flow through the apparatus, as measured at the inlet to the throat, to 60 ± 5 L/min.

Introduce the liquid preparation for inhalation into the reservoir of the nebuliser. Fit the mouthpiece and connect it by means of an adapter to the device.

Switch on the pump of the apparatus and after 10 s switch on the nebuliser.

After 60 s, unless otherwise justified, switch off the nebuliser, wait for about 5 s and then switch off the pump of the apparatus. Dismantle the apparatus and wash the inner surface of the upper impingement chamber collecting the washings in a volumetric flask. Wash the inner surface of the lower impingement chamber collecting the washings in a second volumetric flask. Finally, wash the filter preceding the pump and its connections to the lower impingement chamber and combine the washings with those obtained from the lower impingement chamber. Determine the amount of active substance collected in each of the 2 flasks. Express the results for each of the 2 parts of the apparatus as a percentage of the total amount of active substance.

Procedure for pressurised inhalers

Place the actuator adapter in position at the end of the throat so that the mouthpiece end of the actuator, when inserted to a depth of about 10 mm, lines up along the horizontal axis of the throat and the open end of the actuator, which accepts the pressurised container, is uppermost and in the same vertical plane as the rest of the apparatus.

Introduce 7 mL and 30 mL of a suitable solvent into the upper and lower impingement chambers, respectively.

Connect all the component parts. Ensure that the assembly is vertical and adequately supported and that the lower jet-spacer peg of the lower jet assembly just touches the bottom of the lower impingement chamber. Connect a suitable pump to the outlet of the apparatus. Adjust the air flow through the apparatus, as measured at the inlet to the throat, to 60 ± 5 L/min.

Prime the metering valve by shaking for 5 s and discharging once to waste; after not less than 5 s, shake and discharge again to waste. Repeat a further 3 times.

Shake for about 5 s, switch on the pump to the apparatus and locate the mouthpiece end of the actuator in the adapter, discharge once immediately. Remove the assembled inhaler from the adapter, shake for not less than 5 s, relocate the mouthpiece end of the actuator in the adapter and discharge again. Repeat the discharge sequence. The number of discharges should be minimised and typically would not be greater than 10. After the final discharge wait for not less than 5 s and then switch off the pump. Dismantle the apparatus.

Wash the inner surface of the inlet tube to the lower impingement chamber and its outer surface that projects into the chamber with a suitable solvent, collecting the washings in the lower impingement chamber. Determine the content of active substance in this solution. Calculate the amount of active substance collected in the lower impingement chamber per discharge and express the results as a percentage of the dose stated on the label.

Procedure for powder inhalers

Introduce 7 mL and 30 mL of a suitable solvent into the upper and lower impingement chambers, respectively.

Connect all the component parts. Ensure that the assembly is vertical and adequately supported and that the jet-spacer peg of the lower jet assembly just touches the bottom of the lower impingement chamber. Without the inhaler in place, connect a suitable pump to the outlet of the apparatus. Adjust the air flow through the apparatus, as measured at the inlet to the throat, to 60 ± 5 L/min.

Prepare the inhaler for use and locate the mouthpiece in the apparatus by means of a suitable adapter. Switch on the pump for 5 s. Switch off the pump and remove the inhaler. Repeat the discharge sequence. The number of discharges should be minimised and typically would not be greater than 10. Dismantle the apparatus.

Wash the inner surface of the inlet tube to the lower impingement chamber and its outer surface that projects into the chamber with a suitable solvent, collecting the washings in the lower impingement chamber. Determine the content of active substance in this solution. Calculate the amount of active substance collected in the lower impingement chamber per discharge and express the results as a percentage of the dose stated on the label.

Fine particle dose and particle size distribution

APPARATUS C - MULTI-STAGE LIQUID IMPINGER

The multi-stage liquid impinger consists of impaction stages 1 (pre-separator), 2, 3 and 4 and an integral filter stage (stage 5), see Figures 2.9.18.-4/6. An impaction stage comprises an upper horizontal metal partition wall (B) through which a metal inlet jet tube (A) with its impaction plate (D) is protruding. A glass cylinder (E) with sampling port (F) forms the vertical wall of the stage, and a lower horizontal metal partition wall (G) through which the tube (H) connects to the next lower stage. The tube into stage 4 (U) ends in a multi-jet arrangement. The impaction plate (D) is secured in a metal frame (J) which is fastened by 2 wires (K) to a sleeve (L) secured on the jet tube. The horizontal face of the collection plate is perpendicular to the axis of the jet tube and centrally aligned. The upper surface of the impaction plate is slightly raised above the edge of the metal frame. A recess around the perimeter of the horizontal partition wall guides the position of the glass cylinder. The glass cylinders are sealed against the horizontal partition walls with gaskets (M) and clamped together by 6 bolts (N). The sampling ports are sealed by stoppers. The bottom-side of the lower partition wall of stage 4 has a concentrical protrusion fitted with a rubber O-ring (P) which seals against the edge of a filter placed in the filter holder. The filter holder (R) is constructed as a basin with a concentrical recess in which a perforated filter support (S) is flush-fitted. The filter holder is dimensioned for 76 mm diameter filters. The assembly of impaction stages is clamped onto the filter holder by 2 snap-locks (T). Connect an induction port (see Figure 2.9.18.-7) onto the stage 1 inlet jet tube of the impinger. A rubber O-ring on the jet tube provides an airtight connection to the induction port. A suitable mouthpiece adapter is used to provide an airtight seal between the inhaler and the induction port. The front face of the inhaler mouthpiece must be flush with the front face of the induction port.

Table 2.9.18.-2. – *Component specification for apparatus C in Figures 2.9.18.-4/6*

Code*	Item	Description	Dimensions**
A,H	Jet tube	Metal tube screwed onto partition wall sealed by gasket (C), polished inner surface	see Figure 2.9.18.-5
B,G	Partition wall	Circular metal plate	
		– *diameter*	120
		– *thickness*	see Figure 2.9.18.-5
C	Gasket	e.g. PTFE	to fit jet tube
D	Impaction plate	Porosity 0 sintered-glass disk	
		– *diameter*	see Figure 2.9.18.-5

Code*	Item	Description	Dimensions**
E	Glass cylinder	Plane polished cut glass tube	
		– *height, including gaskets*	46
		– *outer diameter*	100
		– *wall thickness*	3.5
		– *sampling port (F) diameter*	18
		– *stopper in sampling port*	ISO 24/25
J	Metal frame	L-profiled circular frame with slit	
		– *inner diameter*	to fit impaction plate
		– *height*	4
		– *thickness of horizontal section*	0.5
		– *thickness of vertical section*	2
K	Wire	Steel wire interconnecting metal frame and sleeve (2 for each frame)	
		– *diameter*	1
L	Sleeve	Metal sleeve secured on jet tube by screw	
		– *inner diameter*	to fit jet tube
		– *height*	6
		– *thickness*	5
M	Gasket	e.g. silicone	to fit glass cylinder
N	Bolt	Metal bolt with nut (6 pairs)	
		– *length*	205
		– *diameter*	4
P	O-ring	Rubber O-ring	
		– *diameter × thickness*	66.34 × 2.62
Q	O-ring	Rubber O-ring	
		– *diameter × thickness*	29.1 × 1.6
R	Filter holder	Metal housing with stand and outlet	see Figure 2.9.18.-6
S	Filter support	Perforated sheet metal	
		– *diameter*	65
		– *hole diameter*	3
		– *distance between holes (centre-points)*	4
T	Snap-locks		
U	Multi-jet tube	Jet tube (H) ending in multi-jet arrangement.	see inserts Figure 2.9.18.-5

* Refers to Figure 2.9.18.-4.

** Measures in millimetres with tolerances according to iso 2768-m unless otherwise stated.

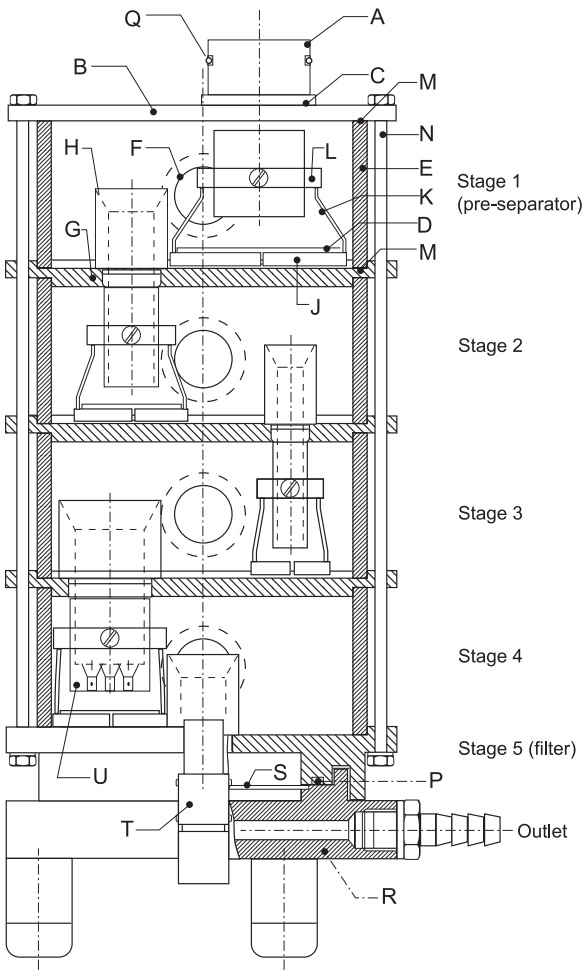

Figure 2.9.18.-4. – *Apparatus C: multi-stage liquid impinger*

Procedure for pressurised inhalers

Dispense 20 mL of a solvent, capable of dissolving the active substance into each of stages 1 to 4 and replace the stoppers. Tilt the apparatus to wet the stoppers, thereby neutralising electrostatic charge. Place a suitable filter capable of quantitatively collecting the active substance in stage 5 and assemble the apparatus. Place a suitable mouthpiece adapter in position at the end of the induction port so that the mouthpiece end of the actuator, when inserted, lines up along the horizontal axis of the induction port and the inhaler is positioned in the same orientation as intended for use. Connect a suitable vacuum pump to the outlet of the apparatus and adjust the air flow through the apparatus, as measured at the inlet to the induction port, to 30 L/min (± 5 per cent). Switch off the pump.

Unless otherwise prescribed in the patient instructions, shake the inhaler for 5 s and discharge 1 delivery to waste. Switch on the pump to the apparatus, locate the mouthpiece end of the actuator in the adapter and discharge the inhaler into the apparatus, depressing the valve for a sufficient time to ensure complete discharge. Wait for 5 s before removing the assembled inhaler from the adapter. Repeat the procedure. The number of discharges should be minimised and typically would not be greater than 10. The number of discharges is sufficient to ensure an accurate and precise determination of the fine particle dose. After the final discharge, wait for 5 s and then switch off the pump.

Dismantle the filter stage of the apparatus. Carefully remove the filter and extract the active substance into an aliquot of the solvent. Remove the induction port and mouthpiece adapter from the apparatus and extract the active substance into an aliquot of the solvent. If necessary, rinse the inside of the inlet jet tube to stage 1 with solvent, allowing the solvent to flow into the stage. Extract the active substance from the inner

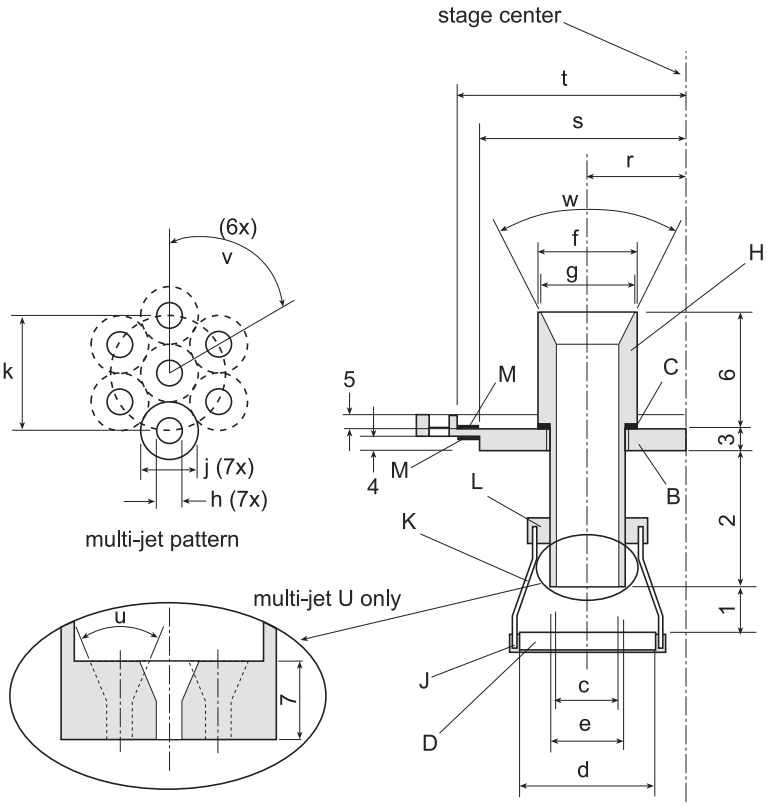

Figure 2.9.18.-5. – *Apparatus C: details of jet tube and impaction plate. Inserts show end of multi-jet tube U leading to stage 4. (Numbers and lowercase letters refer to Table 2.9.18.-3 and uppercase letters refer to Figure 2.9.18.-4).*

walls and the collection plate of each of the 4 upper stages of the apparatus into the solution in the respective stage by carefully tilting and rotating the apparatus, observing that no liquid transfer occurs between the stages.

Using a suitable method of analysis, determine the quantity of active substance contained in each of the aliquots of solvent.

Calculate the fine particle dose (see Calculations).

Table 2.9.18.-3. – *Dimensions[1] of jet tube with impaction plate of apparatus C*

Type	Code[2]	Stage 1	Stage 2	Stage 3	Stage 4	Filter (stage 5)
Distance	1	9.5 (-.0+.5)	5.5 (-.0+.5)	4.0 (-.0+.5)	6.0 (-.0+.5)	n.a.
Distance	2	26	31	33	30.5	0
Distance	3	8	5	5	5	5
Distance	4	3	3	3	3	n.a.
Distance	5	0	3	3	3	3
Distance	6 [3]	20	25	25	25	25
Distance	7	n.a.	n.a.	n.a.	8.5	n.a.
Diameter	c	25	14	8.0 (± .1)	21	14
Diameter	d	50	30	20	30	n.a.
Diameter	e	27.9	16.5	10.5	23.9	n.a.
Diameter	f	31.75 (-.0+.5)	22	14	31	22
Diameter	g	25.4	21	13	30	21
Diameter	h	n.a.	n.a.	n.a.	2.70 (± .5)	n.a.
Diameter	j	n.a.	n.a.	n.a.	6.3	n.a.
Diameter	k	n.a.	n.a.	n.a.	12.6	n.a.
Radius[4]	r	16	22	27	28.5	0
Radius	s	46	46	46	46	n.a.
Radius	t	n.a.	50	50	50	50
Angle	w	10°	53°	53°	53°	53°
Angle	u	n.a.	n.a.	n.a.	45°	n.a.
Angle	v	n.a.	n.a.	n.a.	60°	n.a.

(1) Measures in millimetres with tolerances according to ISO 2768-m unless otherwise stated
(2) Refer to Figure 2.9.18.-5
(3) Including gasket
(4) Relative centreline of stage compartment
n.a. = not applicable

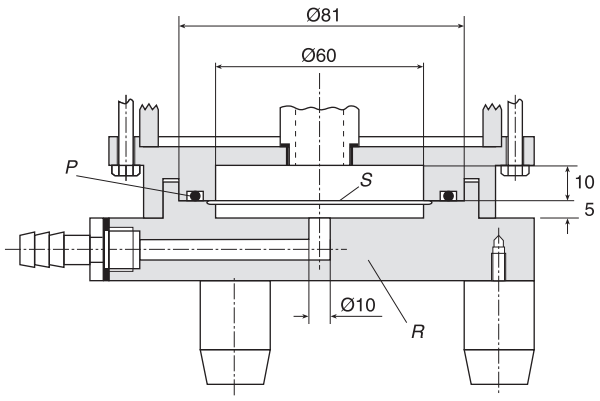

Figure 2.9.18.-6. – *Apparatus C: details of the filter stage (stage 5). Numbers refer to dimensions (Ø = diameter). Uppercase letters refer to Table 2.9.18.-2. Dimensions in millimetres unless otherwise stated*

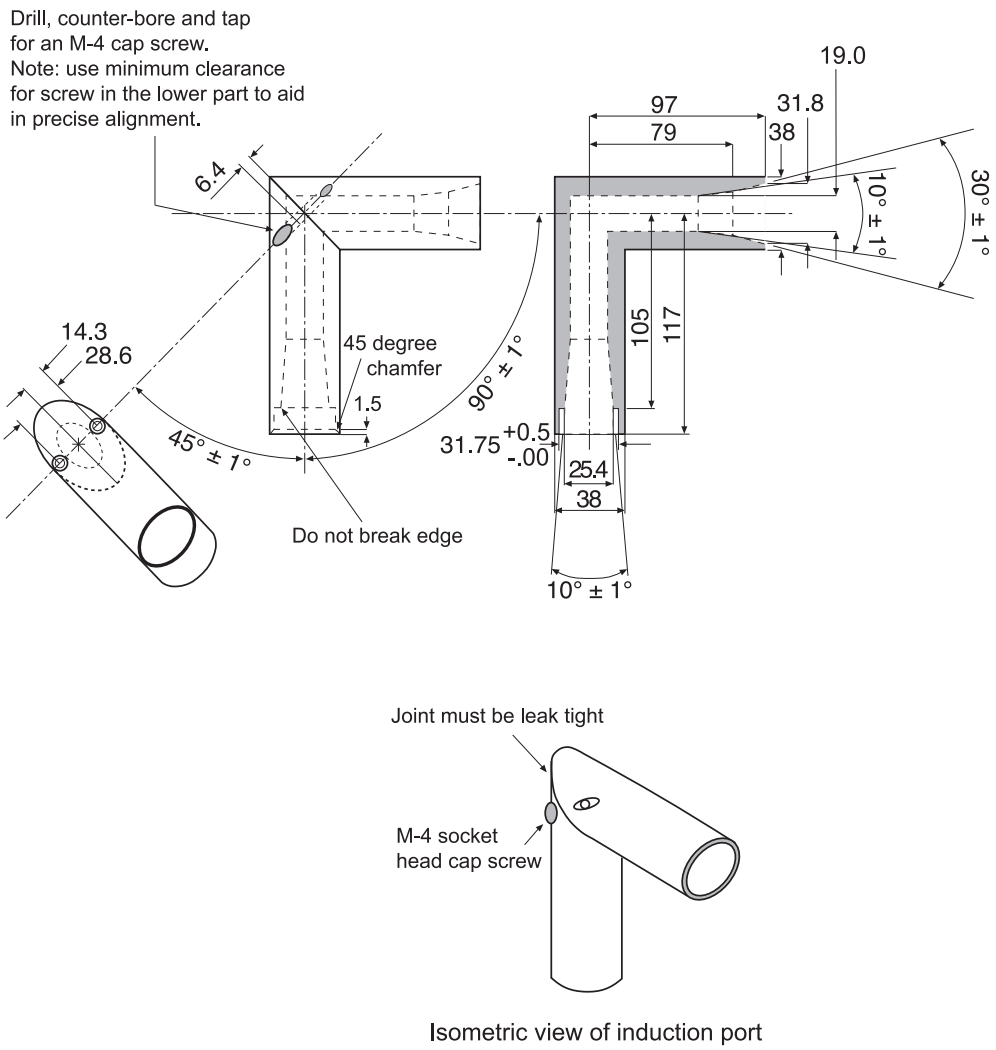

1. Material may be aluminium, stainless steel or other suitable material.
2. Machine from 38 mm bar stock.
3. Bore 19 mm hole through bar.
4. Cut tube to exact 45° as shown.
5. The inner bores and tapers should be smooth – surface roughness Ra approx. 0.4 µm.
6. Mill joining cads of stock to provide a liquid tight leak-free seal.
7. Set up a holding fixture for aligning the inner 19 mm bore and for drilling and tapping M4 × 0.7 threads. There must be virtually no mismatch of the inner bores in the miter joint.

Figure 2.9.18.-7. – *Induction port*

Dimensions in millimetres unless otherwise stated

Procedure for powder inhalers

Place a suitable low resistance filter capable of quantitatively collecting the active substance in stage 5 and assemble the apparatus. Connect the apparatus to a flow system according to the scheme specified in Figure 2.9.18.-8 and Table 2.9.18.-4. Unless otherwise defined, conduct the test at the flow rate, Q_{out}, used in the test for uniformity of delivered dose, drawing 4 L of air from the mouthpiece of the inhaler and through the apparatus.

Connect a flowmeter to the induction port. Use a flowmeter calibrated for the volumetric flow leaving the meter, or calculate the volumetric flow leaving the meter (Q_{out}) using the ideal gas law. For a meter calibrated for the entering volumetric flow (Q_{in}), use the following expression:

$$Q_{out} = \frac{Q_{in} \times P_0}{P_0 - \Delta P}$$

P_0 = atmospheric pressure,

ΔP = pressure drop over the meter.

Adjust the flow control valve to achieve steady flow through the system at the required rate, Q_{out} (± 5 per cent). Switch off the pump. Ensure that critical flow occurs in the flow control valve by the following procedure.

With the inhaler in place and the test flow rate established, measure the absolute pressure on both sides of the control valve (pressure reading points P2 and P3 in Figure 2.9.18.-8). A ratio P3/P2 of less than or equal to 0.5 indicates critical flow. Switch to a more powerful pump and re-measure the test flow rate if critical flow is not indicated.

Dispense 20 mL of a solvent, capable of dissolving the active substance into each of the 4 upper stages of the apparatus and replace the stoppers. Tilt the apparatus to wet the stoppers, thereby neutralising electrostatic charge. Place a suitable mouthpiece adapter in position at the end of the induction port.

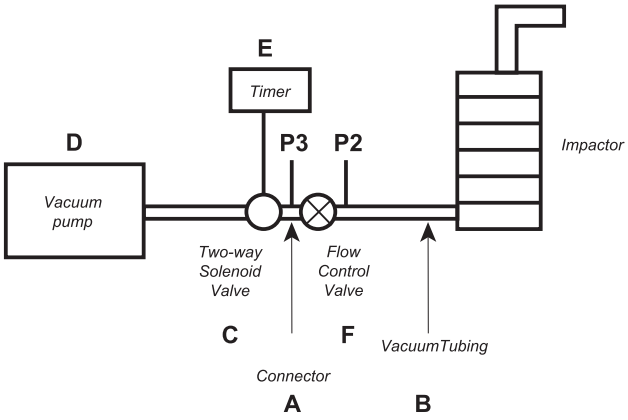

Figure 2.9.18.-8. – *Experimental set-up for testing powder inhalers*

Table 2.9.18.-4. – *Component specification for Figure 2.9.18.-8*

Code	Item	Description
A	Connector	ID ≥ 8 mm, e.g., short metal coupling, with low-diameter branch to P3.
B	Vacuum tubing	A length of suitable tubing having an ID ≥ 8 mm and an internal volume of 25 ± 5 mL.
C	2-way solenoid valve	A 2-way, 2-port solenoid valve having a minimum airflow resistance orifice with ID ≥ 8 mm and an opening time ≤ 100 ms. (e.g. type 256-A08, Bürkert GmbH, D-74653 Ingelfingen), or equivalent.
D	Vacuum pump	Pump must be capable of drawing the required flow rate through the assembled apparatus with the powder inhaler in the mouthpiece adapter (e.g. product type 1023, 1423 or 2565, Gast Manufacturing Inc., Benton Harbor, MI 49022), or equivalent. Connect the pump to the 2-way solenoid valve using short and/or wide (ID ≥ 10 mm) vacuum tubing and connectors to minimise pump capacity requirements.
E	Timer	Timer capable to drive the 2-way solenoid valve for the required duration (e.g. type G814, RS Components International, Corby, NN17 9RS, UK), or equivalent.
P2 P3	Pressure measurements	Determine under steady-state flow condition with an absolute pressure transducer.
F	Flow control valve	Adjustable regulating valve with maximum C_v ≥ 1, (e.g. type 8FV12LNSS, Parker Hannifin plc., Barnstaple, EX31 1NP, UK), or equivalent.

Prepare the powder inhaler for use according to patient instructions. With the pump running and the 2-way solenoid valve closed, locate the mouthpiece of the inhaler in the mouthpiece adapter. Discharge the powder into the apparatus by opening the valve for the required time, T (± 5 per cent). Repeat the procedure. The number of discharges should be minimised and typically would not be greater than 10. The number of discharges is sufficient to ensure an accurate and precise determination of fine particle dose.

Dismantle the filter stage of the apparatus. Carefully remove the filter and extract the active substance into an aliquot of the solvent. Remove the induction port and mouthpiece adapter from the apparatus and extract the active substance into an aliquot of the solvent. If necessary, rinse the inside of the inlet jet tube to stage 1 with solvent, allowing the solvent to flow into the stage. Extract the active substance from the inner walls and the collection plate of each of the 4 upper stages of the apparatus into the solution in the respective stage by carefully tilting and rotating the apparatus, observing that no liquid transfer occurs between the stages.

Using a suitable method of analysis, determine the amount of active substance contained in each of the aliquots of solvent.

Calculate the fine particle dose (see Calculations).

APPARATUS D - ANDERSEN CASCADE IMPACTOR

The Andersen 1 ACFM non-viable cascade impactor consists of 8 stages together with a final filter. Material of construction may be aluminium, stainless steel or other suitable material. The stages are clamped together and sealed with O-rings. Critical dimensions applied by the manufacturer of apparatus D are provided in Table 2.9.18.-5. In use, some occlusion and wear of holes will occur. In-use mensuration tolerances need to be justified. In the configuration used for pressurised inhalers (Figure 2.9.18.-9) the entry cone of the impactor is connected to an induction port (see Figure 2.9.18.-7). A suitable mouthpiece adapter is used to provide an airtight seal between the inhaler and the induction port. The front face of the inhaler mouthpiece must be flush with the front face of the induction port.

In the configuration for powder inhalers, a pre-separator is placed above the top stage to collect large masses of non-respirable powder. It is connected to the induction port as shown in Figure 2.9.18.-10. To accommodate high flow rates through the impactor, the outlet nipple, used to connect the impactor to the vacuum system is enlarged to have an internal diameter of greater than or equal to 8 mm.

Table 2.9.18.-5. – *Critical dimensions for apparatus D*

Description	Number	Dimension (mm)
Stage 0 nozzle diameter	96	2.55 ± 0.025
Stage 1 nozzle diameter	96	1.89 ± 0.025
Stage 2 nozzle diameter	400	0.914 ± 0.0127
Stage 3 nozzle diameter	400	0.711 ± 0.0127
Stage 4 nozzle diameter	400	0.533 ± 0.0127
Stage 5 nozzle diameter	400	0.343 ± 0.0127
Stage 6 nozzle diameter	400	0.254 ± 0.0127
Stage 7 nozzle diameter	201	0.254 ± 0.0127

Procedure for pressurised inhalers

Assemble the Andersen impactor with a suitable filter in place. Ensure that the system is airtight. In that respect, follow the manufacturer's instructions. Place a suitable mouthpiece adapter in position at the end of the induction port so that the mouthpiece end of the actuator, when inserted, lines up along the horizontal axis of the induction port and the inhaler unit is positioned in the same orientation as the intended use. Connect a suitable pump to the outlet of the apparatus and adjust the air flow through the apparatus, as measured at the inlet to the induction port, to 28.3 L/min (± 5 per cent). Switch off the pump.

Unless otherwise prescribed in the patient instructions, shake the inhaler for 5 s and discharge one delivery to waste. Switch on the pump to the apparatus, locate the mouthpiece end of the actuator in the adapter and discharge the inverted inhaler into the apparatus, depressing the valve for a sufficient time to ensure complete discharge. Wait for 5 s before removing the assembled inhaler from the adapter. Repeat the procedure. The number of discharges should be minimised and typically would not be greater than 10. The number of discharges is sufficient to ensure an accurate and precise determination of the fine particle dose. After the final discharge, wait for 5 s and then switch off the pump.

Dismantle the apparatus. Carefully remove the filter and extract the active substance into an aliquot of the solvent. Remove the induction port and mouthpiece adapter from the apparatus and extract the active substance into an aliquot of the solvent. Extract the active substance from the inner walls and the collection plate of each of the stages of the apparatus into aliquots of solvent.

Using a suitable method of analysis, determine the quantity of active substance contained in each of the aliquots of solvent.

Calculate the fine particle dose (see Calculations).

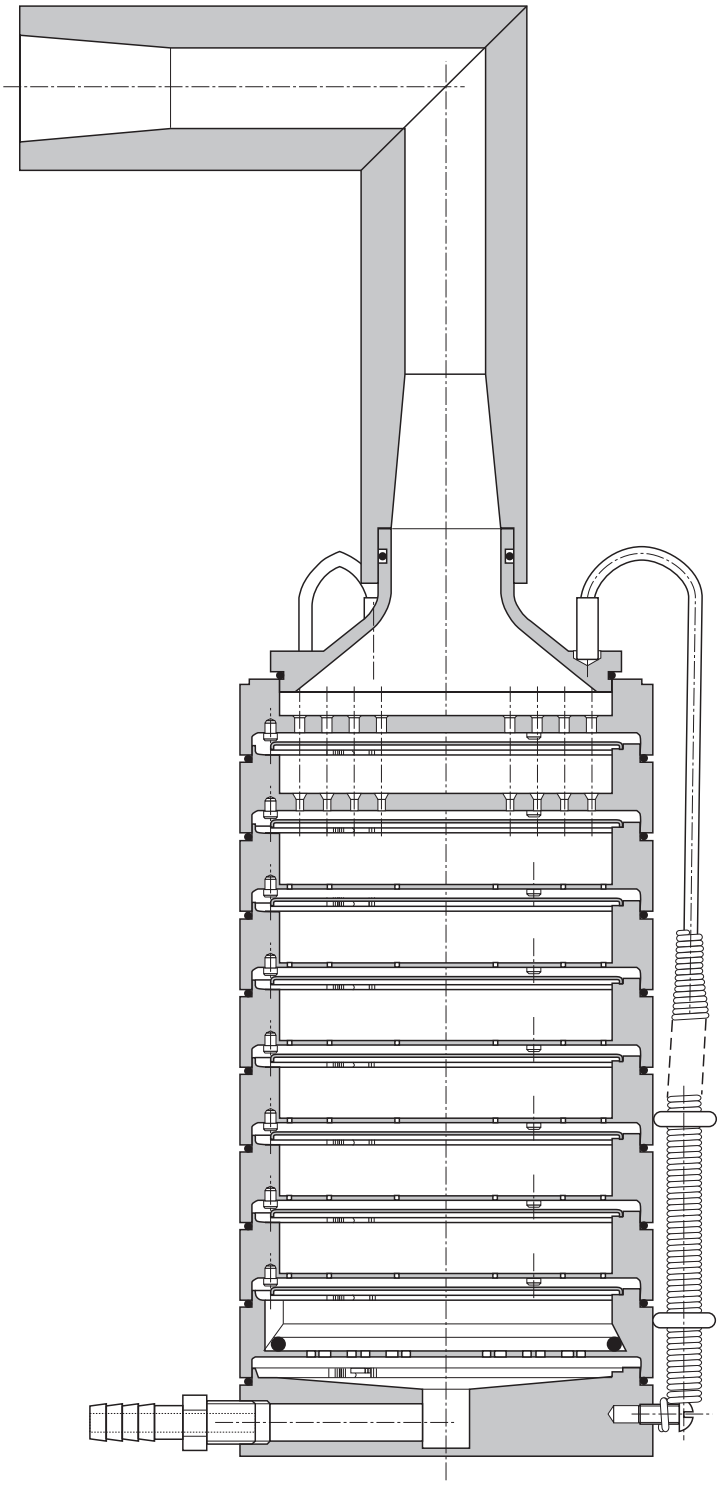

Figure 2.9.18.-9. – *Apparatus D: Andersen cascade impactor used for pressurised inhalers*

Procedure for powder inhalers

The aerodynamic cut-off diameters of the individual stages of this apparatus are currently not well-established at flow rates other than 28.3 L/min. Users must justify and validate the use of the impactor in the chosen conditions, when flow rates different from 28.3 L/min are selected.

Assemble the Andersen impactor with the pre-separator and a suitable filter in place and ensure that the system is airtight. Depending on the product characteristics, the pre-separator may be omitted, where justified and authorised. Stages 6 and 7 may also be omitted at high flow rates, if justified. The pre-separator may be coated in the same way as the plates or may contain 10 mL of a suitable solvent. Connect the apparatus to a flow system according to the scheme specified in Figure 2.9.18.-8 and Table 2.9.18.-4.

Unless otherwise defined, conduct the test at the flow rate, Q_{out}, used in the test for uniformity of delivered dose drawing 4 L of air from the mouthpiece of the inhaler and through the apparatus.

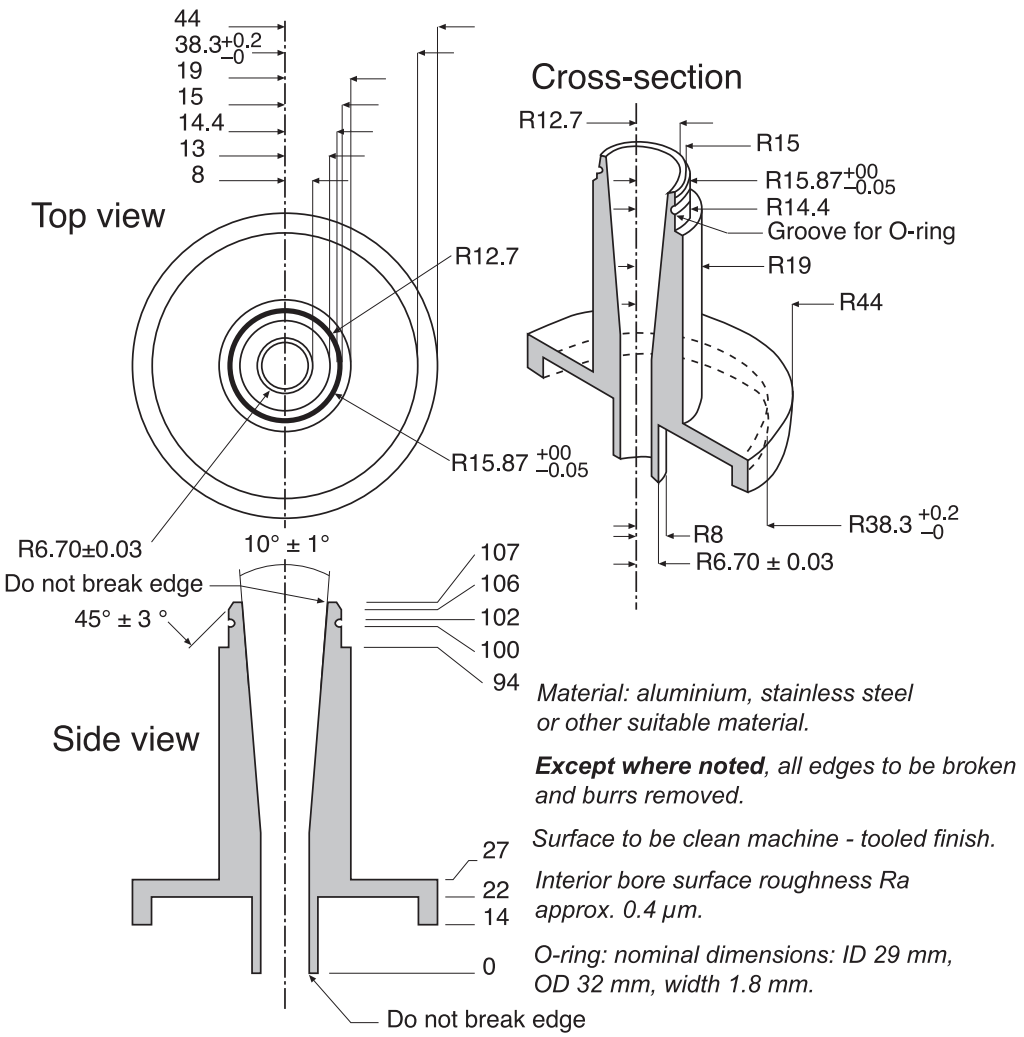

Figure 2.9.18.-10. – *Connection of the induction port to the preseparator of the Andersen cascade impactor*
Dimensions in millimetres unless otherwise stated

Connect a flowmeter to the induction port. Use a flowmeter calibrated for the volumetric flow leaving the meter, or calculate the volumetric flow leaving the meter (Q_{out}) using the ideal gas law. For a meter calibrated for the entering volumetric flow (Q_{in}), use the following expression:

$$Q_{out} = \frac{Q_{in} \times P_0}{P_0 - \Delta P}$$

P_0 = atmospheric pressure,

ΔP = pressure drop over the meter.

Adjust the flow control valve to achieve steady flow through the system at the required rate, Q_{out} (± 5 per cent). Ensure that critical flow occurs in the flow control valve by the procedure described for Apparatus C. Switch off the pump.

Prepare the powder inhaler for use according to the patient instructions. With the pump running and the 2-way solenoid valve closed, locate the mouthpiece of the inhaler in the mouthpiece adapter. Discharge the powder into the apparatus by opening the valve for the required time, T (± 5 per cent). Repeat the discharge sequence. The number of discharges should be minimised and typically would not be greater than 10. The number of discharges is sufficient to ensure an accurate and precise determination of fine particle dose.

Dismantle the apparatus. Carefully remove the filter and extract the active substance into an aliquot of the solvent. Remove the pre-separator, induction port and mouthpiece adapter from the apparatus and extract the active substance into an aliquot of the solvent. Extract the active substance from the inner walls and the collection plate of each of the stages of the apparatus into aliquots of solvent.

Using a suitable method of analysis, determine the quantity of active substance contained in each of the aliquots of solvent.

Calculate the fine particle dose (see Calculations).

APPARATUS E

Apparatus E is a cascade impactor with 7 stages and a micro-orifice collector (MOC). Over the flow rate range of 30 L/min to 100 L/min the 50 per cent-efficiency cut-off diameters (D_{50} values) range between 0.24 µm to 11.7 µm, evenly spaced on a logarithmic scale. In this flow range, there are always at least 5 stages with D_{50} values between 0.5 µm and 6.5 µm. The collection efficiency curves for each stage are sharp and minimise overlap between stages.

Material of construction may be aluminium, stainless steel or other suitable material.

The impactor configuration has removable impaction cups with all the cups in one plane (Figures 2.9.18.-11/14). There are 3 main sections to the impactor; the bottom frame that holds the impaction cups, the seal body that holds the jets and the lid that contains the interstage passageways (Figures 2.9.18.-11/12). Multiple nozzles are used at all but the first stage (Figure 2.9.18.-13). The flow passes through the impactor in a saw-tooth pattern.

Critical dimensions are provided in Table 2.9.18.-6.

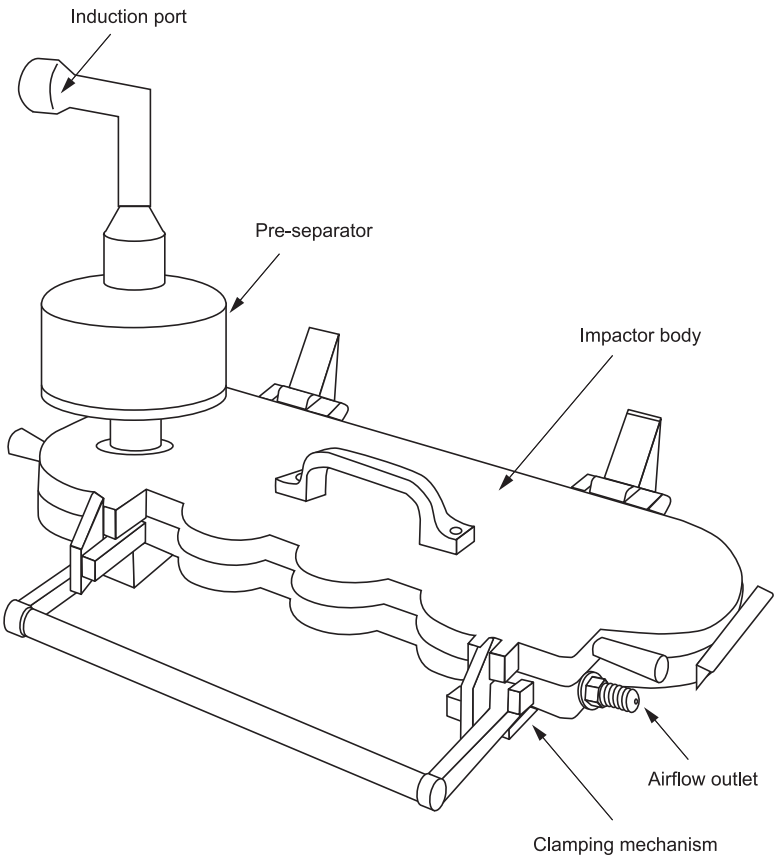

Figure 2.9.18.-11. – *Apparatus E (shown with the pre-separator in place)*

Table 2.9.18.-6. – *Critical dimensions for apparatus E*

Description	Dimension (mm)
Pre-separator (dimension a - see Figure 2.9.18.-15)	12.8 ± 0.05
Stage 1* Nozzle diameter	14.3 ± 0.05
Stage 2* Nozzle diameter	4.88 ± 0.04
Stage 3* Nozzle diameter	2.185 ± 0.02
Stage 4* Nozzle diameter	1.207 ± 0.01
Stage 5* Nozzle diameter	0.608 ± 0.01
Stage 6* Nozzle diameter	0.323 ± 0.01
Stage 7* Nozzle diameter	0.206 ± 0.01
MOC*	approx. 0.070
Cup depth (dimension b - see Figure 2.9.18.-14)	14.625 ± 0.10
Collection cup surface roughness (Ra)	0.5 - 2 µm
Stage 1 nozzle to seal body distance** - dimension c	0 ± 1.18
Stage 2 nozzle to seal body distance** - dimension c	5.236 ± 0.736
Stage 3 nozzle to seal body distance** - dimension c	8.445 ± 0.410
Stage 4 nozzle to seal body distance** - dimension c	11.379 ± 0.237
Stage 5 nozzle to seal body distance** - dimension c	13.176 ± 0.341
Stage 6 nozzle to seal body distance** - dimension c	13.999 ± 0.071
Stage 7 nozzle to seal body distance** - dimension c	14.000 ± 0.071
MOC nozzle to seal body distance** - dimension c	14.429 to 14.571

* See Figure 2.9.18.-13
** See Figure 2.9.18.-14

In routine operation, the seal body and lid are held together as a single assembly. The impaction cups are accessible when this assembly is opened at the end of an inhaler test. The cups are held in a support tray, so that all cups can be removed from the impactor simultaneously by lifting out the tray.

An induction port with internal dimensions (relevant to the airflow path) defined in Figure 2.9.18.-7 connects to the impactor inlet. A pre-separator can be added when required, typically with powder inhalers, and connects between the induction port and the impactor. A suitable mouthpiece adapter is used to provide an airtight seal between the inhaler and the induction port.

Apparatus E contains a terminal Micro-Orifice Collector (MOC) that for most formulations will eliminate the need for a final filter as determined by method validation. The MOC is an impactor plate with nominally 4032 holes, each approximately 70 µm in diameter. Most particles not captured on stage 7 of the impactor will be captured on the cup surface below the MOC. For impactors operated at 60 L/min, the MOC is capable of collecting 80 per cent of 0.14 µm particles. For formulations with a significant fraction of particles not captured by the MOC, there is an optional filter holder that can replace the MOC or be placed downstream of the MOC (a glass fibre filter is suitable).

Procedure for pressurised inhalers

Place cups into the apertures in the cup tray. Insert the cup tray into the bottom frame, and lower into place. Close the impactor lid with the seal body attached and operate the handle to lock the impactor together so that the system is airtight.

Connect an induction port with internal dimensions defined in Figure 2.9.18.-7 to the impactor inlet. Place a suitable mouthpiece adapter in position at the end of the induction port so that the mouthpiece end of the actuator, when inserted, lines up along the horizontal axis of the induction port. The front face of the inhaler mouthpiece must be flush with the front face of the induction port. When attached to the mouthpiece adapter, the inhaler is positioned in the same

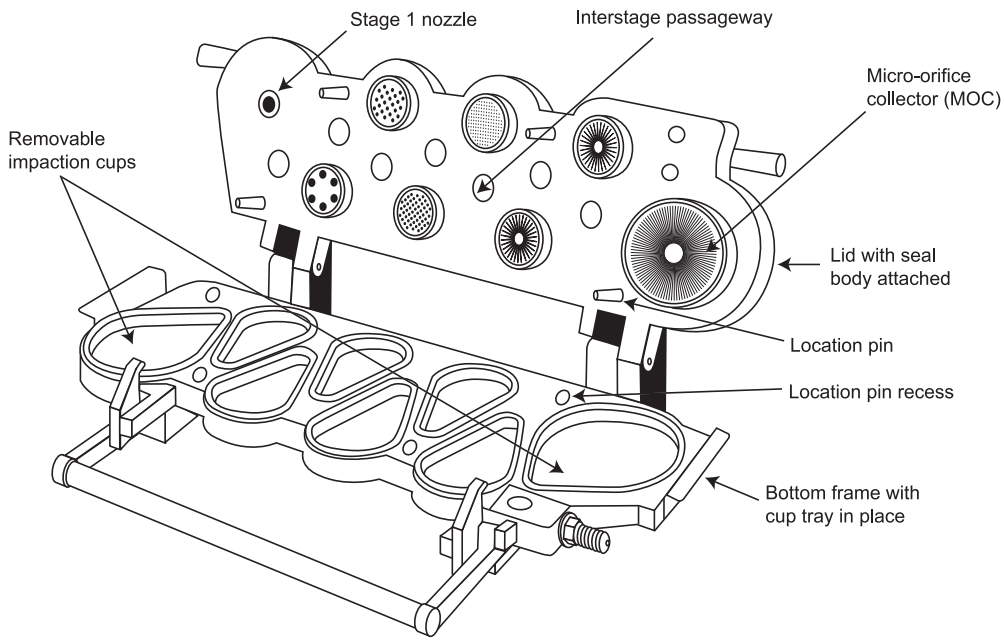

Figure 2.9.18.-12. – *Apparatus E showing component parts*

orientation as intended for use. Connect a suitable pump to the outlet of the apparatus and adjust the air flow through the apparatus, as measured at the inlet to the induction port, to 30 L/min (± 5 per cent). Switch off the pump.

Unless otherwise prescribed in the patient instructions, shake the inhaler for 5 s and discharge 1 delivery to waste. Switch on the pump to the apparatus. Prepare the inhaler for use according to the patient instructions, locate the mouthpiece end of the actuator in the adapter and discharge the inhaler into the apparatus, depressing the valve for a sufficient time to ensure a complete discharge. Wait for 5 s before removing the assembled inhaler from the adapter. Repeat the procedure. The number of discharges should be minimised, and typically would not be greater than 10. The number of discharges is sufficient to ensure an accurate and precise determination of the fine particle dose. After the final discharge, wait for 5 s and then switch off the pump.

Dismantle the apparatus and recover the active substance as follows: remove the induction port and mouthpiece adapter from the apparatus and recover the deposited active substance into an aliquot of solvent. Open the impactor by releasing the handle and lifting the lid. Remove the cup tray, with the collection cups, and recover the active substance in each cup into an aliquot of solvent.

Using a suitable method of analysis, determine the quantity of active substance contained in each of the aliquots of solvent. Calculate the fine particle dose (see Calculations).

Procedure for powder inhalers

Assemble the apparatus with the pre-separator (Figure 2.9.18.-15). Depending on the product characteristics, the pre-separator may be omitted, where justified.

Place cups into the apertures in the cup tray. Insert the cup tray into the bottom frame, and lower into place. Close the impactor lid with the seal body attached and operate the handle to lock the impactor together so that the system is airtight.

When used, the pre-separator should be assembled as follows: assemble the pre-separator insert into the pre-separator base. Fit the pre-separator base to the impactor inlet. Add 15 mL of the solvent used for sample recovery to the central cup of the pre-separator insert. Place the pre-separator body on top of this assembly and close the 2 catches.

Connect an induction port with internal dimensions defined in Figure 2.9.18.-7 to the impactor inlet or pre-separator inlet. Place a suitable mouthpiece adapter in position at the end of the induction port so that the mouthpiece end of the inhaler, when inserted, lines up along the horizontal axis of the induction port. The front face of the inhaler mouthpiece must be flush with the front face of the induction port. When attached to the mouthpiece adapter, the inhaler is positioned

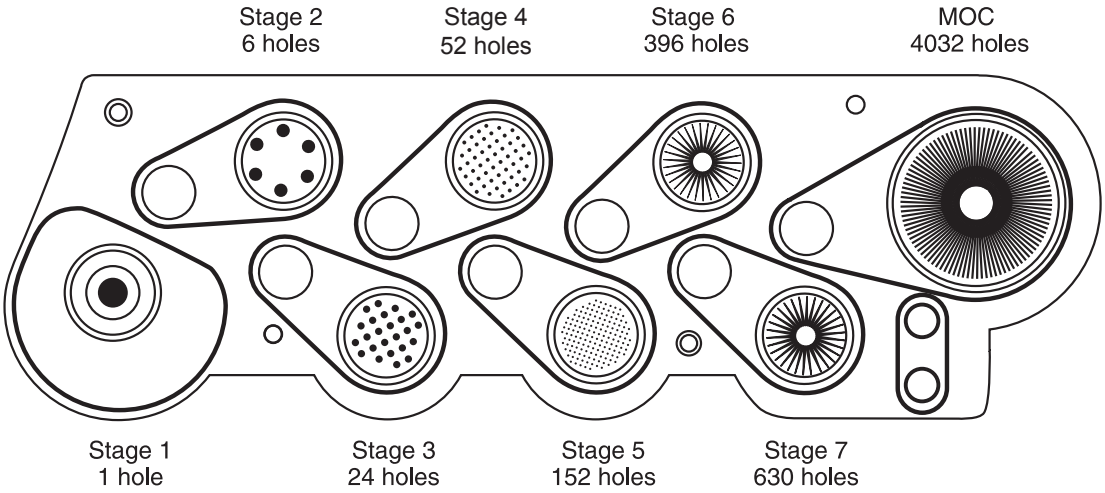

Figure 2.9.18.-13. – *Apparatus E: nozzle configuration*

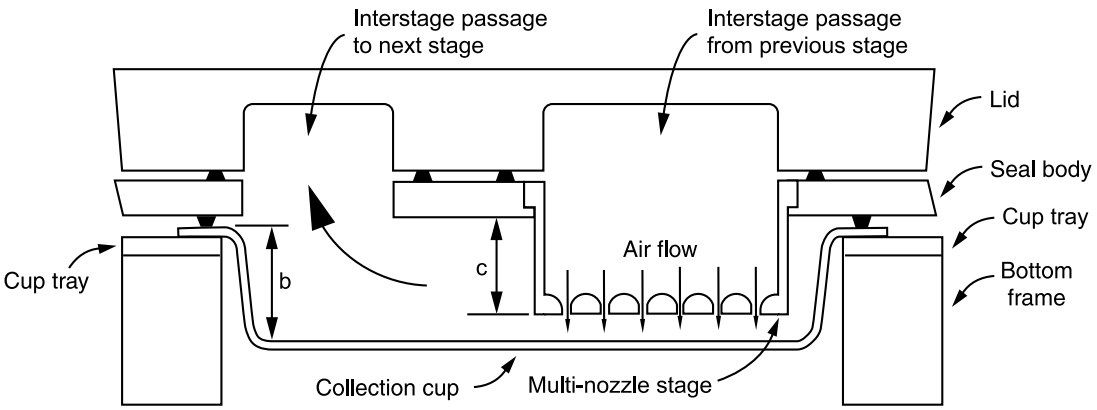

Figure 2.9.18.-14. – *Apparatus E: configuration of interstage passageways*

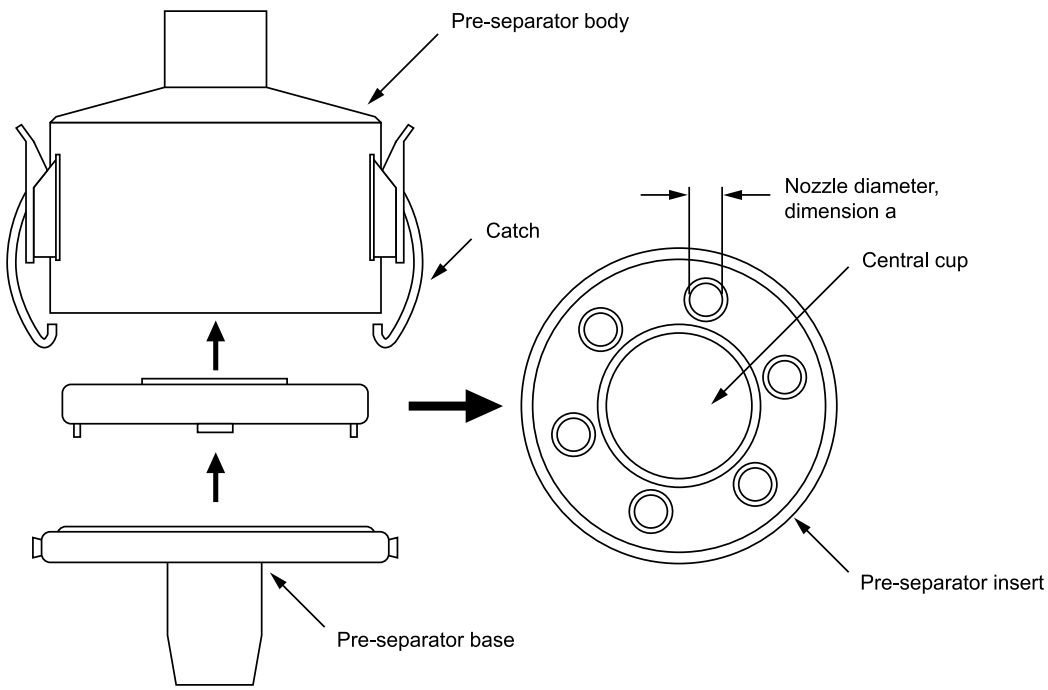

Figure 2.9.18.-15. – *Apparatus E: pre-separator configuration*

in the same orientation as intended for use. Connect the apparatus to a flow system according to the scheme specified in Figure 2.9.18.-8 and Table 2.9.18.-4.

Unless otherwise prescribed, conduct the test at the flow rate, Q_{out}, used in the test for uniformity of delivered dose drawing 4 L of air from the mouthpiece of the inhaler and through the apparatus. Connect a flowmeter to the induction port. Use a flowmeter calibrated for the volumetric flow leaving the meter, or calculate the volumetric flow leaving the meter (Q_{out}) using the ideal gas law. For a meter calibrated for the entering volumetric flow (Q_{in}), use the following expression:

$$Q_{out} = \frac{Q_{in} \times P_0}{P_0 - \Delta P}$$

P_0 = atmospheric pressure,

ΔP = pressure drop over the meter.

Adjust the flow control valve to achieve steady flow through the system at the required rate, Q_{out} (± 5 per cent). Ensure that critical flow occurs in the flow control valve by the procedure described for Apparatus C. Switch off the pump.

Prepare the powder inhaler for use according to the patient instructions. With the pump running and the 2-way solenoid valve closed, locate the mouthpiece of the inhaler in the mouthpiece adapter. Discharge the powder into the apparatus by opening the valve for the required time, T (± 5 per cent). Repeat the discharge sequence. The number of discharges should be minimised and typically would not be greater than 10. The number of discharges is sufficient to ensure an accurate and precise determination of fine particle dose.

Dismantle the apparatus and recover the active substance as follows: remove the induction port and mouthpiece adapter from the pre-separator, when used, and recover the deposited active substance into an aliquot of solvent. When used, remove the pre-separator from the impactor, being careful to avoid spilling the cup liquid into the impactor. Recover the active substance from the pre-separator.

Open the impactor by releasing the handle and lifting the lid. Remove the cup tray, with the collection cups, and recover the active substance in each cup into an aliquot of solvent.

Using a suitable method of analysis, determine the quantity of active substance contained in each of the aliquots of solvent.

Calculate the fine particle dose (see Calculations).

CALCULATIONS

From the analysis of the solutions, calculate the mass of active substance deposited on each stage per discharge and the mass of active substance per discharge deposited in the induction port, mouthpiece adapter and when used, the pre-separator.

Starting at the final collection site (filter or MOC), derive a table of cumulative mass versus cut-off diameter of the respective stage (see Tables 2.9.18.-7 for Apparatus C, 2.9.18.-8 for Apparatus D, 2.9.18.-9 for Apparatus E). Calculate by interpolation the mass of the active substance less than 5 µm. This is the Fine Particle Dose (FPD).

If necessary, and where appropriate (e.g., where there is a log-normal distribution), plot the cumulative fraction of active substance versus cut-off diameter (see Tables 2.9.18.-7/9) on log probability paper, and use this plot to determine values for the Mass Median Aerodynamic Diameter (MMAD) and Geometric Standard Deviation (GSD) as appropriate. Appropriate computational methods may also be used.

Table 2.9.18.-7. – *Calculations for Apparatus C. Use* $q = \sqrt{(60/Q)}$, *where Q is the test flow rate in litres per minute* (Q_{out} *for powder inhalers)*

Cut-off diameter (µm)	Mass of active substance deposited per discharge	Cumulative mass of active substance deposited per discharge	Cumulative fraction of active substance (per cent)
$d_4 = 1.7 \times q$	mass from stage 5, m_5*	$c_4 = m_5$	$f_4 = (c_4/c) \times 100$
$d_3 = 3.1 \times q$	mass from stage 4, m_4	$c_3 = c_4 + m_4$	$f_3 = (c_3/c) \times 100$
$d_2 = 6.8 \times q$	mass from stage 3, m_3	$c_2 = c_3 + m_3$	$f_2 = (c_2/c) \times 100$
	mass from stage 2, m_2	$c = c_2 + m_2$	100

* Stage 5 is the filter stage

Table 2.9.18.-8. – *Calculations for Apparatus D when used at a flow rate of 28.3 L/min*

Cut-off diameter (µm)	Mass of active substance deposited per discharge	Cumulative mass of active substance deposited per discharge	Cumulative fraction of active substance (per cent)
$d_7 = 0.4$	mass from stage 8, m_8	$c_7 = m_8$	$f_7 = (c_7/c) \times 100$
$d_6 = 0.7$	mass from stage 7, m_7	$c_6 = c_7 + m_7$	$f_6 = (c_6/c) \times 100$
$d_5 = 1.1$	mass from stage 6, m_6	$c_5 = c_6 + m_6$	$f_5 = (c_5/c) \times 100$
$d_4 = 2.1$	mass from stage 5, m_5	$c_4 = c_5 + m_5$	$f_4 = (c_4/c) \times 100$
$d_3 = 3.3$	mass from stage 4, m_4	$c_3 = c_4 + m_4$	$f_3 = (c_3/c) \times 100$
$d_2 = 4.7$	mass from stage 3, m_3	$c_2 = c_3 + m_3$	$f_2 = (c_2/c) \times 100$
$d_1 = 5.8$	mass from stage 2, m_2	$c_1 = c_2 + m_2$	$f_1 = (c_1/c) \times 100$
$d_0 = 9.0$	mass from stage 1, m_1	$c_0 = c_1 + m_1$	$f_0 = (c_0/c) \times 100$
	mass from stage 0, m_0	$c = c_0 + m_0$	100

Table 2.9.18.-9. – *Calculations for Apparatus E. Use* $q = (60/Q)^x$, *where Q is the test flow rate in litres per minute, and x is listed in the table*

Cut-off diameter (µm)	x	Mass of active substance deposited per discharge	Cumulative mass of active substance deposited per discharge	Cumulative fraction of active substance (per cent)
$d_7 = 0.34 \times q$	0.67	mass from MOC or terminal filter, m_8	$c_7 = m_8$	$F_7 = (c_7/c) \times 100$
$d_6 = 0.55 \times q$	0.60	mass from stage 7, m_7	$c_6 = c_7 + m_7$	$F_6 = (c_6/c) \times 100$
$d_5 = 0.94 \times q$	0.53	mass from stage 6, m_6	$c_5 = c_6 + m_6$	$F_5 = (c_5/c) \times 100$
$d_4 = 1.66 \times q$	0.47	mass from stage 5, m_5	$c_4 = c_5 + m_5$	$F_4 = (c_4/c) \times 100$
$d_3 = 2.82 \times q$	0.50	mass from stage 4, m_4	$c_3 = c_4 + m_4$	$F_3 = (c_3/c) \times 100$
$d_2 = 4.46 \times q$	0.52	mass from stage 3, m_3	$c_2 = c_3 + m_3$	$F_2 = (c_2/c) \times 100$
$d_1 = 8.06 \times q$	0.54	mass from stage 2, m_2	$c_1 = c_2 + m_2$	$F_1 = (c_1/c) \times 100$
		mass from stage 1, m_1	$c = c_1 + m_1$	100

04/2011:20919

2.9.19. PARTICULATE CONTAMINATION: SUB-VISIBLE PARTICLES[8]

Particulate contamination of injections and infusions consists of extraneous, mobile undissolved particles, other than gas bubbles, unintentionally present in the solutions.

For the determination of particulate contamination 2 procedures, Method 1 (Light Obscuration Particle Count Test) and Method 2 (Microscopic Particle Count Test), are specified hereinafter. When examining injections and infusions for sub-visible particles, Method 1 is preferably applied. However, it may be necessary to test some preparations by the light obscuration particle count test followed by the microscopic particle count test to reach a conclusion on conformance to the requirements.

Not all parenteral preparations can be examined for sub-visible particles by one or both of these methods. When Method 1 is not applicable, e.g. in case of preparations having reduced clarity or increased viscosity, the test is carried out according to Method 2. Emulsions, colloids, and liposomal preparations are examples. Similarly, products that produce air or gas bubbles when drawn into the sensor may also require microscopic particle count testing. If the viscosity of the preparation to be tested is sufficiently high so as to preclude its examination by either test method, a quantitative dilution with an appropriate diluent may be made to decrease viscosity, as necessary, to allow the analysis to be performed.

The results obtained in examining a discrete unit or group of units for particulate contamination cannot be extrapolated with certainty to other units that remain untested. Thus, statistically sound sampling plans must be developed if valid inferences are to be drawn from observed data to characterise the level of particulate contamination in a large group of units.

METHOD 1. LIGHT OBSCURATION PARTICLE COUNT TEST

Use a suitable apparatus based on the principle of light blockage which allows an automatic determination of the size of particles and the number of particles according to size.

The apparatus is calibrated using suitable certified reference materials consisting of dispersions of spherical particles of known sizes between 10 µm and 25 µm. These standard particles are dispersed in *particle-free water R*. Care must be taken to avoid aggregation of particles during dispersion.

General precautions

The test is carried out under conditions limiting particulate contamination, preferably in a laminar-flow cabinet.

Very carefully wash the glassware and filtration equipment used, except for the membrane filters, with a warm detergent solution and rinse with abundant amounts of water to remove all traces of detergent. Immediately before use, rinse the equipment from top to bottom, outside and then inside, with *particle-free water R*.

Take care not to introduce air bubbles into the preparation to be examined, especially when fractions of the preparation are being transferred to the container in which the determination is to be carried out.

In order to check that the environment is suitable for the test, that the glassware is properly cleaned and that the water to be used is particle-free, the following test is carried out: determine the particulate contamination of 5 samples of *particle-free water R*, each of 5 mL, according to the method described below. If the number of particles of 10 µm or greater size exceeds 25 for the combined 25 mL, the precautions taken for the test are not sufficient. The preparatory steps must be repeated until the environment, glassware and water are suitable for the test.

Method

Mix the contents of the sample by slowly inverting the container 20 times successively. If necessary, cautiously remove the sealing closure. Clean the outer surfaces of the container opening using a jet of *particle-free water R* and remove the closure, avoiding any contamination of the contents. Eliminate gas bubbles by appropriate measures such as allowing to stand for 2 min or sonicating.

For large-volume parenterals, single units are tested. For small-volume parenterals less than 25 mL in volume, the contents of 10 or more units are combined in a cleaned container to obtain a volume of not less than 25 mL; where justified and authorised, the test solution may be prepared by mixing the contents of a suitable number of vials and diluting to 25 mL with *particle-free water R* or with an appropriate solvent without contamination of particles when *particle-free water R* is not suitable. Small-volume parenterals having a volume of 25 mL or more may be tested individually.

Powders for parenteral administration are reconstituted with *particle-free water R* or with an appropriate solvent without contamination of particles when *particle-free water R* is not suitable.

The number of test specimens must be adequate to provide a statistically sound assessment. For large-volume parenterals or for small-volume parenterals having a volume of 25 mL or more, fewer than 10 units may be tested, based on an appropriate sampling plan.

Remove 4 portions, each of not less than 5 mL, and count the number of particles equal to or greater than 10 µm and 25 µm. Disregard the result obtained for the first portion, and calculate the mean number of particles for the preparation to be examined.

Evaluation

For preparations supplied in containers with a nominal volume of more than 100 mL, apply the criteria of test 1.A.

For preparations supplied in containers with a nominal volume of less than 100 mL, apply the criteria of test 1.B.

♦For preparations supplied in containers with a nominal volume of 100 mL, apply the criteria of test 1.B.♦

If the average number of particles exceeds the limits, test the preparation by the microscopic particle count test.

Test 1.A – Solutions for infusion or solutions for injection supplied in containers with a nominal content of more than 100 mL

The preparation complies with the test if the average number of particles present in the units tested does not exceed 25 per millilitre equal to or greater than 10 µm and does not exceed 3 per millilitre equal to or greater than 25 µm.

Test 1.B – Solutions for infusion or solutions for injection supplied in containers with a nominal content of less than 100 mL

The preparation complies with the test if the average number of particles present in the units tested does not exceed 6000 per container equal to or greater than 10 µm and does not exceed 600 per container equal to or greater than 25 µm.

METHOD 2. MICROSCOPIC PARTICLE COUNT TEST

Use a suitable binocular microscope, filter assembly for retaining particulate contamination and membrane filter for examination.

The microscope is equipped with an ocular micrometer calibrated with an objective micrometer, a mechanical stage capable of holding and traversing the entire filtration area

(8) This chapter has undergone pharmacopoeial harmonisation. See chapter *5.8. Pharmacopoeial harmonisation*.

of the membrane filter, 2 suitable illuminators to provide episcopic illumination in addition to oblique illumination, and is adjusted to 100 ± 10 magnifications.

The ocular micrometer is a circular diameter graticule (see Figure 2.9.19.-1.) and consists of a large circle divided by crosshairs into quadrants, transparent and black reference circles 10 µm and 25 µm in diameter at 100 magnifications, and a linear scale graduated in 10 µm increments. It is calibrated using a stage micrometer that is certified by either a domestic or international standard institution. A relative error of the linear scale of the graticule within ± 2 per cent is acceptable. The large circle is designated the graticule field of view (GFOV).

2 illuminators are required. One is an episcopic brightfield illuminator internal to the microscope, the other is an external, focusable auxiliary illuminator adjustable to give reflected oblique illumination at an angle of 10-20°.

The filter assembly for retaining particulate contamination consists of a filter holder made of glass or other suitable material, and is equipped with a vacuum source and a suitable membrane filter.

The membrane filter is of suitable size, black or dark grey in colour, non-gridded or gridded, and 1.0 µm or finer in nominal pore size.

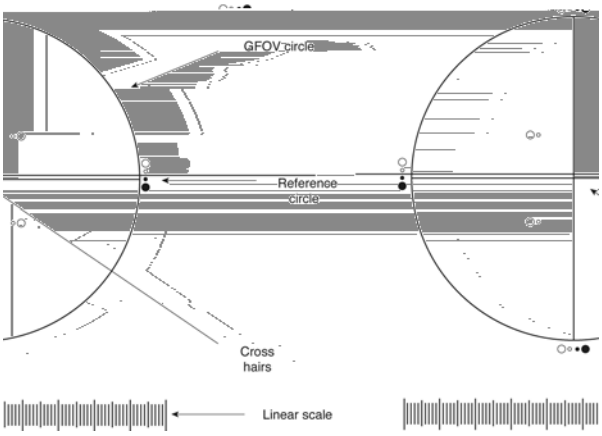

Figure 2.9.19.-1. – *Circular diameter graticule*

General precautions

The test is carried out under conditions limiting particulate contamination, preferably in a laminar-flow cabinet.

Very carefully wash the glassware and filter assembly used, except for the membrane filter, with a warm detergent solution and rinse with abundant amounts of water to remove all traces of detergent. Immediately before use, rinse both sides of the membrane filter and the equipment from top to bottom, outside and then inside, with *particle-free water R*.

In order to check that the environment is suitable for the test, that the glassware and the membrane filter are properly cleaned and that the water to be used is particle-free, the following test is carried out: determine the particulate contamination of a 50 mL volume of *particle-free water R* according to the method described below. If more than 20 particles 10 µm or larger in size or if more than 5 particles 25 µm or larger in size are present within the filtration area, the precautions taken for the test are not sufficient. The preparatory steps must be repeated until the environment, glassware, membrane filter and water are suitable for the test.

Method

Mix the contents of the samples by slowly inverting the container 20 times successively. If necessary, cautiously remove the sealing closure. Clean the outer surfaces of the container opening using a jet of *particle-free water R* and remove the closure, avoiding any contamination of the contents.

For large-volume parenterals, single units are tested. For small-volume parenterals less than 25 mL in volume, the contents of 10 or more units are combined in a cleaned container; where justified and authorised, the test solution may be prepared by mixing the contents of a suitable number of vials and diluting to 25 mL with *particle-free water R* or with an appropriate solvent without contamination of particles when *particle-free water R* is not suitable. Small-volume parenterals having a volume of 25 mL or more may be tested individually.

Powders for parenteral administration are constituted with *particle-free water R* or with an appropriate solvent without contamination of particles when *particle-free water R* is not suitable.

The number of test specimens must be adequate to provide a statistically sound assessment. For large-volume parenterals or for small-volume parenterals having a volume of 25 mL or more, fewer than 10 units may be tested, based on an appropriate sampling plan.

Wet the inside of the filter holder fitted with the membrane filter with several millilitres of *particle-free water R*. Transfer to the filtration funnel the total volume of a solution pool or of a single unit, and apply vacuum. If needed, add stepwise a portion of the solution until the entire volume is filtered. After the last addition of solution, begin rinsing the inner walls of the filter holder by using a jet of *particle-free water R*. Maintain the vacuum until the surface of the membrane filter is free from liquid. Place the filter in a Petri dish and allow the filter to air-dry with the cover slightly ajar. After the filter has been dried, place the Petri dish on the stage of the microscope, scan the entire membrane filter under the reflected light from the illuminating device, and count the number of particles that are equal to or greater than 10 µm and the number of particles that are equal to or greater than 25 µm. Alternatively, partial filter count and determination of the total filter count by calculation is allowed. Calculate the mean number of particles for the preparation to be examined.

The particle sizing process with the use of the circular diameter graticule is carried out by transforming mentally the image of each particle into a circle and then comparing it to the 10 µm and 25 µm graticule reference circles. Thereby the particles are not moved from their initial locations within the graticule field of view and are not superimposed on the reference circles for comparison. The inner diameter of the transparent graticule reference circles is used to size white and transparent particles, while dark particles are sized by using the outer diameter of the black opaque graticule reference circles.

In performing the microscopic particle count test do not attempt to size or enumerate amorphous, semi-liquid, or otherwise morphologically indistinct materials that have the appearance of a stain or discoloration on the membrane filter. These materials show little or no surface relief and present a gelatinous or film-like appearance. In such cases the interpretation of enumeration may be aided by testing a sample of the solution by the light obscuration particle count test.

Evaluation

For preparations supplied in containers with a nominal volume of more than 100 mL, apply the criteria of test 2.A.

For preparations supplied in containers with a nominal volume of less than 100 mL, apply the criteria of test 2.B.

♦For preparations supplied in containers with a nominal volume of 100 mL, apply the criteria of test 2.B.♦

Test 2.A – Solutions for infusion or solutions for injection supplied in containers with a nominal content of more than 100 mL

The preparation complies with the test if the average number of particles present in the units tested does not exceed 12 per millilitre equal to or greater than 10 µm and does not exceed 2 per millilitre equal to or greater than 25 µm.

Test 2.B – Solutions for infusion or solutions for injection supplied in containers with a nominal content of less than 100 mL

The preparation complies with the test if the average number of particles present in the units tested does not exceed 3000 per container equal to or greater than 10 µm and does not exceed 300 per container equal to or greater than 25 µm.

01/2008:20920

2.9.20. PARTICULATE CONTAMINATION: VISIBLE PARTICLES

Particulate contamination of injections and infusions consists of extraneous, mobile undissolved particles, other than gas bubbles, unintentionally present in the solutions.

The test is intended to provide a simple procedure for the visual assessment of the quality of parenteral solutions as regards visible particles. Other validated methods may be used.

APPARATUS

The apparatus (see Figure 2.9.20.-1) consists of a viewing station comprising:

- a matt black panel of appropriate size held in a vertical position,
- a non-glare white panel of appropriate size held in a vertical position next to the black panel,
- an adjustable lampholder fitted with a suitable, shaded, white-light source and with a suitable light diffuser (a viewing illuminator containing two 13 W fluorescent tubes, each 525 mm in length, is suitable). The intensity of illumination at the viewing point is maintained between 2000 lux and 3750 lux, although higher values are preferable for coloured glass and plastic containers.

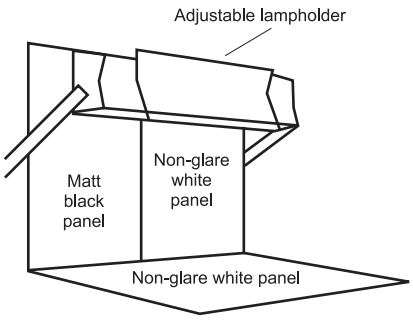

Figure 2.9.20.-1. – *Apparatus for visible particles*

METHOD

Remove any adherent labels from the container and wash and dry the outside. Gently swirl or invert the container, ensuring that air bubbles are not introduced, and observe for about 5 s in front of the white panel. Repeat the procedure in front of the black panel. Record the presence of any particles.

01/2008:20922

2.9.22. SOFTENING TIME DETERMINATION OF LIPOPHILIC SUPPOSITORIES

The test is intended to determine, under defined conditions, the time which elapses until a suppository maintained in water softens to the extent that it no longer offers resistance when a defined weight is applied.

APPARATUS A

The apparatus (see Figure 2.9.22.-1) consists of a glass tube 15.5 mm in internal diameter with a flat bottom and a length of about 140 mm. The tube is closed by a removable plastic cover having an opening 5.2 mm in diameter. The apparatus comprises a rod 5.0 mm in diameter which becomes wider towards the lower end, reaching a diameter of 12 mm. A metal needle 2 mm in length and 1 mm in diameter is fixed on the flat underside.

The rod consists of 2 parts, a lower part made of plastic material and an upper part made of plastic material or metal with a weight disk. The upper and lower parts are either fitted together (manual version) or separate (automated version). The weight of the entire rod is 30 ± 0.4 g. The upper part of the rod carries a sliding mark ring. When the rod is introduced into the glass tube so that it touches the bottom, the mark ring is adjusted to coincide with the upper level of the plastic cover.

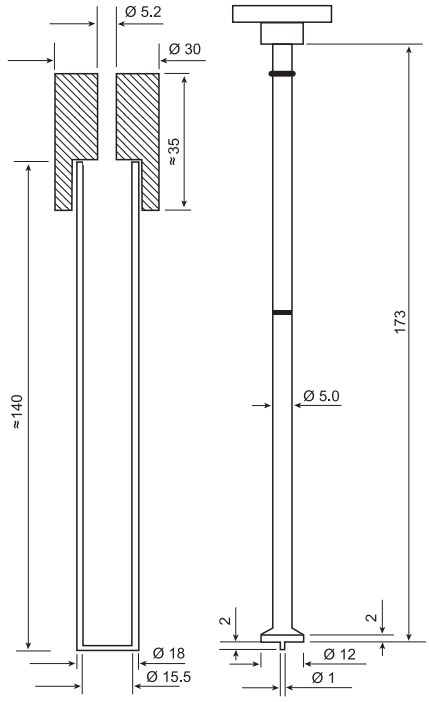

Figure 2.9.22.-1. – *Apparatus A for measuring the softening time of lipophilic suppositories*

Dimensions in millimetres

Method. Place the glass tube containing 10 mL of water in a water-bath and equilibrate at 36.5 ± 0.5 °C. Fix the glass tube vertically and immerse to a depth of at least 7 cm below the surface but without touching the bottom of the water-bath. Introduce a suppository, tip first, into the tube followed by the rod with the free gliding plastic cover into the glass tube until the metal needle touches the flat end of the suppository. Put the cover on the tube (beginning of time measurement). Note the time which elapses until the rod sinks down to the bottom of the glass tube and the mark ring reaches the upper level of the plastic cover.

APPARATUS B

The apparatus (see Figure 2.9.22.-2) consists of a water-bath (B) into which an inner tube (A) is inserted and fixed with a stopper. The inner tube is closed by a stopper at the bottom. The apparatus is fitted with a thermometer. 2 insets are available:

- a glass rod (C1) in the form of a tube sealed at both ends, carrying a rim at its lower end weighed with lead shot, which has a weight of 30 ± 0.4 g,
- a penetration inset (C2) consisting of a rod (7.5 ± 0.1 g) in a tube which has an enlargement for the suppository, both made of stainless steel.

Method. Pour 5 mL of water at 36.5 ± 0.5 °C into the inner tube (A), introduce a suppository with the tip downwards and onto that, place the inset (C1 or C2). Note the time which elapses between this moment and the moment when the lower, rimmed end of the glass rod (C1) or the steel rod (C2) reaches the narrowed part of the inner glass tube. Melting or dissolution is then considered as complete.

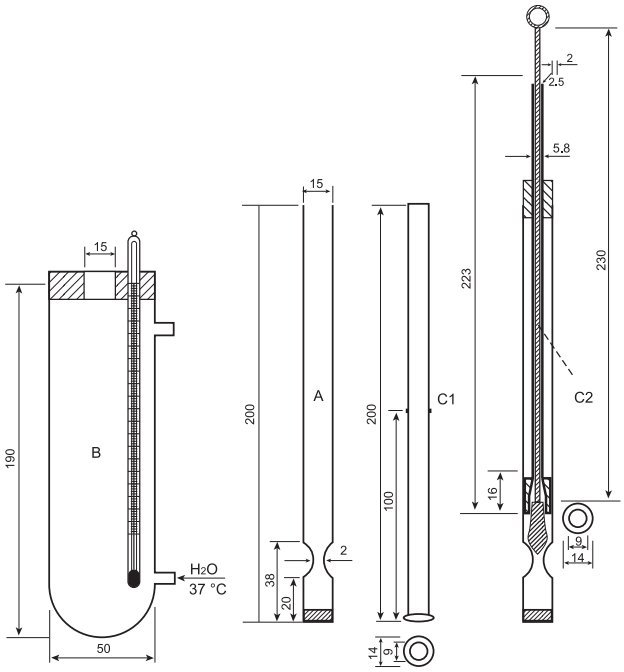

Figure 2.9.22.-2. – *Apparatus B for measuring the softening time of lipophilic suppositories*

Dimensions in millimetres

07/2008:20923

2.9.23. GAS PYCNOMETRIC DENSITY OF SOLIDS

Gas pycnometric density is determined by measuring the volume occupied by a known mass of powder, which is equivalent to the volume of gas displaced by the powder using a gas displacement pycnometer. In gas pycnometric density measurements, the volume determined excludes the volume occupied by open pores; however, it includes the volume occupied by sealed pores or pores inaccessible to the gas.

Usually, helium is used as a test gas due to its high diffusivity into small open pores. If gases other than helium are used, different values would be obtained, since the penetration of the gas is dependent on the size of the pore as well as the cross-sectional area of the gas molecules.

The measured density is a volume-weighted average of the densities of individual powder particles. It is called the particle density, distinct from the true density of a solid or the bulk density of a powder. The density of solids is expressed in grams per cubic centimetre (g/cm^3), although the International Unit is the kilogram per cubic metre (1 g/cm^3 = 1000 kg/m^3).

APPARATUS

The apparatus (see Figure 2.9.23.-1) consists of the following:

- a sealed test cell, with empty cell volume V_c, connected through a valve to an expansion cell, with volume V_r;
- a system capable of pressurising the test cell with the measurement gas until a defined pressure (P) indicated by a manometer;
- the system is connected to a source of measurement gas, preferably helium, unless another gas is specified.

The gas pycnometric density measurement is performed at a temperature between 15 °C and 30 °C that does not vary by more than 2 °C during the course of measurement.

The apparatus is calibrated, which means that the volumes V_c and V_r are determined using a suitable calibration standard whose volume is known to the nearest 0.001 cm^3. The procedure described below is followed in 2 runs, firstly with an empty test cell, and secondly with the calibration standard placed in the test cell. The volumes V_c and V_r are calculated using the equation for the sample volume (V_s), taking into account that V_s is zero in the first run.

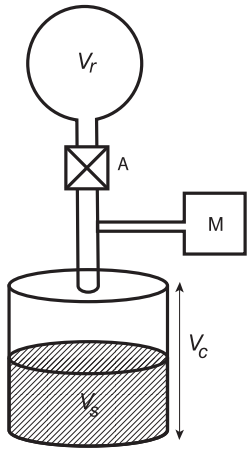

A = valve;

V_r = expansion volume, in cubic centimetres;

V_c = cell volume, in cubic centimetres;

V_s = sample volume, in cubic centimetres;

M = manometer.

Figure 2.9.23.-1. – *Schematic diagram of a gas pycnometer*

METHOD

Volatile contaminants in the powder are removed by degassing the powder under a constant purge of helium prior to the measurement. Occasionally, powders may have to be degassed under vacuum. Because volatiles may be evolved during the measurement, weighing of the sample is carried out after the pycnometric measurement of volume.

Weigh the test cell of the pycnometer and record the mass. Fill the test cell with a given mass of powder of the substance to be examined. Seal the test cell in the pycnometer. Record the system reference pressure (P_r) as indicated by the manometer while the valve that connects the expansion cell with the test cell is open. Close the valve to separate the expansion cell from the test cell. Pressurise the test cell with the gas to an initial pressure (P_i) and record the value obtained. Open the valve to connect the expansion cell with the test cell. Record the final pressure (P_f). Repeat the measurement sequence for the same powder sample until consecutive measurements of the sample volume (V_s) agree to within 0.2 per cent. Unload the test cell and measure the final powder mass (m), expressed in grams. If the pycnometer differs in operation or construction from the one shown in Figure 2.9.23.-1, follow the instructions of the manufacturer of the pycnometer.

EXPRESSION OF THE RESULTS

The sample volume (V_s) is given by the equation:

$$V_s = V_c - \frac{V_r}{\frac{P_i - P_r}{P_f - P_r} - 1}$$

The density (ρ) is given by the equation:

$$\rho = \frac{m}{V_s}$$

The sample conditioning is indicated with the results. For example, indicate whether the sample was tested as is or dried under specific conditions such as those described for loss on drying.

04/2012:20925

2.9.25. DISSOLUTION TEST FOR MEDICATED CHEWING GUMS

PRINCIPLE

The test is used to determine the dissolution rate of active substances in medicated chewing gums. This is done by applying a mechanical kneading procedure to a piece of gum placed in a small chamber designed to simulate the process of chewing.

APPARATUS A

Chewing apparatus A (Figure 2.9.25.-1) consists of:

- 1 chewing chamber;
- 1 vertical piston;
- 2 horizontal pistons with O-rings and sealing rings.

The chewing chamber consists of 4 individual parts:

- 1 central chamber;
- 1 funnel (Figure 2.9.25.-2);
- 2 guides with bushes (Figure 2.9.25.-3).

The funnel and guides are mounted on the central chamber. The O-rings are incorporated in the piston recess with the sealing ring around it; the sealing rings ensure that the chamber is watertight. The horizontal pistons are placed in the chewing chamber through the guides.

The gum is artificially chewed by the horizontal pistons, and the vertical piston ensures that the gum stays in the right place between chews.

Machine speed is controlled to ensure a constant cycle. One cycle (chew) is defined as follows: the horizontal pistons start from their outermost position, move to their innermost position then return to their outermost position. Within one cycle, the vertical piston moves from its lowest position to its uppermost position and back to its lowest position.

Each horizontal piston has a stroke of 25.0 mm. The maximum distance between these 2 pistons is 50 mm. The minimum distance between the 2 horizontal pistons is 0.1 mm to 1.0 mm. The vertical piston has a stroke of 22.0 mm.

Horizontal piston movement is controlled so that the 2 pistons are at their innermost position at the same time. Vertical piston movement is controlled so that it does not conflict with the movement of the horizontal pistons.

If necessary, the machine can be constructed so that the horizontal pistons rotate around their own axes in opposite direction to each other by the end of the chew in order to obtain maximum chewing.

All parts of the apparatus that may come into contact with the preparation or the dissolution medium are chemically inert and do not adsorb, react with or interfere with the sample.

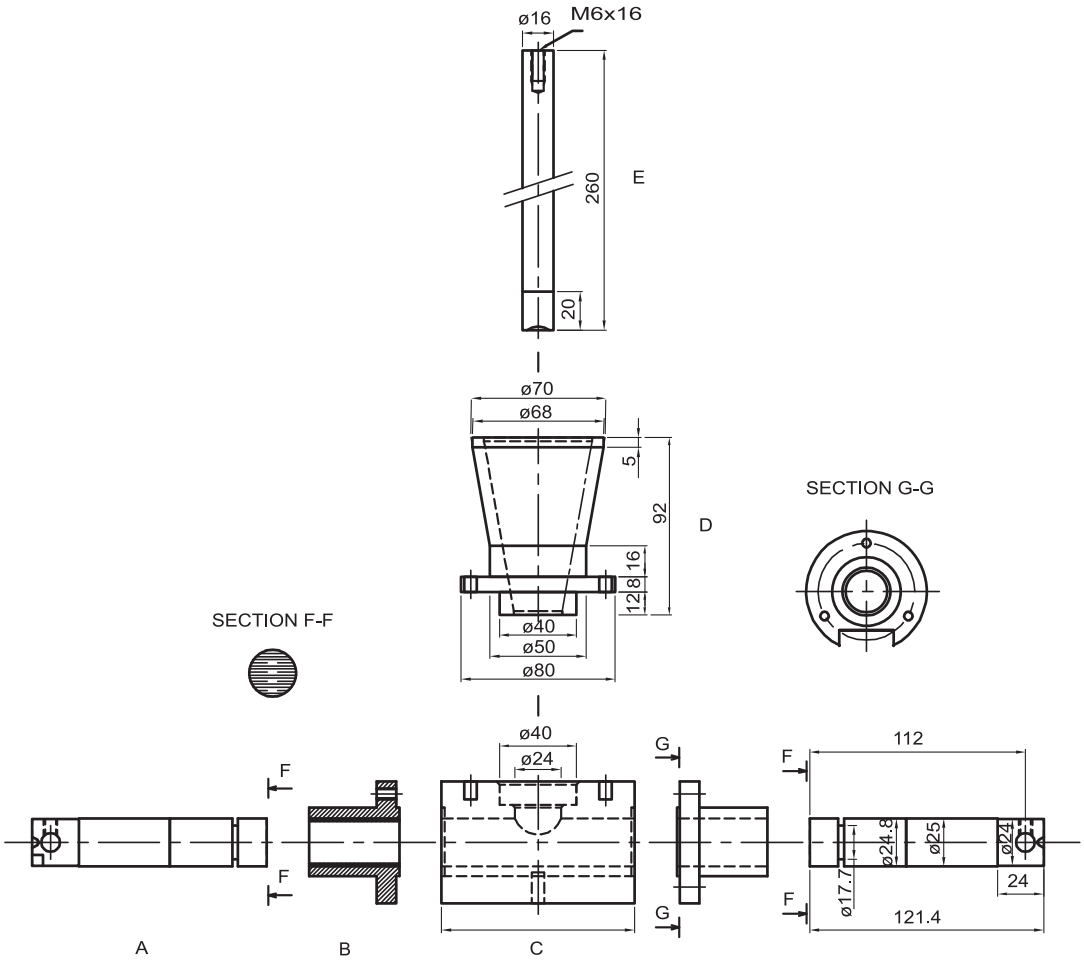

A. horizontal piston B. guide C. chewing chamber D. funnel E. vertical piston

Figure 2.9.25.-1 – *Apparatus A - Chewing chamber and pistons*
Dimensions in millimetres

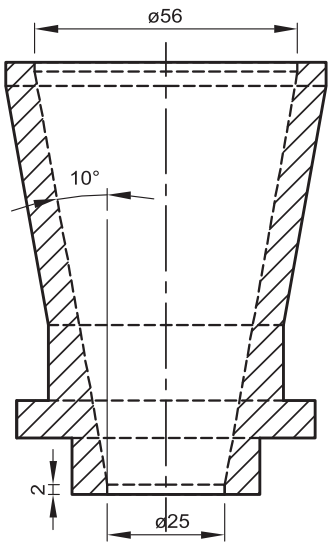

Figure 2.9.25.-2 – *Funnel*

Dimensions in millimetres

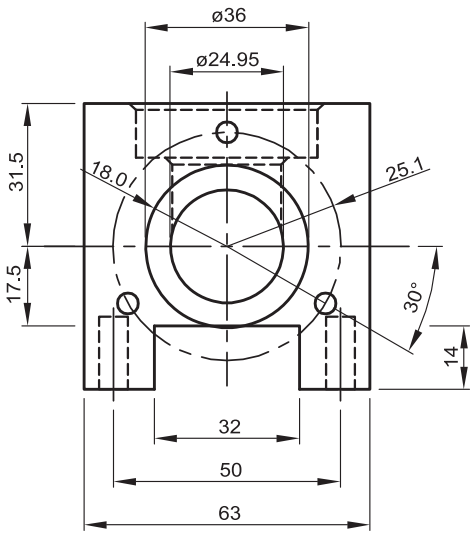

Figure 2.9.25.-3 – *Guide (section G-G)*

Dimensions in millimetres

APPARATUS B

Chewing apparatus B (Figure 2.9.25.-4) consists of:

- 1 test cell (Figure 2.9.25.-5 or 2.9.25.-6);
- 1 vertical axle with upper chewing surface (Figures 2.9.25.-7 and 2.9.25.-8);
- 1 base chamber with lower chewing surface (Figures 2.9.25.-9 and 2.9.25.-10);
- 1 device for up-and-down chewing motion;
- 1 revolving device for the vertical axle.

The gum is artificially chewed by the lower and upper chewing surfaces. Machine speed is controlled to ensure a constant cycle. The distance between the lower and upper chewing surfaces may be set up to 5 mm. The turning angle of the revolving device is about 20°.

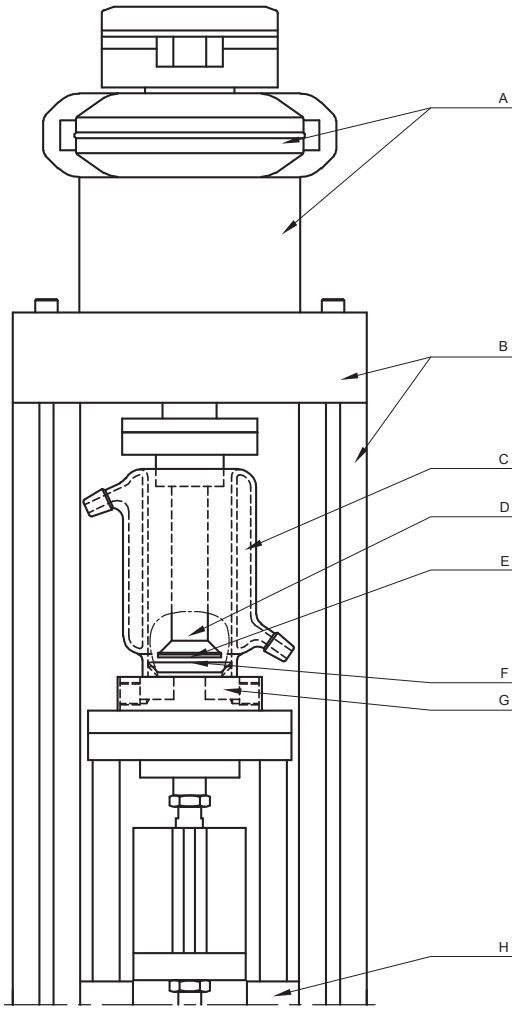

A. revolving device for the upper chewing surface	E. upper chewing surface
B. stand	F. lower chewing surface
C. test cell	G. base chamber
D. axle	H. device for up-and-down chewing motion

Figure 2.9.25.-4 – *Apparatus B*

The test cells may also be equipped with 1 or 2 glass sampling tubes, coming through the thermostatic double wall. These tubes also make it possible to have an external sink, which may be necessary to achieve sink conditions for sparingly soluble substances.

The gum is usually sandwiched between 2 circular plastic nets to prevent disintegration.

Nets made from nylon (PA6) with an aperture of 1.4 mm and a wire diameter of 0.405 mm may be used.

All parts of the apparatus that may come into contact with the preparation or the dissolution medium are chemically inert and do not adsorb, react with or interfere with the sample.

PROCEDURE

For each determination, the following information is needed:

- apparatus used (type A or type B);
- composition, volume and temperature of the dissolution medium;
- number of chews per minute;
- time and sampling method;
- whether the analysis is performed on the gum residue or on the dissolution medium;
- method of analysis.

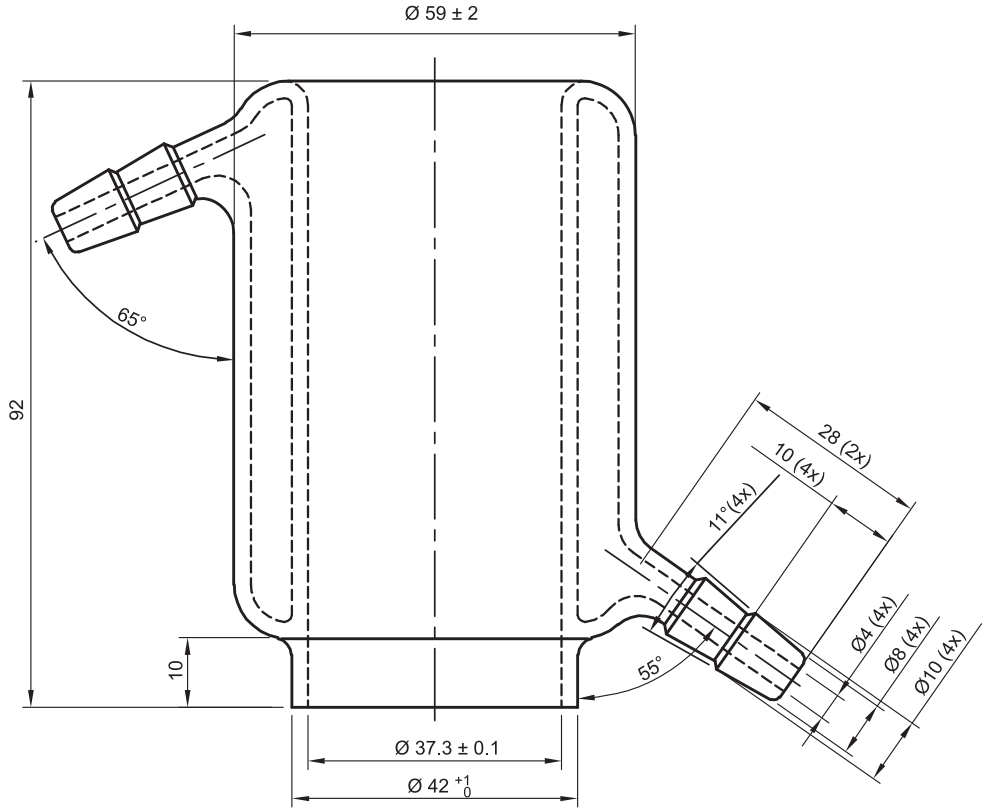

Figure 2.9.25.-5 – *Test cell*
Dimensions in millimetres

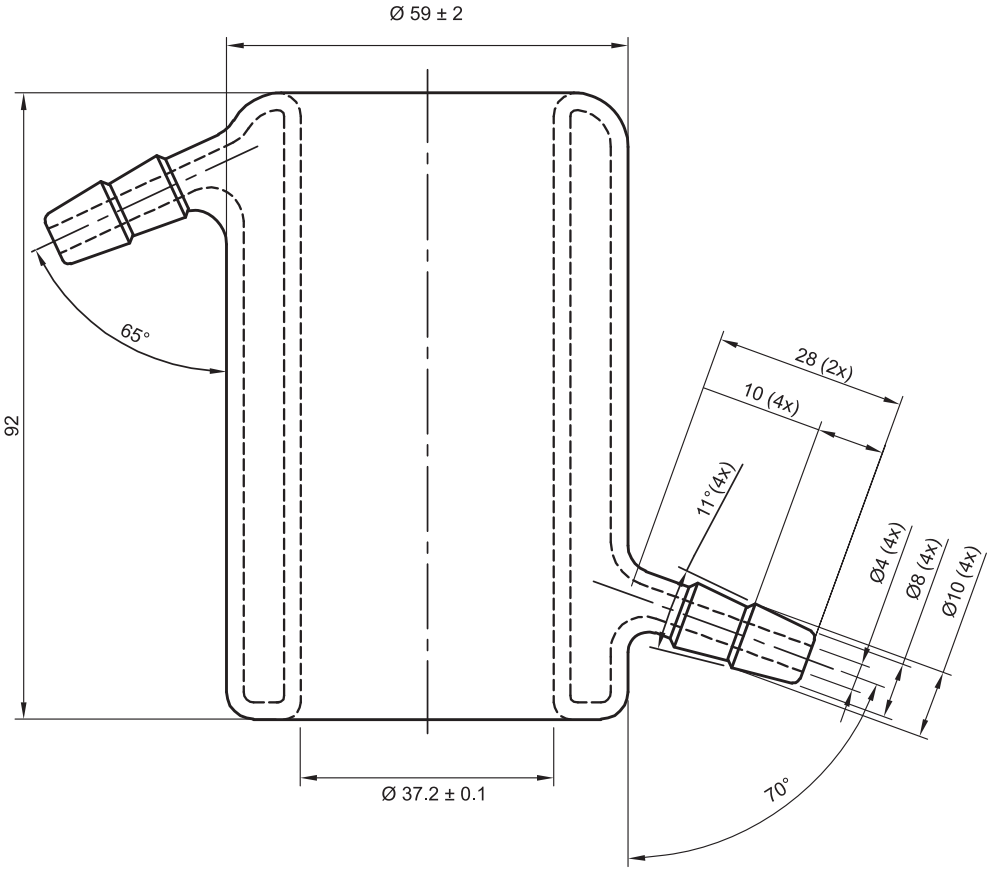

Figure 2.9.25.-6 – *Test cell (straight)*
Dimensions in millimetres

Place the prescribed volume of dissolution medium in the chewing chamber, usually 20 mL of *phosphate buffer solution pH 6.0 R2*. Maintain the medium temperature at 37 ± 0.5 °C using an electrical device with external control (apparatus A) or with a thermostat (apparatus B). Set the machine speed at the prescribed number of chews per minute (typically up to 60). Accurately weigh a portion of gum or the whole gum, put it into the chewing chamber and start the machine.

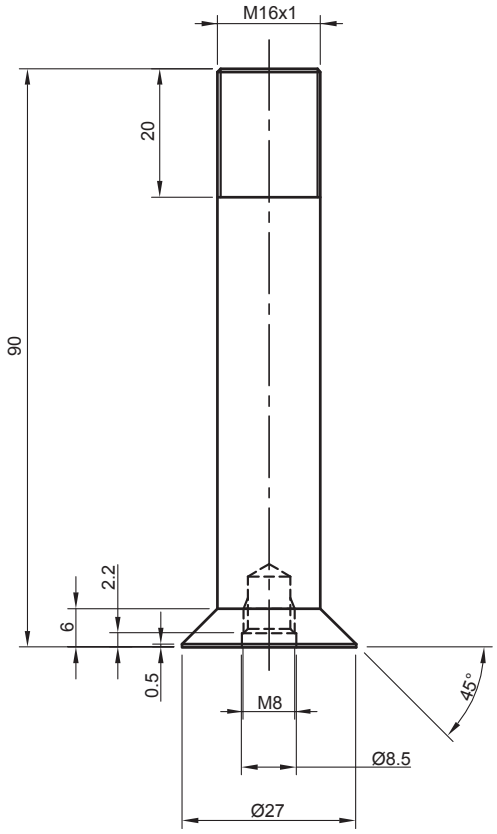

Figure 2.9.25.-7 – *Axle*

Dimensions in millimetres

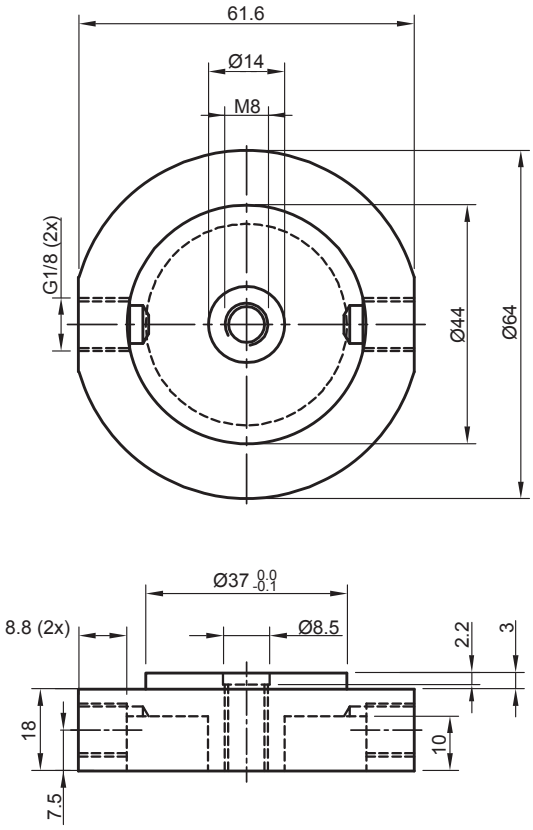

Figure 2.9.25.-9 – *Base chamber*

Dimensions in millimetres

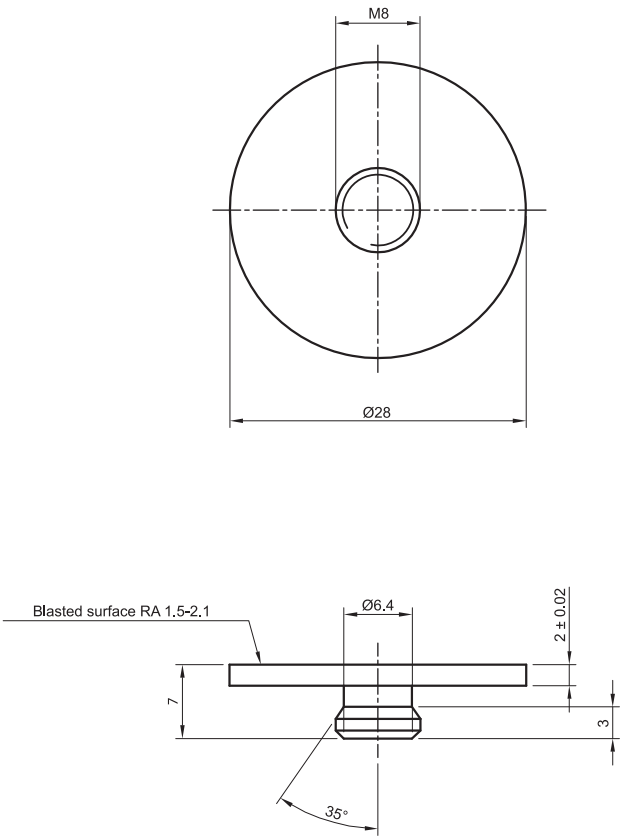

Figure 2.9.25.-8 – *Upper chewing surface*

Dimensions in millimetres

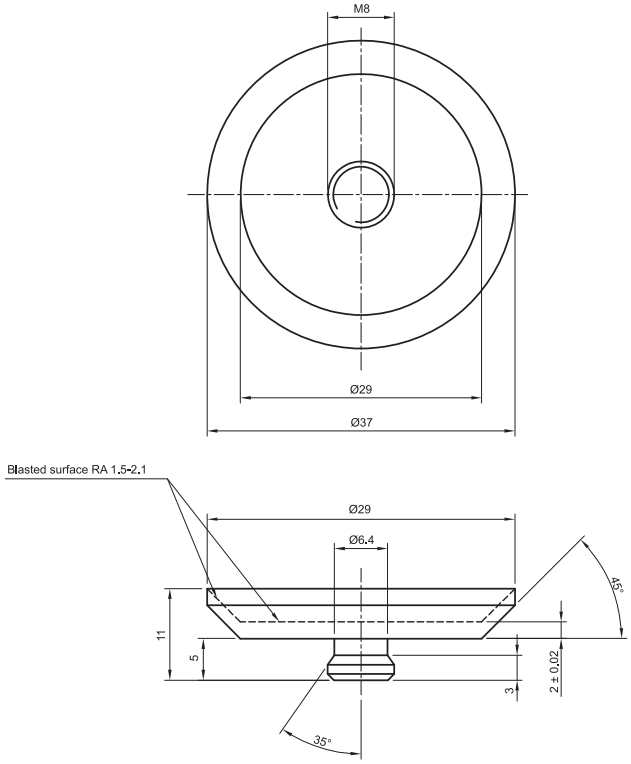

Figure 2.9.25.-10 – *Lower chewing surface*

Dimensions in millimetres

SAMPLING AND EVALUATION

Stop the apparatus at the prescribed time. Remove the gum residue and take a sample of the dissolution medium. Determine the content of active substance(s) by a suitable method. Medium replacement may be made after each sampling procedure; compensation by calculation of medium

volume change or sample dilution is needed. Alternatively, determine the content of active substance(s) remaining in the gum residue. Carry out the test successively on 6 medicated chewing gums.

The quantity of active substance(s) dissolved in a specified time is expressed as a percentage of the content stated on the label.

01/2010:20926

2.9.26. SPECIFIC SURFACE AREA BY GAS ADSORPTION[9]

INTRODUCTION

The specific surface area of a powder is determined by physical adsorption of a gas on the surface of the solid and by calculating the amount of adsorbate gas corresponding to a monomolecular layer on the surface. Physical adsorption results from relatively weak forces (van der Waals forces) between the adsorbate gas molecules and the adsorbent surface of the test powder. The determination is usually carried out at the temperature of liquid nitrogen. The amount of gas adsorbed can be measured by a volumetric or continuous flow procedure.

BRUNAUER, EMMETT AND TELLER (BET) THEORY AND SPECIFIC SURFACE AREA DETERMINATION

MULTI-POINT MEASUREMENT

The data are treated according to the Brunauer, Emmett and Teller (BET) adsorption isotherm equation:

$$\frac{1}{\left[V_a\left(\frac{P_o}{P}-1\right)\right]} = \frac{C-1}{V_m C} \times \frac{P}{P_o} + \frac{1}{V_m C} \qquad (1)$$

P = partial vapour pressure of adsorbate gas in equilibrium with the surface at 77.4 K (b.p. of liquid nitrogen), in pascals,

P_o = saturated pressure of adsorbate gas, in pascals,

V_a = volume of gas adsorbed at standard temperature and pressure (STP) [273.15 K and atmospheric pressure (1.013×10^5 Pa)], in millilitres,

V_m = volume of gas adsorbed at STP to produce an apparent monolayer on the sample surface, in millilitres,

C = dimensionless constant that is related to the enthalpy of adsorption of the adsorbate gas on the powder sample.

A value of V_a is measured at each of not less than 3 values of P/P_o.

Then the BET value

$$\frac{1}{\left[V_a\left(\frac{P_o}{P}-1\right)\right]}$$

is plotted against P/P_o according to equation (1). This plot should yield a straight line usually in the approximate relative pressure range 0.05 to 0.3. The data are considered acceptable if the correlation coefficient, r, of the linear regression is not less than 0.9975; that is, r^2 is not less than 0.995. From the resulting linear plot, the slope, which is equal to $(C-1)/V_mC$, and the intercept, which is equal to $1/V_mC$, are evaluated by linear regression analysis. From these values, V_m is calculated as 1/(*slope* + *intercept*), while C is calculated as (*slope/intercept*) + 1. From the value of V_m so determined, the specific surface area, S, in $m^2 \cdot g^{-1}$, is calculated by the equation:

$$S = \frac{V_m N a}{m \times 22400} \qquad (2)$$

N = Avogadro constant (6.022×10^{23} mol^{-1}),

a = effective cross-sectional area of one adsorbate molecule, in square metres (0.162 nm^2 for nitrogen and 0.195 nm^2 for krypton),

m = mass of test powder, in grams,

22400 = volume occupied by 1 mole of the adsorbate gas at STP allowing for minor departures from the ideal, in millilitres.

A minimum of 3 data points is required. Additional measurements may be carried out, especially when non-linearity is obtained at a P/P_o value close to 0.3. Because non-linearity is often obtained at a P/P_o value below 0.05, values in this region are not recommended. The test for linearity, the treatment of the data, and the calculation of the specific surface area of the sample are described above.

SINGLE-POINT MEASUREMENT

Normally, at least 3 measurements of V_a each at different values of P/P_o are required for the determination of specific surface area by the dynamic flow gas adsorption technique (*Method I*) or by volumetric gas adsorption (*Method II*). However, under certain circumstances described below, it may be acceptable to determine the specific surface area of a powder from a single value of V_a measured at a single value of P/P_o such as 0.300 (corresponding to 0.300 mole of nitrogen or 0.001038 mole fraction of krypton), using the following equation for calculating V_m:

$$V_m = V_a\left(1-\frac{P}{P_o}\right) \qquad (3)$$

The specific surface area is then calculated from the value of V_m by equation (2) given above.

The single-point method may be employed directly for a series of powder samples of a given material for which the material constant C is much greater than unity. These circumstances may be verified by comparing values of specific surface area determined by the single-point method with that determined by the multiple-point method for the series of powder samples. Close similarity between the single-point values and multiple-point values suggests that $1/C$ approaches zero.

The single-point method may be employed indirectly for a series of very similar powder samples of a given material for which the material constant C is not infinite but may be assumed to be invariant. Under these circumstances, the error associated with the single-point method can be reduced or eliminated by using the multiple-point method to evaluate C for one of the samples of the series from the BET plot, from which C is calculated as (1 + *slope/intercept*). Then V_m is calculated from the single value of V_a measured at a single value of P/P_o by the equation:

$$V_m = V_a\left(\frac{P_o}{P}-1\right)\left[\frac{1}{C}+\frac{C-1}{C}\times\left(\frac{P}{P_o}\right)\right] \qquad (4)$$

The specific surface area is calculated from V_m by equation (2) given above.

EXPERIMENTAL TECHNIQUES

This section describes the methods to be used for the sample preparation, the dynamic flow gas adsorption technique (*Method I*) and the volumetric gas adsorption technique (*Method II*).

(9) This chapter has undergone pharmacopoeial harmonisation. See chapter *5.8. Pharmacopoeial harmonisation*.

SAMPLE PREPARATION

Outgassing

Before the specific surface area of the sample can be determined, it is necessary to remove gases and vapours that may have become physically adsorbed onto the surface after manufacture and during treatment, handling and storage. If outgassing is not achieved, the specific surface area may be reduced or may be variable because an intermediate area of the surface is covered with molecules of the previously adsorbed gases or vapours. The outgassing conditions are critical for obtaining the required precision and accuracy of specific surface area measurements on pharmaceuticals because of the sensitivity of the surface of the materials.

Conditions. The outgassing conditions must be demonstrated to yield reproducible BET plots, a constant weight of test powder, and no detectable physical or chemical changes in the test powder.

The outgassing conditions defined by the temperature, pressure and time should be chosen so that the original surface of the solid is reproduced as closely as possible. Outgassing of many substances is often achieved by applying a vacuum, by purging the sample in a flowing stream of a non-reactive, dry gas, or by applying a desorption-adsorption cycling method. In either case, elevated temperatures are sometimes applied to increase the rate at which the contaminants leave the surface. Caution should be exercised when outgassing powder samples using elevated temperatures to avoid affecting the nature of the surface and the integrity of the sample.

If heating is employed, the recommended temperature and time of outgassing are as low as possible to achieve reproducible measurement of specific surface area in an acceptable time. For outgassing sensitive samples, other outgassing methods such as the desorption-adsorption cycling method may be employed.

Adsorbate

The standard technique is the adsorption of nitrogen of analytical quality at liquid nitrogen temperature.

For powders of low specific surface area (< 0.2 $m^2 \cdot g^{-1}$) the proportion adsorbed is low. In such cases the use of krypton at liquid nitrogen temperature is preferred because the low vapour pressure exerted by this gas greatly reduces error. The use of larger sample quantities where feasible (equivalent to 1 m^2 or greater total surface area using nitrogen) may compensate for the errors in determining low surface areas.

All gases used must be free from moisture.

Quantity of sample

Accurately weigh a quantity of the test powder such that the total surface of the sample is at least 1 m^2 when the adsorbate is nitrogen and 0.5 m^2 when the adsorbate is krypton.

Lower quantities of sample may be used after appropriate validation.

MEASUREMENTS

Because the amount of gas adsorbed under a given pressure tends to increase on decreasing the temperature, adsorption measurements are usually made at a low temperature. Measurement is performed at 77.4 K, the boiling point of liquid nitrogen.

Method I: the dynamic flow method

Principle

In the dynamic flow method (see Figure 2.9.26.-1), the recommended adsorbate gas is dry nitrogen or krypton, while helium is employed as a diluent gas, which is not adsorbed under the recommended conditions.

A minimum of 3 mixtures of the appropriate adsorbate gas with helium are required within the P/P_o range 0.05 to 0.30.

The gas detector-integrator should provide a signal that is approximately proportional to the volume of the gas passing through it under defined conditions of temperature and pressure. For this purpose, a thermal conductivity detector with an electronic integrator is one among various suitable types. A minimum of 3 data points within the recommended range of 0.05 to 0.30 for P/P_o is to be determined.

Procedure

A known mixture of the gases, usually nitrogen and helium, is passed through a thermal conductivity cell, through the sample, again through the thermal conductivity cell and then to a recording potentiometer.

Immerse the sample cell in liquid nitrogen, then the sample adsorbs nitrogen from the mobile phase. This unbalances the thermal conductivity cell, and a pulse is generated on a recorder chart.

Remove from the coolant; this gives a desorption peak equal in area and in the opposite direction to the adsorption peak. Since this is better defined than the adsorption peak, it is the one used for the determination.

To effect the calibration, inject a known quantity of adsorbate into the system, sufficient to give a peak of similar magnitude to the desorption peak and obtain the proportion of gas volume per unit peak area.

Use a nitrogen/helium mixture for a single-point determination and several such mixtures or premixing 2 streams of gas for a multiple-point determination.

Calculation is essentially the same as for the volumetric method.

Method II: the volumetric method

Principle

In the volumetric method (see Figure 2.9.26.-2), the recommended adsorbate gas is nitrogen which is admitted into the evacuated space above the previously outgassed powder sample to give a defined equilibrium pressure, P, of the gas. The use of a diluent gas, such as helium, is therefore unnecessary, although helium may be employed for other purposes, such as to measure the dead volume.

Since only pure adsorbate gas, instead of a gas mixture, is employed, interfering effects of thermal diffusion are avoided in this method.

Procedure

Admit a small amount of dry nitrogen into the sample tube to prevent contamination of the clean surface, remove the sample tube, insert the stopper, and weigh it. Calculate the weight of the sample. Attach the sample tube to the volumetric apparatus. Cautiously evacuate the sample down to the specified pressure (e.g. between 2 Pa and 10 Pa). Alternatively, some instruments operate by evacuating to a defined rate of pressure change (e.g. less than 13 Pa/30 s) and holding for a defined period of time before commencing the next step.

If the principle of operation of the instrument requires the determination of the dead volume in the sample tube, for example, by the admission of a non-adsorbed gas, such as helium, this procedure is carried out at this point, followed by evacuation of the sample. The determination of dead volume may be avoided using difference measurements, that is, by means of reference and sample tubes connected by a differential transducer. The adsorption of nitrogen gas is then measured as described below.

Raise a Dewar vessel containing liquid nitrogen at 77.4 K up to a defined point on the sample cell. Admit a sufficient volume of adsorbate gas to give the lowest desired relative pressure. Measure the volume adsorbed, V_a. For multipoint measurements, repeat the measurement of V_a at successively higher P/P_o values. When nitrogen is used as the adsorbate gas, P/P_o values of 0.10, 0.20, and 0.30 are often suitable.

REFERENCE MATERIALS

Periodically verify the functioning of the apparatus using appropriate reference materials of known surface area, such as α-alumina, which should have a specific surface area similar to that of the sample to be examined.

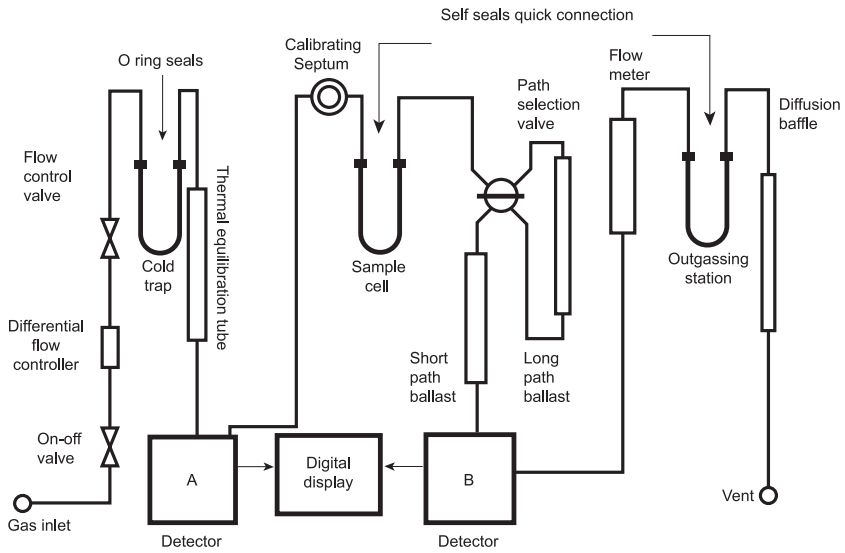

Figure 2.9.26.-1. – *Schematic diagram of the dynamic flow method apparatus*

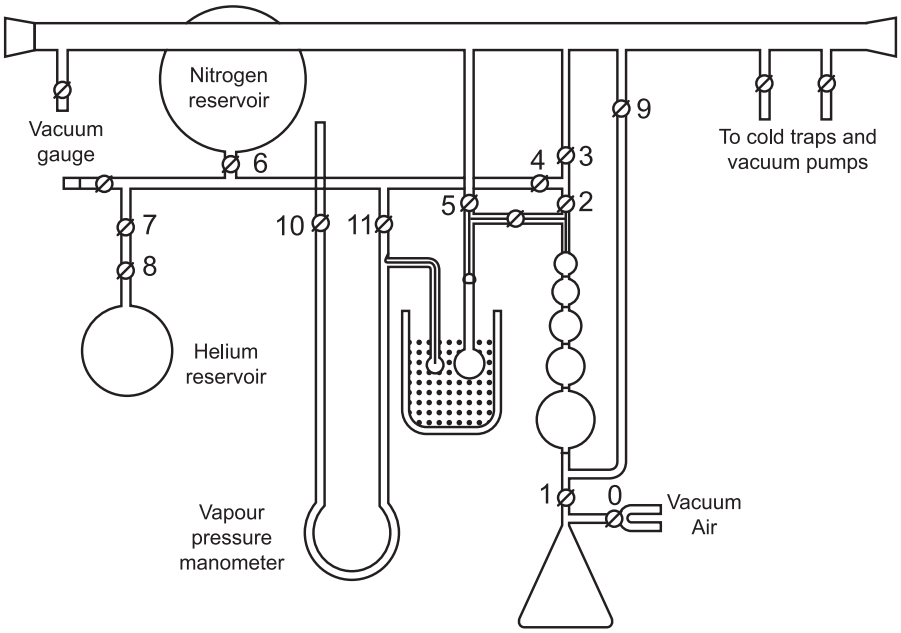

Figure 2.9.26.-2. – *Schematic diagram of the volumetric method apparatus*

01/2008:20927

2.9.27. UNIFORMITY OF MASS OF DELIVERED DOSES FROM MULTIDOSE CONTAINERS

The following test is intended for oral dosage forms such as granules, powders for oral use and liquids for oral use, which are supplied in multidose containers provided at manufacture with a measuring device.

Weigh individually 20 doses taken at random from one or more containers with the measuring device provided and determine the individual and average masses. Not more than 2 of the individual masses deviate from the average mass by more than 10 per cent and none deviates by more than 20 per cent.

01/2008:20929

2.9.29. INTRINSIC DISSOLUTION

The test is intended to determine the intrinsic dissolution rate of pure solid substances following compaction. It is carried out under specified experimental conditions such that a practical measure of the intrinsic dissolution rate is obtained.

The intrinsic dissolution rate is a theoretical value referring to pure solid substances having null porosity, but, practically, intrinsic dissolution rate is determined on substances having a minimal porosity.

PRINCIPLE

The intrinsic dissolution rate is defined as the dissolution rate of pure substances following compaction under the condition of constant surface area. Its assessment is useful in the characterisation of active substances and excipients.

The dissolution rate of pure substances can be affected by all the solid state properties such as crystal habit, crystallinity, amorphism, polymorphism, pseudo-polymorphism, particle size and specific surface area. In addition, it can also be

influenced by extrinsic factors (test conditions), such as hydrodynamics, temperature, viscosity, pH, buffer strength and ionic strength of the dissolution medium.

The assessment of intrinsic dissolution rate of a solid substance involves the preparation of a compact. Assurance of appropriate compaction properties of the powder to be tested is needed prior to performing the test.

The intrinsic dissolution rate is determined by exposing a constant area of the compacted substance to an appropriate dissolution medium, while maintaining constant stirring rate, temperature, ionic strength and pH.

The intrinsic dissolution rate is expressed in terms of dissolved mass of substance per time per exposed area, typically in milligrams per minute per square centimetre ($mg \cdot min^{-1} \cdot cm^{-2}$).

APPARATUS

A typical apparatus consists of a punch and die fabricated out of hardened steel. The base of the die has 3 threaded holes for the attachment of a surface plate made of polished steel, providing a mirror-smooth base for the compact. The die has a 0.1-1.0 cm diameter cavity into which a measured amount of the powder to be tested is placed. The punch is then inserted in the die cavity and the material is compressed, generally using a benchtop hydraulic press. A hole through the head of the punch allows insertion of a metal rod to facilitate removal from the die after the test. A compact is formed in the cavity with a single face of defined area exposed on the bottom of the die (Figure 2.9.29.-1). The bottom of the die cavity is threaded so that at least 50-75 per cent of the compact can dissolve without falling out of the die. The top of the die has a threaded shoulder that allows it to be attached to a holder. The holder is mounted on a laboratory stirring device, and the entire die, with the compact still in place, is immersed in the dissolution medium and rotated by the stirring device.

PROCEDURE

Weigh the material onto a piece of weighing paper. Attach the surface plate to the underside of the die, and secure it with the 3 provided screws. Transfer the sample of powder tested into the die cavity. Place the punch into the chamber, and secure the metal plate on the top of the assembly. Compress the powder using a hydraulic press by applying a suitable pressure for a sufficient dwell time to ensure a stable compact with

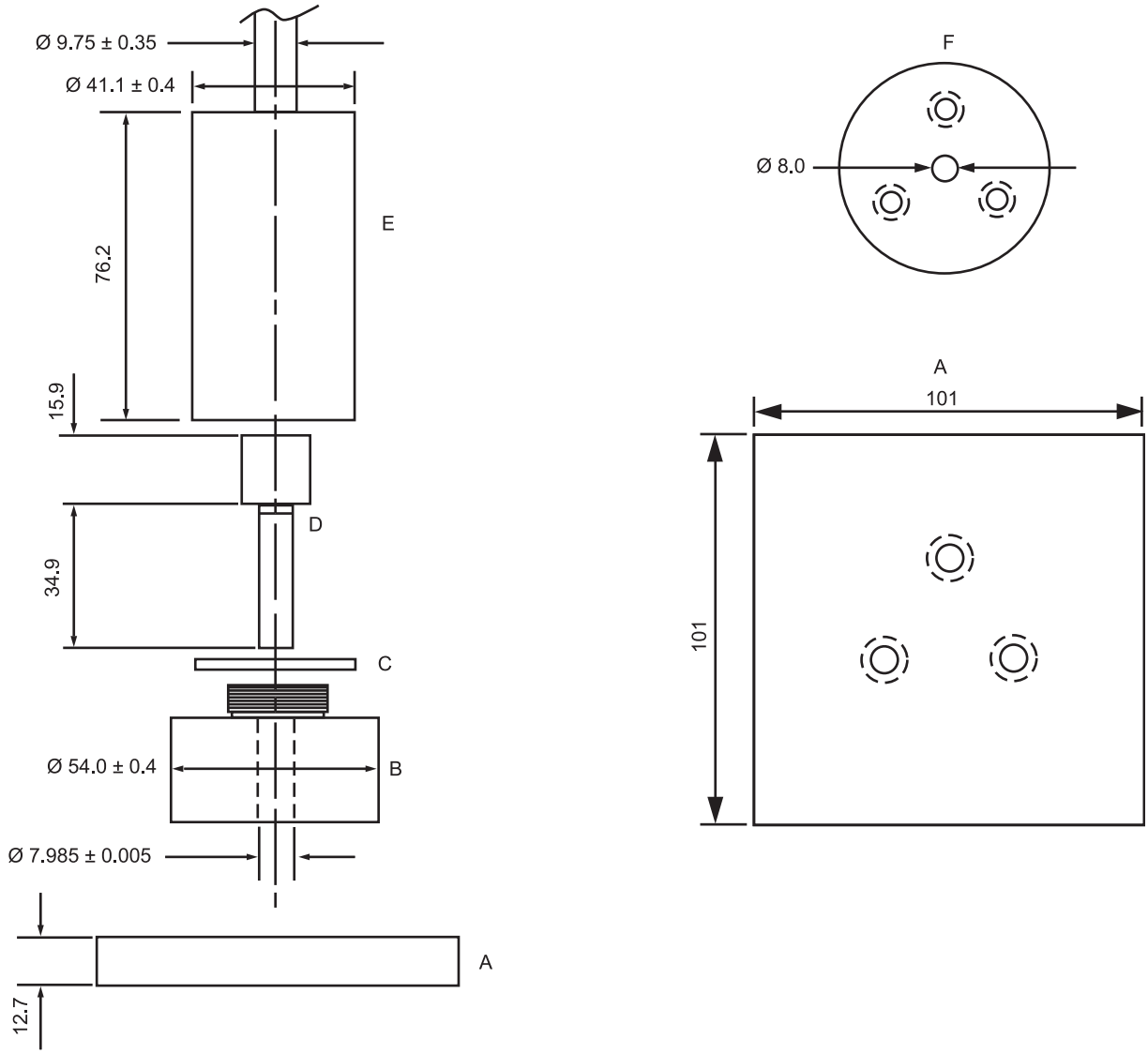

A. Surface plate B. Die C. Neoprene gasket D. Punch E. Holder and shaft assembly F. Die underside

Figure 2.9.29.-1. – *Typical apparatus used to obtain the compact for the determination of the intrinsic dissolution*
Dimensions in millimetres

minimal porosity; the disintegration of the compact has to be prevented as far as possible, since it would cause an increase in surface area and hence in dissolution rate. Detach the surface plate, and screw the die with punch still in place into the holder. Tighten securely. Remove all loose powder from the surface of the die by blowing compressed air or nitrogen across the surface of the compact.

Slide the die-holder assembly into the dissolution test chuck and tighten. Position the shaft in the spindle so that when the test head is lowered, the exposed surface of the compact will be 3.8 cm from the bottom of the vessel. The disc assembly is aligned to minimise wobble and air bubbles are not allowed to form as this could decrease the compact surface in contact with the dissolution medium. If possible, sink conditions are maintained throughout the test. However, in order to obtain detectable concentrations of solute, the use of a relatively small volume of medium may be necessary as a consequence of the limited surface available for dissolution.

Warm the dissolution medium to the temperature chosen for the test. Lower the test head into position before rotation. Care should be taken to ensure that air bubbles are excluded from the surface of the compact as this could decrease the compact surface in contact with the dissolution medium. Operate the apparatus immediately at the speed of rotation chosen for the test.

Collect samples at fixed time intervals and assay them by means of an analytical method of suitable sensitivity and accuracy.

ASSESSMENT OF THE RESULTS

The data for the cumulative amount dissolved at each time point are corrected for sampling losses. To calculate the intrinsic dissolution rate, plot the cumulative amount of sample dissolved per unit area of the compact against time. The cumulative amount dissolved per unit area is given by the cumulative amount dissolved at each time point divided by the surface area exposed. Linear regression is then performed on the normalised experimental data relevant to an appropriate time interval preceding the possible disintegration of the compact. The intrinsic dissolution rate of the substance tested, expressed in milligrams per minute per square centimetre, is determined from the slope of the regression line. The result for intrinsic dissolution rate must be accompanied by a statement of the precise conditions of compact preparation and test method (dissolution medium, volume of medium used, stirring rate, temperature etc.).

NOTE: when necessary and justified, an apparatus with a different configuration may be used, such as a die holder that holds the compact in a fixed vertical position, with agitation provided by a paddle positioned at a defined distance from the surface of the compact.

01/2010:20931

2.9.31. PARTICLE SIZE ANALYSIS BY LASER LIGHT DIFFRACTION

The method is based on the ISO standards 13320-1(1999) and 9276-1(1998).

INTRODUCTION

The laser light diffraction technique used for the determination of particle-size distribution is based on the analysis of the diffraction pattern produced when particles are exposed to a beam of monochromatic light. Historically, the early laser diffraction instruments only used scattering at small angles. However, the technique has since been broadened to include laser light scattering in a wider angular range and application of the Mie theory, in addition to the Fraunhofer approximation and anomalous diffraction.

The technique cannot distinguish between scattering by single particles and scattering by clusters of primary particles, i.e. by agglomerates or aggregates. As most particulate samples contain agglomerates or aggregates and as the focus of interest is generally on the size distribution of primary particles, the clusters are usually dispersed into primary particles before measurement.

For non-spherical particles, an equivalent sphere-size distribution is obtained because the technique assumes spherical particles in its optical model. The resulting particle-size distribution may differ from those obtained by methods based on other physical principles (e.g. sedimentation, sieving).

This chapter provides guidance for the measurement of size distributions of particles in different dispersed systems, for example, powders, sprays, aerosols, suspensions, emulsions, and gas bubbles in liquids, through analysis of their angular light-scattering patterns. It does not address specific requirements of particle size measurement of specific products.

PRINCIPLE

A representative sample, dispersed at an adequate concentration in a suitable liquid or gas, is passed through a beam of monochromatic light, usually a laser. The light scattered by the particles at various angles is measured by a multi-element detector. Numerical values representing the scattering pattern are then recorded for subsequent analysis. These scattering pattern values are then transformed, using an appropriate optical model and mathematical procedure, to yield the proportion of total volume to a discrete number of size classes, forming a volumetric particle-size distribution.

INSTRUMENT

The instrument is located in an environment where it is not affected by electrical noise, mechanical vibrations, temperature fluctuations, humidity or direct bright light.

An example of a set-up of a laser light diffraction instrument is given in Figure 2.9.31.-1. Other equipment may be used.

The instrument comprises a laser light source, beam processing optics, a sample measurement region (or cell), a Fourier lens, and a multi-element detector for measuring the scattered light pattern. A data system is also required for deconvolution of the scattering data into a volumetric size distribution and associated data analysis and reporting.

The particles can enter the laser beam in 2 positions. In the conventional case the particles enter the parallel beam before the collecting lens and within its working distance. In so-called reversed Fourier optics the particles enter behind the collecting lens and thus, in a converging beam. The advantage of the conventional set-up is that a reasonable path length for the sample is allowed within the working distance of the lens. The second set-up allows only small path lengths but enables measurement of scattered light at larger angles, which is useful when submicron particles are present.

The interaction of the incident light beam and the ensemble of dispersed particles results in a scattering pattern with different light intensities at various angles. The total angular intensity distribution, consisting of both direct and scattered light, is then focused onto a multi-element detector by a lens or a series of lenses. These lenses create a scattering pattern that, within limits, does not depend on the location of the particles in the light beam. Hence, the continuous angular intensity distribution is converted into a discrete spatial intensity distribution on a set of detector elements.

It is assumed that the measured scattering pattern of the particle ensemble is identical to the sum of the patterns from all individual single scattering particles presented in random relative positions. Note that only a limited angular range of scattered light is collected by the lens(es) and, therefore, by the detector.

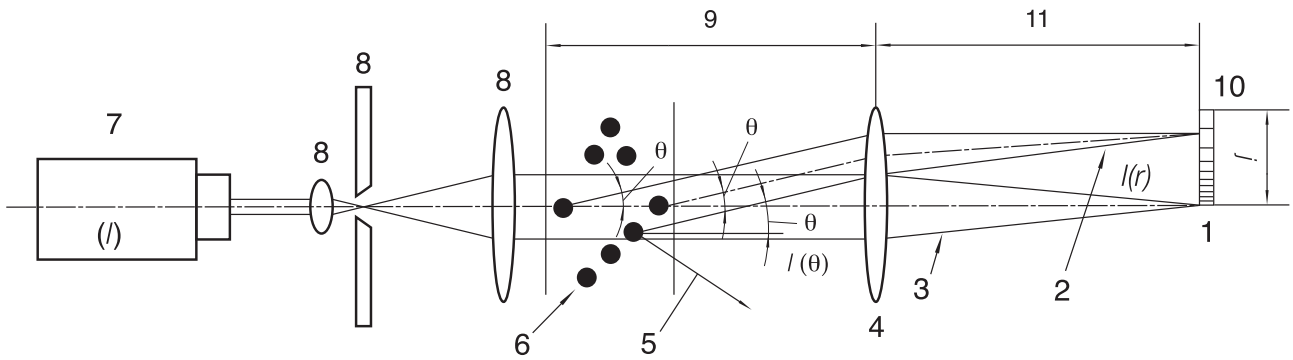

1. Obscuration detector
2. Scattered beam
3. Direct beam
4. Fourier lens
5. Scattered light not collected by lens (4)
6. Particle ensemble
7. Light source laser
8. Beam processing unit
9. Working distance of lens (4)
10. Multi-element detector
11. Focal distance of lens (4)

Figure 2.9.31.-1. - *Example of a set-up of a laser light diffraction instrument*

DEVELOPMENT OF THE METHOD

The measurement of particle size by laser diffraction can give reproducible data, even in the sub-micron region, provided the instrument used and the sample tested are carefully controlled to limit variability of the test conditions (e.g. dispersion medium, method of preparation of the sample dispersion).

Traditionally, the measurement of particle size using laser diffraction has been limited to particles in the range of approximately 0.1 µm to 3 mm. Because of recent advances in lens and equipment design, newer instruments are capable of exceeding this range routinely. With the validation report the user demonstrates the applicability of the method for its intended use.

Sampling. The sampling technique must be adequate to obtain a representative sample of a suitable volume for the particle-size measurement. Sample splitting techniques such as rotating riffler or the cone and quartering method may be applied.

Evaluation of the dispersion procedure. Inspect the sample to be analysed, visually or with the aid of a microscope, to estimate its size range and particle shape. The dispersion procedure must be adjusted to the purpose of the measurement. The purpose may be such that it is preferable to deagglomerate clusters into primary particles as far as possible, or it may be desirable to retain clusters as intact as possible. In this sense, the particles of interest may be either primary particles or clusters.

For the development of a method it is highly advisable to check that comminution of the particles does not occur, and conversely, that dispersion of particles or clusters is satisfactory. This can usually be done by changing the dispersing energy and monitoring the change of the particle-size distribution. The measured size distribution must not change significantly when the sample is well dispersed and the particles are neither fragile nor soluble. Moreover, if the manufacturing process (e.g. crystallisation, milling) of the material has changed, the applicability of the method must be verified (e.g. by microscopic comparison).

Sprays, aerosols and gas bubbles in a liquid should be measured directly, provided that their concentration is adequate, because sampling or dilution generally alters the particle-size distribution.

In other cases (such as emulsions, pastes and powders), representative samples may be dispersed in suitable liquids. Dispersing aids (wetting agents, stabilisers) and/or mechanical forces (e.g. agitation, sonication) are often applied for deagglomeration or deaggregation of clusters and stabilisation of the dispersion. For these liquid dispersions, a recirculating system is most commonly used, consisting of an optical measuring cell, a dispersion bath usually equipped with stirrer and ultrasonic elements, a pump, and tubing. Non-recirculating, stirred cells are useful when only small amounts of a sample are available or when special dispersion liquids are used.

Dry powders can also be converted into aerosols through the use of suitable dry powder dispersers, which apply mechanical force for deagglomeration or deaggregation. Generally, the dispersers use the energy of compressed gas or the differential pressure of a vacuum to disperse the particles to an aerosol, which is blown through the measuring zone, usually into the inlet of a vacuum unit that collects the particles. However, for free flowing, coarser particles or granules the effect of gravity may be sufficient to disperse the particles adequately.

If the maximum particle size of the sample exceeds the measuring range of the instrument, the material that is too coarse can be removed by sieving and the mass and percentage of removed material are reported. However, after pre-sieving, note that the sample is no longer representative, unless otherwise proven.

Optimisation of the liquid dispersion. Liquids, surfactants, and dispersing aids used to disperse powders must:

- be transparent at the laser wavelength and practically free from air bubbles or particles;
- have a refractive index that differs from that of the test material;
- be non-solvent of the test material (pure liquid or pre-filtered, saturated solution);
- not alter the size of the test materials (e.g. by solubility, solubility enhancement, or recrystallisation effects);
- favour easy formation and stability of the dispersion;
- be compatible with the materials used in the instrument (such as O-rings, gaskets, tubing, etc.);
- possess a suitable viscosity to facilitate recirculation, stirring and filtration.

Surfactants and/or dispersing aids are often used to wet the particles and to stabilise the dispersion. For weak acids and weak bases, buffering of the dispersing medium at low or high pH respectively can assist in identifying a suitable dispersant.

A preliminary check of the dispersion quality can be performed by visual or microscopic inspection. It is also possible to take fractional samples out of a well-mixed stock dispersion. Such stock dispersions are formed by adding a liquid to the sample while mixing it with, for example, a glass rod, a spatula or a vortex mixer. Care must be taken to ensure the transfer of a representative sample and that settling of larger particles does not occur. Therefore a sample paste is prepared or sampling is carried out quickly from a suspension maintained under agitation.

Optimisation of the gas dispersion. For sprays and dry powder dispersions, a compressed gas free from oil, water and particles may be used. To remove such materials from the compressed gas, a dryer with a filter can be used. Any vacuum unit should be located away from the measurement zone, so that its output does not disturb the measurement.

Determination of the concentration range. In order to produce an acceptable signal-to-noise ratio in the detector, the particle concentration in the dispersion must exceed a minimum level. Likewise, it must be below a maximum level in order to avoid multiple scattering. The concentration range is influenced by the width of the laser beam, the path length of the measurement zone, the optical properties of the particles, and the sensitivity of the detector elements.

In view of the above, measurements must be performed at different particle concentrations to determine the appropriate concentration range for any typical sample of material. (Note: in different instruments, particle concentrations are usually represented by differently scaled and differently named numbers, e.g. obscuration, optical concentration, proportional number of total mass).

Determination of the measuring time. The time of measurement, the reading time of the detector and the acquisition frequency are determined experimentally in accordance with the required precision. Generally, the time for measurement permits a large number of detector scans or sweeps at short time intervals.

Selection of an appropriate optical model. Most instruments use either the Fraunhofer or the Mie theory, though other approximation theories are sometimes applied for calculation of the scattering matrix. The choice of the theoretical model depends on the intended application and the different assumptions (size, absorbance, refractive index, roughness, crystal orientation, mixture, etc.) made for the test material. If the refractive index values (real and imaginary parts for the used wavelength) are not exactly known, then the Fraunhofer approximation or the Mie theory with a realistic estimate of the refractive index can be used. The former has the advantages that it is simple and it does not need refractive index values; the latter usually provides less-biased particle-size distributions for small particles. For instance, if the Fraunhofer model is used for samples containing an appreciable amount of small, transparent particles, a significantly larger amount of small particles may be calculated. In order to obtain traceable results, it is essential to document the refractive index values used, since small differences in the values assumed for the real and imaginary part of the complex refractive index may cause significant differences in the resulting particle-size distributions. Small values of the imaginary part of the refractive index (about 0.01-0.1 i) are often applied to allow the correction of the absorbance for the surface roughness of the particles. It should be noted, in general, that the optical properties of the substance to be tested, as well as the structure (e.g. shape, surface roughness and porosity), bear upon the final result.

Validation. Typically, the validity of a procedure may be assessed by the evaluation of its specificity, linearity, range, accuracy, precision and robustness. In particle-size analysis by laser light diffraction, specificity as defined by ICH is not applicable as it is not possible to discriminate between different components in a sample, nor is it possible to discriminate agglomerates from dispersed particles unless properly complemented by microscopic techniques. Exploring a linear relationship between concentration and response, or a mathematical model for interpolation, is not applicable to this procedure. Rather than evaluating linearity, this method requires the definition of a concentration range within which the result of the measurements does not vary significantly. Concentrations below that range produce an error due to a poor signal-to-noise ratio, while concentrations above that range produce an error due to multiple scattering. The range depends mostly on the instrument hardware. Accuracy should be confirmed through an appropriate instrument qualification and comparison with microscopy, while precision may be assessed by means of a repeatability determination.

The attainable repeatability of the method mainly depends on the characteristics of the material (milled/not milled, robust/fragile, width of its size distribution, etc.), whereas the required repeatability depends on the purpose of the measurement. Mandatory limits cannot be specified in this chapter, as repeatabilities (different sample preparations) may vary appreciably from one substance to another. However, it is good practice to aim at acceptance criteria for repeatability such as $s_{rel} \leq 10$ per cent [$n = 6$] for any central value of the distribution (e.g. for x_{50}). Values at the sides of the distribution (e.g. x_{10} and x_{90}) are oriented towards less stringent acceptance criteria such as $s_{rel} \leq 15$ per cent [$n = 6$]. Below 10 µm, these values must be doubled. Robustness may be tested during the selection and optimisation of the dispersion media and forces. The change of the dispersing energy may be monitored by the change in the particle-size distribution.

MEASUREMENT

Precautions. The instructions given in the instrument manual are followed:

- never look into the direct path of the laser beam or its reflections;
- earth all instrument components to prevent ignition of solvents or dust explosions;
- check the instrument set-up (e.g. warm-up, required measuring range and lens, appropriate working distance, position of the detector, no direct bright daylight);
- in the case of wet dispersions, avoid air bubbles, evaporation of liquid, schlieren or other inhomogeneities in the dispersion; similarly, avoid improper mass-flow from the disperser or turbulent air-flow in the case of dry dispersions; such effects can cause erroneous particle-size distributions.

Measurement of the light scattering of dispersed sample(s). After proper alignment of the optical part of the instrument, a blank measurement of the particle-free dispersion medium must be performed using the same method as that used for the measurement of the sample. The background signal must be below an appropriate threshold. The detector data are saved in order to substract them later from the data obtained with the sample. The sample dispersion is measured according to the developed method.

For each detector element, an average signal is calculated, sometimes together with its standard deviation. The magnitude of the signal from each detector element depends upon the detection area, the light intensity and the quantum efficiency. The co-ordinates (size and position) of the detector elements together with the focal distance of the lens determine the range of scattering angles for each element. Most instruments also measure the intensity of the central (unscattered) laser beam. The ratio of the intensity of a dispersed sample to that in its absence (a blank measurement) indicates the proportion of scattered light and hence the particle concentration.

Conversion of scattering pattern into particle-size distribution. This deconvolution step is the inverse of the calculation of a scattering pattern for a given particle-size distribution. The assumption of spherical particle shape is particularly important as most algorithms use the mathematical solution for scattering from spherical particles. Furthermore, the measured data always contain some random and systematic errors, which may vitiate the size distributions. Several mathematical procedures have been developed for use in the available instruments. They contain some weighting of deviations between measured and calculated

scattering patterns (e.g. least squares), some constraints (e.g. non-negativity for amounts of particles), and/or some smoothing of the size distribution curve.

The algorithms used are specific to each make and model of equipment, and are proprietary. The differences in the algorithms between different instruments may give rise to differences in the calculated particle-size distributions.

Replicates. The number of replicate measurements (with individual sample preparations) to be performed depends on the required measurement precision. It is recommended to set this number in a substance-specific method.

REPORTING OF RESULTS

The particle-size distribution data are usually reported as cumulative undersize distribution and/or as density distribution by volume. The symbol x is used to denote the particle size, which in turn is defined as the diameter of a volume-equivalent sphere. Q3(x) denotes the volume fraction undersize at the particle size x. In a graphical representation, x is plotted on the abscissa and the dependent variable Q3 on the ordinate. Most common characteristic values are calculated from the particle-size distribution by interpolation. The particle sizes at the undersize values of 10 per cent, 50 per cent, and 90 per cent (denoted as x_{10}, x_{50}, and x_{90} respectively) are frequently used. x_{50} is also known as the median particle size. It is recognised that the symbol d is also widely used to designate the particle size, thus the symbol x may be replaced by d.

Moreover, sufficient information must be documented about the sample, the sample preparation, the dispersion conditions, and the cell type. As the results depend on the particular instrument, data analysis program, and optical model used, these details must also be documented.

CONTROL OF THE INSTRUMENT PERFORMANCE

Use the instrument according to the manufacturer's instructions and carry out the prescribed qualifications at an appropriate frequency, according to the use of the instrument and substances to be tested.

Calibration. Laser diffraction systems, although assuming idealised properties of the particles, are based on first principles of laser light scattering. Thus, calibration in the strict sense is not required. However, it is still necessary to confirm that the instrument is operating correctly. This can be undertaken using any certified reference material that is acceptable in industrial practice. The entire measurement procedure is examined, including sample collection, sample dispersion, sample transport through the measuring zone, measurement, and the deconvolution procedure. It is essential that the total operational procedure is fully described.

The preferred certified reference materials consist of spherical particles of a known distribution. They must be certified as to the mass-percentage size distribution by an absolute technique, if available, and used in conjunction with an agreed, detailed operation procedure. It is essential that the real and imaginary parts of the complex refractive index of the material are indicated if the Mie theory is applied in data analysis. The representation of the particle-size distribution by volume will equal that of the distribution by mass, provided that the density of the particles is the same for all size fractions.

The response of a laser diffraction instrument is considered to meet the requirements if the mean value of x_{50} from at least 3 independent measurements does not deviate by more than 3 per cent from the certified range of values of the certified reference material. The mean values for x_{10} and x_{90} must not deviate by more than 5 per cent from the certified range of values. Below 10 µm, these values must be doubled.

Although the use of materials consisting of spherical particles is preferable, non-spherical particles may also be employed. Preferably, these particles have certified or typical values from laser diffraction analyses performed according to an agreed, detailed operating procedure. The use of reference values from methods other than laser diffraction may cause a significant bias. The reason for this bias is that the different principles inherent in the various methods may lead to different sphere-equivalent diameters for the same non-spherical particle.

Although the use of certified reference materials is preferred, other well-defined reference materials may also be employed. They consist of substances of typical composition and particle-size distribution for a specified class of substances. Their particle-size distribution has proven to be stable over time. The results must comply with previously determined data, with the same precision and bias as for the certified reference material.

Qualification of the system. In addition to the calibration, the performance of the instrument must be qualified at regular time intervals or as frequently as appropriate. This can be undertaken using any suitable reference material as mentioned in the previous paragraph.

The qualification of the system is based on the concept that the equipment, electronics, software and analytical operations constitute an integral system, which can be evaluated as an entity. Thus the entire measurement procedure is examined, including sample collection, sample dispersion, sample transport through the measuring zone, and the measurement and deconvolution procedure. It is essential that the total operational procedure is fully described.

In general, unless otherwise specified in the individual monograph, the response of a laser diffraction instrument is considered to meet the requirements if the x_{50} value does not deviate by more than 10 per cent from the range of values of the reference material. If optionally the values at the sides of the distribution are evaluated (e.g. x_{10} and x_{90}), then these values must not deviate by more than 15 per cent from the certified range of values. Below 10 µm, these values must be doubled.

NOTE: for calibration of the instrument, stricter requirements are laid down in the paragraph Calibration.

07/2008:20932

2.9.32. POROSITY AND PORE-SIZE DISTRIBUTION OF SOLIDS BY MERCURY POROSIMETRY

INTRODUCTION

In general, different types of pores may be pictured as apertures, channels or cavities within a solid body, or as space (i.e. interstices or voids) between solid particles in a bed, compact or aggregate. Porosity is a term that is often used to indicate the porous nature of solid material, and is more precisely defined as the ratio of the volume of accessible pores and voids to the total volume occupied by a given amount of the solid. In addition to the accessible pores, a solid may contain closed pores, which are isolated from the external surface and into which fluids are not able to penetrate. The characterisation of closed pores, i.e. cavities with no access to an external surface, is not covered in this chapter.

Porous materials may take the form of fine or coarse powders, compacts, extrudates, sheets or monoliths. Their characterisation usually involves the determination of the total pore volume or porosity as well as the pore-size distribution.

It is well established that the performance of a porous solid (e.g. its strength, reactivity, permeability or adsorbent power) is dependent upon its pore structure. Many different methods have been developed for the characterisation of pore structure. In view of the complexity of most porous solids, it is not surprising to find that the results obtained are not always in agreement and that no single technique can be relied upon to provide a complete picture of the pore structure. The choice

of the most appropriate method depends on the application of the porous solid, its chemical and physical nature and the range of pore-size.

This chapter provides guidance for measurement of porosity and pore-size distribution by mercury porosimetry. It is a comparative test, usually destructive, in which the volume of mercury penetrating a pore or void is determined as a function of an applied hydrostatic pressure, which can be related to a pore diameter. Other information such as pore shape and inter-connectivity, the internal and external surface area, powder granulometry, bulk and tapped density could also be inferred from volume-pressure curves; however, these aspects of the technique do not fall under the scope of this chapter.

Practical considerations presently limit the maximum applied absolute pressure reached by some equipment to about 400 MPa, corresponding to a minimum equivalent pore diameter of approximately 0.003 µm. The maximum diameter will be limited for samples having a significant depth due to the difference in hydrostatic head of mercury from the top to the bottom of the sample. For most purposes this limit may be regarded as 400 µm.

Inter-particle and intra-particle porosity can be determined, but the method does not distinguish between these porosities where they co-exist.

The method is suitable for the study of most porous materials. Samples that amalgamate with mercury, such as certain metals, may be unsuitable for this technique or may require a preliminary passivation. Other materials may deform or compact under the applied pressure. In some cases it may be possible to apply sample-compressibility corrections and useful comparative data may still be obtained.

Mercury porosimetry is considered to be comparative, as for most porous media a theory is not available to allow an absolute calculation of results of pore-size distribution. Therefore this technique is mainly recommended for development studies.

Mercury is toxic. Appropriate precautions must be observed to safeguard the health of the operator and others working in the area. Waste material must also be disposed of in a suitable manner, according to local regulations.

PRINCIPLE

The technique is based on the measurement of the mercury volume intruded into a porous solid as a function of the applied pressure. The measurement includes only those pores into which mercury can penetrate at the pressure applied.

A non-wetting liquid penetrates into a porous system only under pressure. The pressure to be applied is in inverse proportion to the inner diameter of the pore aperture. In the case of cylindrical pores, the correlation between pore diameter and pressure is given by the Washburn equation:

$$d_p = -\frac{4 \cdot \sigma}{p} \cos\theta$$

d_p = pore diameter, in metres;

σ = surface tension, in newtons per metre;

θ = contact angle of mercury on the sample, in degrees;

p = applied pressure, in pascals.

APPARATUS

The sample holder, referred to as penetrometer or dilatometer, has a calibrated capillary tube, through which the sample can be evacuated and through which mercury can enter. The capillary tube is attached to a wider tube in which the test sample is placed. The change in the volume of mercury intruded is usually measured by the change in capacitance between the mercury column in the capillary tube and a metal sleeve around the outside of the capillary tube. If precise measurements are required the expected total void and pore volume of the sample should be between 20 per cent and 90 per cent of the internal volume of the capillary tube. Since different materials exhibit a wide range of open porosities, a number of penetrometers with different capillary tube diameters and sample volumes may be required. A typical set-up for a mercury porosimeter instrument is given in Figure 2.9.32.-1. The porosimeter may have separate ports for high- and low-pressure operation, or the low-pressure measurement may be carried out on a separate unit.

The pressure range is typically 4-300 kPa for low-pressure operation and above 300 kPa for high-pressure operation, depending on the design of the particular apparatus and on the intended use.

METHOD

Sample preparation

The sample is pre-treated to remove adsorbed material that can obscure its accessible porosity, for example by heating and/or evacuation, or by flowing inert gas. It may be possible to passivate the surface of wettable or amalgam-forming solids, for example by producing a thin layer of oxide, or by coating with stearate.

The sample of the pre-treated solid is weighed and transferred to the penetrometer. The pore system of the sample is then degassed in a vacuum to a maximum residual pressure of 7 Pa.

Filling the penetrometer with mercury

The mercury used is of analytical quality. Overlay the sample with mercury under vacuum. The vacuum is required to ensure the transfer of mercury from the reservoir to the penetrometer. In a filled penetrometer the filling pressure comprises the applied pressure plus the pressure contribution created by the head of mercury contacting the sample. A typical filling pressure would be about 4 kPa. The hydrostatic pressure of the mercury over the sample may be minimised by filling the penetrometer in the horizontal position.

Low-pressure measurement

Admit air or nitrogen in a controlled manner to increase the pressure either in stages corresponding to the particular pore sizes of interest, or continuously at a slow rate. The concomitant change in the length of the mercury column in the capillary tube is recorded. When the maximum required pressure has been reached, return to atmospheric pressure.

High-pressure measurement

After measurement at low pressure, the penetrometer filled with mercury is transferred to the high-pressure port or unit of the instrument and overlaid with hydraulic fluid. Mercury is intruded into the pore system via the hydraulic fluid. Increase the pressure in the system to the maximum pressure reached in the low-pressure measurement and record the intrusion volume at this pressure, since subsequent intrusion volumes are calculated from this initial volume. Increase the pressure either in stages corresponding to the particular pore sizes of interest, or continuously at a slow rate. The fall in the mercury column is measured up to the maximum required pressure. If required the pressure may be decreased either in stages or continuously at a slow rate to determine the mercury extrusion curve.

Corrections are made to take account of changes in the volume of the mercury, the penetrometer and other components of the volume detector system under elevated pressure. The extent of the corrections may be determined by means of blank measurements under the same conditions.

An experimentally determined volume-pressure curve is shown in Figure 2.9.32.-2.

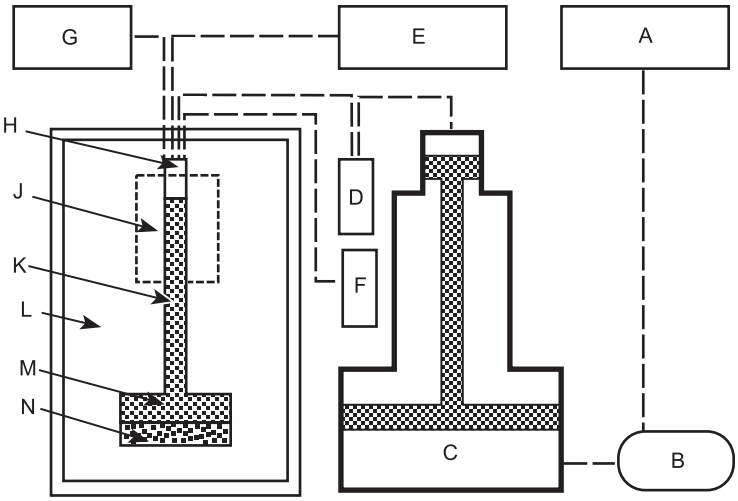

A. Low-pressure hydraulic fluid reservoir	E. High-pressure hydraulic fluid reservoir	J. Penetration volume indicator	N. Sample
B. Hydraulic pump	F. Vacuum pump with gauge	K. Capillary tube	
C. Pressure multiplier	G. Mercury reservoir	L. High-pressure chamber	
D. Pressure transducer	H. Oil	M. Mercury	

Figure 2.9.32.-1. – *Example of the set-up of a mercury porosimeter instrument*

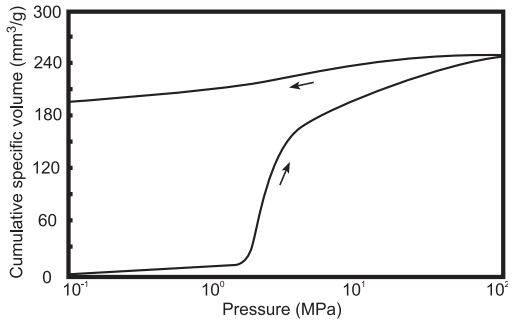

Figure 2.9.32.-2. – *Volume-pressure curve as semilogarithmic plot*

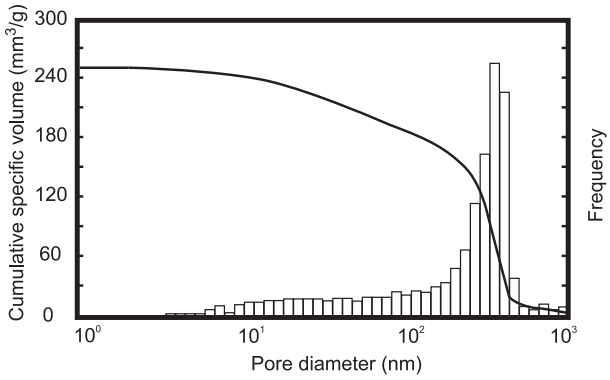

Figure 2.9.32.-3. – *Pore-size distribution as semilogarithmic plots of the cumulative and the normalised density distribution*

REPORTING OF RESULTS

The pressure readings can be converted to pore diameters by means of the Washburn equation or by another model.

The surface tension of mercury (σ) depends not only on the temperature, but also, in the case of markedly curved surfaces areas, on the radius of curvature. In general, values between 0.41 $N \cdot m^{-1}$ and 0.52 $N \cdot m^{-1}$ are measured at room temperature. If the value is not known, $\sigma = 0.48\ N \cdot m^{-1}$ can be used.

The contact angle of mercury (θ) in most cases is more than 90°. It may be determined using a contact angle instrument. If the value is not known, θ = 130° can be used. The values of contact angle and surface tension and the model used in the calculation are reported.

Visualisation of the data can be done with several types of graphs. Frequently, in a graphical representation the pore diameter is plotted on the abscissa and the intruded volume per sample mass on the ordinate to give the pore-size distribution. It is appropriate here to choose a logarithmic scale for the abscissa (see Figure 2.9.32.-3). The spaces between the particles of the solid sample are included as pores in the calculation. If the pores differ in size from the voids, the latter can be separated by choosing the appropriate pore-size range.

Extrusion curves may not be used for calculating the pore-size distribution (for hysteresis, see Figure 2.9.32.-2), because an intruded part of the mercury always remains in the pore system. The retention ratio may however be useful for the qualitative characterisation of pores that are only accessible via narrow openings ('ink-bottle pores').

Most common characteristic values, such as the total intruded specific volume and the mean and median pore diameters, are calculated from the pore-size distribution. Moreover, sufficient information must be documented about the sample, the sample preparation, the evacuation conditions and the instrument used.

CONTROL OF INSTRUMENT PERFORMANCE

As mercury porosimetry is considered to be used as a comparative test, no details are given in this chapter. However, it is recommended that a stable comparison material is tested on a regular basis to monitor instrument calibration and performance.

01/2009:20933

2.9.33. CHARACTERISATION OF CRYSTALLINE AND PARTIALLY CRYSTALLINE SOLIDS BY X-RAY POWDER DIFFRACTION (XRPD)

Every crystalline phase of a given substance produces a characteristic X-ray diffraction pattern.

Diffraction patterns can be obtained from a randomly oriented crystalline powder composed of crystallites or crystal fragments of finite size. Essentially 3 types of information can be derived from a powder diffraction pattern: angular position of diffraction lines (depending on geometry and size of the unit cell); intensities of diffraction lines (depending mainly on atom type and arrangement, and particle orientation within the sample); and diffraction line profiles (depending on instrumental resolution, crystallite size, strain and specimen thickness).

Experiments giving angular positions and intensities of lines can be used for applications such as qualitative phase analysis (for example, identification of crystalline phases) and quantitative phase analysis of crystalline materials. An estimate of the amorphous and crystalline fractions[10] can also be made.

The X-ray powder diffraction (XRPD) method provides an advantage over other means of analysis in that it is usually non-destructive in nature (specimen preparation is usually limited to grinding to ensure a randomly oriented sample). XRPD investigations can also be carried out under *in situ* conditions on specimens exposed to non-ambient conditions, such as low or high temperature and humidity.

PRINCIPLE

X-ray diffraction results from the interaction between X-rays and electron clouds of atoms. Depending on the atomic arrangement, interferences arise from the scattered X-rays. These interferences are constructive when the path difference between 2 diffracted X-ray waves differs by an integral number of wavelengths. This selective condition is described by the Bragg equation, also called Bragg's law (see Figure 2.9.33.-1):

$$2d_{hkl}\sin\theta_{hkl} = n\lambda$$

The wavelength λ of the X-rays is of the same order of magnitude as the distance between successive crystal lattice planes, or d_{hkl} (also called 'd-spacings'). θ_{hkl} is the angle between the incident ray and the family of lattice planes, and $\sin\theta_{hkl}$ is inversely proportional to the distance between successive crystal planes or d-spacings.

The direction and spacing of the planes with reference to the unit cell axes are defined by the Miller indices {*hkl*}. These indices are the reciprocals, reduced to the next-lower integer, of the intercepts that a plane makes with the unit cell axes. The unit cell dimensions are given by the spacings *a*, *b* and *c* and the angles between them, α, β, and γ.

The interplanar spacing for a specified set of parallel *hkl* planes is denoted by d_{hkl}. Each such family of planes may show higher orders of diffraction where the *d* values for the related families of planes n*h*, n*k*, n*l* are diminished by the factor 1/n (n being an integer: 2, 3, 4, etc.).

Every set of planes throughout a crystal has a corresponding Bragg diffraction angle, θ_{hkl}, associated with it (for a specific wavelength λ).

A powder specimen is assumed to be polycrystalline so that at any angle θ_{hkl} there are always crystallites in an orientation allowing diffraction according to Bragg's law[11]. For a given X-ray wavelength, the positions of the diffraction peaks (also referred to as 'lines', 'reflections' or 'Bragg reflections') are characteristic of the crystal lattice (d-spacings), their theoretical intensities depend on the crystallographic unit cell content (nature and positions of atoms), and the line profiles on the perfection and extent of the crystal lattice. Under these conditions the diffraction peak has a finite intensity arising from atomic arrangement, type of atoms, thermal motion and structural imperfections, as well as from instrument characteristics.

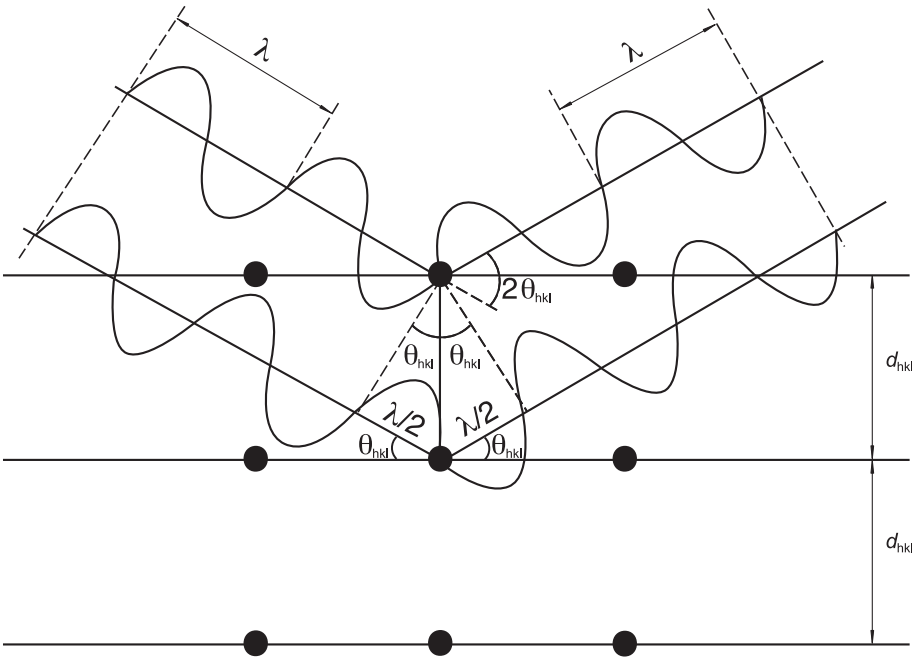

Figure 2.9.33.-1. – *Diffraction of X-rays by a crystal according to Bragg's law*

(10) There are many other applications of the X-ray powder diffraction technique that can be applied to crystalline pharmaceutical substances such as: determination of crystal structures, refinement of crystal structures, determination of crystallographic purity of crystalline phases, characterisation of crystallographic texture, etc. These applications are not described in this chapter.

(11) An 'ideal' powder for diffraction experiments consists of a large number of small, randomly oriented spherical crystallites (coherently diffracting crystalline domains). If this number is sufficiently large, there are always enough crystallites in any diffracting orientation to give reproducible diffraction patterns.

The intensity is dependent upon many factors such as structure factor, temperature factor, crystallinity, polarisation factor, multiplicity and Lorentz factor.

The main characteristics of diffraction line profiles are 2θ position, peak height, peak area and shape (characterised by, for example, peak width or asymmetry, analytical function, empirical representation). An example of the type of powder patterns obtained for 5 different solid phases of a substance are shown in Figure 2.9.33.-2.

In addition to the diffraction peaks, an X-ray diffraction experiment also generates a more-or-less uniform background, upon which the peaks are superimposed. Besides specimen preparation, other factors contribute to the background, for instance the sample holder, diffuse scattering from air and equipment, other instrumental parameters such as detector noise, general radiation from the X-ray tube, etc. The peak-to-background ratio can be increased by minimising background and by choosing prolonged exposure times.

INSTRUMENT

Instrument set-up. X-ray diffraction experiments are usually performed using powder diffractometers or powder cameras.

A powder diffractometer generally comprises 5 main parts: an X-ray source; incident beam optics, which may perform monochromatisation, filtering, collimation and/or focusing of the beam; a goniometer; diffraction beam optics, which may perform monochromatisation, filtering, collimation and focusing or parallelising of the beam; and a detector. Data-collection and data-processing systems are also required and are generally included in current diffraction measurement equipment.

Depending on the type of analysis to be performed (phase identification, quantitative analysis, lattice parameters determination, etc.), different XRPD instrument configurations and performance levels are required. The simplest instruments used to measure XRPD patterns are powder cameras. The replacement of photographic film as the detection method by photon detectors has led to the design of diffractometers in which the geometric arrangement of the optics is not truly focusing but parafocusing, such as in the Bragg-Brentano geometry. The Bragg-Brentano parafocusing configuration is currently the most widely used and is therefore briefly described here.

A given instrument may provide a horizontal or vertical θ/2θ geometry or a vertical θ/θ geometry. For both geometries, the incident X-ray beam forms an angle θ with the specimen surface plane and the diffracted X-ray beam forms an angle 2θ with the direction of the incident X-ray beam (an angle θ with the specimen surface plane). The basic geometric arrangement is represented in Figure 2.9.33.-3. The divergent beam of radiation from the X-ray tube (the so-called 'primary beam') passes through the parallel plate collimators and a divergence slit assembly and illuminates the flat surface of the specimen. All the rays diffracted by suitably oriented crystallites in the specimen at an angle 2θ converge to a line at the receiving slit. A second set of parallel plate collimators and a scatter slit may be placed either behind or before the receiving slit. The axes of the line focus and of the receiving slit are at equal distances from the axis of the goniometer. The X-ray quanta are counted by a radiation detector, usually a scintillation counter, a sealed-gas proportional counter, or a position-sensitive solid-state detector such as imaging plate or CCD detector. The receiving slit assembly and the detector are

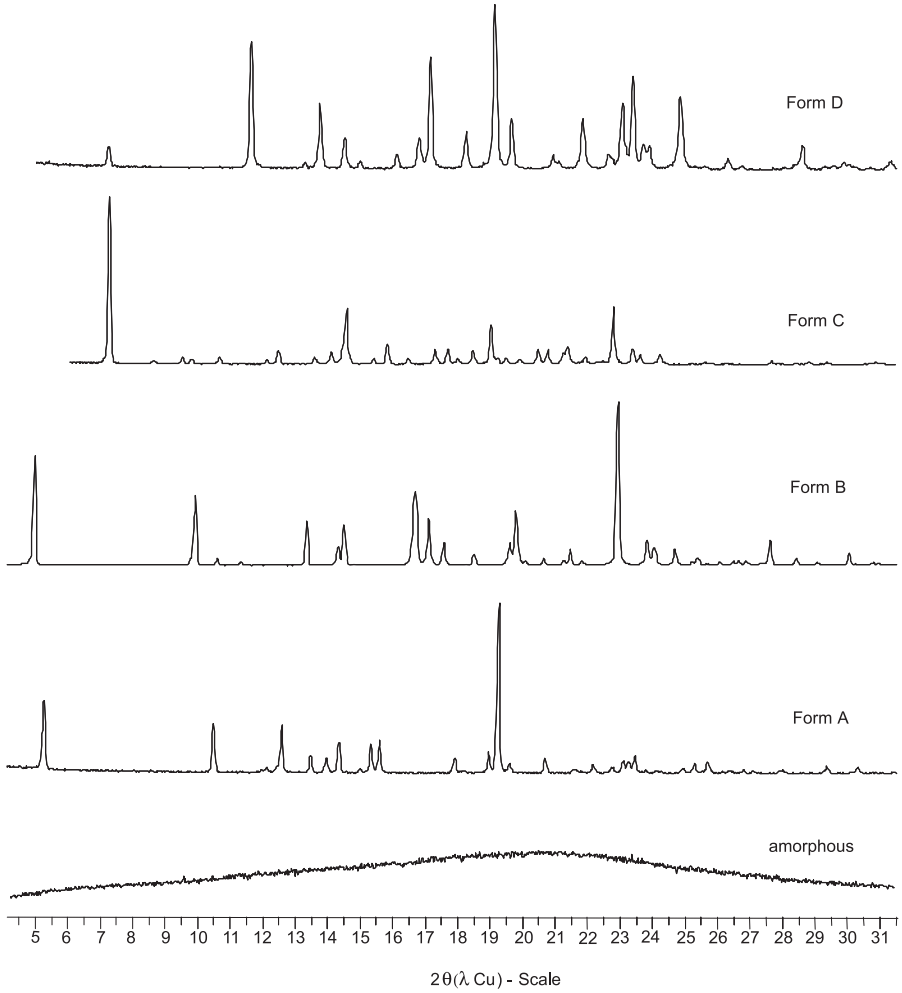

Figure 2.9.33.-2. – *X-ray powder diffraction patterns collected for 5 different solid phases of a substance (the intensities are normalised)*

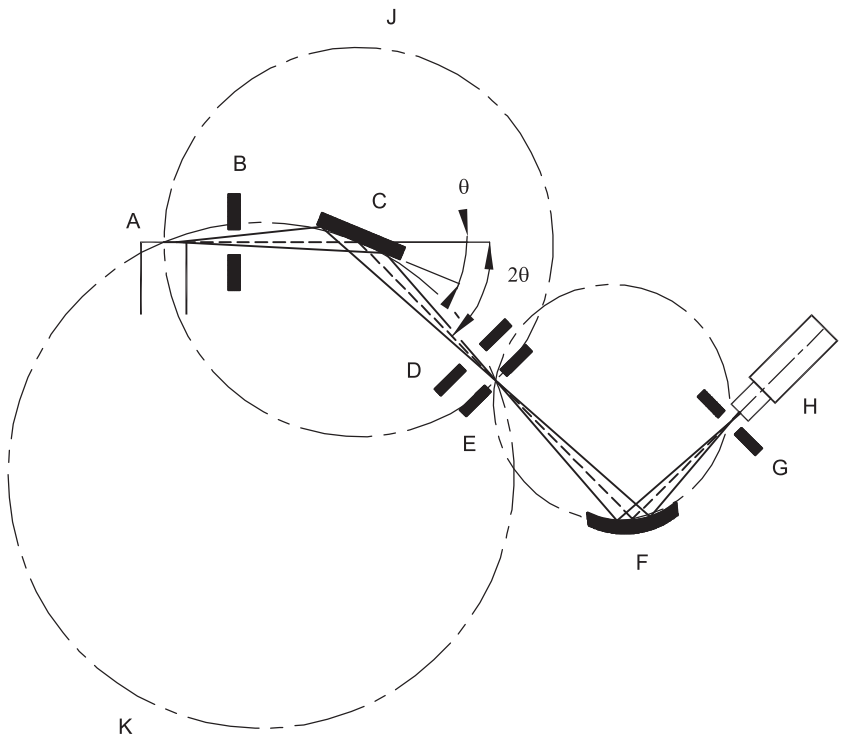

A. X-ray tube	C. sample	E. receiving slit	G. detector receiving slit	J. diffractometer circle
B. divergence slit	D. anti-diffusion slit	F. monochromator	H. detector	K. focusing circle

Figure 2.9.33.-3. – *Geometric arrangement of the Bragg-Brentano parafocusing geometry*

coupled together and move tangentially to the focusing circle. For θ/2θ scans the goniometer rotates the specimen about the same axis as that of the detector, but at half the rotational speed, in a θ/2θ motion. The surface of the specimen thus remains tangential to the focusing circle. The parallel plate collimator limits the axial divergence of the beam and hence partially controls the shape of the diffracted line profile.

A diffractometer may also be used in transmission mode. The advantage with this technology is to lessen the effects due to preferred orientation. A capillary of about 0.5-2 mm thickness can also be used for small sample amounts.

X-ray radiation. In the laboratory, X-rays are obtained by bombarding a metal anode with electrons emitted by the thermionic effect and accelerated in a strong electric field (using a high-voltage generator). Most of the kinetic energy of the electrons is converted to heat, which limits the power of the tubes and requires efficient anode cooling. A 20- to 30-fold increase in brilliance can be obtained using rotating anodes and by using X-ray optics. Alternatively, X-ray photons may be produced in a large-scale facility (synchrotron).

The spectrum emitted by an X-ray tube operating at sufficient voltage consists of a continuous background of polychromatic radiation and additional characteristic radiation that depends on the type of anode. Only this characteristic radiation is used in X-ray diffraction experiments. The principal radiation sources utilised for X-ray diffraction are vacuum tubes utilising copper, molybdenum, iron, cobalt or chromium as anodes; copper, molybdenum or cobalt X-rays are employed most commonly for organic substances (the use of cobalt anodes can be especially preferred to separate distinct X-ray lines). The choice of radiation to be used depends on the absorption characteristics of the specimen and possible fluorescence by atoms present in the specimen. The wavelengths used in powder diffraction generally correspond to the K_α radiation from the anode. Consequently, it is advantageous to make the X-ray beam 'monochromatic' by eliminating all the other components of the emission spectrum. This can be partly obtained using K_β filters, i.e. metal filters selected as having an absorption edge between the K_α and K_β wavelengths emitted by the tube.

Such a filter is usually inserted between the X-ray tube and the specimen. Another, more-and-more-commonly used way to obtain a monochromatic X-ray beam is via a large monochromator crystal (usually referred to as a 'monochromator'). This crystal is placed before or behind the specimen and diffracts the different characteristic peaks of the X-ray beam (i.e. K_α and K_β) at different angles, so that only one of them may be selected to enter into the detector. It is even possible to separate $K_{\alpha1}$ and $K_{\alpha2}$ radiations by using a specialised monochromator. Unfortunately, the gain in getting a monochromatic beam by using a filter or a monochromator is counteracted by a loss in intensity. Another way of separating K_α and K_β wavelengths is by using curved X-rays mirrors that can simultaneously monochromate and focus or parallelise the X-ray beam.

RADIATION PROTECTION. Exposure of any part of the human body to X-rays can be injurious to health. It is therefore essential that whenever X-ray equipment is used, adequate precautions are taken to protect the operator and any other person in the vicinity. Recommended practice for radiation protection as well as limits for the levels of X-radiation exposure are those established by national legislation in each country. If there are no official regulations or recommendations in a country, the latest recommendations of the International Commission on Radiological Protection should be applied.

SPECIMEN PREPARATION AND MOUNTING

The preparation of the powdered material and mounting of the specimen in a suitable holder are critical steps in many analytical methods, and are particularly so for XRPD analysis, since they can greatly affect the quality of the data to be collected[(12)]. The main sources of error due to specimen preparation and mounting are briefly discussed here for instruments in Bragg-Brentano parafocusing geometry.

(12) Similarly, changes in the specimen can occur during data collection in the case of a non-equilibrium specimen (temperature, humidity).

SPECIMEN PREPARATION

In general, the morphology of many crystalline particles tends to give a specimen that exhibits some degree of preferred orientation in the specimen holder. This is particularly evident for needle-like or plate-like crystals when size reduction yields finer needles or platelets. Preferred orientation in the specimen influences the intensities of various reflections, so that some are more intense and others are less intense, compared to what would be expected from a completely random specimen. Several techniques can be employed to improve randomness in the orientation of crystallites (and therefore to minimise preferred orientation), but further reduction of particle size is often the best and simplest approach. The optimum number of crystallites depends on the diffractometer geometry, the required resolution and the specimen attenuation of the X-ray beam. In some cases, particle sizes as large as 50 µm will provide satisfactory results in phase identification. However, excessive milling (crystallite sizes less than approximately 0.5 µm) may cause line broadening and significant changes to the sample itself such as:

- specimen contamination by particles abraded from the milling instruments (mortar, pestle, balls, etc.);
- reduced degree of crystallinity;
- solid-state transition to another polymorph;
- chemical decomposition;
- introduction of internal stress;
- solid-state reactions.

Therefore, it is advisable to compare the diffraction pattern of the non-ground specimen with that corresponding to a specimen of smaller particle size (e.g. a milled specimen). If the XRPD pattern obtained is of adequate quality considering its intended use, then grinding may not be required.

It should be noted that if a sample contains more than one phase and if sieving is used to isolate particles to a specific size, the initial composition may be altered.

SPECIMEN MOUNTING

Effect of specimen displacement. A specimen surface that is offset by D with reference to the diffractometer rotation axis causes systematic errors that are very difficult to avoid entirely; for the reflection mode, this results in absolute $D \cdot \cos\theta$ shifts[13] in 2θ positions (typically of the order of 0.01° in 2θ at low angles ($\cos\theta \simeq 1$) for a displacement D = 15 µm) and asymmetric broadening of the profile towards low 2θ values. Use of an appropriate internal standard allows the detection and correction of this effect simultaneously with that arising from specimen transparency. This is by far the largest source of errors in data collected on well-aligned diffractometers.

Effect of specimen thickness and transparency. When the XRPD method in reflection mode is applied, it is often preferable to work with specimens of 'infinite thickness'. To minimise the transparency effect, it is advisable to use a non-diffracting substrate (zero background holder), for example a plate of single crystalline silicon cut parallel to the 510 lattice planes[14]. One advantage of the transmission mode is that problems with sample height and specimen transparency are less important. The use of an appropriate internal standard allows the detection and correction of this effect simultaneously with that arising from specimen displacement.

CONTROL OF THE INSTRUMENT PERFORMANCE

Goniometers and the corresponding incident and diffracted X-ray beam optics have many mechanical parts that need adjustment. The degree of alignment or misalignment directly influences the quality of the results of an XRPD investigation. Therefore, the different components of the diffractometer must be carefully adjusted (optical and mechanical systems, etc.) to minimise adequately systematic errors, while optimising the intensities received by the detector. The search for maximum intensity and maximum resolution is always antagonistic when aligning a diffractometer. Hence, the best compromise must be sought whilst performing the alignment procedure. There are many different configurations and each supplier's equipment requires specific alignment procedures.

The overall diffractometer performance must be tested and monitored periodically using suitable certified reference materials. Depending on the type of analysis, other well-defined reference materials may also be employed, although the use of certified reference materials is preferred.

QUALITATIVE PHASE ANALYSIS (IDENTIFICATION OF PHASES)

The identification of the phase composition of an unknown sample by XRPD is usually based on the visual or computer-assisted comparison of a portion of its XRPD pattern to the experimental or calculated pattern of a reference material. Ideally, these reference patterns are collected on well-characterised single-phase specimens. This approach makes it possible in most cases to identify a crystalline substance by its 2θ diffraction angles or d-spacings and by its relative intensities. The computer-aided comparison of the diffraction pattern of the unknown sample to the comparison data can be based either on a more-or-less extended 2θ-range of the whole diffraction pattern or on a set of reduced data derived from the pattern. For example, the list of d-spacings and normalised intensities (I_{norm}), a so-called (d, I_{norm})-list extracted from the pattern, is the crystallographic fingerprint of the material, and can be compared to (d, I_{norm})-lists of single-phase samples compiled in databases.

For most organic crystals, when using Cu K_α radiation, it is appropriate to record the diffraction pattern in a 2θ-range from as near 0° as possible to at least 40°. The agreement in the 2θ-diffraction angles between specimen and reference is within 0.2° for the same crystal form, while relative intensities between specimen and reference may vary considerably due to preferred orientation effects. By their very nature, variable hydrates and solvates are recognised to have varying unit cell dimensions and as such shifting occurs in peak positions of the measured XRPD patterns for these materials. In these unique materials, variance in 2θ-positions of greater than 0.2° is not unexpected. As such, peak position variances such as 0.2° are not applicable to these materials. For other types of samples (e.g. inorganic salts), it may be necessary to extend the 2θ-region scanned to well beyond 40°. It is generally sufficient to scan past the 10 strongest reflections identified in single phase XRPD database files.

It is sometimes difficult or even impossible to identify phases in the following cases:

- non-crystallised or amorphous substances;
- the components to be identified are present in low mass fractions of the analyte amounts (generally less than 10 per cent m/m);
- pronounced preferred orientation effects;
- the phase has not been filed in the database used;
- formation of solid solutions;
- presence of disordered structures that alter the unit cell;
- the specimen comprises too many phases;
- presence of lattice deformations;
- structural similarity of different phases;

(13) Note that a goniometer zero alignment shift would result in constant shift on all observed 2θ-line positions, in other words, the whole diffraction pattern is in this case translated by an offset of Z° in 2θ.

(14) In the case of a thin specimen with low attenuation, accurate measurements of line positions can be made with focusing diffractometer configurations in either transmission or reflection geometry. Accurate measurements of line positions on specimens with low attenuation are preferably made using diffractometers with parallel beam optics. This helps to reduce the effects of specimen thickness.

QUANTITATIVE PHASE ANALYSIS

If the sample under investigation is a mixture of 2 or more known phases, of which not more than 1 is amorphous, the percentage (by volume or by mass) of each crystalline phase and of the amorphous phase can, in many cases, be determined. Quantitative phase analysis can be based on the integrated intensities, on the peak heights of several individual diffraction lines[(15)], or on the full pattern. These integrated intensities, peak heights or full-pattern data points are compared to the corresponding values of reference materials. These reference materials shall be single-phase or a mixture of known phases. The difficulties encountered during quantitative analysis are due to specimen preparation (the accuracy and precision of the results require in particular homogeneity of all phases and a suitable particle size distribution in each phase) and to matrix effects. In favourable cases, amounts of crystalline phases as small as 10 per cent may be determined in solid matrices.

POLYMORPHIC SAMPLES

For a sample composed of 2 polymorphic phases *a* and *b*, the following expression may be used to quantify the fraction F_a of phase *a*:

$$F_a = \frac{1}{1 + K\,(I_b/I_a)}$$

The fraction is derived by measuring the intensity ratio between the 2 phases, knowing the value of the constant *K*. *K* is the ratio of the absolute intensities of the 2 pure polymorphic phases I_{oa}/I_{ob}. Its value can be determined by measuring standard samples.

METHODS USING A STANDARD

The most commonly used methods for quantitative analysis are:

- the 'external standard method';
- the 'internal standard method';
- the 'spiking method' (often also called the 'standard addition method').

The 'external standard method' is the most general method and consists of comparing the X-ray diffraction pattern of the mixture, or the respective line intensities, with those measured in a reference mixture or with the theoretical intensities of a structural model, if it is fully known.

To limit errors due to matrix effects, an internal reference material with crystallite size and X-ray absorption coefficient comparable to those of the components of the sample, and with a diffraction pattern that does not overlap at all that of the sample to be analysed, can be used. A known quantity of this reference material is added to the sample to be analysed and to each of the reference mixtures. Under these conditions, a linear relationship between line intensity and concentration exists. This application, called the 'internal standard method', requires a precise measurement of diffraction intensities.

In the 'spiking method' (or 'standard addition method'), some of the pure phase *a* is added to the mixture containing the unknown concentration of *a*. Multiple additions are made to prepare an intensity-versus-concentration plot in which the negative *x* intercept is the concentration of the phase *a* in the original sample.

ESTIMATE OF THE AMORPHOUS AND CRYSTALLINE FRACTIONS

In a mixture of crystalline and amorphous phases, the crystalline and amorphous fractions can be estimated in several ways. The choice of the method used depends on the nature of the sample:

- if the sample consists of crystalline fractions and an amorphous fraction of different chemical compositions, the amounts of each of the individual crystalline phases may be estimated using appropriate standard substances as described above; the amorphous fraction is then deduced indirectly by subtraction;
- if the sample consists of one amorphous and one crystalline fraction, either as a 1-phase or a 2-phase mixture, with the same elemental composition, the amount of the crystalline phase ('the degree of crystallinity') can be estimated by measuring 3 areas of the diffractogram:

  A = total area of the peaks arising from diffraction from the crystalline fraction of the sample;

  B = total area below area *A*;

  C = background area (due to air scattering, fluorescence, equipment, etc).

When these areas have been measured, the degree of crystallinity can be roughly estimated using the following formula:

$$\%\,\text{crystallinity} = 100A/\,(A + B - C)$$

It is noteworthy that this method does not yield absolute degree-of-crystallinity values and hence is generally used for comparative purposes only.

More sophisticated methods are also available, such as the Ruland method.

SINGLE CRYSTAL STRUCTURE

In general, the determination of crystal structures is performed from X-ray diffraction data obtained using single crystals. However, crystal structure analysis of organic crystals is a challenging task, since the lattice parameters are comparatively large, the symmetry is low and the scattering properties are normally very low.

For any given crystalline form of a substance, knowledge of the crystal structure allows the calculation of the corresponding XRPD pattern, thereby providing a 'preferred-orientation-free' reference XRPD pattern, which may be used for phase identification.

01/2013:20934

2.9.34. BULK DENSITY AND TAPPED DENSITY OF POWDERS

Bulk density

The bulk density of a powder is the ratio of the mass of an untapped powder sample to its volume, including the contribution of the interparticulate void volume. Hence, the bulk density depends on both the density of powder particles and the spatial arrangement of particles in the powder bed. The bulk density is expressed in grams per millilitre despite the International Unit being kilogram per cubic metre (1 g/mL = 1000 kg/m^3), because the measurements are made using cylinders. It may also be expressed in grams per cubic centimetre.

The bulking properties of a powder are dependent upon the preparation, treatment and storage of the sample, i.e. how it has been handled. The particles can be packed to have a range of bulk densities and, moreover, the slightest disturbance of the powder bed may result in a changed bulk density. Thus, the bulk density of a powder is often very difficult to measure with good reproducibility and, in reporting the results, it is essential to specify how the determination was made.

(15) If the crystal structures of all components are known, the Rietveld method can be used to quantify them with good accuracy. If the crystal structures of the components are not known, the Pawley or least squares methods can be used.

The bulk density of a powder is determined either by measuring the volume of a known mass of powder sample, which may have been passed through a sieve, in a graduated cylinder (Method 1), or by measuring the mass of a known volume of powder that has been passed through a volumeter into a cup (Method 2) or has been introduced into a measuring vessel (Method 3).

Methods 1 and 3 are favoured.

METHOD 1: MEASUREMENT IN A GRADUATED CYLINDER

Procedure. Pass a quantity of powder sufficient to complete the test through a sieve with apertures greater than or equal to 1.0 mm, if necessary, to break up agglomerates that may have formed during storage; this must be done gently to avoid changing the nature of the material. Into a dry, graduated, 250 mL cylinder (readable to 2 mL), gently introduce, without compacting, approximately 100 g (m) of the test sample weighed with 0.1 per cent accuracy. If necessary, carefully level the powder without compacting, and read the unsettled apparent volume (V_0) to the nearest graduated unit. Calculate the bulk density in grams per millilitre using the formula m/V_0. Generally, replicate determinations are desirable for the determination of this property.

If the powder density is too low or too high, such that the test sample has an untapped apparent volume of more than 250 mL or less than 150 mL, it is not possible to use 100 g of powder sample. In this case, a different amount of powder is selected as the test sample, such that its untapped apparent volume is between 150 mL and 250 mL (apparent volume greater than or equal to 60 per cent of the total volume of the cylinder); the mass of the test sample is specified in the expression of results.

For test samples having an apparent volume between 50 mL and 100 mL, a 100 mL cylinder readable to 1 mL can be used; the volume of the cylinder is specified in the expression of results.

METHOD 2: MEASUREMENT IN A VOLUMETER

Apparatus. The apparatus (Figure 2.9.34.-1) consists of a top funnel fitted with a 1.0 mm sieve, mounted over a baffle box containing 4 glass baffles over which the powder slides and bounces as it passes. At the bottom of the baffle box is a funnel that collects the powder and allows it to pour into a cup mounted directly below it. The cup may be cylindrical (25.00 ± 0.05 mL volume with an internal diameter of 30.00 ± 2.00 mm) or cubical (16.39 ± 0.20 mL volume with internal dimensions of 25.400 ± 0.076 mm).

Procedure. Allow an excess of powder to flow through the apparatus into the sample receiving cup until it overflows, using a minimum of 25 cm^3 of powder with the cubical cup and 35 cm^3 of powder with the cylindrical cup. Carefully, scrape excess powder from the top of the cup by smoothly moving the edge of the blade of a spatula perpendicular to and in contact with the top surface of the cup, taking care to keep the spatula perpendicular to prevent packing or removal of powder from the cup. Remove any material from the side of the cup and determine the mass (M) of the powder to the nearest 0.1 per cent. Calculate the bulk density in grams per millilitre using the formula M/V_0 (where V_0 is the volume of the cup) and record the average of 3 determinations using 3 different powder samples.

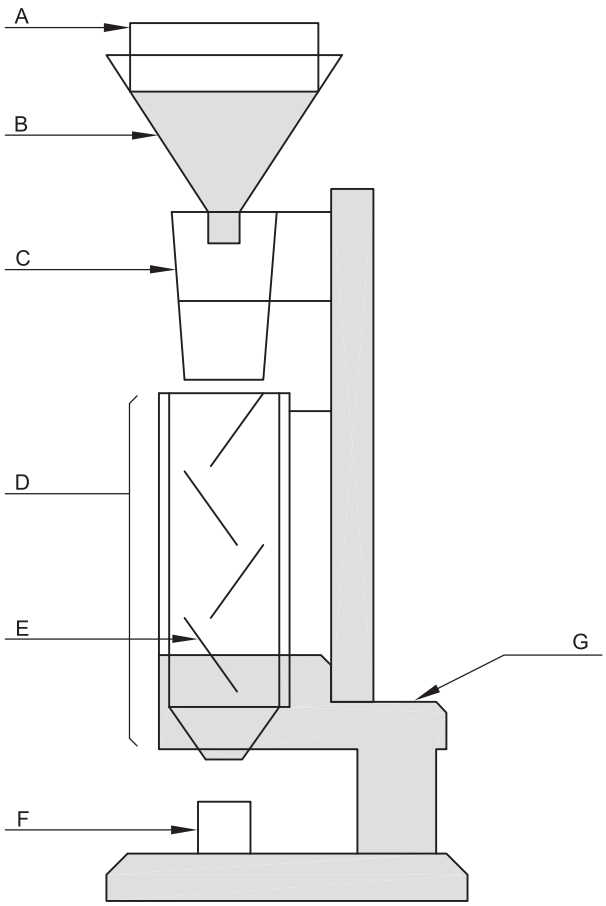

A. 1.0 mm sieve
B. powder funnel
C. loading funnel
D. baffle box
E. glass baffle
F. cup
G. stand

Figure 2.9.34.-1. – *Volumeter*

METHOD 3: MEASUREMENT IN A VESSEL

Apparatus. The apparatus consists of a 100 mL cylindrical vessel of stainless steel with dimensions as specified in Figure 2.9.34.-2.

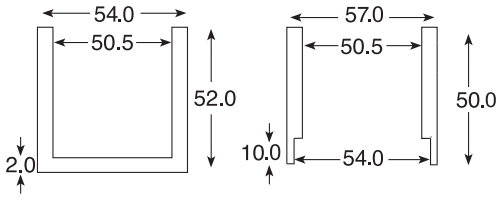

Figure 2.9.34.-2. – *Measuring vessel (left) and cap (right) Dimensions in millimetres*

Procedure. Pass a quantity of powder sufficient to complete the test through a 1.0 mm sieve, if necessary, to break up agglomerates that may have formed during storage, and allow the obtained sample to flow freely into the measuring vessel until it overflows. Carefully scrape the excess powder from the top of the vessel as described under Method 2. Determine the mass (M_0) of the powder to the nearest 0.1 per cent by subtracting the previously determined mass of the empty measuring vessel. Calculate the bulk density in grams per millilitre using the formula $M_0/100$ and record the average of 3 determinations using 3 different powder samples.

Tapped density

The tapped density is an increased bulk density attained after mechanically tapping a receptacle containing the powder sample.

The tapped density is obtained by mechanically tapping a graduated measuring cylinder or vessel containing the powder sample. After observing the initial powder volume or mass, the measuring cylinder or vessel is mechanically tapped, and volume or mass readings are taken until little further volume or mass change is observed. The mechanical tapping is achieved by raising the cylinder or vessel and allowing it to drop, under its own mass, a specified distance by one of 3 methods as described below. Devices that rotate the cylinder or vessel during tapping may be preferred to minimise any possible separation of the mass during tapping down.

METHOD 1

Apparatus. The apparatus (Figure 2.9.34.-3) consists of the following:

- a 250 mL graduated cylinder (readable to 2 mL) with a mass of 220 ± 44 g;
- a settling apparatus capable of producing, per minute, either nominally 250 ± 15 taps from a height of 3 ± 0.2 mm, or nominally 300 ± 15 taps from a height of 14 ± 2 mm. The support for the graduated cylinder, with its holder, has a mass of 450 ± 10 g.

Procedure. Proceed as described above for the determination of the bulk volume (V_0). Secure the cylinder in the support. Carry out 10, 500 and 1250 taps on the same powder sample and read the corresponding volumes V_{10}, V_{500} and V_{1250} to the nearest graduated unit. If the difference between V_{500} and V_{1250} is less than or equal to 2 mL, V_{1250} is the tapped volume. If the difference between V_{500} and V_{1250} exceeds 2 mL, repeat in increments of, for example, 1250 taps, until the difference between successive measurements is less than or equal to 2 mL. Fewer taps may be appropriate for some powders, when validated. Calculate the tapped density in grams per millilitre using the formula m/V_f (where V_f is the final tapped volume). Generally, replicate determinations are desirable for the determination of this property. Specify the drop height with the results.

If it is not possible to use a 100 g test sample, use a reduced amount and a suitable 100 mL graduated cylinder (readable to 1 mL) weighing 130 ± 16 g and mounted on a support weighing 240 ± 12 g. The modified test conditions are specified in the expression of the results.

METHOD 2

Procedure. Proceed as directed under Method 1 except that the mechanical tester provides a fixed drop of 3 ± 0.2 mm at a nominal rate of 250 taps per minute.

METHOD 3

Procedure. Proceed as described under Method 3 for measuring the bulk density, using the measuring vessel equipped with the cap shown in Figure 2.9.34.-2. The measuring vessel with the cap is lifted 50-60 times per minute by the use of a suitable tapped density tester. Carry out 200 taps, remove the cap and carefully scrape excess powder from the top of the measuring vessel as described under Method 3 for measuring the bulk density. Repeat the procedure using 400 taps. If the difference between the 2 masses obtained after 200 and 400 taps exceeds 2 per cent, repeat the test using 200 additional taps until the difference between successive measurements is less than 2 per cent. Calculate the tapped density in grams per millilitre using the formula $M_f/100$ (where M_f is the mass of powder in the measuring vessel). Record the average of 3 determinations

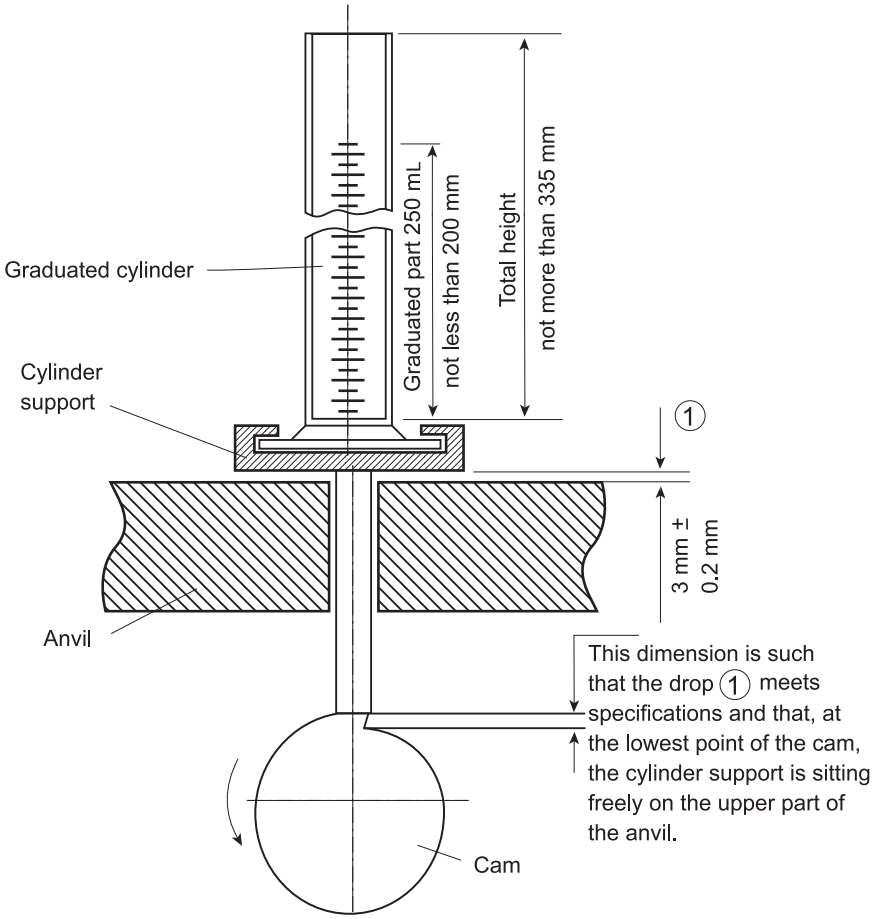

Figure 2.9.34.-3. – *Settling device for powder samples*
Dimensions in millimetres

using 3 different powder samples. The test conditions, including tapping height, are specified in the expression of the results.

Measures of powder compressibility

Because the interparticulate interactions influencing the bulking properties of a powder are also the interactions that interfere with powder flow, a comparison of the bulk and tapped densities can give a measure of the relative importance of these interactions in a given powder. Such a comparison is often used as an index of the ability of the powder to flow, for example the compressibility index or the Hausner ratio.

The compressibility index and Hausner ratio are measures of the propensity of a powder to be compressed as described above. As such, they are measures of the powder's ability to settle, and they permit an assessment of the relative importance of interparticulate interactions. In a free-flowing powder, such interactions are less significant, and the bulk and tapped densities will be closer in value. For more-poorly flowing materials, there are frequently greater interparticulate interactions, and a greater difference between the bulk and tapped densities will be observed. These differences are reflected in the compressibility index and the Hausner ratio.

Compressibility index:

$$\frac{100\,(V_0 - V_f)}{V_0}$$

V_0 = unsettled apparent volume;

V_f = final tapped volume.

Hausner Ratio:

$$\frac{V_0}{V_f}$$

Depending on the material, the compressibility index can be determined using V_{10} instead of V_0. If V_{10} is used, it is clearly stated with the results.

07/2008:20935

2.9.35. POWDER FINENESS

Particle-size distribution is estimated by analytical sieving (*2.9.38*) or by application of other suitable methods where appropriate. A simple descriptive classification of powder fineness is provided in this chapter. For practical reasons, sieves are commonly used to measure powder fineness. Sieving is most suitable where a majority of the particles are larger than about 75 µm, although it can be used for some powders having smaller particle sizes where the method can be validated. Light diffraction is also a widely used technique for measuring the size of a wide range of particles.

Where the cumulative distribution has been determined by analytical sieving or by application of other methods, particle size may be characterised in the following manner:

x_{90} = particle size corresponding to 90 per cent of the cumulative undersize distribution;

x_{50} = median particle size (i.e. 50 per cent of the particles are smaller and 50 per cent of the particles are larger);

x_{10} = particle size corresponding to 10 per cent of the cumulative undersize distribution.

It is recognised that the symbol d is also widely used to designate these values. Therefore, the symbols d_{90}, d_{50}, d_{10} may be used.

The following parameters may be defined based on the cumulative distribution.

$Q_r(x)$ = cumulative distribution of particles with a dimension less than or equal to x where the subscript r reflects the distribution type.

r	Distribution type
0	Number
1	Length
2	Area
3	Volume

Therefore, by definition:

$Q_r(x) = 0.90$ when $x = x_{90}$

$Q_r(x) = 0.50$ when $x = x_{50}$

$Q_r(x) = 0.10$ when $x = x_{10}$

An alternative but less informative method of classifying powder fineness is by use of the descriptive terms in Table 2.9.35.-1.

Table 2.9.35.-1.

Classification of powders by fineness		
Descriptive term	**x_{50} (µm)**	**Cumulative distribution by volume basis, $Q_3(x)$**
Coarse	> 355	$Q_3(355) < 0.50$
Moderately fine	180 - 355	$Q_3(180) < 0.50$ and $Q_3(355) \geq 0.50$
Fine	125 - 180	$Q_3(125) < 0.50$ and $Q_3(180) \geq 0.50$
Very fine	≤ 125	$Q_3(125) \geq 0.50$

01/2010:20936

2.9.36. POWDER FLOW(16)

The widespread use of powders in the pharmaceutical industry has generated a variety of methods for characterising powder flow. Not surprisingly, scores of references appear in the pharmaceutical literature, attempting to correlate the various measures of powder flow to manufacturing properties. The development of such a variety of test methods was inevitable; powder behavior is multifaceted and thus complicates the effort to characterise powder flow.

The purpose of this chapter is to review the methods for characterising powder flow that have appeared most frequently in the pharmaceutical literature. In addition, while it is clear that no single and simple test method can adequately characterise the flow properties of pharmaceutical powders, this chapter proposes the standardisation of test methods that may be valuable during pharmaceutical development.

4 commonly reported methods for testing powder flow are:

- angle of repose,
- compressibility index or Hausner ratio,
- flow rate through an orifice,
- shear cell.

In addition, numerous variations of each of these basic methods are available. Given the number of test methods and variations, standardising the test methodology, where possible, would be advantageous.

With this goal in mind, the most frequently used methods are discussed below. Important experimental considerations are identified and recommendations are made regarding standardisation of the methods. In general, any method of measuring powder flow must be practical, useful, reproducible and sensitive, and must yield meaningful results. It bears

(16) This chapter has undergone pharmacopoeial harmonisation. See chapter *5.8. Pharmacopoeial harmonisation*.

repeating that no simple powder flow method will adequately or completely characterise the wide range of flow properties experienced in the pharmaceutical industry. An appropriate strategy may well be the use of multiple standardised test methods to characterise the various aspects of powder flow as needed by the pharmaceutical scientist.

ANGLE OF REPOSE

The angle of repose has been used in several branches of science to characterise the flow properties of solids. Angle of repose is a characteristic related to interparticulate friction, or resistance to movement between particles. Angle of repose test results are reported to be very dependent upon the method used. Experimental difficulties arise due to segregation of material and consolidation or aeration of the powder as the cone is formed. Despite its difficulties, the method continues to be used in the pharmaceutical industry, and a number of examples demonstrating its value in predicting manufacturing problems appear in the literature.

The angle of repose is the constant, three-dimensional angle (relative to the horizontal base) assumed by a cone-like pile of material formed by any of several different methods, described briefly below.

Basic methods for angle of repose

A variety of angle of repose test methods are described in the literature. The most common methods for determining the static angle of repose can be classified based on 2 important experimental variables:

- the height of the 'funnel' through which the powder passes may be fixed relative to the base, or the height may be varied as the pile forms;
- the base upon which the pile forms may be of fixed diameter or the diameter of the powder cone may be allowed to vary as the pile forms.

Variations in angle of repose methods

Variations of the above methods have also been used to some extent in the pharmaceutical literature:

- *drained angle of repose*: this is determined by allowing an excess quantity of material positioned above a fixed diameter base to 'drain' from the container. Formation of a cone of powder on the fixed diameter base allows determination of the drained angle of repose;
- *dynamic angle of repose*: this is determined by filling a cylinder (with a clear, flat cover on one end) and rotating it at a specified speed. The dynamic angle of repose is the angle (relative to the horizontal) formed by the flowing powder. The internal angle of kinetic friction is defined by the plane separating those particles sliding down the top layer of the powder and those particles that are rotating with the drum (with roughened surface).

General scale of flowability for angle of repose

While there is some variation in the qualitative description of powder flow using the angle of repose, much of the pharmaceutical literature appears to be consistent with the classification by Carr[17], which is shown in Table 2.9.36.-1. There are examples in the literature of formulations with an angle of repose in the range of 40-50 degrees that manufactured satisfactorily. When the angle of repose exceeds 50 degrees, the flow is rarely acceptable for manufacturing purposes.

Table 2.9.36.-1. – *Flow properties and corresponding angles of repose*[17]

Flow property	Angle of repose (degrees)
Excellent	25-30
Good	31-35
Fair (aid not needed)	36-40
Passable (may hang up)	41-45
Poor (must agitate, vibrate)	46-55
Very poor	56-65
Very, very poor	> 66

Experimental considerations for angle of repose

Angle of repose is not an intrinsic property of the powder, that is to say, it is very much dependent upon the method used to form the cone of powder. On this subject, the existing literature raises these important considerations:

- the peak of the cone of powder can be distorted by the impact of powder from above. By carefully building the powder cone, the distortion caused by impact can be minimised;
- the nature of the base upon which the powder cone is formed influences the angle of repose. It is recommended that the powder cone be formed on a 'common base', which can be achieved by forming the cone of powder on a layer of powder. This can be done by using a base of fixed diameter with a protruding outer edge to retain a layer of powder upon which the cone is formed.

Recommended procedure for angle of repose

Form the angle of repose on a fixed base with a retaining lip to retain a layer of powder on the base. The base must be free of vibration. Vary the height of the funnel to carefully build up a symmetrical cone of powder. Care must be taken to prevent vibration as the funnel is moved. The funnel height is maintained at approximately 2-4 cm from the top of the powder pile as it is being formed in order to minimise the impact of falling powder on the tip of the cone. If a symmetrical cone of powder cannot be successfully or reproducibly prepared, this method is not appropriate. Determine the angle of repose by measuring the height of the cone of powder and calculating the angle of repose, α, from the following equation:

$$\tan(\alpha) = \frac{\text{height}}{0.5 \times \text{base}}$$

COMPRESSIBILITY INDEX AND HAUSNER RATIO

In recent years the compressibility index and the closely related Hausner ratio have become the simple, fast, and popular methods of predicting powder flow characteristics. The compressibility index has been proposed as an indirect measure of bulk density, size and shape, surface area, moisture content, and cohesiveness of materials, because all of these can influence the observed compressibility index. The compressibility index and the Hausner ratio are determined by measuring both the bulk volume and tapped volume of a powder.

Basic methods for compressibility index and Hausner ratio

While there are some variations in the method of determining the compressibility index and Hausner ratio, the basic procedure is to measure the unsettled apparent volume, (V_0), and the final tapped volume, (V_f), of the powder after tapping the material until no further volume changes occur. The

(17) Carr RL. Evaluating flow properties of solids. *Chem. Eng* 1965; 72:163-168.

compressibility index and the Hausner ratio are calculated as follows:

$$Compressibility\ Index = 100 \times \frac{V_0 - V_f}{V_0}$$

$$Hausner\ Ratio = \frac{V_0}{V_f}$$

Alternatively, the compressibility index and Hausner ratio may be calculated using measured values of bulk density (ρ_{bulk}) and tapped density (ρ_{tapped}) as follows:

$$Compressibility\ Index = 100 \times \frac{\rho_{tapped} - \rho_{bulk}}{\rho_{tapped}}$$

$$Hausner\ Ratio = \frac{\rho_{tapped}}{\rho_{bulk}}$$

In a variation of these methods, the rate of consolidation is sometimes measured rather than, or in addition to, the change in volume that occurs on tapping. For the compressibility index and the Hausner ratio, the generally accepted scale of flowability is given in Table 2.9.36.-2.

Table 2.9.36.-2. – *Scale of flowability*[17]

Compressibility index (per cent)	Flow character	Hausner ratio
1-10	Excellent	1.00-1.11
11-15	Good	1.12-1.18
16-20	Fair	1.19-1.25
21-25	Passable	1.26-1.34
26-31	Poor	1.35-1.45
32-37	Very poor	1.46-1.59
> 38	Very, very poor	> 1.60

Experimental considerations for the compressibility index and Hausner ratio

Compressibility index and Hausner ratio are not intrinsic properties of the powder, that is to say, they are dependent upon the methodology used. The existing literature points out several important considerations affecting the determination of the unsettled apparent volume, V_0, of the final tapped volume, V_f, of the bulk density, ρ_{bulk}, and of the tapped density, ρ_{tapped}:

- the diameter of the cylinder used,
- the number of times the powder is tapped to achieve the tapped density,
- the mass of material used in the test,
- rotation of the sample during tapping.

Recommended procedure for compressibility index and Hausner ratio

Use a 250 mL volumetric cylinder with a test sample mass of 100 g. Smaller amounts and volumes may be used, but variations in the method must be described with the results. An average of 3 determinations is recommended.

FLOW THROUGH AN ORIFICE

The flow rate of a material depends upon many factors, some of which are particle-related and some related to the process. Monitoring the rate of flow of material through an orifice has been proposed as a better measure of powder flowability. Of particular significance is the utility of monitoring flow continuously, since pulsating flow patterns have been observed even for free-flowing materials. Changes in flow rate as the container empties can also be observed. Empirical equations relating flow rate to the diameter of the opening, particle size, and particle density have been determined. However, determining the flow rate through an orifice is useful only with free-flowing materials.

The flow rate through an orifice is generally measured as the mass per time flowing from any of a number of types of containers (cylinders, funnels, hoppers). Measurement of the flow rate can be in discrete increments or continuous.

Basic methods for flow through an orifice

There are a variety of methods described in the literature. The most common for determining the flow rate through an orifice can be classified based on 3 important experimental variables:

- the type of container used to contain the powder. Common containers are cylinders, funnels, and hoppers from production equipment;
- the size and shape of the orifice used. The orifice diameter and shape are critical factors in determining powder flow rate;
- the method of measuring powder flow rate. Flow rate can be measured continuously using an electronic balance with some sort of recording device (strip chart recorder, computer). It can also be measured in discrete samples (for example, the time it takes for 100 g of powder to pass through the orifice to the nearest tenth of a second or the amount of powder passing through the orifice in 10 s to the nearest tenth of a gram).

Variations in methods for flow through an orifice

Either mass flow rate or volume flow rate can be determined. Mass flow rate is the easier of the methods, but it biases the results in favour of high-density materials. Since die fill is volumetric, determining volume flow rate may be preferable. A vibrator is occasionally attached to facilitate flow from the container, however, this appears to complicate interpretation of results. A moving orifice device has been proposed to more closely simulate rotary press conditions. The minimum diameter orifice through which powder flows can also be identified.

General scale of flowability for flow through an orifice

No general scale is available because flow rate is critically dependent on the method used to measure it. Comparison between published results is difficult.

Experimental considerations for flow through an orifice

Flow rate through an orifice is not an intrinsic property of the powder. It is very much dependent upon the methodology used. The existing literature points out several important considerations affecting these methods:

- the diameter and shape of the orifice,
- the type of container material (metal, glass, plastic),
- the diameter and height of the powder bed.

Recommended procedure for flow through an orifice

Flow rate through an orifice can be used only for materials that have some capacity to flow. It is not useful for cohesive materials. Provided that the height of the powder bed (the 'head' of powder) is much greater than the diameter of the orifice, the flow rate is virtually independent of the powder head. It is advisable to use a cylinder as the container, because the walls of the container must have little effect on flow. This configuration results in flow rate being determined by the movement of powder over powder, rather than powder along the wall of the container. Powder flow rate often increases when the height of the powder column is less than twice the diameter of the column. The orifice must be circular and the cylinder must be free of vibration. General guidelines for dimensions of the cylinder are as follows:

- diameter of the opening greater than 6 times the diameter of the particles,
- diameter of the cylinder greater than twice the diameter of the opening.

Use of a hopper as the container may be appropriate and representative of flow in a production situation. It is not advisable to use a funnel, particularly one with a stem, because flow rate will be determined by the size and length of the stem

as well as the friction between the stem and the powder. A truncated cone may be appropriate, but flow will be influenced by the powder-wall friction coefficient, thus, selection of an appropriate construction material is important.

For the opening in the cylinder, use a flat-faced bottom plate with the option to vary orifice diameter to provide maximum flexibility and better ensure a powder-over-powder flow pattern. Rate measurement can be either discrete or continuous. Continuous measurement using an electronic balance can more effectively detect momentary flow rate variations.

SHEAR CELL METHODS

In an effort to put powder flow studies and hopper design on a more fundamental basis, a variety of powder shear testers and methods that permit more thorough and precisely defined assessment of powder flow properties have been developed. Shear cell methodology has been used extensively in the study of pharmaceutical materials. From these methods, a wide variety of parameters can be obtained, including the yield loci representing the shear stress-shear strain relationship, the angle of internal friction, the unconfined yield strength, the tensile strength, and a variety of derived parameters such as the flow factor and other flowability indices. Because of the ability to control experimental parameters more precisely, flow properties can also be determined as a function of consolidation load, time, and other environmental conditions. These methods have been successfully used to determine critical hopper and bin parameters.

Basic methods for shear cell

One type of shear cell is the cylindrical shear cell which is split horizontally, forming a shear plane between the lower stationary base and the upper moveable portion of the shear cell ring. After powder bed consolidation in the shear cell (using a well-defined procedure), the force necessary to shear the powder bed by moving the upper ring is determined. Annular shear cell designs offer some advantages over the cylindrical shear cell design, including the need for less material. A disadvantage, however, is that because of its design, the powder bed is not sheared as uniformly because material on the outside of the annulus is sheared more than material in the inner region. A third type of shear cell (plate-type) consists of a thin sandwich of powder between a lower stationary rough surface and an upper rough surface that is moveable.

All of the shear cell methods have their advantages and disadvantages, but a detailed review is beyond the scope of this chapter. As with the other methods for characterising powder flow, many variations are described in the literature. A significant advantage of shear cell methodology in general is a greater degree of experimental control. The methodology generally is rather time-consuming and requires significant amounts of material and a well-trained operator.

Recommendations for shear cell

The many existing shear cell configurations and test methods provide a wealth of data and can be used very effectively to characterise powder flow. They are also helpful in the design of equipment such as hoppers and bins. Because of the diversity of available equipment and experimental procedures, no specific recommendations regarding methodology are presented in this chapter. It is recommended that the results of powder flow characterisation using shear cell methodology include a complete description of equipment and methodology used.

01/2010:20937

2.9.37. OPTICAL MICROSCOPY *(18)*

Optical microscopy for particle characterisation can generally be applied to particles of 1 µm and greater. The lower limit is imposed by the resolving power of the microscope. The upper limit is less definite and is determined by the increased difficulty associated with the characterisation of larger particles. Various alternative techniques are available for particle characterisation outside the applicable range of optical microscopy. Optical microscopy is particularly useful for characterising particles that are not spherical. This method may also serve as a base for the calibration of faster and more routine methods that may be developed.

Apparatus. Use a microscope that is stable and protected from vibration. The microscope magnification (product of the objective magnification, ocular magnification, and additional magnifying components) must be sufficient to allow adequate characterisation of the smallest particles to be classified in the test sample. The greatest numerical aperture of the objective is sought for each magnification range. Polarising filters may be used in conjunction with suitable analysers and retardation plates. Colour filters of relatively narrow spectral transmission are used with achromatic objectives, and are preferable with apochromats; they are required for appropriate colour rendition in photomicrography. Condensers, corrected at least for spherical aberration are used in the microscope substage and with the lamp. The numerical aperture of the substage condenser matches that of the objective under the conditions of use; this is affected by the actual aperture of the condenser diaphragm and the presence of immersion oils.

Adjustment. The precise alignment of all elements of the optical system and proper focusing are essential. The focusing of the elements is done in accordance with the recommendations of the microscope manufacturer. Critical axial alignment is recommended.

Illumination. A requirement for good illumination is a uniform and adjustable intensity of light over the entire field of view; Köhler illumination is preferred. With coloured particles, choose the colour of the filters so as to control the contrast and detail of the image.

Visual characterisation. The magnification and numerical aperture must be sufficiently high to allow adequate resolution of the images of the particles to be characterised. Determine the actual magnification using a calibrated stage micrometer to calibrate an ocular micrometer. Errors can be minimised if the magnification is sufficient that the image of the particle is at least 10 ocular divisions. Each objective must be calibrated separately. To calibrate the ocular scale, the stage micrometer scale and the ocular scale must be aligned. In this way, a precise determination of the distance between ocular stage divisions can be made. Several different magnifications may be necessary to characterise materials having a wide particle size distribution.

Photographic characterisation. If particle size is to be determined by photographic methods, take care to ensure that the object is sharply focused at the plane of the photographic emulsion. Determine the actual magnification by photographing a calibrated stage micrometer, using photographic film of sufficient speed, resolving power, and contrast. Exposure and processing must be identical for photographs of both the test sample and the determination of magnification. The apparent size of a photographic image is influenced by the exposure, development, and printing processes as well as by the resolving power of the microscope.

Preparation of the mount. The mounting medium will vary according to the physical properties of the test sample. Sufficient, but not excessive, contrast between the sample and

(18) This chapter has undergone pharmacopoeial harmonisation. See chapter *5.8. Pharmacopoeial harmonisation*.

the mounting medium is required to ensure adequate detail of the sample edge. The particles must rest in one plane and be adequately dispersed to distinguish individual particles of interest. Furthermore, the particles must be representative of the distribution of sizes in the material and must not be altered during preparation of the mount. Care must be taken to ensure that this important requirement is met. Selection of the mounting medium must include a consideration of the analyte solubility.

Crystallinity characterisation. The crystallinity of a material may be characterised to determine compliance with the crystallinity requirement where stated in the individual monograph of a drug substance. Unless otherwise specified in the individual monograph, mount a few particles of the sample in mineral oil on a clean glass slide. Examine the mixture using a polarising microscope: the particles show birefringence (interference colors) and extinction positions when the microscope stage is revolved.

Limit test of particle size by microscopy. Weigh a suitable quantity of the powder to be examined (for example, 10-100 mg), and suspend it in 10 mL of a suitable medium in which the powder does not dissolve, adding, if necessary, a wetting agent. A homogeneous suspension of particles can be maintained by suspending the particles in a medium of similar or matching density and by providing adequate agitation. Introduce a portion of the homogeneous suspension into a suitable counting cell, and scan under a microscope an area corresponding to not less than 10 µg of the powder to be examined. Count all the particles having a maximum dimension greater than the prescribed size limit. The size limit and the permitted number of particles exceeding the limit are defined for each substance.

Particle size characterisation. The measurement of particle size varies in complexity depending on the shape of the particle, and the number of particles characterised must be sufficient to ensure an acceptable level of uncertainty in the measured parameters. Additional information on particle size measurement, sample size, and data analysis is available, for example, in ISO 9276. For spherical particles, size is defined by the diameter. For irregular particles, a variety of definitions of particle size exist. In general, for irregularly shaped particles, characterisation of particle size must also include information on the type of diameter measured as well as information on particle shape. Several commonly used measurements of particle size are defined in Figure 2.9.37.-1.

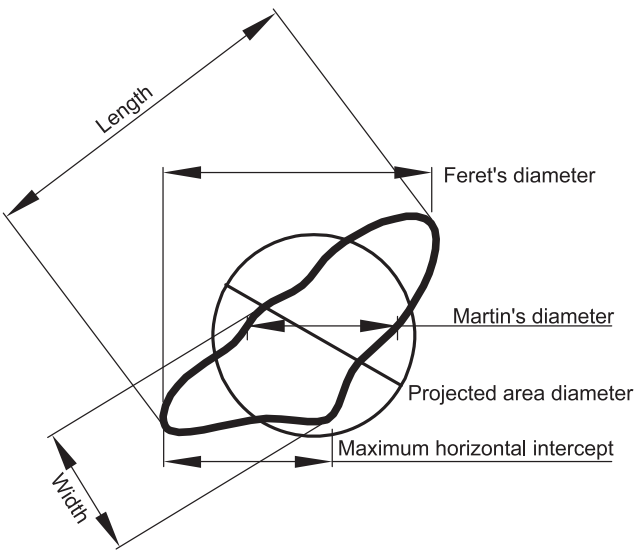

Figure 2.9.37.-1. – *Commonly used measurements of particle size*

- *Feret's diameter*: the distance between imaginary parallel lines tangent to a randomly oriented particle and perpendicular to the ocular scale,
- *Martin's diameter*: the diameter of the particle at the point that divides a randomly oriented particle into 2 equal projected areas,
- *projected area diameter*: the diameter of a circle that has the same projected area as the particle,
- *length*: the longest dimension from edge to edge of a particle oriented parallel to the ocular scale,
- *width*: the longest dimension of the particle measured at right angles to the length.

Particle shape characterisation. For irregularly shaped particles, characterisation of particle size must also include information on particle shape. The homogeneity of the powder must be checked using appropriate magnification. The following defines some commonly used descriptors of particle shape (see Figure 2.9.37.-2).

- *acicular*: slender, needle-like particle of similar width and thickness,
- *columnar*: long, thin particle with a width and thickness that are greater than those of an acicular particle,
- *flake*: thin, flat particle of similar length and width,
- *plate*: flat particle of similar length and width but with greater thickness than a flake particle,
- *lath*: long, thin, blade-like particle,
- *equant*: particle of similar length, width, and thickness; both cubical and spherical particles are included.

General observations. A particle is generally considered to be the smallest discrete unit. A particle may be a liquid or semi-solid droplet; a single crystal or polycrystalline; amorphous or an agglomerate. Particles may be associated. This degree of association may be described by the following terms:

- *lamellar*: stacked plates,
- *aggregate*: mass of adhered particles,
- *agglomerate*: fused or cemented particles,
- *conglomerate*: mixture of 2 or more types of particles,
- *spherulite*: radial cluster,
- *drusy*: particle covered with tiny particles.

Particle condition may be described by the following terms:

- *edges*: angular, rounded, smooth, sharp, fractured,
- *optical*: color (using proper color balancing filters), transparent, translucent, opaque,
- *defects*: occlusions, inclusions.

Surface characteristics may be described as:

- *cracked*: partial split, break, or fissure,
- *smooth*: free of irregularities, roughness, or projections,
- *porous*: having openings or passageways,
- *rough*: bumpy, uneven, not smooth,
- *pitted*: small indentations.

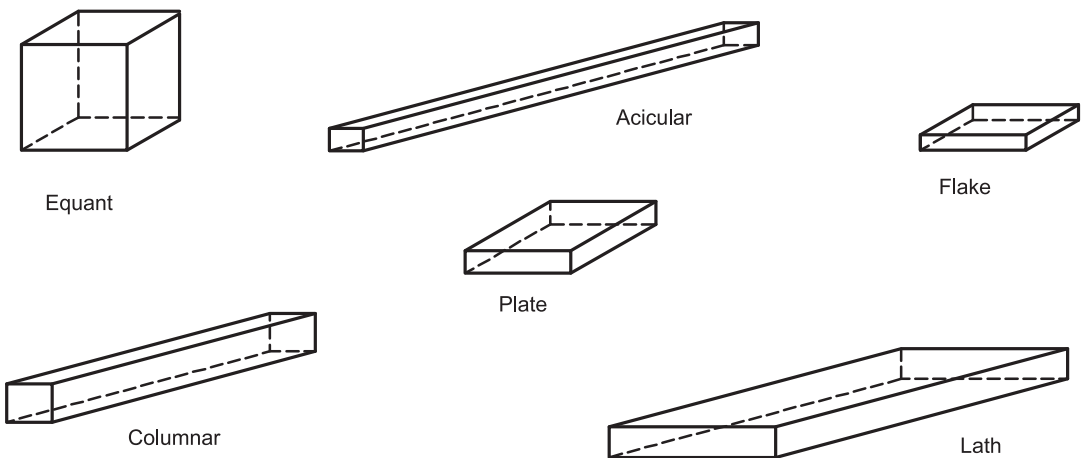

Figure 2.9.37.-2. – *Commonly used descriptions of particle shape*

01/2010:20938

2.9.38. PARTICLE-SIZE DISTRIBUTION ESTIMATION BY ANALYTICAL SIEVING[19]

Sieving is one of the oldest methods of classifying powders and granules by particle-size distribution. When using a woven sieve cloth, the sieving will essentially sort the particles by their intermediate size dimension (i.e. breadth or width). Mechanical sieving is most suitable where the majority of the particles are larger than about 75 µm. For smaller particles, their light weight provides insufficient force during sieving to overcome the surface forces of cohesion and adhesion that cause the particles to stick to each other and to the sieve, and thus cause particles that would be expected to pass through the sieve to be retained. For such materials other means of agitation such as air-jet sieving or sonic-sifter sieving may be more appropriate. Nevertheless, sieving can sometimes be used for some powders or granules having median particle sizes smaller than 75 µm where the method can be validated. In pharmaceutical terms, sieving is usually the method of choice for classification of the coarser grades of single powders or granules. It is a particularly attractive method in that powders and granules are classified only on the basis of particle size, and in most cases the analysis can be carried out in the dry state.

Among the limitations of the sieving method are the need for an appreciable amount of sample (normally at least 25 g, depending on the density of the powder or granule, and the diameter of the test sieves) and the difficulty in sieving oily or other cohesive powders or granules that tend to clog the sieve openings. The method is essentially a two-dimensional estimate of size because passage through the sieve aperture is frequently more dependent on maximum width and thickness than on length.

This method is intended for estimation of the total particle-size distribution of a single material. It is not intended for determination of the proportion of particles passing or retained on 1 or 2 sieves.

Estimate the particle-size distribution as described under Dry sieving method, unless otherwise specified in the individual monograph. Where difficulty is experienced in reaching the endpoint (i.e. material does not readily pass through the sieves) or when it is necessary to use the finer end of the sieving range (below 75 µm), serious consideration must be given to the use of an alternative particle-sizing method.

Sieving is carried out under conditions that do not cause the test sample to gain or lose moisture. The relative humidity of the environment in which the sieving is carried out must be controlled to prevent moisture uptake or loss by the sample. In the absence of evidence to the contrary, analytical test sieving is normally carried out at ambient humidity. Any special conditions that apply to a particular material must be detailed in the individual monograph.

Principles of analytical sieving. Analytical test sieves are constructed from a woven-wire mesh, which is of simple weave that is assumed to give nearly square apertures and is joined to the base of an open cylindrical container. The basic analytical method involves stacking the sieves on top of one another in ascending degrees of coarseness, and then placing the test powder on the top sieve. The nest of sieves is subjected to a standardised period of agitation, and then the mass of material retained on each sieve is accurately determined. The test gives the mass percentage of powder in each sieve size range.

This sieving process for estimating the particle-size distribution of a single pharmaceutical powder is generally intended for use where at least 80 per cent of the particles are larger than 75 µm. The size parameter involved in determining particle-size distribution by analytical sieving is the length of the side of the minimum square aperture through which the particle will pass.

TEST SIEVES

Test sieves suitable for pharmacopoeial tests conform to the current edition of *ISO 3310-1: Test sieves – Technical requirements and testing - Part 1: Test sieves of metal wire cloth* (see Table 2.9.38.-1). Unless otherwise specified in the monograph, use those ISO sieves listed as principal sizes in Table 2.9.38.-1 that are recommended in the particular region.

Sieves are selected to cover the entire range of particle sizes present in the test sample. A nest of sieves having a $\sqrt{2}$ progression of the area of the sieve openings is recommended. The nest of sieves is assembled with the coarsest screen at the top and the finest at the bottom. Use micrometres or millimetres in denoting test sieve openings.

Test sieves are made from stainless steel or, less preferably, from brass or another suitable non-reactive wire.

Calibration and recalibration of test sieves is in accordance with the current edition of ISO 3310-1. Sieves are carefully examined for gross distortions and fractures, especially at their screen frame joints, before use. Sieves may be calibrated optically to estimate the average opening size, and opening variability, of the sieve mesh. Alternatively, for the evaluation of the effective opening of test sieves in the size range of 212-850 µm, standard glass spheres are available. Unless otherwise specified in the individual monograph, perform the sieve analysis at controlled room temperature and at ambient relative humidity.

(19) This chapter has undergone pharmacopoeial harmonisation. See chapter *5.8. Pharmacopoeial harmonisation*.

Table 2.9.38.-1.

ISO Nominal Aperture			US Sieve No.	Recom-mended USP Sieves (µm)	European Sieve No.	Japanese Sieve No.
Principal sizes	Supplementary sizes					
R 20/3	R 20	R 40/3				
11.20 mm	11.20 mm	11.20 mm			11 200	
	10.00 mm					
		9.50 mm				
	9.00 mm					
8.00 mm	8.00 mm	8.00 mm				
	7.10 mm					
		6.70 mm				
	6.30 mm					
5.60 mm	5.60 mm	5.60 mm			5600	3.5
	5.00 mm					
		4.75 mm				4
	4.50 mm					
4.00 mm	4.00 mm	4.00 mm	5	4000	4000	4.7
	3.55 mm					
		3.35 mm	6			5.5
	3.15 mm					
2.80 mm	2.80 mm	2.80 mm	7	2800	2800	6.5
	2.50 mm					
		2.36 mm	8			7.5
	2.24 mm					
2.00 mm	2.00 mm	2.00 mm	10	2000	2000	8.6
	1.80 mm					
		1.70 mm	12			10
	1.60 mm					
1.40 mm	1.40 mm	1.40 mm	14	1400	1400	12
	1.25 mm					
		1.18 mm	16			14
	1.12 mm					
1.00 mm	1.00 mm	1.00 mm	18	1000	1000	16
	900 µm					
		850 µm	20			18
	800 µm					
710 µm	710 µm	710 µm	25	710	710	22
	630 µm					
		600 µm	30			26
	560 µm					
500 µm	500 µm	500 µm	35	500	500	30
	450 µm					
		425 µm	40			36
	400 µm					
355 µm	355 µm	355 µm	45	355	355	42
	315 µm					
		300 µm	50			50
	280 µm					
250 µm	250 µm	250 µm	60	250	250	60
	224 µm					
		212 µm	70			70
	200 µm					
180 µm	180 µm	180 µm	80	180	180	83
	160 µm					
		150 µm	100			100
	140 µm					
125 µm	125 µm	125 µm	120	125	125	119
	112 µm					
		106 µm	140			140
	100 µm					
90 µm	90 µm	90 µm	170	90	90	166
	80 µm					
		75 µm	200			200
	71 µm					
63 µm	63 µm	63 µm	230	63	63	235
	56 µm					
		53 µm	270			282
	50 µm					
45 µm	45 µm	45 µm	325	45	45	330
	40 µm					
		38 µm			38	391

Cleaning test sieves. Ideally, test sieves are cleaned using only a low-pressure air jet or a liquid stream. If some apertures remain blocked by test particles, careful gentle brushing may be used as a last resort.

Test sample. If the test sample mass is not given in the monograph for a particular material, use a test sample having a mass of 25-100 g, depending on the bulk density of the material, for test sieves having a 200 mm diameter. For 76 mm sieves, the amount of material that can be accommodated is approximately 1/7 that which can be accommodated by a 200 mm sieve. Determine the most appropriate mass for a given material by test sieving accurately weighed samples of different masses, such as 25 g, 50 g and 100 g, for the same time period on a mechanical shaker (note: if the test results are similar for the 25 g and 50 g samples, but the 100 g sample shows a lower percentage through the finest sieve, the 100 g sample size is too large). Where only a sample of 10-25 g is available, smaller diameter test sieves conforming to the same mesh specifications may be substituted, but the endpoint must be redetermined. The use of test samples having a smaller mass (e.g. down to 5 g) may be needed. For materials with low apparent particle density, or for materials mainly comprising particles with a highly iso-diametrical shape, sample masses below 5 g for a 200 mm screen may be necessary to avoid excessive blocking of the sieve. During validation of a particular sieve-analysis method, it is expected that the problem of sieve blocking will have been addressed.

If the test material is prone to absorbing or losing significant amounts of water with varying humidity, the test must be carried out in an appropriately controlled environment. Similarly, if the test material is known to develop an

electrostatic charge, careful observation must be made to ensure that such charging does not influence the analysis. An antistatic agent, such as colloidal silicon dioxide and/or aluminum oxide, may be added at a 0.5 per cent (*m/m*) level to minimise this effect. If both of the above effects cannot be eliminated, an alternative particle-sizing technique must be selected.

Agitation methods. Several different sieve and powder-agitation devices are commercially available, all of which may be used to perform sieve analyses. However, the different methods of agitation may give different results for sieve analyses and endpoint determinations because of the different types and magnitudes of the forces acting on the individual particles under test. Methods using mechanical agitation or electromagnetic agitation, and that can induce either a vertical oscillation or a horizontal circular motion, or tapping or a combination of both tapping and horizontal circular motion are available. Entrainment of the particles in an air stream may also be used. The results must indicate which agitation method was used and the agitation parameters used (if they can be varied), since changes in the agitation conditions will give different results for the sieve analysis and endpoint determination, and may be sufficiently different to give a failing result under some circumstances.

Endpoint determination. The test sieving analysis is complete when the mass on any of the test sieves does not change by more than 5 per cent or 0.1 g (10 per cent in the case of 76 mm sieves) of the previous mass on that sieve. If less than 5 per cent of the total sample mass is present on a given sieve, the endpoint for that sieve is increased to a mass change of not more than 20 per cent of the previous mass on that sieve.

If more than 50 per cent of the total sample mass is found on any one sieve, unless this is indicated in the monograph, the test is repeated, but with the addition to the sieve nest of a more coarse sieve intermediate between that carrying the excessive mass and the next coarsest sieve in the original nest, i.e. addition of the ISO series sieve omitted from the nest of sieves.

SIEVING METHODS

Mechanical agitation (Dry sieving method). Tare each test sieve to the nearest 0.1 g. Place an accurately weighed quantity of test sample on the top (coarsest) sieve, and replace the lid. Agitate the nest of sieves for 5 min, then carefully remove each sieve from the nest without loss of material. Reweigh each sieve, and determine the mass of material on each one. Determine the mass of material in the collecting pan in a similar manner. Re-assemble the nest of sieves, and agitate for 5 min. Remove and weigh each sieve as previously described. Repeat these steps until the endpoint criteria are met (see Endpoint determination under Test sieves). Upon completion of the analysis, reconcile the masses of material. Total loss must not exceed 5 per cent of the mass of the original test sample.

Repeat the analysis with a fresh sample, but using a single sieving time equal to that of the combined times used above. Confirm that this sieving time conforms to the requirements for endpoint determination. When this endpoint has been validated for a specific material, then a single fixed time of sieving may be used for future analyses, providing the particle-size distribution falls within normal variation.

If there is evidence that the particles retained on any sieve are aggregates rather than single particles, the use of mechanical dry sieving is unlikely to give good reproducibility, and a different particle-size analysis method must be used.

Air-entrainment methods (Air-jet and sonic-sifter sieving). Different types of commercial equipment that use a moving air current are available for sieving. A system that uses a single sieve at a time is referred to as air-jet sieving. It uses the same general sieving methodology as that described under Dry sieving method, but with a standardised air jet replacing the normal agitation mechanism. It requires sequential analyses on individual sieves starting with the finest sieve to obtain a particle-size distribution. Air-jet sieving often includes the use of finer test sieves than used in ordinary dry sieving. This technique is more suitable where only oversize or undersize fractions are needed.

In the sonic-sifter method, a nest of sieves is used, and the test sample is carried in a vertically oscillating column of air that lifts the sample and then carries it back against the mesh openings at a given number of pulses per minute. It may be necessary to lower the sample amount to 5 g when sonic sifting is employed.

The air-jet sieving and sonic-sifter sieving methods may be useful for powders or granules when the mechanical sieving techniques are incapable of giving a meaningful analysis.

These methods are highly dependent upon proper dispersion of the powder in the air current. This requirement may be hard to achieve if the method is used at the lower end of the sieving range (i.e. below 75 µm), when the particles tend to be more cohesive, and especially if there is any tendency for the material to develop an electrostatic charge. For the above reasons endpoint determination is particularly critical, and it is very important to confirm that the oversize material comprises single particles and is not composed of aggregates.

INTERPRETATION

The raw data must include the mass of the test sample, the total sieving time, the precise sieving methodology, and the set values for any variable parameters, in addition to the masses retained on the individual sieves and in the pan.

It may be convenient to convert the raw data into a cumulative mass distribution, and if it is desired to express the distribution in terms of a cumulative mass undersize, the range of sieves used must include a sieve through which all the material passes. If there is evidence on any of the test sieves that the material remaining on it is composed of aggregates formed during the sieving process, the analysis is invalid.

04/2011:20939

2.9.39. WATER-SOLID INTERACTIONS: DETERMINATION OF SORPTION-DESORPTION ISOTHERMS AND OF WATER ACTIVITY

INTRODUCTION

Pharmaceutical solids as raw materials or as constituents of dosage forms most often come in contact with water during processing and storage. This may occur (a) during crystallisation, lyophilisation, wet granulation, or spray drying; and (b) because of exposure upon handling and storage to an atmosphere containing water vapour or exposure to other materials in a dosage form that contain water capable of distributing it to other ingredients. Some properties known to be altered by the association of solids with water include rates of chemical degradation in the "solid-state", crystal growth and dissolution, dispersibility and wetting, powder flow, lubricity, powder compactibility, compact hardness and microbial contamination.

Although precautions can be taken when water is perceived to be a problem, i.e. eliminating all moisture, reducing contact with the atmosphere, or controlling the relative humidity of the atmosphere, such precautions generally add expense to the process with no guarantee that during the life of the product further problems associated with moisture will be avoided. It is also important to recognise that there are many situations where a certain level of water in a solid is required for proper performance, e.g. powder compaction. It is essential for both

reasons, therefore, that as much as possible is known about the effects of moisture on solids before strategies are developed for their handling, storage and use.

Some of the more critical pieces of required information concerning water-solid interactions are:

- total amount of water present;
- the extent to which adsorption and absorption occur;
- whether or not hydrates form;
- specific surface area of the solid, as well as such properties as degree of crystallinity, degree of porosity, and glass transition and melting temperature;
- site of water interaction, the extent of binding, and the degree of molecular mobility;
- effects of temperature and relative humidity;
- essentially irreversible hydration;
- kinetics of moisture uptake;
- various factors that might influence the rate at which water vapour can be taken up by a solid;
- for water-soluble solids capable of being dissolved by the sorbed water, under which conditions dissolution will take place.

PHYSICAL STATES OF SORBED WATER

Water can physically interact with solids in different ways. It can interact at the surface (adsorption) or it can penetrate the bulk solid structure (absorption). When both adsorption and absorption occur, the term sorption is often used. Adsorption is particularly critical in affecting the properties of solids when the specific surface area is large. Large values of specific surface area are seen with solids having very small particles, as well as with solids having a high degree of intraparticle porosity. Absorption is characterised by an association of water per gram of solid that is much greater than that which can form a monomolecular layer on the available surface, and an amount that is generally independent of the specific surface area.

Most crystalline solids will not absorb water into their bulk structures because of the close packing and high degree of order of the crystal lattice. Indeed, it has been shown that the degree of absorption into solids exhibiting partial crystallinity and partial amorphous structure is often inversely proportional to the degree of crystallinity. With some crystalline solids, however, crystal hydrates may form. These hydrates may exhibit a stoichiometric relationship, in terms of water molecules bound per solid molecule, or they may be non-stoichiometric. Upon dehydration, crystal hydrates may either retain their original crystal structure, or lose their crystallinity and become amorphous, or transform into a new anhydrous or less-hydrated crystal form.

Amorphous or partially amorphous solids are capable of taking up significant amounts of water because there is sufficient molecular disorder in the solid to permit penetration, swelling or dissolution. Such behaviour is observed with most amorphous polymers and with small-molecular-mass solids rendered amorphous during preparation, e.g. by lyophilisation, or after milling. The introduction of defects into highly crystalline solids will also produce this behaviour. The greater the chemical affinity of water for the solid, the greater the total amount that can be absorbed. When water is absorbed by amorphous solids, the bulk properties of the solid can be significantly altered. It is well established, for example, that amorphous solids, depending on the temperature, can exist in at least one of 2 states, "glassy" or "fluid"; the temperature at which one state transforms into the other is the glass transition temperature, T_g.

Water absorbed into the bulk solid structure, by virtue of its effect on the free volume of the solid, can act as an efficient plasticiser and reduce the value of T_g. Since the rheological properties of "fluid" and "glassy" states are quite different, i.e. the "fluid" state exhibits much less viscosity as one goes increasingly above the glass transition temperature, it is not surprising that a number of important bulk properties dependent on the rheology of the solid are affected by moisture content. Since amorphous solids are metastable relative to the crystalline form of the material, with small-molecular-mass materials, it is possible for absorbed moisture to initiate reversion of the solid to the crystalline form, particularly if the solid is transformed by the sorbed water to a "fluid" state. This is the basis of "cake collapse" often observed during the lyophilisation process. An additional phenomenon noted specifically with water-soluble solids is their tendency to deliquesce, i.e. to dissolve in their own sorbed water, at relative humidities, RH_i, in excess of the relative humidity of a saturated solution of the solid, RH_0. Deliquescence arises because of the high water solubility of the solid and the significant effect it has on the colligative properties of water. It is a dynamic process that continues to occur as long as RH_i is greater than RH_0.

The key to understanding the effects water can have on the properties of solids, and vice versa, rests with an understanding of the location of the water molecule and its physical state. More specifically, water associated with solids can exist in a state that is directly bound to the solid, as well as in a state of mobility approaching that of bulk water. This difference in mobility has been observed through such measurements as heats of sorption, freezing point, nuclear magnetic resonance, dielectric properties and diffusion. Such changes in mobility have been interpreted as arising because of changes in the thermodynamic state of water as more and more water is sorbed. Thus, water bound directly to a solid is often thought as unavailable to affect the properties of the solid, whereas larger amounts of sorbed water may become more clustered and form water more like that exhibiting solvent properties. In the case of crystal hydrates, the combination of intermolecular forces (hydrogen bonding) and crystal packing can produce very strong water-solid interactions. Recognising that the presence of water in an amorphous solid can affect the glass transition temperature and hence the physical state of the solid, at low levels of water, most polar amorphous solids are in a highly viscous glassy state because of their high values of T_g. Hence, water is "frozen" into the solid structure and is rendered immobile by the high viscosity, e.g. 10^{13} Pa·s. As the amount of water sorbed increases and T_g decreases, approaching ambient temperatures, the glassy state approaches that of a "fluid" state and water mobility along with the mobility of the solid itself increases significantly. At high *RH*, the degree of water plasticisation of the solid can be sufficiently high so that water and the solid can now achieve significant amounts of mobility. In general, therefore, this picture of the nature of sorbed water helps to explain the rather significant effect moisture can have on a number of bulk properties of solids such as chemical reactivity and mechanical deformation. It suggests strongly that methods of evaluating chemical and physical stability of solids and solid dosage forms take into account the effects water can have on the solid when it is sorbed, particularly when it enters the solid structure and acts as a plasticiser.

Rates of water uptake. The rate and extent to which solids exposed to the atmosphere might either sorb or desorb water vapour can be a critical factor in the handling of solids. Even the simple act of weighing out samples of solid on an analytical balance and the exposure, therefore, of a thin layer of powder to the atmosphere for a few minutes can lead to significant error in, for example, the estimation of loss on drying values. It is well established that water-soluble solids exposed to relative humidities above that exhibited by a saturated solution of that solid will spontaneously dissolve via deliquescence and continue to dissolve over a long time period. The rate of water uptake in general depends on a number of parameters not found to be critical in equilibrium measurements because rates of sorption are primarily mass-transfer controlled with some contributions from heat-transfer mechanisms.

Thus, factors such as vapour diffusion coefficients in air and in the solid, convective airflow, and the surface area and geometry of the solid bed and surrounding environment, can play an important role. Indeed, the method used to make measurements can often be the rate-determining factor because of these environmental and geometric factors.

DETERMINATION OF SORPTION-DESORPTION ISOTHERMS

Principle. The tendency to take up water vapour is best assessed by measuring sorption or desorption as a function of relative humidity, at constant temperature, and under conditions where sorption or desorption is essentially occurring independently of time, i.e. equilibrium. Relative humidity, *RH*, is defined by the following expression:

$$\frac{P_c}{P_0} \times 100$$

P_c = pressure of water vapour in the system;

P_0 = saturation pressure of water vapour under the same conditions.

The ratio P_c/P_0 is referred to as the relative pressure. Sorption or water uptake is best assessed starting with dried samples and subjecting them to a known relative humidity. Desorption is studied by beginning with a system already containing sorbed water and reducing the relative humidity. As the name indicates, the sorption-desorption isotherm is valid only for the reference temperature, hence a special isotherm exists for each temperature. Ordinarily, at equilibrium, moisture content at a particular relative humidity must be the same, whether determined from sorption or desorption measurements. However, it is common to see sorption-desorption hysteresis.

Methods. Samples may be stored in chambers at various relative humidities (Figure 2.9.39.-1). The mass gained or lost for each sample is then measured. The major advantage of this method is convenience, while the major disadvantages are the slow rate of reaching constant mass, particularly at high relative humidities, and the error introduced in opening and closing the chamber for weighing.

Dynamic gravimetric water sorption systems allow the on-line weighing of a sample in a controlled system to assess the interaction of the material with moisture at various programmable levels of relative humidity at a constant temperature. The major benefit of a controlled system is that isothermal conditions can be more reliably established and that the dynamic response of the sample to changing conditions can be monitored. Data points for the determination of the sorption isotherm (e.g. from 0 per cent to approximately 95 per cent *RH*, non condensing) are only taken after a sufficiently constant signal indicates that the sample has reached equilibrium at a given level of humidity. In some cases (e.g. deliquescence), the maximum time may be restricted although the equilibrium level is not reached. The apparatus must adequately control the temperature to ensure a good baseline stability as well as accurate control of the relative humidity generation. The required relative humidities can be generated, e.g. by accurately mixing dry and saturated vapour gas with flow controllers. The electrostatic behaviour of the powder must also be considered. The verification of the temperature and the relative humidity (controlled with, for example, a certified hygrometer, certified salt solutions or deliquescence points of certified salts over an adequate range), must be consistent with the instrument specification. The balance must provide a sufficient mass resolution and long term stability.

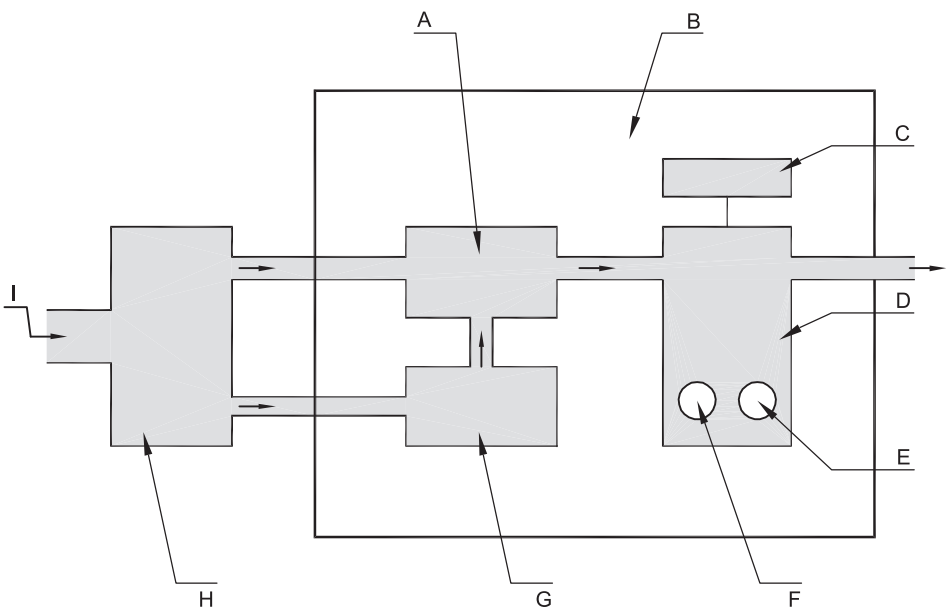

A. Humidity controller
B. Temperature controlled chamber
C. Balance module
D. Humidity regulated module
E. Reference
F. Sample
G. Vapour humidifier
H. Flow control module
I. Dry gas

Figure 2.9.39.-1. – *Example of an apparatus for the determination of the water sorption (other designs are possible)*

It is also possible to measure amounts of water uptake not detectable gravimetrically using volumetric techniques. In some cases, direct analysis of water content by different methods such as determination of the boiling point, determination of water by distillation, loss on drying or gas chromatography may be advantageous. In the case of adsorption, to improve sensitivity, one can increase the specific surface area of the sample by reducing particle size or by using larger samples to increase the total area. It is important, however, that such comminution of the solid does not alter the surface structure of the solid or render it more amorphous or otherwise less ordered in crystallinity. For absorption, where water uptake is independent of specific surface area, only increasing sample size will help. Increasing sample size, however, will increase the time to establish some type of equilibrium. To establish accurate values, it is important to get desolvation of the sample as thoroughly as possible. Higher temperatures and lower pressures (vacuum) facilitate this process; however, one must be aware of any adverse effects this might have on the solid such as dehydration, chemical degradation or sublimation. Using higher temperatures to induce desorption, as in a thermogravimetric apparatus, likewise must be carefully carried out because of these possible pitfalls.

Report and interpretation of the data. Sorption data are usually reported as a graph of the apparent mass change in per cent of the mass of the dry sample as a function of relative humidity or time. Sorption isotherms are reported both in tabular form and as a graph. The measurement method must be traceable with the data.

Adsorption-desorption hysteresis can be interpreted, for example, in terms of the porosity of the sample, its state of agglomeration (capillary condensation), the formation of hydrates, polymorphic change, or liquefying of the sample. Certain types of systems, particularly those with microporous solids and amorphous solids, are capable of sorbing large amounts of water vapour. Here, the amount of water associated with the solid as relative humidity is decreased, is greater than the amount that originally sorbed as the relative humidity was increased. For microporous solids, vapour adsorption-desorption hysteresis is an equilibrium phenomenon associated with the process of capillary condensation. This takes place because of the high degree of irregular curvature of the micropores and the fact that they "fill" (adsorption) and "empty" (desorption) under different equilibrium conditions. For non-porous solids capable of absorbing water, hysteresis occurs because of a change in the degree of vapour-solid interaction due to a change in the equilibrium state of the solid, e.g. conformation of polymer chains, or because the time scale for structural equilibrium is longer than the time scale for water desorption. In measuring sorption-desorption isotherms, it is therefore important to establish that something close to an equilibrium state has been reached. Particularly with hydrophilic polymers at high relative humidities, the establishment of water sorption or desorption values independent of time is quite difficult, since one is usually dealing with a polymer plasticised into its "fluid" state, where the solid is undergoing significant change.

In the case of crystal hydrate formation, the plot of water uptake versus pressure or relative humidity will in these cases exhibit a sharp increase in uptake at a particular pressure and the amount of water taken up will usually exhibit a stoichiometric mole:mole ratio of water to solid. In some cases, however, crystal hydrates will not appear to undergo a phase change or the anhydrous form will appear amorphous. Consequently, water sorption or desorption may appear more like that seen with adsorption processes. X-ray crystallographic analysis and thermal analysis are particularly useful for the study of such systems.

For situations where water vapour adsorption occurs predominantly, it is very helpful to measure the specific surface area of the solid by an independent method and to express adsorption as mass of water sorbed per unit area of solid surface. This can be very useful in assessing the possible importance of water sorption in affecting solid properties. For example, 0.5 per cent *m/m* uptake of water could hardly cover the bare surface of 100 m^2/g, while for 1.0 m^2/g this amounts to 100 times more surface coverage. In the case of pharmaceutical solids which have a specific surface area in the range of 0.01 m^2/g to 10 m^2/g, what appears to be low water content could represent a significant amount of water for the available surface. Since the "dry surface area" is not a factor in absorption, sorption of water with amorphous or partially amorphous solids can be expressed on the basis of unit mass corrected for crystallinity, when the crystal form does not sorb significant amounts of water relative to the amorphous regions.

DETERMINATION OF THE WATER ACTIVITY

Principle. Water activity, A_w, is the ratio of vapour pressure of water in the product (P) to saturation pressure of water vapour (P_0) at the same temperature. It is numerically equal to 1/100 of the relative humidity (*RH*) generated by the product in a closed system. *RH* can be calculated from direct measurements of partial vapour pressure or dew point, or from indirect measurement by sensors whose physical or electric characteristics are altered by the *RH* to which they are exposed. Ignoring activity coefficients, the relationship between A_w and equilibrium relative humidity (*ERH*) are represented by the following equations:

$$A_w = \frac{P}{P_0}$$

$$ERH \text{ (per cent)} = A_w \times 100$$

Method. The water activity is determined by placing the sample in a small airtight cup inside which the equilibrium between the water in the solid and the headspace can be established. The volume of the headspace must be small in relation to the sample volume in order not to change the sorption state of sample during the test. The equilibration as a thermodynamic process takes time but may be accelerated by forced circulation within the cell. The acquired water activity value is only valid for the simultaneously determined temperature. This requires a precise temperature-measuring device as part of the equipment. Furthermore, the probe must be thermally insulated to guarantee a constant temperature during the test. The sensor measuring the humidity of the headspace air above the sample is a key component. Theoretically, all types of hygrometers can be used, but for analytical purposes miniaturisation and robustness are a precondition. The A_w measurement may be conducted using the dew point/chilled mirror method[20]. A polished, chilled mirror is used as a condensing surface. The cooling system is electronically linked to a photoelectric cell into which light is reflected from the condensing mirror. An air stream, in equilibrium with the test sample, is directed at the mirror, which cools until condensation occurs on the mirror. The temperature at which this condensation begins is the dew point from which the *ERH* is determined. Commercially available instruments using the dew point/chilled mirror method or other technologies need to be evaluated for suitability, qualified, and calibrated when used to make water activity

(20) AOAC International Official Method 978.18.

determinations. These instruments are typically calibrated over an adequate range, for example, using some saturated salt solutions at 25 °C such as those listed in Table 2.9.39.-1.

Table 2.9.39.-1. – *Standard saturated salt solutions*

Saturated salts solutions at 25 °C	*ERH* (per cent)	A_w
Potassium sulfate (K_2SO_4)	97.3	0.973
Barium chloride ($BaCl_2$)	90.2	0.902
Sodium chloride (NaCl)	75.3	0.753
Magnesium nitrate ($Mg(NO_3)_2$)	52.9	0.529
Magnesium chloride ($MgCl_2$)	32.8	0.328
Lithium chloride (LiCl)	11.2	0.112

04/2012:20940

2.9.40. UNIFORMITY OF DOSAGE UNITS

To ensure the consistency of dosage units, each unit in a batch should have an active substance content within a narrow range around the label claim. Dosage units are defined as dosage forms containing a single dose or a part of a dose of an active substance in each dosage unit. Unless otherwise stated, the uniformity of dosage units specification is not intended to apply to suspensions, emulsions or gels in single-dose containers intended for cutaneous administration. The test for content uniformity is not required for multivitamin and trace-element preparations.

The term 'uniformity of dosage unit' is defined as the degree of uniformity in the amount of the active substance among dosage units. Therefore, the requirements of this chapter apply to each active substance being comprised in dosage units containing one or more active substances, unless otherwise specified elsewere in this Pharmacopoeia.

The uniformity of dosage units can be demonstrated by either of 2 methods: content uniformity or mass variation (see Table 2.9.40.-1).

The test for content uniformity of preparations presented in dosage units is based on the assay of the individual contents of active substance(s) of a number of dosage units to determine whether the individual contents are within the limits set. The content uniformity method may be applied in all cases.

The test for mass variation is applicable for the following dosage forms:

(1) solutions enclosed in single-dose containers and in soft capsules;

(2) solids (including powders, granules and sterile solids) that are packaged in single-dose containers and contain no added active or inactive substances;

(3) solids (including sterile solids) that are packaged in single-dose containers, with or without added active or inactive substances, that have been prepared from true solutions and freeze-dried in the final containers and are labelled to indicate this method of preparation;

(4) hard capsules, uncoated tablets, or film-coated tablets, containing 25 mg or more of an active substance comprising 25 per cent or more, by mass, of the dosage unit or, in the case of hard capsules, the capsule contents, except that uniformity of other active substances present in lesser proportions is demonstrated by meeting content uniformity requirements.

The test for content uniformity is required for all dosage forms not meeting the above conditions for the mass variation test. Alternatively, products that do not meet the 25 mg/25 per cent threshold limit may be tested for uniformity of dosage units by mass variation instead of the content uniformity test on the following condition: the concentration Relative Standard Deviation (RSD) of the active substance in the final dosage units is not more than 2 per cent, based on process validation data and development data, and if there has been regulatory approval of such a change. The concentration RSD is the RSD of the concentration per dosage unit (*m/m* or *m/V*), where concentration per dosage unit equals the assay result per dosage unit divided by the individual dosage unit mass. See the RSD formula in Table 2.9.40.-2.

Table 2.9.40.-1. – *Application of Content Uniformity (CU) and Mass Variation (MV) test for dosage forms*

Dosage forms	Type	Sub-Type	Dose and ratio of active substance	
			≥ 25 mg and ≥ 25 per cent	< 25 mg or < 25 per cent
Tablets	uncoated		MV	CU
	coated	film-coated	MV	CU
		others	CU	CU
Capsules	hard		MV	CU
	soft	suspensions, emulsions, gels	CU	CU
		solutions	MV	MV
Solids in single-dose containers	single component		MV	MV
	multiple components	solution freeze-dried in final container	MV	MV
		others	CU	CU
Solutions enclosed in single-dose containers			MV	MV
Others			CU	CU

CONTENT UNIFORMITY

Select not fewer than 30 units, and proceed as follows for the dosage form designated. Where different procedures are used for assay of the preparation and for the content uniformity test, it may be necessary to establish a correction factor to be applied to the results of the latter.

Solid dosage forms. Assay 10 units individually using an appropriate analytical method. Calculate the acceptance value (see Table 2.9.40.-2).

Liquid or semi-solid dosage forms. Assay 10 units individually using an appropriate analytical method. Carry out the assay on the amount of well-mixed material that is removed from an individual container in conditions of normal use. Express the results as delivered dose. Calculate the acceptance value (see Table 2.9.40.-2).

Calculation of Acceptance Value

Calculate the Acceptance Value (*AV*) using the formula:

$$\left|M - \overline{X}\right| + ks$$

for which the terms are as defined in Table 2.9.40.-2.

MASS VARIATION

Carry out an assay for the active substance(s) on a representative sample of the batch using an appropriate analytical method. This value is result *A*, expressed as

Table 2.9.40.-2.

Variable	Definition	Conditions	Value
$\overline{X}$	Mean of individual contents (x_1, x_2,..., x_n), expressed as a percentage of the label claim		
x_1, x_2,..., x_n	Individual contents of the dosage units tested, expressed as a percentage of the label claim		
n	Sample size (number of dosage units in a sample)		
k	Acceptability constant	If n = 10, then	2.4
		If n = 30, then	2.0
s	Sample standard deviation		$\left[\frac{\sum_{i=1}^{n}(x_i - \overline{X})^2}{n-1}\right]^{1/2}$
RSD	Relative standard deviation		$\frac{100s}{\overline{X}}$
M (case 1) To be applied when $T \leq 101.5$	Reference value	If 98.5 per cent ≤ $\overline{X}$ ≤ 101.5 per cent, then	$M = \overline{X}$ ($AV = ks$)
		If $\overline{X}$ < 98.5 per cent, then	M = 98.5 per cent ($AV = 98.5 - \overline{X} + ks$)
		If $\overline{X}$ > 101.5 per cent, then	M = 101.5 per cent ($AV = \overline{X} - 101.5 + ks$)
M (case 2) To be applied when $T > 101.5$	Reference value	If 98.5 per cent ≤ $\overline{X} \leq T$, then	$M = \overline{X}$ ($AV = ks$)
		If $\overline{X}$ < 98.5 per cent, then	M = 98.5 per cent ($AV = 98.5 - \overline{X} + ks$)
		If $\overline{X} > T$, then	$M = T$ per cent ($AV = \overline{X} - T + ks$)
Acceptance value (AV)			General formula: $\left\|M - \overline{X}\right\| + ks$ Calculations are specified above for the different cases.
$L1$	Maximum allowed acceptance value		$L1$ = 15.0 unless otherwise specified
$L2$	Maximum allowed range for deviation of each dosage unit tested from the calculated value of M	On the low side, no dosage unit result can be less than 0.75 M while on the high side, no dosage unit result can be greater than 1.25 M (This is based on $L2$ value of 25.0)	$L2$ = 25.0 unless otherwise specified
T	Target content per dosage unit at time of manufacture, expressed as a percentage of the label claim. Unless otherwise stated, T is equal to 100 per cent or T is the manufacturer's approved target content per dosage unit		

percentage of label claim (see Calculation of Acceptance Value). Assume that the concentration (mass of active substance per mass of dosage unit) is uniform. Select not fewer than 30 dosage units, and proceed as follows for the dosage form designated.

Uncoated or film-coated tablets. Accurately weigh 10 tablets individually. Calculate the active substance content, expressed as percentage of label claim, of each tablet from the mass of the individual tablets and the result of the assay. Calculate the acceptance value.

Hard capsules. Accurately weigh 10 capsules individually, taking care to preserve the identity of each capsule. Remove the contents of each capsule by suitable means. Accurately weigh the emptied shells individually, and calculate for each capsule the net mass of its contents by subtracting the mass of the shell from the respective gross mass. Calculate the active substance content in each capsule from the mass of product removed from the individual capsules and the result of the assay. Calculate the acceptance value.

Soft capsules. Accurately weigh 10 intact capsules individually to obtain their gross masses, taking care to preserve the identity of each capsule. Then cut open the capsules by means of a suitable clean, dry cutting instrument such as scissors or a sharp open blade, and remove the contents by washing with a suitable solvent. Allow the occluded solvent to evaporate from the shells at room temperature over a period of about 30 min, taking precautions to avoid uptake or loss of moisture. Weigh the individual shells, and calculate the net contents. Calculate the active substance content in each capsule from the mass of product removed from the individual capsules and the result of the assay. Calculate the acceptance value.

Solid dosage forms other than tablets and capsules. Proceed as directed for hard capsules, treating each unit as described therein. Calculate the acceptance value.

Liquid or semi-solid dosage forms. Accurately weigh the amount of liquid or semi-solid that is removed from each of 10 individual containers in conditions of normal use. If necessary, compute the equivalent volume after determining the density. Calculate the active substance content in each container from the mass of product removed from the individual containers and the result of the assay. Calculate the acceptance value.

Calculation of Acceptance Value. Calculate the acceptance value (AV) as shown in content uniformity, except that the individual contents of the units are replaced with the individual estimated contents defined below.

$x_1, x_2, ..., x_n$ = individual estimated contents of the dosage units tested;

where

$$x_i = w_i \times \frac{A}{\overline{W}}$$

$w_1, w_2, ..., w_n$ = individual masses of the dosage units tested;

A = content of active substance (percentage of label claim) obtained using an appropriate analytical method (assay);

$\overline{W}$ = mean of individual masses ($w_1, w_2, ..., w_n$).

CRITERIA

Apply the following criteria, unless otherwise specified.

Solid, semi-solid and liquid dosage forms. The requirements for dosage uniformity are met if the acceptance value of the first 10 dosage units is less than or equal to $L1$ per cent. If the acceptance value is greater than $L1$ per cent, test the next 20 dosage units and calculate the acceptance value. The requirements are met if the final acceptance value of the 30 dosage units is less than or equal to $L1$ per cent and no individual content of the dosage unit is less than $(1 - L2 \times 0.01)M$ or more than $(1 + L2 \times 0.01)M$ in calculation of acceptance value under content uniformity or under mass variation. Unless otherwise specified, $L1$ is 15.0 and $L2$ is 25.0.

04/2012:20941

2.9.41. FRIABILITY OF GRANULES AND SPHEROIDS

This chapter describes 2 methods for determination of the friability of granules and spheroids, which may be used during development studies. It is recognised, however, that many methods with equal suitability may be used.

This test is intended to determine, under defined conditions, the friability of granules and spheroids. Friability is defined as a reduction in the mass of the granules or spheroids or in the formation of fragments of granules or spheroids, occurring when the granules or spheroids are subjected to mechanical strain during handling (tumbling, vibration, fluidisation, etc.). Examples of changes are abrasion, breakage or deformation of granules or spheroids.

METHOD A

Apparatus (fluidised-bed apparatus). The apparatus (see Figure 2.9.41.-1) consists of a glass cylinder (A) with a conical lower part. The cylinder is provided with a sieve lid (B) having an aperture size of 500 µm or any other suitable sieve. The conical end is connected to a U-shaped glass tube (C) that can be disconnected from the cylinder for removal of the granules or spheroids. The U-tube is attached to a T-coupling (D). One inlet of the T-coupling is joined by a silicone tube to a manometer for regulating the compressed-air flow (use compressed air complying with the test for water in the monograph *Medicinal air (1238)*), the other one is connected via a silicone tube to a by-pass flowmeter (E) (0.10-1.00 $m^3 \cdot h^{-1}$).

Procedure. *The following procedure is usually suitable.* Remove the fine particles by sieving (sieve having an aperture size of 710 µm or any other suitable sieve). Introduce about 8.0 g (m_1) of granules or spheroids into the cylinder (A). Close the apparatus with the sieve lid (B). Adjust the flow rate of the compressed air to 0.45 $m^3 \cdot h^{-1}$. After 15 min, remove the granules or spheroids from the apparatus by disconnecting the U-tube and weigh again (m_2). Test 3 samples and calculate the mean value. It is recommended to spray the inside of the apparatus with an antistatic agent every 3 determinations in order to prevent electrostatic charging.

Loss on drying. Dry in an oven at 105 °C, unless otherwise prescribed. Alternatively, other drying conditions as described in general chapter *2.2.32* may be used.

Calculation

$$F = \frac{m_1 (100 - T_1) - m_2 (100 - T_2)}{m_1} \times 100$$

F = friability;

T_1 = percentage loss on drying before the test (mean of 2 determinations);

T_2 = percentage loss on drying after the test (mean of 2 determinations);

m_1 = mass of the granules or spheroids before the test, in grams;

m_2 = mass of the granules or spheroids after the test, in grams.

METHOD B

Apparatus (oscillating apparatus). The apparatus (see Figure 2.9.41.-2) consists of a glass container, containing the granules or spheroids to be examined, which is subjected

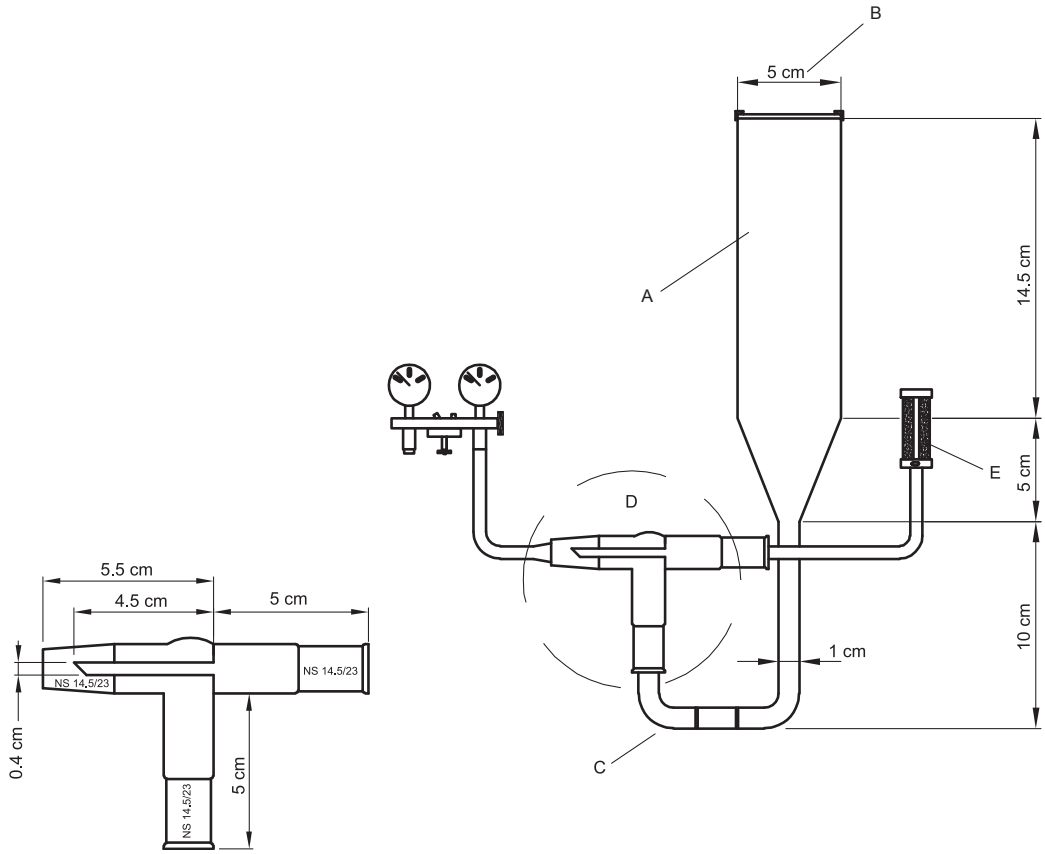

Figure 2.9.41.-1. – *Fluidised-bed apparatus*

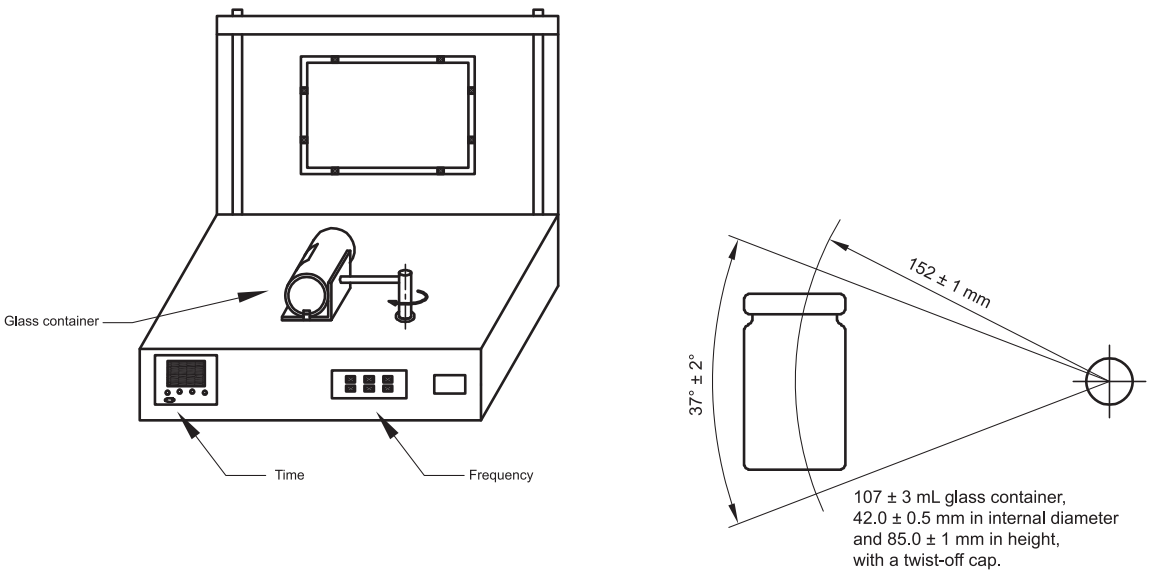

Figure 2.9.41.-2. – *Oscillating apparatus*

to horizontal oscillations. The frequency and duration of the oscillations can be varied continuously. The frequency can be adjusted, using a scale, to a value in the range 0-400 oscillations/min. The duration can be set to a value in the range 0-9999 s.

Procedure. *The following procedure is usually suitable.* Remove the fine particles by sieving (sieve having an aperture size of 355 µm or any other suitable sieve). In the glass container, weigh about 10.00 g (m_1) of the granules or spheroids. Install the container in the apparatus. Shake for 240 s at the highest frequency for hard granules or spheroids, or for 120 s at a lower frequency (e.g. 140 oscillations/min) for soft granules or spheroids. Sieve (355 µm, or the same sieve as used previously) and weigh the granules or spheroids again (m_2). Test 3 samples and calculate the mean value.

Loss on drying. Dry in an oven at 105 °C, unless otherwise prescribed. Alternatively, other drying conditions as described in general chapter *2.2.32* may be used.

Calculation

$$F = \frac{m_1 (100 - T_1) - m_2 (100 - T_2)}{m_1} \times 100$$

F = friability;

T_1 = percentage loss on drying before the test (mean of 2 determinations);

T_2 = percentage loss on drying after the test (mean of 2 determinations);

m_1 = mass of the granules or spheroids before the test, in grams;

m_2 = mass of the granules or spheroids after the test, in grams.

01/2008:20942

2.9.42. DISSOLUTION TEST FOR LIPOPHILIC SOLID DOSAGE FORMS

APPARATUS

The apparatus (see Figure 2.9.42.-1) consists of:

- A reservoir for the dissolution medium.
- A pump that forces the dissolution medium upwards through the flow-through cell.
- A flow-through cell shown in Figure 2.9.42.-2 specifically intended for lipophilic solid dosage forms such as suppositories and soft capsules. It consists of 3 transparent parts which fit into each other. The lower part (1) is made up of 2 adjacent chambers connected to an overflow device.

  The dissolution medium passes through chamber A and is subjected to an upwards flow. The flow in chamber B is downwards directed to a small-size bore exit which leads upwards to a filter assembly. The middle part (2) of the cell has a cavity designed to collect lipophilic excipients which float on the dissolution medium. A metal grill serves as a rough filter. The upper part (3) holds a filter unit for paper, glass fibre or cellulose filters.
- A water-bath that will maintain the dissolution medium at 37 ± 0.5 °C.

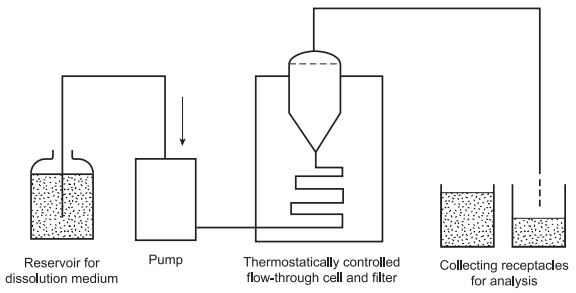

Figure 2.9.42.-1. – *Flow-through apparatus*

Dissolution medium. If the dissolution medium is buffered, adjust its pH to within ± 0.05 units of the prescribed value. Remove any dissolved gases from the dissolution medium before the test since they can cause the formation of bubbles that significantly affect the results.

METHOD

Place 1 unit of the preparation to be examined in chamber A. Close the cell with the prepared filter assembly. At the beginning of the test, chamber A requires air removal via a small orifice connected to the filter assembly. Heat the dissolution medium to an appropriate temperature taking the melting point of the preparation into consideration. Using a suitable pump, introduce the warmed dissolution medium through the bottom of the cell to obtain a suitable continuous flow through an open or closed circuit at the prescribed rate (± 5 per cent). When the dissolution medium reaches the overflow, air starts to escape through the capillary and chamber B fills with the dissolution medium. The preparation spreads through the dissolution medium according to its physico-chemical properties.

In justified and authorised cases, representative fractions of large volume suppositories may be tested.

SAMPLING AND EVALUATION

Samples are always collected at the outlet of the cell, irrespective of whether the circuit is opened or closed.

Filter the liquid removed using an inert filter of appropriate pore size that does not cause significant adsorption of the active substance from the solution and does not contain substances extractable by the dissolution medium that would interfere with the prescribed analytical method. Proceed with analysis of the filtrate as prescribed.

The quantity of the active substance dissolved in a specified time is expressed as a percentage of the content stated on the label.

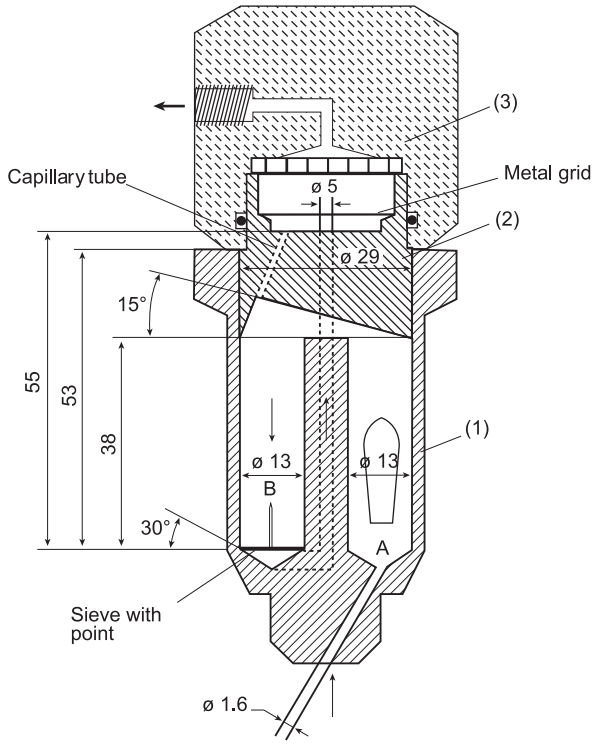

Figure 2.9.42.-2. – *Flow-through cell*
Dimensions in millimetres

01/2008:20943
corrected 6.1

2.9.43. APPARENT DISSOLUTION

This method is mainly used to determine the apparent dissolution rate of pure solid substances. It may also be used for the determination of the apparent dissolution rate of active substances in preparations presented as powders or granules.

APPARATUS

All parts of the apparatus that may come into contact with the sample or the dissolution medium are chemically inert and do not adsorb, react with, or interfere with the test sample. No part of the assembly or its environment contributes significant motion, agitation or vibration beyond that resulting from the flow-through system.

Apparatus that permits observation of the sample is preferable.

The apparatus (see Figure 2.9.43.-1) consists of:

- a reservoir for the dissolution medium;
- a pump that forces the dissolution medium upwards through the flow-through cell;

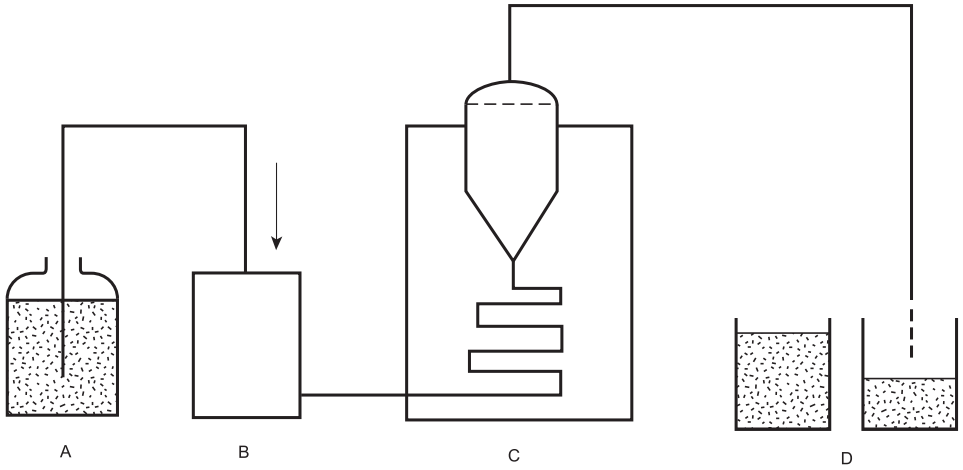

A. reservoir for dissolution medium B. pump C. thermostatically controlled flow-through cell and filter D. collecting vessels for analysis

Figure 2.9.43.-1. – *Flow-through apparatus*

- a flow-through cell, preferably of transparent material, mounted vertically with a filter system preventing escape of undissolved particles;
- a water-bath that will maintain the dissolution medium at the chosen temperature (generally 37 ± 0.5 °C).

The flow-through cell shown in Figure 2.9.43.-2 consists of 3 parts that fit into each other. The lower part supports a system of grids and filters on which the powder is placed. The middle part, which fits onto the lower part, contains an insert that sieves the sample when the dissolution medium flows through the cell. This insert is made up of 2 parts: a conical sieve that is placed on the sample and a clip placed midway down the middle part to hold the sieve in place when the dissolution medium passes through. A 2nd filtration assembly (grid and filter) is placed on top of the middle part before fitting the upper part through which the dissolution medium flows out of the cell.

DISSOLUTION MEDIUM

If the dissolution medium is buffered, adjust its pH to within ± 0.05 units. Remove any dissolved gases from the dissolution medium before the test, since they can cause the formation of bubbles, which significantly affect the results.

METHOD

Place a bead of 5 ± 0.5 mm diameter at the bottom of the cone of the lower part followed by glass beads of suitable size, preferably of 1 ± 0.1 mm diameter. Place a sieve (with 0.2 mm apertures), a suitable filter and a 2nd sieve on top of the lower part. Fit the middle part onto the lower part. Weigh the assembly. Place the sample on the filtration assembly and weigh the sample in the cell. Place the sieve of the insert, cone upwards, on the sample, and position the clip midway down the middle part. Place a sieve (with 0.2 mm apertures) and a suitable filter on top of the middle part. Fit the upper part. Heat the dissolution medium to the chosen temperature. Using a suitable pump, introduce the dissolution medium through the bottom of the cell to obtain a suitable continuous flow through an open or closed circuit at the prescribed rate ± 5 per cent.

SAMPLING

Samples of dissolution medium are collected at the outlet of the cell, irrespective of whether the circuit is opened or closed.

Immediately filter the liquid removed using an inert filter of appropriate pore size that does not cause significant adsorption of the substances from the solution and does not contain substances extractable by the dissolution medium that would interfere with the prescribed analytical method. Proceed with the analysis of the filtrate as prescribed.

ASSESSMENT OF THE RESULTS

When the test is performed for batch release purposes, an adequate number of replicates is carried out.

The results are expressed as:

- the amount of dissolved substance by time unit (if the dissolution is linear);
- the dissolution time of the whole sample and at appropriate intermediate stages.

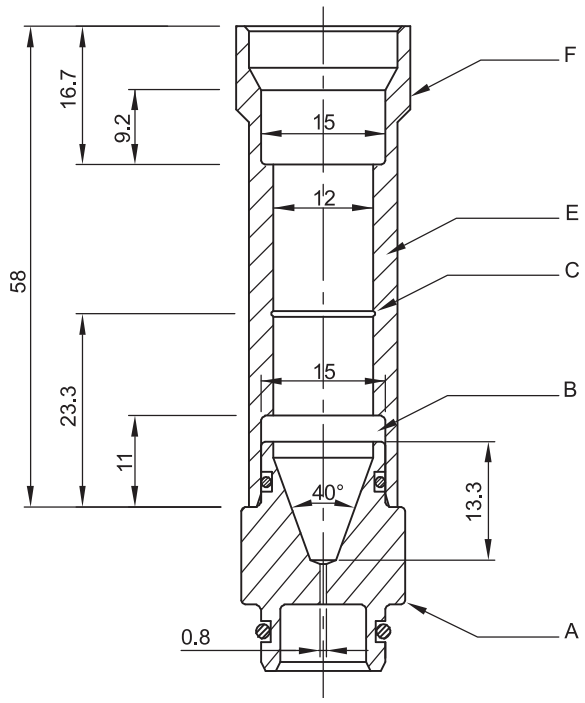

A. lower part C. clip E. middle part
B. sieve D. insert F. upper part

Figure 2.9.43.-2. – *Flow-through cell*
Dimensions in millimetres

01/2012:20944

2.9.44. PREPARATIONS FOR NEBULISATION: CHARACTERISATION

Products used for nebulisation and intended for pulmonary delivery are characterised using the following tests:

- Active substance delivery rate and total active substance delivered;
- Aerodynamic assessment of nebulised aerosols.

These tests standardise the approach given to the assessment of the dose that would be delivered to a patient but are not intended to provide assessment of the nebuliser device itself, which is described in the European standard EN 13544-1:2007+A1:2009, Respiratory therapy equipment - Part 1: Nebulizing systems and their components.

The mass- rather than the number-weighted size distribution is more appropriate to evaluate product performance. Indeed, active substance mass as a function of aerodynamic diameter is more indicative of therapeutic effect within the respiratory tract.

ACTIVE SUBSTANCE DELIVERY RATE AND TOTAL ACTIVE SUBSTANCE DELIVERED

These tests are performed to assess the rate of delivery to the patient and the total active substance delivered to the patient, using standardised conditions of volumetric flow rate. It is essential that breath-enhanced and breath-actuated nebulisers be evaluated by a breathing simulator, as the output of these types of device is highly dependent on inhalation flow rate. The methodology below describes the use of a standard breathing pattern defined for adults. Should a particular product for nebulisation only be indicated for paediatric (i.e. neonate, infant or child) use, then paediatric breathing pattern(s) must be used. Breathing patterns are used, rather than continuous flow rates, to provide a more appropriate measure of the mass of active substance that would be delivered to patients.

Active substance delivery rate and total active substance delivered are appropriate characteristics because they allow the mass delivered to be characterised in a standard way regardless of the nebuliser used. Accordingly, the test methodology described below allows that the mass of active substance delivered in the 1st period (typically 1 min) is measured (consequently giving an assessment of active substance delivery rate) as well as capturing the total mass of active substance delivered.

APPARATUS

Breathing simulator. A commercially available breathing simulator, which is able to generate the breathing profiles specified in Table 2.9.44.-1, is used for the test. The breathing profile indicated for adults is used unless the medicinal product is specifically intended for use in paediatrics, where alternate patterns should be used, as indicated in Table 2.9.44.-1.

Table 2.9.44.-1. – *Breathing simulator specifications*

Item	Specification			
	Adult	Neonate	Infant	Child
Tidal volume	500 mL	25 mL	50 mL	155 mL
Frequency	15 cycles/min	40 cycles/min	30 cycles/min	25 cycles/min
Waveform	sinusoidal	sinusoidal	sinusoidal	sinusoidal
Inhalation/exhalation ratio	1:1	1:3	1:3	1:2

Filter system. A suitably validated low-resistance filter, capable of quantitatively collecting the aerosol and enabling recovery of the active substance with an appropriate solvent, is used for the test. The dead volume of the filter casing does not exceed 10 per cent of the tidal volume used in the breath simulation.

METHOD

Attach the filter (contained in the filter holder) (A) to the breath simulator (B) according to Figure 2.9.44.-1. Fill the nebuliser (C) with the volume of the medicinal product as specified in the patient instructions. Attach the mouthpiece of the nebuliser to the inhalation filter using a mouthpiece adapter if required, ensuring that connections are airtight. Make sure the nebuliser is positioned in the same orientation as intended for use; this may require tilting the breathing simulator and filter holder. Set the breathing simulator to generate the specified breathing pattern.

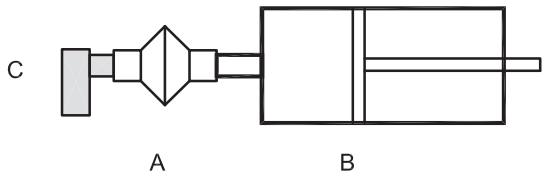

A. inhalation filter and filter holder B. breathing simulator C. nebuliser

Figure 2.9.44.-1. – *Experimental set-up for breathing simulator testing*

Start the breathing simulator then, at the beginning of an inhalation cycle, start the nebuliser. Operate the nebuliser for a defined initial time period. The time chosen, usually 60 ± 1 s, must allow sufficient active substance deposition on the inhalation filter to allow quantitative analysis. If the quantity of active substance deposited on the inhalation filter in 60 s is insufficient for this analysis, the length of the time interval for aerosol collection can be increased. If the filter is soaked with the preparation, this time can be decreased. At the end of this initial period, stop the nebuliser.

Place a fresh filter and filter holder in position and continue until nebulisation ceases. Interrupt nebulisation and exchange filters if necessary, to avoid filter saturation.

RESULTS

Using a suitable method of analysis, determine the mass of active substance collected on the filters and filter holders during each time interval. Determine the active substance delivery rate by dividing the mass of active substance collected on the first inhalation filter by the time interval used for collection. Determine the total mass of active substance delivered by summing the mass of active substance collected on all inhalation filters and filter holders.

AERODYNAMIC ASSESSMENT OF NEBULISED AEROSOLS

Nebulised products need to be size-characterised at flow rates lower than the range that is normally used for powder inhalers and metered-dose inhalers. A flow rate of 15 L/min is recommended in the European standard because this value represents a good approximation to the mid-inhalation flow rate achievable by a tidally breathing healthy adult (500 mL tidal volume).

Although low-angle laser light scattering instruments (laser diffractometers) can provide rapid size-distribution measurements of nebuliser-generated aerosols, these techniques do not detect the active substance; rather they measure the size distribution of the droplets irrespective of their content. This may not be a problem with homogeneous solutions, but can result in significant error if the product to be nebulised is a suspension, or if droplet evaporation is significant as can be the case with certain nebuliser types. Cascade impactors enable the aerosol to be characterised

unambiguously in terms of the mass of active substance as a function of aerodynamic diameter. Laser diffraction may be used if validated against a cascade impaction method.

Apparatus E (see below under Apparatus), a cascade impactor, has been calibrated at 15 L/min specifically to meet the recommendation of the European standard, and is therefore used for this test. Determining mass balance in the same way as for powder inhalers and metered-dose inhalers is not straightforward, in that the dose is being captured as a continuous output, and hence is not included. As part of method development, recovery experiments must be performed to validate the method.

It is also recognised that the control of evaporation of droplets produced by nebulisers may be critical to avoid bias in the droplet size assessment process. Evaporation can be minimised by cooling the impactor to a temperature of about 5 °C, typically achieved by cooling the impactor in a refrigerator for about 90 min. Typically, at least after each day of use, the apparatus must be fully cleaned, including the inter-stage passageways, in view of the greater risk of corrosion caused by the condensation/accumulation of saline-containing droplets on inter-stage metalwork associated with cooling the impactor. It is recommended to dry all surfaces of the apparatus after each test, for example with compressed air. Note: the micro-orifice collector (MOC) should not be dried with compressed air.

APPARATUS

A detailed description of Apparatus E and the induction port is contained in general chapter *2.9.18*, and includes details of critical dimensions and the qualification process for the impactor (stage mensuration).

A back-up filter in addition to the micro-orifice collector (MOC) must be used to ensure quantitative recovery of active substance from the nebulised aerosol at the specified flow rate of 15 L/min. The filter is located below the MOC (internal filter option) or a filter in holder, external to the impactor, is used to capture any fine droplets that pass beyond the last size fractionating stage.

A pre-separator is not used for testing nebuliser-generated aerosols.

METHOD VALIDATION

Impactor stage overloading. During method development and validation, it is important to confirm that the volume of liquid sampled from the nebuliser does not overload the impactor. Visual inspection of the collection surfaces on stages collecting most of the droplets may reveal streaking if overloading has occurred. This phenomenon is usually also associated with an increase in mass of active substance collected on the final stage and back-up filter. Reducing the sampling period (T_0) is the most effective way to avoid overloading in any given system, balancing overloading with analytical sensitivity.

Re-entrainment. Droplet bounce and re-entrainment are less likely with nebuliser-produced droplets than with solid particles from inhalers and for that reason coating would not normally be required.

METHOD

Pre-cool the assembled impactor and induction port in a refrigerator (set at about 5 °C) for not less than 90 min and start the determination within about 5 min of removal of the impactor from the refrigerator. Other methods that maintain the impactor at a constant temperature (for example, use of a cooling cabinet) can also be employed when validated.

Set up the nebuliser with a supply of driving gas (usually air or oxygen), or use a compressor, at the pressure and flow rate specified by the manufacturer of the nebuliser. Take precautions to ensure that the gas supply line does not become detached from the nebuliser when under pressure. Fill the nebuliser with the volume of the medicinal product as specified in the patient instructions.

Remove the impactor from the refrigerator. Attach the induction port to the impactor, and connect the outlet of the impactor/external filter to a vacuum source that is capable of drawing air through the system at 15 L/min as specified in Figure 2.9.44.-2. Turn on the flow through the impactor.

Connect a flow meter, calibrated for the volumetric flow leaving the meter, to the induction port. Adjust the flow control valve located between the impactor and the vacuum source to achieve a steady flow through the system at 15 L/min (± 5 per cent). Remove the flow meter.

Make sure the nebuliser is positioned in the same orientation as intended for use then attach the mouthpiece of the nebuliser to the induction port, using a mouthpiece adapter if required, ensuring that connections are airtight. Switch on the flow/compressor for the nebuliser. Sample for a predetermined time (T_0). Once determined, this time (T_0) must be defined and used in the analytical method for a particular medicinal product to ensure that mass fraction data can be compared. At the end of the sampling period, switch off the driving gas flow/compressor to the nebuliser, remove the nebuliser from the induction port and switch off the flow from the vacuum source to the impactor.

Dismantle the impactor and, using a suitable method of analysis, determine the mass of active substance collected in the induction port, on each stage and on the back-up filter/external filter as described for Apparatus E in general chapter *2.9.18*. Add the mass of active substance collected in the MOC to that deposited on the back-up filter/external filter and treat as a single sample for the purpose of subsequent calculations.

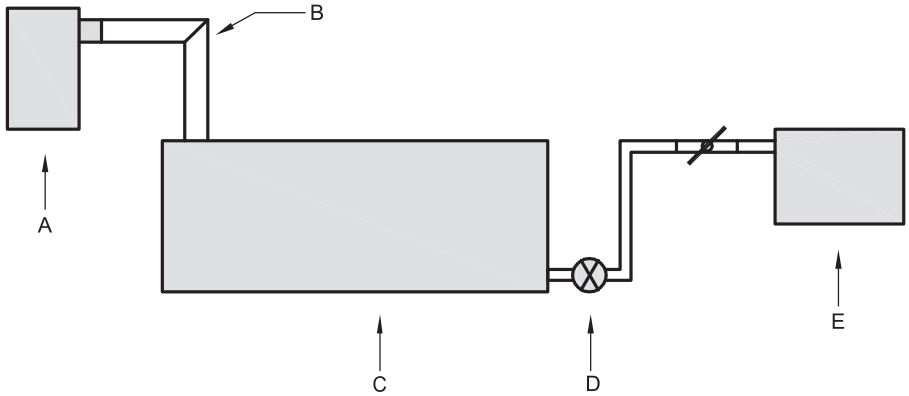

A. nebuliser B. induction port C. impactor (apparatus E) D. flow control valve E. vacuum source

Figure 2.9.44.-2. – *Apparatus E for measuring the size distribution of preparations for nebulisation*

Calculate the mass fraction ($F_{m,comp}$) of the active substance deposited on each component of the impactor, commencing with the induction port and proceeding in order through the impactor, using the following expression:

$$F_{\mathrm{m,comp}} = \frac{m_{\mathrm{comp}}}{M}$$

m_{comp} = mass associated with the component under evaluation;
M = total mass collected by the system.

Present $F_{m,comp}$ in order of location within the measurement equipment, beginning at the induction port and ending with the back-up filter of the impactor (see Figure 2.9.44.-3). Where appropriate, $F_{m,comp}$ for adjacent stages of the impactor may be combined in order to report the mass fraction collected on a group of stages as a single value.

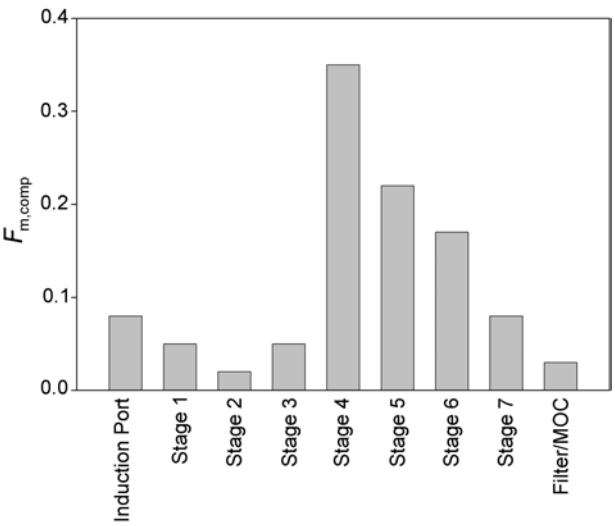

Figure 2.9.44.-3. – *Example of mass fraction of droplets presented in terms of location within the sampling system*

Determine the cumulative mass-weighted particle-size distribution of the aerosol size-fractionated by the impactor in accordance with the procedure given in general chapter *2.9.18*. Starting at the filter, derive a cumulative mass versus effective cut-off diameter of the respective stages (see Table 2.9.44.-2 for the appropriate cut-off diameters at 15 L/min). Plot the cumulative fraction of active substance versus cut-off diameter in a suitable format, for example logarithmic or log-probability format. Where appropriate, determine by interpolation the fraction either below a given size or between an upper and a lower size limit.

Table 2.9.44.-2. – *Cut-off sizes for Apparatus E at 15 L/min*

Stage	Cut-off diameter (µm)
1	14.1
2	8.61
3	5.39
4	3.30
5	2.08
6	1.36
7	0.98

If necessary, and where appropriate, determine values for the mass median aerodynamic diameter (MMAD) and the geometric standard deviation (GSD), as appropriate.

07/2009:20945

2.9.45. WETTABILITY OF POROUS SOLIDS INCLUDING POWDERS

INTRODUCTION

The wettability of solid surfaces is commonly characterised by direct or indirect contact angle measurements. The contact angle (θ) between a liquid and a solid is the angle naturally formed when a drop of a liquid is placed on a solid surface. This is depicted in Figure 2.9.45.-1. For a given liquid, wettable solids show a low contact angle and non-wettable solids show a contact angle of 90° or more.

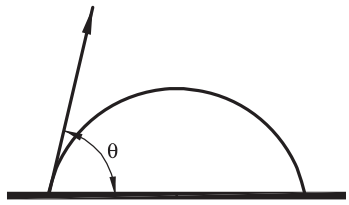

Figure 2.9.45.-1. – *Contact angle (θ) of a sessile drop observed on a non-porous surface*

2 methods for the determination of wettability are described below. The methods are capable of measuring the wettability of porous solids like powders or granules. Both methods express the wettability by a contact angle measurement between the porous solid and a given liquid.

The sessile drop method is based on direct measurement of a contact angle of a sessile drop on a compacted powder disc.

With the Washburn method the contact angle is indirectly measured. The method is based on the capillary effect of the powder pores. The effect (mass gain) is recorded by special electronic balances starting the moment when the powder sample touches the surface of a liquid, preferably not dissolving or poorly dissolving the sample. The measurement has very little or no effect on the state of the powder.

Any pre-treatment of the sample to be examined is disadvantageous, since the properties may be significantly altered. For example, the compaction of a powder as a disc may decrease the surface free energy when the crystalline state of the powder is changed (e.g. metastable forms), or may increase surface free energy by creating crystal defects (disadvantage of the sessile drop method since compacted powder discs are tested).

The methods are usually applied to examine the following parameters:

- batch-to-batch consistency of samples in terms of wettability;
- effect of liquid viscosity on wettability;
- effect of surface tension of a liquid on wettability;
- alteration of surface properties of samples.

SESSILE DROP METHOD

This method may be used to characterise directly the wettability of coatings and compacted formulations such as tablets. Moreover, it is sometimes possible to use the sessile drop instrument in a dynamic measurement (dynamic contact angle measurement, Figure 2.9.45.-2) of porous solid/liquid systems where the contact angle decreases. By taking several contact angle measurements as a function of time, the rate of spreading accompanied by penetration of a liquid droplet into a slightly porous solid may be studied.

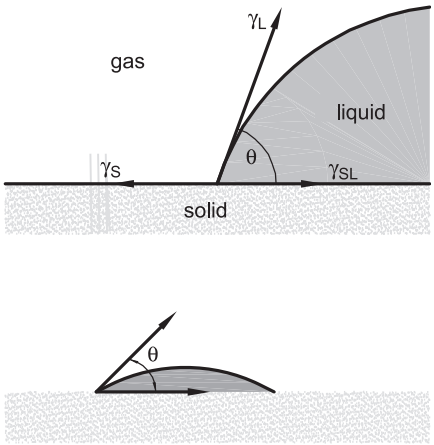

Figure 2.9.45.-2. – *Sessile drop determination with visual inspection of the droplet*

Under equilibrium conditions the contact angle of a sessile drop depends on 3 interrelated surface tensions and is determined using Young's equation (see Figure 2.9.45.-2, 1st part):

$$\gamma_S = \gamma_{SL} + \gamma_L \cos\theta$$

γ_S = surface tension of the solid with air;

γ_{SL} = interfacial tension of the solid with the liquid;

γ_L = surface tension of the liquid with air.

PROCEDURE

Since powders are unable to form a completely flat surface, the powder is usually compacted as a disc in an attempt to make the surface smoother. A liquid drop with a given volume is placed on the disc (see Figure 2.9.45.-2) allowing direct measurement of the contact angle using a goniometer fitted with an eyepiece protractor, or by geometric construction on a photomicrograph. Other physical and mathematical procedures of data analysis may also be appropriate. The drop volume may influence the result. Several determinations of the contact angle (θ) (n = 6) are usually carried out and the average is calculated.

WASHBURN METHOD

The Washburn method is able to measure the contact angle of porous solids with a contact angle in the range of 0-90°.

The tested material is the combination of the sample, the holder and the filter system. Therefore, an estimation or determination of the true value is not possible and only apparent values of the contact angle can be determined. However, the contact angle of the sample is the functional property on which the result is significantly dependent. The outcome of the test is a ranking order listing the wettability of different substances or formulations characterised by an apparent contact angle.

PRINCIPLE

If a porous solid is brought into contact with a liquid, such that the solid is not submerged in the liquid, but rather is just touching the liquid surface, then the rise of liquid into the pores of the solid due to capillary action will be governed by the following equations:

$$m^2 = \frac{t}{A} \qquad (1)$$

m = mass of liquid sucked into the solid;

t = time elapsed since the solid and the liquid were brought into contact;

A = constant, dependent on the properties of the liquid and the solid to be examined, calculated using the following equation:

$$A = \frac{\eta}{c \times \rho^2 \times \gamma \times \cos\theta} \qquad (2)$$

η = viscosity of the liquid;

ρ = density of the liquid;

γ = surface tension of the liquid;

θ = contact angle between the solid and the liquid;

c = material constant, dependent on the porous texture of the solid.

Equations (1) and (2) lead to equation (3):

$$\cos\theta = \frac{m^2}{t} \times \frac{\eta}{c \times \rho^2 \times \gamma} \qquad (3)$$

In setting up a Washburn determination, a liquid with known density (ρ), viscosity (η), and surface tension (γ) is used. Under these conditions, when the mass of liquid rising into the porous solid is monitored as a function of time (such that capillary penetration rate ($\frac{m^2}{t}$) is the experimental data), 2 unknowns remain according to equation (3): the contact angle (θ) of the liquid on the solid, and the solid material constant (c).

Determination of the material constant (*c*). The material constant for a porous solid is determined by the following equation, considering cylindrical pores:

$$\frac{\pi^2 \times r^5 \times N^2}{2} \qquad (4)$$

r = average capillary radius within the porous solid;

N = number of capillaries per volumetric unit.

If a Washburn determination is performed with a liquid considered to have a contact angle of 0° (cos 0° = 1) on the solid, then the solid material constant (c) is the only remaining unknown in equation (3) and can thus be determined. *n*-Heptane is the liquid of choice for determining material constants because of its low surface tension (20.14 mN·m^{-1} at 25 °C). *n*-Hexane may also be used (18.43 mN·m^{-1} at 25 °C) but is more volatile. If the powder dissolves too quickly in these liquids, hexamethyldisiloxane may be used instead (15.9 mN·m^{-1} at 25 °C). Replicate determinations are performed (n = 6) and the average value calculated.

Once the material constant (c) has been determined for the solid to be examined, a sample of the solid can be tested for wettability by another liquid. The material constant determined by the *n*-heptane test is used in the Washburn equation, in combination with the capillary penetration rate ($\frac{m^2}{t}$) data obtained while testing the substance to be examined in the prescribed liquid. This allows calculation of the contact angle.

NOTE: if a series of liquids (at least 2 liquids in addition to the liquid used to determine the material constant) is tested against a given solid then the resultant contact angle data can be used to calculate the surface energy of the porous solid.

APPARATUS

Figure 2.9.45.-3 shows the principal components of the apparatus. The main device is an electronic balance with a suitable processor ensuring a suitable resolution in force measurement and a suitable resolution in lifting up the immersion liquid towards the sample.

Table 2.9.45.-1 indicates parameters of the electronic balance that are generally considered suitable.

Table 2.9.45.-1. – *Technical parameters of the electronic balance*

	Lift	Mass measurement
Range	> 110 mm	0 - 210 g
Resolution	0.1 µm	10 µg
Speed	0.099 - 500 mm/min	-

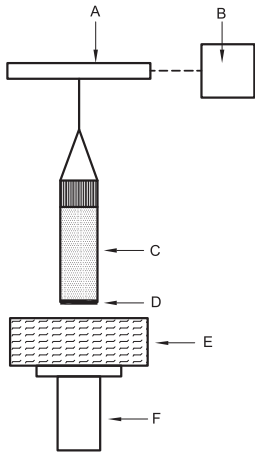

A. electronic balance C. sample holder E. immersion liquid

B. computer D. filter F. lift

Figure 2.9.45.-3. – *Apparatus for contact angle measurement by the Washburn method*

Sample holders. The sample holder may be a small glass cylinder with a sintered-glass filter at one end.

Powder material holders (see Figure 2.9.45-4) may also be made of aluminium; they are less fragile than those made of glass and have small holes in the bottom that render them easier to clean than a sintered-glass filter. The cover for the cell is equipped with 2 screw threads. One connects it with the sample chamber while the other allows the user to guide a piston down onto the sample itself and compact it. The apparatus is similar to an automatic tensiometer, except for the sample holder.

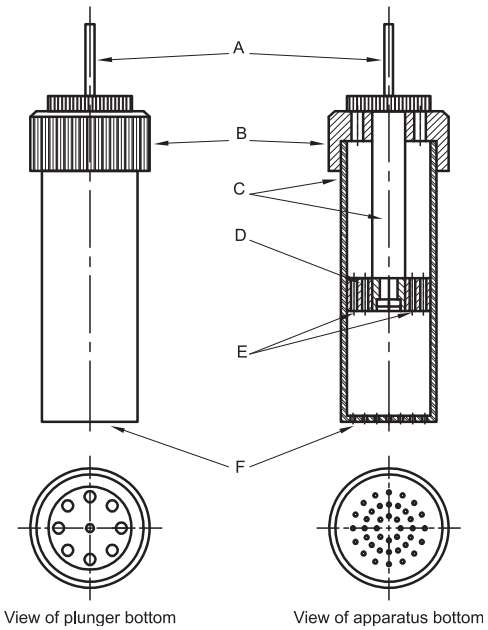

A. fixing C. thread E. capillary holes

B. cover D. plunger F. capillary holes

Figure 2.9.45.-4. – *Example of sample holder with plunger for compaction of a powder*

PROCEDURE

Filling of the sample holder. Place a disc of filter paper in the bottom of the aluminium or glass sample holder. This prevents powder from leaking out of the bottom of the cell. The filter does not have to be made of paper, but it must be a material that is easily wetted by the liquid to be tested. A black-band filter (used for reverse osmosis) is recommended because of its high porosity and minimum flow resistance.

Place a known amount of powder into the cell. The reproducibility of material constants and contact angles will depend on the ability to weigh out the same amount of powder for each test when a sufficient and adjusted amount of powder is compacted in a uniform way (i.e. tapping/compaction of the powder).

For most powders, a correct amount is in the range of a few grams, typically filling about 2/3 of the capacity of the holder. Place a second piece of filter paper on top of the powder in the cell. This will prevent powder from rising through the holes in the piston during the compaction process and/or during the determination.

Tapping/compaction of the powder. A bulk powder bed is very porous and thus very sensitive to small influences that can easily alter the porosity and consequently the *c*-constant. Therefore a tapped powder may be advantageous and will show more reproducible results. The appropriate number of taps must first be evaluated: 50-100 taps are usually appropriate.

If the aluminium sample holder is used then it may be mounted in the cylinder of a stamp volumeter, which can run the evaluated number of taps.

If tapping is not appropriate, the powder bed is compacted by screwing the piston of the aluminium sample holder applying a specified pressure.

A further possibility is centrifugation under defined conditions. Where applicable, a compacted disc of the powder sample may also be mounted on the electronic balance. A sample holder is omitted in this case.

After connecting to the balance, the sample holder is positioned with the porous solid just above the surface of the liquid (see Figure 2.9.45.-3), using the lift.

The liquid is raised further until it just touches the bottom of the porous sample. Mass-versus-time data is then collected as liquid penetrates into the solid. Data can be presented in either graphical or tabular format. The apparatus may perform the whole determination automatically.

CRITICAL PARAMETERS

The following points must be considered.

Sample properties:

- water content of the sample;
- crystalline or solid-state properties of the sample (polymorphic form, type of solvate).

Sample preparation:

- homogeneity of any powder blend to be examined;
- particle-size distribution; before testing it is sometimes advisable to sieve the sample (e.g. using a 250 µm sieve);
- the optimal compaction parameters (amount of sample, number of taps or piston mass) must be determined;
- the compaction state of the different powder samples must be uniform;
- the sample holder or, if used, the glass frit must be carefully cleaned;
- uniformity of the results is improved by using a sample holder made of aluminium.

Immersion liquid:

- specifications of the immersion liquid must be indicated.

04/2013:20947

2.9.47. DEMONSTRATION OF UNIFORMITY OF DOSAGE UNITS USING LARGE SAMPLE SIZES

The procedure is intended for, but not limited to, the evaluation of medicinal products that are manufactured using process analytical technology (PAT) methodology.

Compliance with general chapter *2.9.40. Uniformity of dosage units* can be demonstrated by the following procedure, when large samples (sample size $n \geq 100$) are evaluated.

Application of this chapter does not constitute a mandatory requirement. It presents 2 alternative tests (Alternative I and Alternative II). Fulfilling the requirements of either of the 2 alternatives is considered as evidence that the medicinal product tested complies with general chapter *2.9.40.* The 2 alternatives are considered equivalent in their demonstration of compliance with general chapter *2.9.40.*

ALTERNATIVE 1 (PARAMETRIC)

Select not fewer than 100 units according to a predefined sampling plan.

The consistency of dosage units is evaluated by content uniformity or mass variation as prescribed in Table 2.9.40.-1. Calculate the acceptance value (AV) using the following expression:

$$\left|M - \overline{X}\right| + ks$$

for which the terms are defined in Table 2.9.40.-2, but using the sample size-dependent value for k defined in Table 2.9.47.-1.

CRITERIA

Apply the following criteria, unless otherwise specified.

The requirements for dosage form uniformity are met if:

1. the acceptance value (AV) is less than or equal to $L1$; and
2. in the calculation of acceptance value (AV) under content uniformity or under mass variation, the number of individual dosage units outside $(1 \pm L2 \times 0.01)M$ is less than or equal to $c2$ as defined for a given sample size n in Table 2.9.47.-1.

Unless otherwise specified, $L1$ is 15.0 and $L2$ is 25.0.

Table 2.9.47.-1. is to be interpreted as follows:

- for a sample size of $n = 400$, enter the table at $n \geq 385$: $k = 2.23$ and $c2 = 3$;
- for a sample size of $n = 450$, enter the table at $n \geq 407$: $k = 2.24$ and $c2 = 3$;
- for a sample size of $n = 500$, enter the table at $n \geq 490$: $k = 2.24$ and $c2 = 4$.

ALTERNATIVE 2 (NON-PARAMETRIC)

Select not fewer than 100 units according to a predefined sampling plan.

The consistency of dosage units is evaluated by content uniformity or mass variation as prescribed in Table 2.9.40.-1. Assay individually or weigh the units and calculate individual contents as prescribed in general chapter *2.9.40.* Count the number of individual dosage units with a content outside $(1 \pm L1 \times 0.01)M$ and the number of individual dosage units with a content outside $(1 \pm L2 \times 0.01)M$. Evaluate if the values are within the limits defined in Table 2.9.47.-2.

CRITERIA

Apply the following criteria, unless otherwise specified.

The requirements for dosage form uniformity are met if:

1. the number of individual dosage units outside $(1 \pm L1 \times 0.01)M$ is less than or equal to $c1$; and
2. the number of individual dosage units outside $(1 \pm L2 \times 0.01)M$ is less than or equal to $c2$.

$c1$ and $c2$ for a given sample size n are defined in Table 2.9.47.-2. Unless otherwise specified, $L1$ is 15.0 and $L2$ is 25.0.

Table 2.9.47.-2 is to be interpreted as follows:

- for a sample size of $n = 400$, enter the table at $n \geq 394$: $c1 = 11$ and $c2 = 3$;
- for a sample size of $n = 450$, enter the table at $n \geq 434$: $c1 = 12$ and $c2 = 3$;
- for a sample size of $n = 500$, enter the table at $n \geq 490$: $c1 = 13$ and $c2 = 4$.

Table 2.9.47.-1. – *Acceptability constant (k) and acceptable number of dosage units with a content outside (1 ± L2 × 0.01)M (= c2) for a given sample size n*

n (≥)	*k*	*c2*
100	2.15	0
105	2.16	
120	2.17	
139	2.18	
161	2.19	
176	2.19	1
189	2.20	
224	2.21	
270	2.22	
280	2.22	2
328	2.23	
385	2.23	3
407	2.24	
490	2.24	4
516	2.25	
594	2.25	5
672	2.26	
699	2.26	6
804	2.26	7
905	2.27	
908	2.27	8
1013	2.27	9
1118	2.27	10
1223	2.27	11
1276	2.28	
1328	2.28	12
1432	2.28	13
1537	2.28	14
1642	2.28	15
1747	2.28	16
1851	2.28	17
1918	2.29	
1956	2.29	18
2061	2.29	19
2166	2.29	20
2270	2.29	21
2375	2.29	22
2480	2.29	23
2585	2.29	24
2690	2.29	25
2794	2.29	26
2899	2.29	27
3004	2.29	28
3109	2.29	29
3171	2.30	
3213	2.30	30
3318	2.30	31
3423	2.30	32
3528	2.30	33
3633	2.30	34
3737	2.30	35
3842	2.30	36
3947	2.30	37
4052	2.30	38
4156	2.30	39
4261	2.30	40
4366	2.30	41
4471	2.30	42
4576	2.30	43
4680	2.30	44
4785	2.30	45
4890	2.30	46
4995	2.30	47
5099	2.30	48
5204	2.30	49
5309	2.30	50
5414	2.30	51
5519	2.30	52
5623	2.30	53
5728	2.30	54
5833	2.30	55
5938	2.30	56
6042	2.30	57
6136	2.31	
6147	2.31	58
6252	2.31	59
6357	2.31	60
6462	2.31	61
6566	2.31	62
6671	2.31	63
6776	2.31	64
6881	2.31	65
6985	2.31	66
7090	2.31	67
7195	2.31	68
7300	2.31	69
7404	2.31	70
7509	2.31	71
7614	2.31	72
7719	2.31	73
7824	2.31	74
7928	2.31	75
8033	2.31	76
8138	2.31	77
8243	2.31	78
8347	2.31	79
8452	2.31	80
8557	2.31	81
8662	2.31	82
8767	2.31	83
8871	2.31	84
8976	2.31	85
9081	2.31	86
9186	2.31	87
9290	2.31	88
9395	2.31	89
9500	2.31	90
9605	2.31	91
9710	2.31	92
9814	2.31	93
9919	2.31	94

Table 2.9.47.-2. – *Acceptable number of individual dosage units with a content outside (1 ± L1 × 0.01)M (= c1) and (1 ± L2 × 0.01)M (= c2) respectively, for a given sample size n*

n (≥)	c1	c2
100	3	0
123	4	
159	5	
176	5	1
196	6	
234	7	
273	8	
280	8	2
313	9	
353	10	
385	10	3
394	11	
434	12	
476	13	
490	13	4
517	14	
559	15	
594	15	5
601	16	
644	17	
686	18	
699	18	6
729	19	
772	20	
804	20	7
815	21	
858	22	
902	23	
908	23	8
945	24	
989	25	
1013	25	9
1033	26	
1077	27	
1118	27	10
1121	28	
1165	29	
1209	30	
1223	30	11
1253	31	
1298	32	
1328	32	12
1342	33	
1387	34	
1432	35	13
1476	36	
1521	37	
1537	37	14
1566	38	
1611	39	
1642	39	15
1656	40	
1701	41	
1746	42	
1747	42	16
1791	43	
1836	44	
1851	44	17
1882	45	
1927	46	
1956	46	18
1972	47	
2018	48	
2061	48	19
2063	49	
2109	50	
2154	51	
2166	51	20
2200	52	
2246	53	
2270	53	21
2291	54	
2337	55	
2375	55	22
2383	56	
2429	57	
2475	58	
2480	58	23
2520	59	
2566	60	
2585	60	24
2612	61	
2658	62	
2690	62	25
2704	63	
2750	64	
2794	64	26
2796	65	
2843	66	
2889	67	
2899	67	27
2935	68	
2981	69	
3004	69	28
3027	70	
3073	71	
3109	71	29
3120	72	
3166	73	
3212	74	
3213	74	30
3259	75	
3305	76	
3318	76	31
3351	77	
3398	78	
3423	78	32
3444	79	
3491	80	
3528	80	33
3537	81	
3584	82	
3630	83	
3633	83	34
3677	84	
3723	85	
3737	85	35
3770	86	
3817	87	
3842	87	36
3863	88	
3910	89	
3947	89	37
3956	90	
4003	91	
4050	92	
4052	92	38
4097	93	
4143	94	
4156	94	39
4190	95	
4237	96	
4261	96	40
4284	97	
4330	98	
4366	98	41
4377	99	
4424	100	
4471	101	42
4518	102	
4565	103	
4576	103	43
4612	104	
4658	105	
4680	105	44
4705	106	
4752	107	
4785	107	45
4799	108	
4846	109	
4890	109	46
4893	110	
4940	111	
4987	112	
4995	112	47
5034	113	
5081	114	
5099	114	48
5128	115	
5175	116	
5204	116	49
5222	117	
5269	118	
5309	118	50
5317	119	
5364	120	
5411	121	
5414	121	51
5458	122	
5505	123	
5519	123	52
5552	124	
5599	125	
5623	125	53
5647	126	
5694	127	
5728	127	54
5741	128	
5788	129	
5833	129	55
5835	130	
5883	131	
5930	132	
5938	132	56
5977	133	
6024	134	
6042	134	57
6072	135	
6119	136	
6147	136	58
6166	137	
6214	138	
6252	138	59
6261	139	
6308	140	
6355	141	
6357	141	60
6403	142	
6450	143	
6462	143	61
6498	144	
6545	145	
6566	145	62
6592	146	
6640	147	
6671	147	63
6687	148	
6734	149	
6776	149	64
6782	150	
6829	151	
6877	152	
6881	152	65
6924	153	
6972	154	
6985	154	66
7019	155	
7067	156	
7090	156	67
7114	157	
7161	158	
7195	158	68
7209	159	
7256	160	
7300	160	69
7304	161	
7351	162	
7399	163	
7404	163	70
7447	164	
7494	165	
7509	165	71
7542	166	
7589	167	
7614	167	72
7637	168	
7684	169	
7719	169	73
7732	170	
7779	171	
7824	171	74
7827	172	
7875	173	
7922	174	
7928	174	75
7970	175	
8017	176	
8033	176	76
8065	177	
8113	178	
8138	178	77
8160	179	
8208	180	
8243	180	78
8256	181	
8303	182	
8347	182	79
8351	183	
8399	184	
8446	185	
8452	185	80
8494	186	
8542	187	
8557	187	81
8589	188	
8637	189	
8662	189	82
8685	190	
8732	191	
8767	191	83
8780	192	
8828	193	
8871	193	84
8875	194	
8923	195	
8971	196	
8976	196	85
9019	197	
9066	198	
9081	198	86
9114	199	
9162	200	
9186	200	87
9210	201	
9257	202	
9290	202	88
9305	203	
9353	204	
9395	204	89
9401	205	
9449	206	
9496	207	
9500	207	90
9544	208	
9592	209	
9605	209	91
9640	210	
9688	211	
9710	211	92
9735	212	
9783	213	
9814	213	93
9831	214	
9879	215	
9919	215	94
9927	216	
9975	217	
10023	218	
10070	219	

01/2013:30100

3.1. MATERIALS USED FOR THE MANUFACTURE OF CONTAINERS

The materials described in this chapter are used for the manufacture of containers for pharmaceutical use. Their use may also be considered for the manufacture of part or all of objects used for medico-surgical purposes.

Materials and polymers other than those described in the Pharmacopoeia may be used subject to approval in each case by the competent authority responsible for the licensing for sale of the preparation in the container.

Transmissible spongiform encephalopathies (*5.2.8*). A risk assessment of the product with respect to transmissible spongiform encephalopathies is carried out, and suitable measures are taken to minimise any such risk.

01/2008:30101

3.1.1. MATERIALS FOR CONTAINERS FOR HUMAN BLOOD AND BLOOD COMPONENTS

NOTE: for materials based on plasticised poly(vinyl chloride) for containers for aqueous solutions for intravenous infusion, see text 3.1.14.

Plastic containers for the collection, storage, processing and administration of blood and its components may be manufactured from one or more polymers, if necessary with certain additives.

If all or part of the container consists of a material described in a text of the Pharmacopoeia, the quality of the material is controlled by the methods indicated in that text. (See *3.1.1.1. Materials based on plasticised poly(vinyl chloride) for containers for human blood and blood components*).

In normal conditions of use the materials and containers made from such materials do not release monomers, or other substances, in amounts likely to be harmful nor do they lead to any abnormal modifications of the blood or blood components.

01/2008:90001
corrected 7.5

3.1.1.1. MATERIALS BASED ON PLASTICISED POLY(VINYL CHLORIDE) FOR CONTAINERS FOR HUMAN BLOOD AND BLOOD COMPONENTS

DEFINITION

Materials based on plasticised poly(vinyl chloride) contain not less than 55 per cent of poly(vinyl chloride) and contain various additives, in addition to the high-molecular-mass polymer obtained by polymerisation of vinyl chloride.

Materials based on plasticised poly(vinyl chloride) for containers for human blood and blood components are defined by the nature and the proportions of the substances used in their manufacture.

PRODUCTION

Materials based on plasticised poly(vinyl chloride) are produced by polymerisation methods that guarantee a residual vinyl chloride content of less than 1 ppm. The manufacturing process is validated to demonstrate that the product complies with the following test.

Vinyl chloride. Head-space gas chromatography (*2.2.28*).

Internal standard solution. Using a microsyringe, inject 10 µL of *ether R* into 20.0 mL of *dimethylacetamide R*, immersing the tip of the needle in the solvent. Immediately before use, dilute the solution to 1000 times its volume with *dimethylacetamide R*.

Test solution. Place 1.000 g of the material to be examined in a 50 mL vial and add 10.0 mL of the internal standard solution. Close the vial and secure the stopper. Shake, avoiding contact between the stopper and the liquid. Place the vial in a water-bath at 60 ± 1 °C for 2 h.

Vinyl chloride primary solution. Prepare in a fume cupboard. Place 50.0 mL of *dimethylacetamide R* in a 50 mL vial, stopper the vial, secure the stopper and weigh to the nearest 0.1 mg. Fill a 50 mL polyethylene or polypropylene syringe with gaseous *vinyl chloride R*, allow the gas to remain in contact with the syringe for about 3 min, empty the syringe and fill again with 50 mL of gaseous *vinyl chloride R*. Fit a hypodermic needle to the syringe and reduce the volume of gas in the syringe from 50 mL to 25 mL. Inject the remaining 25 mL of vinyl chloride slowly into the vial shaking gently and avoiding contact between the liquid and the needle. Weigh the vial again; the increase in mass is about 60 mg (1 µL of the solution thus obtained contains about 1.2 µg of vinyl chloride). Allow to stand for 2 hours. Keep the primary solution in a refrigerator.

Vinyl chloride standard solution: vinyl chloride primary solution, *dimethylacetamide R* (1:3 *V/V*).

Reference solutions. Place 10.0 mL of the internal standard solution in each of six 50 mL vials. Close the vials and secure the stoppers. Inject 1 µL, 2 µL, 3 µL, 5 µL and 10 µL, respectively, of the vinyl chloride standard solution into five of the vials. The six solutions thus obtained contain, respectively, 0 µg, about 0.3 µg, 0.6 µg, 0.9 µg, 1.5 µg and 3 µg of vinyl chloride. Shake, avoiding contact between the stopper and the liquid. Place the vials in a water-bath at 60 ± 1 °C for 2 h.

Column:
- *material*: stainless steel;
- *size*: *l* = 3 m, Ø = 3 mm;
- *stationary phase*: *silanised diatomaceous earth for gas chromatography R* impregnated with 5 per cent *m/m* of *dimethylstearamide R* and 5 per cent *m/m* of *macrogol 400 R*.

Carrier gas: *nitrogen for chromatography R*.

Flow rate: 30 mL/min.

Temperature:
- *column*: 45 °C;
- *injection port*: 100 °C;
- *detector*: 150 °C.

Detection: flame ionisation.

Injection: 1 mL of the headspace.

Limit:
- *vinyl chloride*: maximum 1 ppm.

Additives

A certain number of additives are added to the polymers to optimise their chemical, physical and mechanical properties in order to adapt them for the intended use. All these additives are chosen from the following list which specifies for each product the maximum allowable content:
- di(2-ethylhexyl)phthalate (plastic additive 01): maximum 40 per cent;
- zinc octanoate (zinc 2-ethylhexanoate) (plastic additive 02): maximum 1 per cent;
- calcium stearate or zinc stearate: maximum 1 per cent or 1 per cent of a mixture of the two;
- *N,N'*-diacylethylenediamines (plastic additive 03): maximum 1 per cent;

- one of the following epoxidised oils: maximum 10 per cent or 10 per cent of a mixture of the two:
  - epoxidised soya oil (plastic additive 04), of which the oxiran oxygen content is 6 per cent to 8 per cent and the iodine value is not greater than 6;
  - epoxidised linseed oil (plastic additive 05), of which the oxiran oxygen content is not greater than 10 per cent and the iodine value is not greater than 7.

Very low amounts of antioxidants added to the vinyl chloride monomer may be detected in the polymer.

No antioxidant additive may be added to the polymer.

Ultramarine blue is the only colouring material permitted to be added.

The supplier of the material must be able to demonstrate that the qualitative and quantitative composition of the type sample is satisfactory for each production batch.

CHARACTERS

Colourless or pale yellow powder, beads, granules or, after transformation, translucent sheets of varying thickness or containers, with a slight odour. On combustion it gives off dense, black smoke.

IDENTIFICATION

If necessary, before use, cut the samples of the material to be examined into pieces of maximum dimension on a side of not greater than 1 cm.

To 2.0 g of the material to be examined add 200 mL of *peroxide-free ether R* and heat under a reflux condenser for 8 h. Separate the residue B and the solution A by filtration.

Evaporate solution A to dryness under reduced pressure in a water-bath at 30 °C. Dissolve the residue in 10 mL of *toluene R* (solution A1). Dissolve the residue B in 60 mL of *ethylene chloride R*, heating on a water-bath under a reflux condenser. Filter. Add the solution obtained dropwise and with vigorous shaking to 600 mL of *heptane R* heated almost to boiling. Separate the coagulum B1 and the organic solution by hot filtration. Allow the latter to cool; separate the precipitate B2 that forms and filter through a tared sintered-glass filter (40) (*2.1.2*).

A. Infrared absorption spectrophotometry (*2.2.24*).

Preparation. Dissolve the coagulum B1 in 30 mL of *tetrahydrofuran R* and add, in small volumes with shaking, 40 mL of *anhydrous ethanol R*. Separate the precipitate B3 by filtration and dry *in vacuo* at a temperature not exceeding 50 °C over *diphosphorus pentoxide R*. Dissolve a few milligrams of precipitate B3 in 1 mL of *tetrahydrofuran R*, place a few drops of the solution obtained on a sodium chloride plate and evaporate to dryness in an oven at 100-105 °C.

Comparison: *poly(vinyl chloride) CRS*.

B. Infrared absorption spectrophotometry (*2.2.24*).

Examine the residue C obtained in the test for plastic additives 01, 04 and 05.

Comparison: *plastic additive 01 CRS*.

TESTS

If necessary, before use, cut the samples of the material to be examined into pieces of maximum dimension on a side of not greater than 1 cm.

Solution S1. Place 5.0 g of the material to be examined in a combustion flask. Add 30 mL of *sulfuric acid R* and heat until a black, syrupy mass is obtained. Cool and add carefully 10 mL of *strong hydrogen peroxide solution R*. Heat gently. Allow to cool and add 1 mL of *strong hydrogen peroxide solution R*; repeat by alternating evaporation and addition of hydrogen peroxide solution until a colourless liquid is obtained. Reduce the volume to about 10 mL. Cool and dilute to 50.0 mL with *water R*.

Solution S2. Place 25 g of the material to be examined in a borosilicate-glass flask. Add 500 mL of *water for injections R* and cover the neck of the flask with a borosilicate-glass beaker. Heat in an autoclave at 121 ± 2 °C for 20 min. Allow to cool and decant the solution. Make the volume up to 500 mL.

Appearance of solution S2. Solution S2 is clear (*2.2.1*) and colourless (*2.2.2, Method II*).

Acidity or alkalinity. To 100 mL of solution S2, add 0.15 mL of *BRP indicator solution R*. Not more than 1.5 mL of *0.01 M sodium hydroxide* is required to change the colour of the indicator to blue. To 100 mL of solution S2 add 0.2 mL of *methyl orange solution R*. Not more than 1.0 mL of *0.01 M hydrochloric acid* is required to initiate the colour change of the indicator from yellow to orange.

Absorbance (*2.2.25*). Evaporate 100.0 mL of solution S2 to dryness. Dissolve the residue in 5.0 mL of *hexane R*. From 250 nm to 310 nm the absorbance is not greater than 0.25.

Reducing substances. *Carry out the test within 4 h of preparation of solution S2*. To 20.0 mL of solution S2 add 1 mL of *dilute sulfuric acid R* and 20.0 mL of *0.002 M potassium permanganate*. Boil under a reflux condenser for 3 min and cool immediately. Add 1 g of *potassium iodide R* and titrate immediately with *0.01 M sodium thiosulfate*, using 0.25 mL of *starch solution R* as indicator. Carry out a blank titration using 20 mL of *water for injections R*. The difference between the two titration volumes is not more than 2.0 mL.

Primary aromatic amines: maximum 20 ppm.

To 2.5 mL of solution A1 obtained during the identification, add 6 mL of *water R* and 4 mL of *0.1 M hydrochloric acid*. Shake vigorously and discard the upper layer. To the aqueous layer add 0.4 mL of a freshly prepared 10 g/L solution of *sodium nitrite R*. Mix and allow to stand for 1 min. Add 0.8 mL of a 25 g/L solution of *ammonium sulfamate R*, allow to stand for 1 min and add 2 mL of a 5 g/L solution of *naphthylethylenediamine dihydrochloride R*. After 30 min, any colour in the solution is not more intense than that in a standard prepared at the same time in the same manner replacing the aqueous layer with a mixture of 1 mL of a 0.01 g/L solution of *naphthylamine R* in *0.1 M hydrochloric acid*, 5 mL of *water R* and 4 mL of *0.1 M hydrochloric acid* instead of the aqueous layer.

Plastic additives 01, 04 and 05. Thin-layer chromatography (*2.2.27*).

Reference solutions. Prepare 0.1 mg/mL solutions of *plastic additive 01 CRS*, *plastic additive 04 CRS* and *plastic additive 05 CRS*, respectively, in *toluene R*.

Plate: *TLC silica gel GF_{254} plate R*.

Mobile phase: *toluene R*.

Application: 0.5 mL of solution A1 obtained during the identification as a band 30 mm by 3 mm and 5 µL of each reference solution.

Development: over a path of 15 cm.

Drying: in air.

Detection A: examine in ultraviolet light at 254 nm.

Locate the zone corresponding to plastic additive 01 (R_F = about 0.4). Remove the area of silica gel corresponding to this zone and shake with 40 mL of *ether R* for 1 min. Filter, rinse with two quantities, each of 10 mL of *ether R*, add the rinsings to the filtrate and evaporate to dryness. The residue C weighs not more than 40 mg.

Detection B: expose the plate to iodine vapour for 5 min.

Examine the chromatogram and locate the band corresponding to plastic additives 04 and 05 (R_F = 0). Remove the area of silica gel corresponding to this zone. Similarly remove a corresponding area of silica gel as a blank reference. Separately shake both samples for 15 min with 40 mL of *methanol R*. Filter, rinse with 2 quantities, each of 10 mL of *methanol R*,

add the rinsings to the filtrate and evaporate to dryness. The difference between the masses of both residues is not more than 10 mg.

Plastic additive 03.

Wash precipitate B2 obtained during the identification and contained in the tared sintered-glass filter (40) (*2.1.2*) with *anhydrous ethanol R*. Dry to constant mass over *diphosphorus pentoxide R* and weigh the filter. The residue weighs not more than 20 mg.

Infrared absorption spectrophotometry (*2.2.24*).

Preparation: the residue obtained above.

Comparison: *plastic additive 03 CRS*.

Barium: maximum 5 ppm.

Inductively coupled plasma-atomic emission spectrometry (*2.2.57*).

Test solution. Ignite 1.0 g of the substance to be examined in a silica crucible. Take up the residue with 10 mL of *hydrochloric acid R* and evaporate to dryness on a water-bath. Take up the residue with 20 mL of *0.1 M hydrochloric acid*.

Reference solution. A solution containing 0.25 ppm of barium prepared by dilution of *barium standard solution (50 ppm Ba) R* with *0.1 M hydrochloric acid*.

Wavelength: use the emission of barium at 455.40 nm, the spectral background being taken at 455.30 nm.

Verify the absence of barium in the hydrochloric acid used.

Cadmium: maximum 0.6 ppm.

Atomic absorption spectrometry (*2.2.23, Method I*).

Test solution. Evaporate 10 mL of solution S1 to dryness. Take up the residue using 5 mL of a 1 per cent *V/V* solution of *hydrochloric acid R*, filter and dilute the filtrate to 10.0 mL with the same acid solution.

Reference solutions. Prepare the reference solutions using *cadmium standard solution (0.1 per cent Cd) R*, diluting with a 1 per cent *V/V* solution of *hydrochloric acid R*.

Source: cadmium hollow-cathode lamp.

Wavelength: 228.8 nm.

Atomisation device: air-acetylene flame.

Verify the absence of cadmium in the hydrochloric acid used.

Calcium: maximum 0.07 per cent.

Inductively coupled plasma-atomic emission spectrometry (*2.2.57*).

Test solution. Use the test solution prepared for the determination of barium.

Reference solution. A solution containing 50.0 ppm of calcium prepared by dilution of *calcium standard solution (400 ppm Ca) R* with *0.1 M hydrochloric acid*.

Wavelength: use the emission of calcium at 315.89 nm, the spectral background being taken at 315.60 nm.

Verify the absence of calcium in the hydrochloric acid used.

Tin maximum 20 ppm.

Inductively coupled plasma-atomic emission spectrometry (*2.2.57*).

Test solution. Dilute solution S1 10 times with *water R* immediately before use.

Reference solution. Introduce 2 mL of *tin standard solution (5 ppm Sn) R* into a 50 mL flask containing 5 mL of a 20 per cent *V/V* solution of *sulfuric acid R* and dilute to 50 mL with *water R* immediately before use.

Wavelength: use the emission of tin at 189.99 nm, the spectral background being taken at 190.10 nm.

Verify the absence of tin in the sulfuric acid used.

Zinc maximum 0.2 per cent.

Atomic absorption spectrometry (*2.2.23, Method I*).

Test solution. Dilute solution S1 100 times with *0.1 M hydrochloric acid*.

Reference solutions. Prepare the reference solutions using *zinc standard solution (100 ppm Zn) R*, diluting with *0.1 M hydrochloric acid*.

Source: zinc hollow-cathode lamp.

Wavelength: 213.9 nm.

Atomisation device: air-acetylene flame.

Verify the absence of zinc in the hydrochloric acid used.

Heavy metals (*2.4.8*): maximum 50 ppm.

To 10 mL of solution S1 add 0.5 mL of *phenolphthalein solution R* and then *strong sodium hydroxide solution R* until a pale pink colour is obtained. Dilute to 25 mL with *water R*. 12 mL of the solution complies with test A. Prepare the reference solution using *lead standard solution (2 ppm Pb) R*.

Water extractable substances: maximum 0.3 per cent.

Evaporate 50 mL of solution S2 to dryness on a water-bath and dry in an oven at 100-105 °C to constant mass. Carry out a blank test with 50.0 mL of *water for injections R*. The residue weighs not more than 7.5 mg taking into account the blank test.

ASSAY

Carry out the oxygen-flask method (*2.5.10*) using 50.0 mg. Absorb the combustion products in 20 mL of *1 M sodium hydroxide*. To the solution obtained add 1 mL of *dibutyl phthalate R*, 2.5 mL of *nitric acid R*, 5 mL of *ferric ammonium sulfate solution R2* and 10.0 mL of *0.1 M silver nitrate*. Titrate with *0.05 M ammonium thiocyanate* until a reddish-yellow colour is obtained. Carry out a blank test.

1 mL of *0.1 M silver nitrate* is equivalent to 6.25 mg of poly(vinyl chloride).

In addition, the following tests are carried out on the sterile and empty containers.

Solution S3. If the container to be examined contains an anticoagulant solution, empty the container and wash the inside with 250 mL of *water for injections R* at 20 ± 1 °C and discard the washings before the preparation of solution S3. Introduce into the container a volume of *water for injections R* corresponding to the volume of solution. Close the container and heat in an autoclave so that the temperature of the liquid is maintained at 110 °C for 30 min. After cooling, fill the container with *water for injections R* to its nominal volume and homogenise.

Reference solution. Heat *water for injections R* in a borosilicate-glass flask in an autoclave at 110 °C for 30 min.

Reducing substances. Immediately after preparation of solution S3, transfer to a borosilicate-glass flask a volume corresponding to 8 per cent of the nominal volume of the container. At the same time, prepare a blank using an equal volume of the freshly prepared reference solution in another borosilicate-glass flask. To each solution add 20.0 mL of *0.002 M potassium permanganate* and 1 mL of *dilute sulfuric acid R*. Allow to stand protected from light for 15 min. To each solution add 0.1 g of *potassium iodide R*. Allow to stand protected from light for 5 min and titrate immediately with *0.01 M sodium thiosulfate*, using 0.25 mL of *starch solution R* as indicator. The difference between the two titrations is not more than 2.0 mL.

Acidity or alkalinity. To a volume of solution S3 corresponding to 4 per cent of the nominal capacity of the container add 0.1 mL of *phenolphthalein solution R*. The solution remains colourless. Add 0.4 mL of *0.01 M sodium hydroxide*. The solution is pink. Add 0.8 mL of *0.01 M hydrochloric acid* and 0.1 mL of *methyl red solution R*. The solution is orange-red or red.

Chlorides (*2.4.4*): maximum 0.4 ppm, determined on solution S3. Prepare the standard using a mixture of 1.2 mL of *chloride standard solution (5 ppm Cl) R* and 13.8 mL of *water R*.

Ammonium (*2.4.1, Method A*): maximum 2 ppm.

Dilute 5 mL of solution S3 to 14 mL with *water R*.

Water extractable substances. Evaporate 100 mL of solution S3 to dryness on a water-bath. Dry in an oven to constant mass at 100-105 °C. Carry out a blank test using 100 mL of the reference solution. The residue from solution S3 weighs not more than 3 mg, taking into account the blank test.

Absorbance (*2.2.25*): maximum 0.30, determined between wavelengths of 230 nm and 250 nm on solution S3; maximum 0.10, determined between wavelengths of 251 nm and 360 nm on solution S3. Use the reference solution as the compensation liquid.

Extractable plastic additive 01. Use as the extraction solvent, *ethanol (96 per cent) R* diluted with *water R* to have a relative density (*2.2.5*) of 0.9389 to 0.9395, measured with a densimeter.

Stock solution. Dissolve 0.100 g of *plastic additive 01 CRS* in the extraction solvent and dilute to 100.0 mL with the same solvent.

Standard solutions. Into 5 separate 100 mL volumetric flasks, introduce respectively 1.0 mL, 2.0 mL, 5.0 mL, 10.0 mL, and 20.0 mL of stock solution.

Measure the absorbances (*2.2.25*) of the standard solutions at the absorption maximum at 272 nm, using the extraction solvent as compensation liquid and plot a curve of absorbance against the concentration of plastic additive 01.

Extraction procedure. Using the donor tubing and the needle or adapter, fill the empty container with a volume equal to half the nominal volume with the extraction solvent, previously heated to 37 °C in a well-stoppered flask. Expel the air completely from the container and seal the donor tubing. Immerse the filled container in a horizontal position in a water-bath maintained at 37 ± 1 °C for 60 ± 1 min without shaking. Remove the container from the water-bath, invert it gently 10 times and transfer the contents to a glass flask. Immediately measure the absorbance at the absorption maximum at 272 nm, using the extraction solvent as compensation liquid.

Determine the concentration of plastic additive 01 in milligrams per 100 mL of extract from the calibration curve. The concentration does not exceed:

- 10 mg per 100 mL for containers of nominal volume greater than 300 mL but not greater than 500 mL;
- 13 mg per 100 mL for containers of nominal volume greater than 150 mL but not greater than 300 mL;
- 14 mg per 100 mL for containers of nominal volume up to 150 mL.

Where containers contain an anticoagulant solution, this solution complies with the monograph on Anticoagulant and preservative solutions for human blood (0209) and the following additional test.

Absorbance (*2.2.25*): maximum 0.5, by measuring at the absorption maximum at 280 nm.

Measure the absorbance of the anticoagulant solution from the container between 250 nm and 350 nm, using as the compensation liquid an anticoagulant solution of the same composition that has not been in contact with a plastic material.

01/2008:90002
corrected 7.5

3.1.1.2. MATERIALS BASED ON PLASTICISED POLY(VINYL CHLORIDE) FOR TUBING USED IN SETS FOR THE TRANSFUSION OF BLOOD AND BLOOD COMPONENTS

DEFINITION

Content: minimum 55 per cent of poly(vinyl chloride).

The plasticiser used is di(2-ethylhexyl) phthalate (plastic additive 01).

PRODUCTION

Materials based on plasticised poly(vinyl chloride) are produced by polymerisation methods that guarantee a residual vinyl chloride content of less than 1 ppm. The manufacturing process is validated to demonstrate that the product complies with the following test.

Vinyl chloride. Head-space gas chromatography (*2.2.28*).

Internal standard solution. Using a microsyringe, inject 10 µL of *ether R* into 20.0 mL of *dimethylacetamide R*, immersing the tip of the needle in the solvent. Immediately before use, dilute the solution to 1000 times its volume with *dimethylacetamide R*.

Test solution. Place 1.000 g of the material to be examined in a 50 mL vial and add 10.0 mL of the internal standard solution. Close the vial and secure the stopper. Shake, avoiding contact between the stopper and the liquid. Place the vial in a water-bath at 60 ± 1 °C for 2 h.

Vinyl chloride primary solution. Prepare in a fume cupboard. Place 50.0 mL of *dimethylacetamide R* in a 50 mL vial, stopper the vial, secure the stopper and weigh to the nearest 0.1 mg. Fill a 50 mL polyethylene or polypropylene syringe with gaseous *vinyl chloride R*, allow the gas to remain in contact with the syringe for about 3 min, empty the syringe and fill again with 50 mL of gaseous *vinyl chloride R*. Fit a hypodermic needle to the syringe and reduce the volume of gas in the syringe from 50 mL to 25 mL. Inject the remaining 25 mL of vinyl chloride slowly into the vial shaking gently and avoiding contact between the liquid and the needle. Weigh the vial again; the increase in mass is about 60 mg (1 µL of the solution thus obtained contains about 1.2 µg of vinyl chloride). Allow to stand for 2 h. Keep the primary solution in a refrigerator.

Vinyl chloride standard solution: vinyl chloride primary solution, *dimethylacetamide R* (1:3 *V/V*).

Reference solutions. Place 10.0 mL of the internal standard solution in each of six 50 mL vials. Close the vials and secure the stoppers. Inject 1 µL, 2 µL, 3 µL, 5 µL and 10 µL, respectively, of the vinyl chloride standard solution into 5 of the vials. The 6 solutions thus obtained contain respectively, 0 µg, about 0.3 µg, 0.6 µg, 0.9 µg, 1.5 µg and 3 µg of vinyl chloride. Shake, avoiding contact between the stopper and the liquid. Place the vials in a water-bath at 60 ± 1 °C for 2 h.

Column:
- *material*: stainless steel;
- *size*: *l* = 3 m, Ø = 3 mm;
- *stationary phase*: *silanised diatomaceous earth for gas chromatography R* impregnated with 5 per cent *m/m* of *dimethylstearamide R* and 5 per cent *m/m* of *macrogol 400 R*.

Carrier gas: *nitrogen for chromatography R*.

Flow rate: 30 mL/min.

Temperature:
- *column*: 45 °C;
- *injection port*: 100 °C;
- *detector*: 150 °C.

Detection: flame ionisation.

Injection: 1 mL of the head space.

Limit:

– *vinyl chloride*: maximum 1 ppm.

The supplier of the material must be able to demonstrate that the qualitative and quantitative composition of the type sample is satisfactory for each production batch.

CHARACTERS

Almost colourless or pale-yellow material in the form of powder, beads, granules or, after transformation, tubes with a slight odour.

On combustion it gives off dense, black smoke.

IDENTIFICATION

If necessary, cut the samples of the material to be examined into pieces with a maximum dimension on a side of not greater than 1 cm.

A. To 0.5 g add 30 mL of *tetrahydrofuran R*. Heat with stirring on a water-bath in a fume cupboard for 10 min. The material dissolves completely. Add *methanol R* dropwise with stirring. A granular precipitate is formed. Filter the precipitate and dry at 60 °C. Examine the precipitate by infrared absorption spectrophotometry (*2.2.24*). Dissolve 50 mg in 2 mL of *tetrahydrofuran R* and pour on a glass slide. Dry in an oven at 80 °C, remove the film and fix on a suitable mount. Examine by infrared absorption spectrophotometry (*2.2.24*), comparing with the spectrum obtained with *poly(vinyl chloride) CRS*.

B. Infrared absorption spectrophotometry (*2.2.24*). Examine the residue obtained in the test plastic additive 01.

Comparison: *plastic additive 01 CRS*.

TESTS

If necessary, cut the samples of the material to be examined into pieces with a maximum dimension on a side of not greater than 1 cm.

Solution S1. Place 5.0 g of the material to be examined in a combustion flask. Add 30 mL of *sulfuric acid R* and heat until a black, syrupy mass is obtained. Cool and add carefully 10 mL of *strong hydrogen peroxide solution R*. Heat gently. Allow to cool and add 1 mL of *strong hydrogen peroxide solution R*; repeat by alternating evaporation and addition of hydrogen peroxide solution until a colourless liquid is obtained. Reduce the volume to about 10 mL. Cool and dilute to 50.0 mL with *water R*.

Solution S2. Place 25 g of the material to be examined in a borosilicate-glass flask. Add 500 mL of *water R* and cover the neck of the flask with a borosilicate-glass beaker. Heat in an autoclave at 121 ± 2 °C for 20 min. Allow to cool then decant the solution and make up to a volume of 500 mL.

Appearance of solution S2. Solution S2 is clear (*2.2.1*) and colourless (*2.2.2, Method II*).

Plastic additive 01. Thin-layer chromatography (*2.2.27*).

Test solution. To 2.0 g of the material to be examined add 200 mL of *peroxide-free ether R* and heat under a reflux condenser for 8 h. Separate the residue and the solution by filtration and evaporate the solution to dryness under reduced pressure in a water-bath at 30 °C. Dissolve the residue in 10 mL of *toluene R*.

Reference solution. Dissolve 0.8 g of *plastic additive 01 CRS* in *toluene R* and dilute to 10 mL with the same solvent.

Plate: *TLC silica gel G plate R*.

Mobile phase: *toluene R*.

Application: 0.5 mL of the test solution and 5 µL of the reference solution, as a band 30 mm by 3 mm.

Development: over a path of 15 cm.

Drying: in air.

Detection: in ultraviolet light at 254 nm.

Limit: locate the zone corresponding to plastic additive 01. Remove the area of silica gel corresponding to this zone and shake with 40 mL of *ether R*. Filter without loss and evaporate to dryness. The residue weighs not more than 40 mg.

Barium: maximum 5 ppm.

Inductively coupled plasma-atomic emission spectrometry (*2.2.57*).

Test solution. Ignite 1.0 g of the substance to be examined in a silica crucible. Take up the residue with 10 mL of *hydrochloric acid R* and evaporate to dryness on a water-bath. Take up the residue with 20 mL of *0.1 M hydrochloric acid*.

Reference solution. A solution containing 0.25 ppm of barium prepared by dilution of *barium standard solution (50 ppm Ba) R* with *0.1 M hydrochloric acid*.

Wavelength: use the emission of barium at 455.40 nm, the spectral background being taken at 455.30 nm.

Verify the absence of barium in the hydrochloric acid used.

Cadmium: maximum 0.6 ppm.

Atomic absorption spectrometry (*2.2.23, Method I*).

Test solution. Evaporate 10.0 mL of solution S1 to dryness. Take up the residue using 5 mL of a 1 per cent *V/V* solution of *hydrochloric acid R*, filter and dilute the filtrate to 10.0 mL with the same acid.

Reference solutions. Prepare the reference solutions using *cadmium standard solution (0.1 per cent Cd) R*, diluting with a 1 per cent *V/V* solution of *hydrochloric acid R*.

Source: cadmium hollow-cathode lamp.

Wavelength: 228.8 nm.

Atomisation device: air-acetylene flame.

Verify the absence of cadmium in the hydrochloric acid used.

Tin: maximum 20 ppm.

Inductively coupled plasma-atomic emission spectrometry (*2.2.57*).

Test solution. Dilute solution S1 10 times with *water R* immediately before use.

Reference solution. Introduce 2 mL of *tin standard solution (5 ppm Sn) R* into a 50 mL flask containing 5 mL of a 20 per cent *V/V* solution of *sulfuric acid R* and dilute to 50 mL with *water R* immediately before use.

Wavelength: use the emission of tin at 189.99 nm, the spectral background being taken at 190.10 nm.

Verify the absence of tin in the sulfuric acid used.

Heavy metals (*2.4.8*): maximum 50 ppm.

To 10 mL of solution S1 add 0.5 mL of *phenolphthalein solution R* and then *strong sodium hydroxide solution R* until a pale pink colour is obtained. Dilute to 25 mL with *water R*. 12 mL of the solution complies with test A. Prepare the reference solution using *lead standard solution (2 ppm Pb) R*.

ASSAY

To 0.500 g add 30 mL of *tetrahydrofuran R* and heat with stirring on a water-bath in a fume cupboard for 10 min. The material dissolves completely. Add 60 mL of *methanol R* dropwise with stirring. A granular precipitate of poly(vinyl chloride) is formed. Allow to stand for a few minutes. Continue addition of *methanol R* until no further precipitation is observed. Transfer to a sintered-glass filter (40) (*2.1.2*), using three small quantities of *methanol R* to aid transfer and to wash the precipitate. Dry the filter and the precipitate to constant mass at 60 °C and weigh.

In addition, carry out the following tests on sterilised sets.

Solution S3. Make a closed circulation system from 3 sets and a 300 mL borosilicate-glass vessel. Fit to the vessel a suitable thermostat device that maintains the temperature of the liquid in the vessel at 37 ± 1 °C. Circulate 250 mL of *water for injections R* through the system in the direction used for transfusion for 2 h at a rate of 1 L/h (for example

using a peristaltic pump applied to as short a piece of suitable silicone elastomer tubing as possible). Collect the whole of the solution and allow to cool.

Appearance of solution. Solution S3 is clear (*2.2.1*) and colourless (*2.2.2, Method II*).

Acidity or alkalinity. To 25 mL of solution S3 add 0.15 mL of *BRP indicator solution R*. Not more than 0.5 mL of *0.01 M sodium hydroxide* is required to change the colour of the indicator to blue. To 25 mL of solution S3 add 0.2 mL of *methyl orange solution R*. Not more than 0.5 mL of *0.01 M hydrochloric acid* is required to initiate the colour change of the indicator from yellow to orange.

Absorbance (*2.2.25*): maximum 0.30, determined between wavelengths of 230 nm and 250 nm on solution S3; maximum 0.15, determined between wavelengths of 251 nm and 360 nm on solution S3.

Reducing substances. Carry out the test within 4 h of preparation of solution S3. To 20.0 mL of solution S3 add 1 mL of *dilute sulfuric acid R* and 20.0 mL of *0.002 M potassium permanganate*. Boil for 3 min and cool immediately. Add 1 g of *potassium iodide R* and titrate with *0.01 M sodium thiosulfate* using 0.25 mL of *starch solution R* as indicator. Carry out a blank test using 20 mL of *water for injections R*. The difference between the titration volumes is not greater than 2.0 mL.

Water extractable substances. Evaporate 50.0 mL of solution S3 to dryness on a water-bath and dry to constant mass in an oven at 100-105 °C. Carry out a blank test using 50.0 mL of *water for injections R*. The residue obtained with solution S3 is not greater than 1.5 mg, taking account of the blank test.

01/2008:30103
corrected 7.5

3.1.3. POLYOLEFINS

DEFINITION

Polyolefins are obtained by polymerisation of ethylene or propylene or by copolymerisation of these substances with not more than 25 per cent of higher homologues (C_4 to C_{10}) or of carboxylic acids or of esters. Certain materials may be mixtures of polyolefins.

PRODUCTION

A certain number of additives are added to the polymer in order to optimise their chemical, physical and mechanical properties in order to adapt them for the intended use. All of these additives are chosen from the appended list which specifies for each product the maximum allowable content.

They may contain at most 3 antioxidants, 1 or several lubricants or antiblocking agents as well as titanium dioxide as an opacifying agent when the material must provide protection from light.

- butylhydroxytoluene (plastic additive 07): maximum 0.125 per cent;
- pentaerythrityl tetrakis[3-(3,5-di-*tert*-butyl-4-hydroxyphenyl)propionate] (plastic additive 09): maximum 0.3 per cent;
- 1,3,5-tris(3,5-di-*tert*-butyl-4-hydroxybenzyl)-*S*-triazine-2,4,6(1*H*,3*H*,5*H*)-trione, (plastic additive 13): maximum 0.3 per cent;
- octadecyl 3-(3,5-di-*tert*-butyl-4-hydroxyphenyl)propionate (plastic additive 11): maximum 0.3 per cent;
- ethylene bis[3,3-bis[3-(1,1-dimethylethyl)-4-hydroxyphenyl]butanoate] (plastic additive 08): maximum 0.3 per cent;
- dioctadecyl disulfide (plastic additive 15): maximum 0.3 per cent;
- 4,4′,4″-(2,4,6-trimethylbenzene-1,3,5-triyltrismethylene)tris[2,6-bis(1,1-dimethylethyl)phenol] (plastic additive 10): maximum 0.3 per cent;
- 2,2′-bis(octadecyloxy)-5,5′-spirobi[1,3,2-dioxaphosphinane] (plastic additive 14): maximum 0.3 per cent;
- didodecyl 3,3′-thiodipropionate (plastic additive 16): maximum 0.3 per cent;
- dioctadecyl 3,3′-thiodipropionate (plastic additive 17): maximum 0.3 per cent;
- tris[2,4-bis(1,1-dimethylethyl)phenyl] phosphite (plastic additive 12): maximum 0.3 per cent;
- plastic additive 18: maximum 0.1 per cent;
- copolymer of dimethyl succinate and (4-hydroxy-2,2,6,6-tetramethylpiperidin-1-yl)ethanol (plastic additive 22): maximum 0.3 per cent.

The total of antioxidant additives listed above does not exceed 0.3 per cent.

- hydrotalcite: maximum 0.5 per cent;
- alkanamides: maximum 0.5 per cent;
- alkenamides: maximum 0.5 per cent;
- sodium silico-aluminate: maximum 0.5 per cent;
- silica: maximum 0.5 per cent;
- sodium benzoate: maximum 0.5 per cent;
- fatty acid esters or salts: maximum 0.5 per cent;
- trisodium phosphate: maximum 0.5 per cent;
- liquid paraffin: maximum 0.5 per cent;
- zinc oxide: maximum 0.5 per cent;
- talc: maximum 0.5 per cent;
- magnesium oxide: maximum 0.2 per cent;
- calcium stearate or zinc stearate or a mixture of both: maximum 0.5 per cent;
- titanium dioxide: maximum 4 per cent.

The supplier of the material must be able to demonstrate that the qualitative and quantitative composition of the type sample is satisfactory for each production batch.

CHARACTERS

Appearance: powder, beads, granules or, after transformation, sheets of varying thickness or containers.

Solubility: practically insoluble in water, soluble in hot aromatic hydrocarbons, practically insoluble in anhydrous ethanol, in hexane and in methanol.

They soften at temperatures between 65 °C and 165 °C. They burn with a blue flame.

IDENTIFICATION

If necessary, cut the samples of the material to be examined into pieces of maximum dimension on a side of not greater than 1 cm.

A. Infrared absorption spectrophotometry (*2.2.24*).

Preparation: to 0.25 g add 10 mL of *toluene R* and boil under a reflux condenser for about 15 min; place a few drops of the solution obtained on a sodium chloride slide and evaporate the solvent in an oven at 80 °C.

Absorption maxima: at 2920 cm^{-1}, 2850 cm^{-1}, 1475 cm^{-1}, 1465 cm^{-1}, 1380 cm^{-1}, 1170 cm^{-1}, 735 cm^{-1} and 720 cm^{-1}.

The spectrum obtained is identical to the spectrum obtained with the material selected for the type sample. If the material to be examined is in the form of sheets, the identification may be determined directly on a cut piece of suitable size.

B. It complies with the supplementary tests corresponding to the additives present.

C. In a platinum crucible, mix about 20 mg with 1 g of *potassium hydrogen sulfate R* and heat until completely melted. Allow to cool and add 20 mL of *dilute sulfuric acid R*. Heat gently. Filter the resulting solution. To the

filtrate add 1 mL of *phosphoric acid R* and 1 mL of *strong hydrogen peroxide solution R*. If the substance is opacified with titanium dioxide, an orange-yellow colour develops.

TESTS

If necessary, cut the samples of the material to be examined into pieces of maximum dimension on a side of not greater than 1 cm.

Solution S1. *Use solution S1 within 4 h of preparation.* Place 25 g in a borosilicate-glass flask with a ground-glass neck. Add 500 mL of *water for injections R* and boil under a reflux condenser for 5 h. Allow to cool and decant. Reserve a portion of the solution for the test for appearance of solution S1 and filter the rest through a sintered-glass filter (16) (*2.1.2*).

Solution S2. Place 2.0 g in a conical borosilicate-glass flask with a ground-glass neck. Add 80 mL of *toluene R* and boil under a reflux condenser with constant stirring for 90 min. Allow to cool to 60 °C and add with continued stirring 120 mL of *methanol R*. Filter the solution through a sintered-glass filter (16) (*2.1.2*). Rinse the flask and the filter with 25 mL of a mixture of 40 mL of *toluene R* and 60 mL of *methanol R*, add the rinsings to the filtrate and dilute to 250 mL with the same mixture of solvents. Prepare a blank solution.

Solution S3. Place 100 g in a conical borosilicate-glass flask with a ground-glass neck. Add 250 mL of *0.1 M hydrochloric acid* and boil under a reflux condenser with constant stirring for 1 h. Allow to cool and decant the solution.

Appearance of solution S1. Solution S1 is clear (*2.2.1*) and colourless (*2.2.2, Method II*).

Acidity or alkalinity. To 100 mL of solution S1, add 0.15 mL of *BRP indicator solution R*. Not more than 1.5 mL of *0.01 M sodium hydroxide* is required to change the colour of the indicator to blue. To 100 mL of solution S1 add 0.2 mL of *methyl orange solution R*. Not more than 1 mL of *0.01 M hydrochloric acid* is required to initiate the colour change of the indicator from yellow to orange.

Absorbance (*2.2.25*): maximum 0.2, determined between wavelengths of 220 nm and 340 nm on solution S1.

Reducing substances. To 20 mL of solution S1 add 1 mL of *dilute sulfuric acid R* and 20 mL of *0.002 M potassium permanganate*. Boil under a reflux condenser for 3 min and cool immediately. Add 1 g of *potassium iodide R* and titrate immediately with *0.01 M sodium thiosulfate*, using 0.25 mL of *starch solution R* as indicator. Carry out a blank titration. The difference between the titration volumes is not more than 3.0 mL.

Substances soluble in hexane. Place 10 g in a 250 mL conical borosilicate-glass flask with a ground-glass neck. Add 100 mL of *hexane R* and boil under a reflux condenser for 4 h, stirring constantly. Cool in iced water and filter rapidly (the filtration time must be less than 5 min; if necessary the filtration may be accelerated by applying pressure to the solution) through a sintered-glass filter (16) (*2.1.2*) maintaining the solution at about 0 °C. Evaporate 20 mL of the filtrate in a tared borosilicate-glass dish on a water-bath. Dry the residue in an oven at 100-105 °C for 1 h. The mass of the residue obtained must be within 10 per cent of that of the residue obtained with the type sample and does not exceed 5 per cent.

Extractable aluminium: maximum 1 ppm.

Inductively coupled plasma-atomic emission spectrometry (*2.2.57*).

Test solution. Use solution S3.

Reference solutions. Prepare the reference solutions using *aluminium standard solution (200 ppm Al) R*, diluting with *0.1 M hydrochloric acid*.

Wavelength: use the emission of aluminium at 396.15 nm, the spectral background being taken as 396.25 nm.

Verify the absence of aluminium in the hydrochloric acid used.

Extractable titanium: maximum 1 ppm.

Inductively coupled plasma-atomic emission spectrometry (*2.2.57*).

Test solution. Use solution S3.

Reference solutions. Prepare the reference solutions using *titanium standard solution (100 ppm Ti) R*, diluting with *0.1 M hydrochloric acid*.

Wavelength: use the emission of titanium at 336.12 nm, the spectral background being taken as 336.16 nm.

Verify the absence of titanium in the hydrochloric acid used.

Extractable zinc: maximum 1 ppm.

Atomic absorption spectrometry (*2.2.23, Method I*).

Test solution. Use solution S3.

Reference solutions. Prepare the reference solutions using *zinc standard solution (10 ppm Zn) R*, diluting with *0.1 M hydrochloric acid*.

Source: zinc hollow-cathode lamp.

Wavelength: 213.9 nm.

Atomisation device: air-acetylene flame.

Verify the absence of zinc in the hydrochloric acid used.

Extractable heavy metals (*2.4.8*): maximum 2.5 ppm.

Evaporate 50 mL of solution S3 to about 5 mL on a water-bath and dilute to 20.0 mL with *water R*. 12 mL of the solution complies with test A. Prepare the reference solution using 2.5 mL of *lead standard solution (10 ppm Pb) R*.

Sulfated ash (*2.4.14*): maximum 1.0 per cent, determined on 5.0 g. This limit does not apply to material that has been opacified with titanium dioxide.

SUPPLEMENTARY TESTS

These tests are to be carried out, in whole or in part, only if required by the stated composition or the use of the material.

Phenolic antioxidants. Liquid chromatography (*2.2.29*).

Solvent mixture: *acetonitrile R*, *tetrahydrofuran R* (50:50 *V/V*).

Test solution S21. Evaporate 50 mL of solution S2 to dryness *in vacuo* at 45 °C. Dissolve the residue in 5.0 mL of the solvent mixture. Prepare a blank solution from the blank solution corresponding to solution S2.

Test solution S22. Evaporate 50 mL of solution S2 to dryness *in vacuo* at 45 °C. Dissolve the residue with 5.0 mL of *methylene chloride R*. Prepare a blank solution from the blank solution corresponding to solution S2.

Test solution S23. Evaporate 50 mL of solution S2 to dryness *in vacuo* at 45 °C. Dissolve the residue in 5.0 mL of a mixture of equal volumes of *acetonitrile R* and a 10 g/L solution of *tert-butylhydroperoxide R* in *tetrahydrofuran R*. Close the flask and allow to stand for 1 h. Prepare a blank solution using the blank of solution S2.

Of the following reference solutions, prepare only those that are necessary for the analysis of the phenolic antioxidants stated in the composition of the substance to be examined.

Reference solution (a). Dissolve 25.0 mg of *butylhydroxytoluene CRS* (plastic additive 07) and 60.0 mg of *plastic additive 08 CRS* in 10.0 mL of the solvent mixture. Dilute 2.0 mL of this solution to 50.0 mL with the solvent mixture.

Reference solution (b). Dissolve 60.0 mg of *plastic additive 09 CRS* and 60.0 mg of *plastic additive 10 CRS* in 10.0 mL of the solvent mixture. Dilute 2.0 mL of this solution to 50.0 mL with the solvent mixture.

Reference solution (c). Dissolve 60.0 mg of *plastic additive 11 CRS* and 60.0 mg of *plastic additive 12 CRS* in 10.0 mL of *methylene chloride R*. Dilute 2.0 mL of this solution to 50.0 mL with *methylene chloride R*.

Reference solution (d). Dissolve 25.0 mg of *plastic additive 07 CRS* in 10.0 mL of the solvent mixture. Dilute 2.0 mL of this solution to 50.0 mL with the solvent mixture.

Reference solution (e). Dissolve 60.0 mg of *plastic additive 08 CRS* in 10.0 mL of the solvent mixture. Dilute 2.0 mL of this solution to 50.0 mL with the solvent mixture.

Reference solution (f). Dissolve 60.0 mg of *plastic additive 13 CRS* in 10.0 mL of the solvent mixture. Dilute 2.0 mL of this solution to 50.0 mL with the solvent mixture.

Reference solution (g). Dissolve 60.0 mg of *plastic additive 09 CRS* in 10.0 mL of the solvent mixture. Dilute 2.0 mL of this solution to 50.0 mL with the solvent mixture.

Reference solution (h). Dissolve 60.0 mg of *plastic additive 10 CRS* in 10.0 mL of the solvent mixture. Dilute 2.0 mL of this solution to 50.0 mL with the solvent mixture.

Reference solution (i). Dissolve 60.0 mg of *plastic additive 11 CRS* in 10.0 mL of *methylene chloride R*. Dilute 2.0 mL of this solution to 50.0 mL with *methylene chloride R*.

Reference solution (j). Dissolve 60.0 mg of *plastic additive 12 CRS* in 10.0 mL of *methylene chloride R*. Dilute 2.0 mL of this solution to 50.0 mL with *methylene chloride R*.

Reference solution (k). Dissolve 20.0 mg of *plastic additive 18 CRS* in 10.0 mL of a mixture of equal volumes of *acetonitrile R* and a 10 g/L solution of *tert-butylhydroperoxide R* in *tetrahydrofuran R*. Allow to stand in a closed container for 1 h. Dilute 2.0 mL of this solution to 50.0 mL with the solvent mixture.

A. If the substance to be examined contains plastic additive 07 and/or plastic additive 08, carry out the test as follows.

Column:
- *size*: *l* = 0.25 m, Ø = 4.6 mm;
- *stationary phase*: *octadecylsilyl silica gel for chromatography R* (5 µm).

Mobile phase: *water R*, *acetonitrile R* (30:70 *V/V*).

Flow rate: 2 mL/min.

Detection: spectrophotometer at 280 nm.

Injection: 20 µL of the test solution S21, the corresponding blank solution, the reference solution (a), and either the reference solutions (d) or (e) or the reference solutions (d) and (e).

Run time: 30 min.

System suitability:
- *resolution*: minimum 8.0 between the peaks due to plastic additive 07 and plastic additive 08 in the chromatogram obtained with reference solution (a);
- the chromatogram obtained with test solution S21 only show peaks due to antioxidants stated in the composition and minor peaks that also appear in the chromatogram corresponding to the blank solution.

Limit: the areas of the peaks in the chromatogram obtained with test solution S21 are less than the corresponding areas of the peaks in the chromatograms obtained with reference solutions (d) and/or (e).

B. If the substance to be examined contains one or more of the following antioxidants:
- plastic additive 09;
- plastic additive 10;
- plastic additive 11;
- plastic additive 12;
- plastic additive 13;

carry out the test as described above with the following modifications.

Mobile phase: *water R*, *tetrahydrofuran R*, *acetonitrile R* (10:30:60 *V/V/V*).

Flow rate: 1.5 mL/min.

Injection: 20 µL of the test solution S21, the corresponding blank solution, the reference solution (b) and the reference solutions of the antioxidants on the list above that are stated in the composition.

System suitability:
- *resolution*: minimum 2.0 between the peaks due to plastic additive 09 and plastic additive 10 in the chromatogram obtained with reference solution (b);
- the chromatogram obtained with test solution S21 only show peaks due to antioxidants stated in the composition and minor peaks that also appear in the chromatogram corresponding to the blank solution.

Limit: the areas of the peaks in the chromatogram obtained with test solution S21 are less than the corresponding areas of the peaks in the chromatograms obtained with reference solutions of the antioxidants on the list above that are stated in the composition.

C. If the substance to be examined contains plastic additive 11 and/or plastic additive 12, carry out the test as described for plastic additive 07 and/or plastic additive 08 with the following modifications.

Mobile phase: *water R*, *2-propanol R*, *methanol R* (5:45:50 *V/V/V*).

Flow rate: 1.5 mL/min.

Injection: 20 µL of the test solution S22, the corresponding blank solution, the reference solution (c), and either the reference solution (i) or (j) or the reference solutions (i) and (j).

System suitability:
- *resolution*: minimum 2.0 between the peaks due to plastic additive 11 and plastic additive 12 in the chromatogram obtained with reference solution (c);
- the chromatogram obtained with test solution S22 only show peaks due to antioxidants stated in the composition and minor peaks that also appear in the chromatogram corresponding to the blank solution.

Limit: the areas of the peaks in the chromatogram obtained with test solution S22 are less than the corresponding areas of the peaks in the chromatograms obtained with reference solutions (i) and/or (j).

D. If the substance to be examined contains plastic additive 18, carry out the test as described for plastic additive 07 and/or plastic additive 08 with the following modifications.

Mobile phase: *tetrahydrofuran R*, *acetonitrile R* (20:80 *V/V*).

Flow rate: 1.5 mL/min.

Detection: spectrophotometer at 270 nm.

Injection: 20 µL of the test solution S23, the corresponding blank solution and the reference solution (k).

System suitability:
- *resolution*: minimum 6.0 between the 2 principal peaks (approximate retention times of 3.5 and 5.8) in the chromatogram obtained with reference solution (k);
- the chromatogram obtained with test solution S23 only show peaks due to antioxidants stated in the composition and minor peaks that also appear in the chromatogram corresponding to the blank solution.

Limit: the areas of the peaks in the chromatogram obtained with test solution S23 are less than the corresponding areas of the peaks in the chromatograms obtained with reference solution (k).

Non-phenolic antioxidants. Thin-layer chromatography (*2.2.27*).

Test solution S24. Evaporate 100 mL of solution S2 to dryness *in vacuo* at 45 °C. Dissolve the residue in 2 mL of *acidified methylene chloride R*.

Reference solution (l). Dissolve 60 mg of *plastic additive 14 CRS* in 10 mL of *methylene chloride R*. Dilute 2 mL of this solution to 10 mL with *acidified methylene chloride R*.

Reference solution (m). Dissolve 60 mg of *plastic additive 15 CRS* in 10 mL of *methylene chloride R*. Dilute 2 mL of this solution to 10 mL with *acidified methylene chloride R*.

Reference solution (n). Dissolve 60 mg of *plastic additive 16 CRS* in 10 mL of *methylene chloride R*. Dilute 2 mL of this solution to 10 mL with *acidified methylene chloride R*.

Reference solution (o). Dissolve 60 mg of *plastic additive 17 CRS* in 10 mL of *methylene chloride R*. Dilute 2 mL of this solution to 10 mL with *acidified methylene chloride R*.

Reference solution (p). Dissolve 60 mg of *plastic additive 16 CRS* and 60 mg of *plastic additive 17 CRS* in 10 mL of *methylene chloride R*. Dilute 2 mL of this solution to 10 mL with *acidified methylene chloride R*.

Plate: *TLC silica gel GF_{254} plate R*.

Mobile phase A: *hexane R*.

Mobile phase B: *methylene chloride R*.

Application: 20 µL of the test solution S24, the reference solution (p) and the reference solutions corresponding to all the phenolic and non-phenolic antioxidants mentioned in the type composition of the material to be examined.

Development A: over a path of 18 cm with mobile phase A.

Drying A: in air.

Development B: over a path of 17 cm with mobile phase B.

Drying B: in air.

Detection: examine in ultraviolet light at 254 nm; spray with *alcoholic iodine solution R* and examine in ultraviolet light at 254 nm after 10-15 min.

System suitability: reference solution (p):

– the chromatogram shows 2 clearly separated spots.

Limit: any spots in the chromatogram obtained with test solution S24 are not more intense than the spots in the corresponding positions in the chromatograms obtained with the reference solutions.

Plastic additive 22. Liquid chromatography (*2.2.29*).

Test solution. Evaporate 25 mL of solution S2 to dryness *in vacuo* at 45 °C. Dissolve the residue in 10 mL of *toluene R* and 10 mL of a 10 g/L solution of *tetrabutylammonium hydroxide R* in a mixture of 35 volumes of *toluene R* and 65 volumes of *anhydrous ethanol R*. Boil under a reflux condenser for 3 h. Allow to cool and filter if necessary.

Reference solution. Dissolve 30 mg of *plastic additive 22 CRS* in 50 mL of *toluene R*. Add 1 mL of this solution to 25 mL of blank solution S2 and evaporate to dryness *in vacuo* at 45 °C. Dissolve the residue in 10 mL of *toluene R* and 10 mL of a 10 g/L solution of *tetrabutylammonium hydroxide R* in a mixture of 35 volumes of *toluene R* and 65 volumes of *anhydrous ethanol R*. Boil under a reflux condenser for 3 h. Allow to cool and filter if necessary.

Column:

– *size*: *l* = 0.25 m, Ø = 4.6 mm;
– *stationary phase*: *aminopropylsilyl silica gel for chromatography R* (5 µm).

Mobile phase: *anhydrous ethanol R*, *hexane R* (11:89 *V/V*).

Flow rate: 2 mL/min.

Detection: spectrophotometer at 227 nm.

Injection: 20 µL.

Run time: 10 min.

System suitability:

– *resolution*: minimum 7 between the peaks due to the "diol" component and to the diluent of the reference solution.

Limit: the area of the peak due to the "diol" component from plastic additive 22 in the chromatogram obtained with the test solution is less than the corresponding peak in the chromatogram obtained with the reference solution.

Amides and stearates. Thin-layer chromatography (*2.2.27*).

Test solution. Use test solution S24 described in the test for non-phenolic antioxidants.

Reference solution (q). Dissolve 20 mg of stearic acid (*plastic additive 19 CRS*) in 10 mL of *methylene chloride R*.

Reference solution (r). Dissolve 40 mg of oleamide (*plastic additive 20 CRS*) in 20 mL of *methylene chloride R*.

Reference solution (s). Dissolve 40 mg of erucamide (*plastic additive 21 CRS*) in 20 mL of *methylene chloride R*.

Plate: *TLC silica gel GF_{254} plate R* (2 plates).

A. *Mobile phase*: *anhydrous ethanol R*, *trimethylpentane R* (25:75 *V/V*).

Application: 10 µL of the test solution S24 and reference solution (q).

Development: over a path of 10 cm.

Drying: in air.

Detection: spray with a 2 g/L solution of *dichlorophenolindophenol, sodium salt R* in *anhydrous ethanol R* and heat in an oven at 120 °C for a few minutes to intensify the spots.

Limit: any spot corresponding to plastic additive 19 in the chromatogram obtained with test solution S24 is identical in position to (R_F = about 0.5) but not more intense than the spot in the chromatogram obtained with reference solution (q).

B. *Mobile phase A*: *hexane R*.

Mobile phase B: *methanol R*, *methylene chloride R* (5:95 *V/V*).

Application: 10 µL of the test solution S24 and the reference solutions (r) and (s).

Development A: over a path of 13 cm with mobile phase A.

Drying A: in air.

Development B: over a path of 10 cm with mobile phase B.

Drying B: in air.

Detection: spray with a 40 g/L solution of *phosphomolybdic acid R* in *anhydrous ethanol R*. Heat in an oven at 120 °C until spots appear.

Limit: any spots corresponding to plastic additive 20 or plastic additive 21 in the chromatogram obtained with test solution S24 are identical in position to (R_F = about 0.2) but not more intense than the corresponding spots in the chromatograms obtained with reference solutions (r) and (s).

01/2008:30104
corrected 6.0

3.1.4. POLYETHYLENE WITHOUT ADDITIVES FOR CONTAINERS FOR PARENTERAL PREPARATIONS AND FOR OPHTHALMIC PREPARATIONS

DEFINITION

Polyethylene without additives is obtained by the polymerisation of ethylene under high pressure in the presence of oxygen or free-radical-forming initiators as catalyst.

CHARACTERS

Appearance: beads, granules, powder or, after transformation, translucent sheets of varying thickness or containers.

Solubility: practically insoluble in water, soluble in hot aromatic hydrocarbons, practically insoluble in anhydrous ethanol, in hexane and in methanol.

It softens at temperatures beginning at 65 °C.

Relative density: 0.910 to 0.937.

IDENTIFICATION

If necessary, cut the samples of the material to be examined into pieces of maximum dimension on a side of not greater than 1 cm.

A. Infrared absorption spectrophotometry (*2.2.24*).

Preparation: to 0.25 g add 10 mL of *toluene R* and boil under a reflux condenser for about 15 min. Place a few drops of the solution on a sodium chloride disc and evaporate the solvent in an oven at 80 °C.

Absorption maxima: at 2920 cm^{-1}, 2850 cm^{-1}, 1465 cm^{-1}, 730 cm^{-1} and 720 cm^{-1}.

The spectrum obtained is identical to that obtained with the material selected for the type sample. If the material to be examined is in the form of sheets, the identification may be performed directly on a cut piece of suitable size.

B. Additives (see Tests).

TESTS

If necessary, cut the samples of the material to be examined into pieces of maximum dimension on a side of not greater than 1 cm.

Solution S1. Place 25 g in a borosilicate-glass flask with a ground-glass neck. Add 500 mL of *water for injections R* and heat under a reflux condenser for 5 h. Allow to cool and decant. Keep part of the solution for the test for appearance of solution. Filter the rest through a sintered glass filter (16) (*2.1.2*). *Use solution S1 within 4 h of preparation.*

Solution S2. Place 2.0 g in a conical borosilicate-glass flask with a ground-glass neck. Add 80 mL of *toluene R* and boil under a reflux condenser with constant stirring for 1 h 30 min. Allow to cool to 60 °C and add with continued stirring 120 mL of *methanol R*. Filter the solution through a sintered-glass filter (16) (*2.1.2*). Rinse the flask and the filter with 25 mL of a mixture of 40 mL of *toluene R* and 60 mL of *methanol R*, add the rinsings to the filtrate and dilute to 250 mL with the same mixture of solvents. Prepare a blank solution.

Solution S3. Place 100 g in a conical borosilicate-glass flask with a ground-glass neck. Add 250 mL of *0.1 M hydrochloric acid* and boil under a reflux condenser with constant stirring for 1 h. Allow to cool and decant the solution.

Appearance of solution. Solution S1 is clear (*2.2.1*) and colourless (*2.2.2, Method II*).

Acidity or alkalinity. To 100 mL of solution S1 add 0.15 mL of *BRP indicator solution R*. Not more than 1.5 mL of *0.01 M sodium hydroxide* is required to change the colour of the indicator to blue. To 100 mL of solution S1 add 0.2 mL of *methyl orange solution R*. Not more than 1.0 mL of *0.01 M hydrochloric acid* is required to reach the beginning of the colour change of the indicator from yellow to orange.

Absorbance (*2.2.25*): maximum 0.2, determined between wavelengths of 220 nm and 340 nm on solution S1.

Reducing substances. To 20 mL of solution S1 add 1 mL of *dilute sulfuric acid R* and 20 mL of *0.002 M potassium permanganate*. Boil under a reflux condenser for 3 min and cool immediately. Add l g of *potassium iodide R* and titrate immediately with *0.01 M sodium thiosulfate*, using 0.25 mL of *starch solution R* as indicator. Carry out a blank titration. The difference between the titration volumes is not more than 0.5 mL.

Substances soluble in hexane. Place 10 g in a 250 mL conical borosilicate-glass flask with a ground-glass neck. Add 100 mL of *hexane R* and boil under a reflux condenser for 4 h, stirring constantly. Cool in iced water and filter rapidly through a sintered-glass filter (16) (*2.1.2*) maintaining the solution at 0 °C (the filtration time must be less than 5 min; if necessary the filtration may be accelerated by applying pressure to the solution). Evaporate 20 mL of the filtrate in a tared glass dish on a water-bath. Dry the residue in an oven at 100-105 °C for 1 h. The mass of the residue obtained is within 10 per cent of the residue obtained with the type sample and does not exceed 5 per cent.

Additives. Thin-layer chromatography (*2.2.27*).

Test solution. Evaporate 50 mL of solution S2 to dryness *in vacuo* at 45 °C. Dissolve the evaporation residue with 5 mL of *methylene chloride R*. Prepare a blank solution from the blank solution corresponding to solution S2.

Reference solution. Dissolve 20 mg of *plastic additive 15 CRS* and 20 mg of *plastic additive 08 CRS* in *methylene chloride R* and dilute to 10 mL with the same solvent.

Plate: *TLC silica gel G plate R*.

Mobile phase A: *hexane R*.

Mobile phase B: *methanol R*, *methylene chloride R* (5:95 *V/V*).

Application: 10 µL.

Development A: over a path of 13 cm using mobile phase A.

Drying A: in air.

Development B: over a path of 10 cm using mobile phase B.

Drying B: in air.

Detection: spray with a 40 g/L solution of *phosphomolybdic acid R* in *ethanol (96 per cent) R* and heat at 120 °C until the spots appear in the chromatogram obtained with the reference solution.

System suitability: reference solution:

– the chromatogram shows 2 separated spots.

Limit: no spot appears in the chromatogram obtained with the test solution, except for a spot which may be at the solvent front from the first development and which corresponds to oligomers. Disregard any spots corresponding to those obtained in the chromatogram with the blank solution.

Extractable heavy metals (*2.4.8*): maximum 2.5 ppm.

Evaporate 50 mL of solution S3 to about 5 mL on a water-bath and dilute to 20 mL with *water R*. 12 mL of solution complies with test A. Prepare the reference solution using 2.5 mL of *lead standard solution (10 ppm Pb) R*.

Sulfated ash (*2.4.14*): maximum 0.02 per cent, determined on 5.0 g.

01/2008:30105
corrected 7.5

3.1.5. POLYETHYLENE WITH ADDITIVES FOR CONTAINERS FOR PARENTERAL PREPARATIONS AND FOR OPHTHALMIC PREPARATIONS

DEFINITION

Polyethylene with additives is obtained by the polymerisation of ethylene under pressure in the presence of a catalyst or by copolymerisation of ethylene with not more than 25 per cent of higher alkene homologues (C_3 to C_{10}).

PRODUCTION

A certain number of additives are added to the polymer in order to optimise their chemical, physical and mechanical properties in order to adapt them for the intended use. All these additives are chosen from the appended list which specifies for each product the maximum allowable content.

They may contain at most 3 antioxidants, 1 or several lubricants or antiblocking agents as well as titanium dioxide as an opacifying agent when the material must provide protection from light.

– butylhydroxytoluene (plastic additive 07): maximum 0.125 per cent;
– pentaerythrityl tetrakis[3-(3,5-di-*tert*-butyl-4-hydroxyphenyl)propionate] (plastic additive 09): maximum 0.3 per cent;
– 1,3,5-tris(3,5-di-*tert*-butyl-4-hydroxybenzyl)-*S*-triazine-2,4,6(1*H*,3*H*,5*H*)-trione (plastic additive 13): maximum 0.3 per cent;
– octadecyl 3-(3,5-di-*tert*-butyl-4-hydroxyphenyl)propionate, (plastic additive 11): maximum 0.3 per cent;

- ethylene bis[3,3-bis[3-(1,1-dimethylethyl)-4-hydroxyphenyl]butanoate] (plastic additive 08): maximum 0.3 per cent;
- dioctadecyl disulfide (plastic additive 15): maximum 0.3 per cent;
- 4,4′,4″-(2,4,6-trimethylbenzene-1,3,5-triyltrismethylene)-tris[2,6-bis(1,1-dimethylethyl)phenol] (plastic additive 10): maximum 0.3 per cent;
- 2,2′-bis(octadecyloxy)-5,5′-spirobi[1,3,2-dioxa-phosphinane] (plastic additive 14): maximum 0.3 per cent;
- didodecyl 3,3′-thiodipropionate (plastic additive 16): maximum 0.3 per cent;
- dioctadecyl 3,3′-thiodipropionate (plastic additive 17): maximum 0.3 per cent;
- tris [2,4-bis(1,1-dimethylethyl)phenyl] phosphite (plastic additive 12): maximum 0.3 per cent.

The total of antioxidant additives listed above does not exceed 0.3 per cent.

- hydrotalcite: maximum 0.5 per cent;
- alkanamides: maximum 0.5 per cent;
- alkenamides: maximum 0.5 per cent;
- sodium silico-aluminate: maximum 0.5 per cent;
- silica: maximum 0.5 per cent;
- sodium benzoate: maximum 0.5 per cent;
- fatty acid esters or salts: maximum 0.5 per cent;
- trisodium phosphate: maximum 0.5 per cent;
- liquid paraffin: maximum 0.5 per cent;
- zinc oxide: maximum 0.5 per cent;
- magnesium oxide: maximum 0.2 per cent;
- calcium stearate or zinc stearate or a mixture of both: maximum 0.5 per cent;
- titanium dioxide only for materials for containers for ophthalmic use: maximum 4 per cent.

The supplier of the material must be able to demonstrate that the qualitative and quantitative composition of the type sample is satisfactory for each production batch.

CHARACTERS

Appearance: powder, beads, granules or, after transformation, translucent sheets of varying thicknesses or containers.

Solubility: practically insoluble in water, soluble in hot aromatic hydrocarbons, practically insoluble in anhydrous ethanol, in hexane and in methanol.

It softens at temperatures between 70 °C and 140 °C.

Relative density: 0.890 to 0.965.

IDENTIFICATION

If necessary, cut the samples of the material to be examined into pieces of maximum dimension on a side of not greater than 1 cm.

A. Infrared absorption spectrophotometry (*2.2.24*).

Preparation: to 0.25 g add 10 mL of *toluene R* and boil under a reflux condenser for about 15 min. Place a few drops of the solution on a sodium chloride disc and evaporate the solvent in an oven at 80 °C.

Absorption maxima: at 2920 cm^{-1}, 2850 cm^{-1}, 1465 cm^{-1}, 1375 cm^{-1}, 1170 cm^{-1}, 730 cm^{-1} and 720 cm^{-1}.

The spectrum obtained is identical to the spectrum obtained with the material selected for the type sample. If the material to be examined is in the form of sheets, the identification may be performed directly on a cut piece of suitable size.

B. It complies with the supplementary tests corresponding to the additives present (see Tests).

C. In a platinum crucible, mix about 20 mg with 1 g of *potassium hydrogen sulfate R* and heat until completely melted. Allow to cool and add 20 mL of *dilute sulfuric acid R*. Heat gently. Filter the resulting solution. To the filtrate add 1 mL of *phosphoric acid R* and 1 mL of *strong hydrogen peroxide solution R*. If the substance is opacified with titanium dioxide, an orange-yellow colour develops.

TESTS

If necessary, cut the samples of the material to be examined into pieces of maximum dimension on a side of not greater than 1 cm.

Solution S1. Place 25 g in a borosilicate-glass flask with a ground-glass neck. Add 500 mL of *water for injections R* and boil under a reflux condenser for 5 h. Allow to cool and decant. Reserve a portion of the solution for the test for appearance of solution and filter the rest through a sintered-glass filter (16) (*2.1.2*). *Use within 4 h of preparation.*

Solution S2. Place 2.0 g in a conical borosilicate-glass flask with a ground-glass neck. Add 80 mL of *toluene R* and boil under a reflux condenser with constant stirring for 90 min. Allow to cool to 60 °C and add with continued stirring 120 mL of *methanol R*. Filter the solution through a sintered-glass filter (16) (*2.1.2*). Rinse the flask and the filter with 25 mL of a mixture of 40 mL of *toluene R* and 60 mL of *methanol R*, add the rinsings to the filtrate and dilute to 250.0 mL with the same mixture of solvents. Prepare a blank solution.

Solution S3. Place 100 g in a conical borosilicate-glass flask with a ground-glass neck. Add 250 mL of *0.1 M hydrochloric acid* and boil under a reflux condenser with constant stirring for 1 h. Allow to cool and decant the solution.

Appearance of solution. Solution S1 is clear (*2.2.1*) and colourless (*2.2.2, Method II*).

Acidity or alkalinity. To 100 mL of solution S1 add 0.15 mL of *BRP indicator solution R*. Not more than 1.5 mL of *0.01 M sodium hydroxide* is required to change the colour of the indicator to blue. To 100 mL of solution S1 add 0.2 mL of *methyl orange solution R*. Not more than 1.0 mL of *0.01 M hydrochloric acid* is required to reach the beginning of the colour change of the indicator from yellow to orange.

Absorbance (*2.2.25*): maximum 0.2, determined between wavelengths of 220 nm and 340 nm on solution S1.

Reducing substances. To 20 mL of solution S1 add 1 mL of *dilute sulfuric acid R* and 20 mL of *0.002 M potassium permanganate*. Boil under a reflux condenser for 3 min and cool immediately. Add 1 g of *potassium iodide R* and titrate immediately with *0.01 M sodium thiosulfate*, using 0.25 mL of *starch solution R* as indicator. Carry out a blank titration. The difference between the titration volumes is not more than 0.5 mL.

Substances soluble in hexane. Place 10 g in a 250 mL conical borosilicate-glass flask with a ground-glass neck. Add 100 mL of *hexane R* and boil under a reflux condenser for 4 h, stirring constantly. Cool in iced water and filter rapidly through a sintered-glass filter (16) (*2.1.2*) maintaining the solution at 0 °C (the filtration time must be less than 5 min; if necessary the filtration may be accelerated by applying pressure to the solution). Evaporate 20 mL of the filtrate in a tared borosilicate-glass dish on a water-bath. Dry the residue in an oven at 100-105 °C for 1 h. The mass of the residue obtained must be within 10 per cent of the residue obtained with the type sample and does not exceed 5 per cent.

Extractable aluminium: maximum 1 ppm.

Inductively coupled plasma-atomic emission spectrometry (*2.2.57*).

Test solution. Use solution S3.

Reference solutions. Prepare the reference solutions using *aluminium standard solution (200 ppm Al) R*, diluting with *0.1 M hydrochloric acid*.

Wavelength: use the emission of aluminium at 396.15 nm, the spectral background being taken as 396.25 nm.

Verify the absence of aluminium in the hydrochloric acid used.

Extractable chromium: maximum 0.05 ppm.

Inductively coupled plasma-atomic emission spectrometry (*2.2.57*).

Test solution. Use solution S3.

Reference solutions. Prepare the reference solutions using *chromium standard solution (100 ppm Cr) R*, diluting with a mixture of 2 volumes of *hydrochloric acid R* and 8 volumes of *water R*.

Wavelength: use the emission of chromium at 205.55 nm, the spectral background being taken as 205.50 nm.

Verify the absence of chromium in the hydrochloric acid used.

Extractable titanium: maximum 1 ppm.

Inductively coupled plasma-atomic emission spectrometry (*2.2.57*).

Test solution. Use solution S3.

Reference solutions. Prepare the reference solutions using *titanium standard solution (100 ppm Ti) R*, diluting with *0.1 M hydrochloric acid*.

Wavelength: use the emission of titanium at 336.12 nm, the spectral background being taken as 336.16 nm.

Verify the absence of titanium in the hydrochloric acid used.

Extractable vanadium: maximum 0.1 ppm.

Inductively coupled plasma-atomic emission spectrometry (*2.2.57*).

Test solution. Use solution S3.

Reference solutions. Prepare the reference solutions using *vanadium standard solution (1 g/L V) R*, diluting with a mixture of 2 volumes of *hydrochloric acid R* and 8 volumes of *water R*.

Wavelength: use the emission of vanadium at 292.40 nm, the spectral background being taken as 292.35 nm.

Verify the absence of vanadium in the hydrochloric acid used.

Extractable zinc: maximum 1 ppm.

Atomic absorption spectrometry (*2.2.23, Method I*).

Test solution. Use solution S3.

Reference solutions. Prepare the reference solutions using *zinc standard solution (10 ppm Zn) R*, diluting with *0.1 M hydrochloric acid*.

Source: zinc hollow-cathode lamp.

Wavelength: 213.9 nm.

Atomisation device: air-acetylene flame.

Extractable zirconium: maximum 0.1 ppm.

Inductively coupled plasma-atomic emission spectrometry (*2.2.57*).

Test solution. Use solution S3.

Reference solutions. Prepare the reference solutions using *zirconium standard solution (1 g/L Zr) R*, diluting with a mixture of 2 volumes of *hydrochloric acid R* and 8 volumes of *water R*.

Wavelength: use the emission of zirconium at 343.82 nm, the spectral background being taken as 343.92 nm.

Verify the absence of zirconium in the hydrochloric acid used.

Extractable heavy metals (*2.4.8*): maximum 2.5 ppm.

Evaporate 50 mL of solution S3 to about 5 mL on a water-bath and dilute to 20.0 mL with *water R*. 12 mL of the solution complies with test A. Prepare the reference solution using 2.5 mL of *lead standard solution (10 ppm Pb) R*.

Sulfated ash (*2.4.14*): maximum 1.0 per cent, determined on 5.0 g.

This limit does not apply to material opacified with titanium dioxide.

SUPPLEMENTARY TESTS

These tests are to be carried out, in whole or in part, only if required by the stated composition of the material.

Phenolic antioxidants. Liquid chromatography (*2.2.29*).

Solvent mixture: *acetonitrile R*, *tetrahydrofuran R* (50:50 *V/V*).

Test solution S21. Evaporate 50 mL of solution S2 to dryness *in vacuo* at 45 °C. Dissolve the residue with 5.0 mL of the solvent mixture. Prepare a blank solution from the blank solution corresponding to solution S2.

Test solution S22. Evaporate 50 mL of solution S2 to dryness *in vacuo* at 45 °C. Dissolve the residue with 5.0 mL of *methylene chloride R*. Prepare a blank solution from the blank solution corresponding to solution S2.

Of the following reference solutions, only prepare those that are necessary for the analysis of the phenolic antioxidants stated in the composition of the substance to be examined.

Reference solution (a). Dissolve 25.0 mg of *butylhydroxytoluene CRS* (plastic additive 07) and 60.0 mg of *plastic additive 08 CRS* in 10.0 mL of the solvent mixture. Dilute 2.0 mL of this solution to 50.0 mL with the solvent mixture.

Reference solution (b). Dissolve 60.0 mg of *plastic additive 09 CRS* and 60.0 mg of *plastic additive 10 CRS* in 10.0 mL of the solvent mixture. Dilute 2.0 mL of this solution to 50.0 mL with the solvent mixture.

Reference solution (c). Dissolve 60.0 mg of *plastic additive 11 CRS* and 60.0 mg of *plastic additive 12 CRS* in 10.0 mL of *methylene chloride R*. Dilute 2.0 mL of this solution to 50.0 mL with *methylene chloride R*.

Reference solution (d). Dissolve 25.0 mg of *butylhydroxytoluene CRS* (plastic additive 07) in 10.0 mL of the solvent mixture. Dilute 2.0 mL of this solution to 50.0 mL with the solvent mixture.

Reference solution (e). Dissolve 60.0 mg of *plastic additive 08 CRS* in 10.0 mL of the solvent mixture. Dilute 2.0 mL of this solution to 50.0 mL with the solvent mixture.

Reference solution (f). Dissolve 60.0 mg of *plastic additive 13 CRS* in 10.0 mL of the solvent mixture. Dilute 2.0 mL of this solution to 50.0 mL with the solvent mixture.

Reference solution (g). Dissolve 60.0 mg of *plastic additive 09 CRS* in 10.0 mL of the solvent mixture. Dilute 2.0 mL of this solution to 50.0 mL with the solvent mixture.

Reference solution (h). Dissolve 60.0 mg of *plastic additive 10 CRS* in 10.0 mL of the solvent mixture. Dilute 2.0 mL of this solution to 50.0 mL with the solvent mixture.

Reference solution (i). Dissolve 60.0 mg of *plastic additive 11 CRS* in 10.0 mL of *methylene chloride R*. Dilute 2.0 mL of this solution to 50.0 mL with *methylene chloride R*.

Reference solution (j). Dissolve 60.0 mg of *plastic additive 12 CRS* in 10.0 mL of *methylene chloride R*. Dilute 2.0 mL of this solution to 50.0 mL with *methylene chloride R*.

A. If the substance to be examined contains plastic additive 07 and/or plastic additive 08, proceed as follows.

Column:

- *size*: *l* = 0.25 m, Ø = 4.6 mm;
- *stationary phase*: *octadecylsilyl silica gel for chromatography R* (5 µm).

Mobile phase: *water R*, *acetonitrile R* (30:70 *V/V*).

Flow rate: 2 mL/min.

Detection: spectrophotometer at 280 nm.

Injection: 20 µL of test solution S21, of the corresponding blank solution, of reference solution (a), and either reference solution (d) or (e), or reference solutions (d) and (e).

Run time: 30 min.

System suitability:

- *resolution*: minimum 8.0 between the peaks due to plastic additive 07 and plastic additive 08 in the chromatogram obtained with reference solution (a);
- the chromatogram corresponding to test solution S21 only show peaks due to antioxidants stated in the composition and minor peaks that also appear in the chromatogram corresponding to the blank solution.

Limit: the areas of the peaks of test solution S21 are less than the areas of the corresponding peaks in the chromatograms obtained with reference solutions (d) and/or (e).

B. If the substance to be examined contains one or more of the following antioxidants:

- plastic additive 09;
- plastic additive 10;
- plastic additive 11;
- plastic additive 12;
- plastic additive 13;

proceed as described above with the following modifications.

Mobile phase: *water R*, *tetrahydrofuran R*, *acetonitrile R* (10:30:60 *V/V/V*).

Flow rate: 1.5 mL/min.

Injection: 20 µL of test solution S21, of the corresponding blank solution, of reference solution (b) and reference solutions of the antioxidants on the list above that are stated in the composition.

System suitability:

- *resolution*: minimum 2.0 between the peaks due to plastic additive 09 and plastic additive 10 in the chromatogram obtained with reference solution (b);
- the chromatogram corresponding to test solution S21 only show peaks due to antioxidants stated in the composition and minor peaks that also appear in the chromatogram corresponding to the blank solution.

Limit: the areas of the peaks of test solution S21 are less than the areas of the corresponding peaks in the chromatograms obtained with reference solutions of the antioxidants on the list above that are stated in the composition.

C. If the substance to be examined contains plastic additive 11 and/or plastic additive 12, carry out the test as described for plastic additive 07 and/or plastic additive 08 with the following modifications.

Mobile phase: *water R*, *2-propanol R*, *methanol R* (5:45:50 *V/V/V*).

Flow rate: 1.5 mL/min.

Injection: 20 µL of test solution S22, of the corresponding blank solution, of reference solution (c), and either of reference solution (i) or (j), or reference solutions (i) and (j).

System suitability:

- *resolution*: minimum 2.0 between the peaks due to plastic additive 11 and plastic additive 12 in the chromatogram obtained with reference solution (c);
- the chromatogram corresponding to test solution S22 only show peaks due to antioxidants stated in the composition and minor peaks that also appear in the chromatogram corresponding to the blank solution.

Limit: the areas of the peaks of test solution S22 are less than the areas of the corresponding peaks in the chromatograms obtained with reference solutions (i) and/or (j).

Non-phenolic antioxidants. Thin-layer chromatography (*2.2.27*).

Test solution S23. Evaporate 100 mL of solution S2 to dryness *in vacuo* at 45 °C. Dissolve the residue in 2 mL of *acidified methylene chloride R*.

Reference solution (k). Dissolve 60 mg of *plastic additive 14 CRS* in *methylene chloride R* and dilute to 10 mL with the same solvent. Dilute 2 mL of this solution to 10 mL with *acidified methylene chloride R*.

Reference solution (l). Dissolve 60 mg of *plastic additive 15 CRS* in *methylene chloride R* and dilute to 10 mL with the same solvent. Dilute 2 mL of this solution to 10 mL with *acidified methylene chloride R*.

Reference solution (m). Dissolve 60 mg of *plastic additive 16 CRS* in *methylene chloride R* and dilute to 10 mL with the same solvent. Dilute 2 mL of this solution to 10 mL with *acidified methylene chloride R*.

Reference solution (n). Dissolve 60 mg of *plastic additive 17 CRS* in *methylene chloride R* and dilute to 10 mL with the same solvent. Dilute 2 mL of this solution to 10 mL with *acidified methylene chloride R*.

Reference solution (o). Dissolve 60 mg of *plastic additive 16 CRS* and 60 mg of *plastic additive 17 CRS* in *methylene chloride R* and dilute to 10 mL with the same solvent. Dilute 2 mL of this solution to 10 mL with *acidified methylene chloride R*.

Plate: *TLC silica gel GF_{254} plate R*.

Mobile phase A: *hexane R*.

Mobile phase B: *methylene chloride R*.

Application: 20 µL of test solution S23, of reference solution (o) and of the reference solutions corresponding to all the phenolic and non-phenolic antioxidants mentioned in the type composition of the material to be examined.

Development A: over a path of 18 cm with mobile phase A.

Drying A: in air.

Development B: over a path of 17 cm with mobile phase B.

Drying B: in air.

Detection: examine in ultraviolet light at 254 nm, spray with *alcoholic iodine solution R* and examine in ultraviolet light at 254 nm after 10-15 min.

System suitability: reference solution (o):

- the chromatogram shows 2 clearly separated spots.

Limits: any spots in the chromatogram obtained with test solution S23 are not more intense than the spots in the same locations in the chromatograms obtained with the reference solutions.

Amides and stearates. Thin-layer chromatography (*2.2.27*).

Test solution. Use test solution S23 described in the test for non-phenolic antioxidants.

Reference solution (p). Dissolve 20 mg of *stearic acid CRS* (plastic additive 19) in *methylene chloride R* and dilute to 10 mL with the same solvent.

Reference solution (q). Dissolve 40 mg of *plastic additive 20 CRS* in *methylene chloride R* and dilute to 20 mL with the same solvent.

Reference solution (r). Dissolve 40 mg of *plastic additive 21 CRS* in *methylene chloride R* and dilute to 20 mL with the same solvent.

Plates: *TLC silica gel GF_{254} plate R* (2 plates).

A. *Mobile phase*: *anhydrous ethanol R*, *trimethylpentane R* (25:75 *V/V*).

Application: 10 µL of test solution S23 and reference solution (p).

Development: over a path of 10 cm.

Drying: in air.

Detection: spray with a 2 g/L solution of *dichlorophenolindophenol, sodium salt R* in *anhydrous ethanol R* and heat in an oven at 120 °C for a few minutes to intensify the spots.

Limit: any spot corresponding to plastic additive 19 in the chromatogram obtained with test solution S23 is identical in position (R_F = about 0.5) but not more intense than the spot in the same location in the chromatogram obtained with reference solution (p).

B. *Mobile phase A*: *hexane R*.

Mobile phase B: *methanol R*, *methylene chloride R* (5:95 *V/V*).

Application: 10 µL of test solution S23 and reference solutions (q) and (r).

Development A: over a path of 13 cm with mobile phase A.

Drying A: in air.

Development B: over a path of 10 cm with mobile phase B.

Drying B: in air.

Detection: spray with a 40 g/L solution of *phosphomolybdic acid R* in *anhydrous ethanol R* and heat in an oven at 120 °C until spots appear.

Limit: any spots corresponding to plastic additive 20 or plastic additive 21 in the chromatogram obtained with the test solution S23 are identical in position (R_F = about 0.2) but not more intense than the corresponding spots in the chromatograms obtained with reference solutions (q) and (r).

01/2008:30106
corrected 7.5

3.1.6. POLYPROPYLENE FOR CONTAINERS AND CLOSURES FOR PARENTERAL PREPARATIONS AND OPHTHALMIC PREPARATIONS

DEFINITION

Polypropylene consists of the homopolymer of propylene or of a copolymer of propylene with not more than 25 per cent of ethylene or of a mixture (alloy) of polypropylene with not more than 25 per cent of polyethylene. It may contain additives.

PRODUCTION

A certain number of additives are added to the polymer in order to optimise their chemical, physical and mechanical properties in order to adapt them for the intended use. All these additives are chosen from the appended list which specifies for each product the maximum allowable content.

They may contain at most 3 antioxidants, one or several lubricants or antiblocking agents as well as titanium dioxide as opacifying agent when the material must provide protection from light.

- butylhydroxytoluene (plastic additive 07): maximum 0.125 per cent;
- pentaerythrityl tetrakis[3-(3,5-di-*tert*-butyl-4-hydroxyphenyl)propionate] (plastic additive 09): maximum 0.3 per cent;
- 1,3,5-tris(3,5-di-*tert*-butyl-4-hydroxybenzyl)-*s*-triazine-2,4,6(1*H*,3*H*,5*H*)-trione (plastic additive 13): maximum 0.3 per cent;
- octadecyl 3-(3,5-di-*tert*-butyl-4-hydroxyphenyl)propionate, (plastic additive 11): maximum 0.3 per cent;
- ethylene bis[3,3-bis[3-(1,1-dimethylethyl)-4-hydroxyphenyl]butanoate] (plastic additive 08): maximum 0.3 per cent;
- dioctadecyl disulfide (plastic additive 15): maximum 0.3 per cent;
- 2,2′,2″,6,6′,6″-hexa-*tert*-butyl-4,4′,4″-[(2,4,6-trimethyl-1,3,5-benzenetriyl)trismethylene]triphenol (plastic additive 10): maximum 0.3 per cent;
- 2,2′-bis(octadecyloxy)-5,5′-spirobi[1,3,2-dioxa-phosphinane] (plastic additive 14): maximum 0.3 per cent;
- didodecyl 3,3′-thiodipropionate (plastic additive 16): maximum 0.3 per cent;
- dioctadecyl 3,3′-thiodipropionate (plastic additive 17): maximum 0.3 per cent;
- tris(2,4-di-*tert*-butylphenyl) phosphite (plastic additive 12): maximum 0.3 per cent;

The total of antioxidant additives listed above does not exceed 0.3 per cent.

- hydrotalcite: maximum 0.5 per cent;
- alkanamides: maximum 0.5 per cent;
- alkenamides: maximum 0.5 per cent;
- sodium silico-aluminate: maximum 0.5 per cent;
- silica: maximum 0.5 per cent;
- sodium benzoate: maximum 0.5 per cent;
- fatty acid esters or salts: maximum 0.5 per cent;
- trisodium phosphate: maximum 0.5 per cent;
- liquid paraffin: maximum 0.5 per cent;
- zinc oxide: maximum 0.5 per cent;
- talc: maximum 0.5 per cent;
- magnesium oxide: maximum 0.2 per cent;
- calcium stearate or zinc stearate or a mixture of both: maximum 0.5 per cent;
- titanium dioxide, only for materials for containers for ophthalmic use: maximum 4 per cent.

The supplier of the material must be able to demonstrate that the qualitative and quantitative composition of the type sample is satisfactory for each production batch.

CHARACTERS

Appearance: powder, beads, granules or, after transformation, translucent sheets of varying thicknesses or containers.

Solubility: practically insoluble in water, soluble in hot aromatic hydrocarbons, practically insoluble in anhydrous ethanol, in hexane and in methanol.

It softens at temperatures beginning at about 120 °C.

IDENTIFICATION

If necessary, cut the material to be examined into pieces of maximum dimension on a side of not greater than 1 cm.

A. Infrared absorption spectrophotometry (*2.2.24*).

Preparation: to 0.25 g add 10 mL of *toluene R* and boil under a reflux condenser for about 15 min. Place a few drops of the hot solution on a sodium chloride disc and evaporate the solvent in an oven at 80 °C.

Absorption maxima: at 1375 cm^{-1}, 1170 cm^{-1}, 995 cm^{-1} and 970 cm^{-1}.

The spectrum obtained is identical to the spectrum obtained with the material selected for the type sample. If the material to be examined is in the form of sheets, the identification may be performed directly on a cut piece of suitable size.

B. It complies with the supplementary tests corresponding to the additives present (see Tests).

C. In a platinum crucible, mix about 20 mg with 1 g of *potassium hydrogen sulfate R* and heat until completely melted. Allow to cool and add 20 mL of *dilute sulfuric acid R*. Heat gently. Filter the resulting solution. To the filtrate add 1 mL of *phosphoric acid R* and 1 mL of *strong hydrogen peroxide solution R*. If the substance is opacified with titanium dioxide, an orange-yellow colour develops.

TESTS

If necessary, cut the material to be examined into pieces of maximum dimension on a side of not greater than 1 cm.

Solution S1. *Use solution S1 within 4 h of preparation*. Place 25 g in a borosilicate-glass flask with a ground-glass neck. Add 500 mL of *water for injections R* and boil under a reflux condenser for 5 h. Allow to cool and decant. Reserve a portion of the solution for the test for appearance of solution and filter the rest through a sintered-glass filter (16) (*2.1.2*).

Solution S2. Place 2.0 g in a conical borosilicate-glass flask with a ground-glass neck. Add 80 mL of *toluene R* and boil under a reflux condenser with constant stirring for 1 h 30 min. Allow to cool to 60 °C and add with continued stirring 120 mL of *methanol R*. Filter the solution through a sintered-glass filter (16) (*2.1.2*). Rinse the flask and the filter with 25 mL of a mixture of 40 mL of *toluene R* and 60 mL of *methanol R*, add the rinsings to the filtrate and dilute to 250.0 mL with the same mixture of solvents. Prepare a blank solution.

Solution S3. Place 100 g in a conical borosilicate-glass flask with a ground-glass neck. Add 250 mL of *0.1 M hydrochloric acid* and boil under a reflux condenser with constant stirring for 1 h. Allow to cool and decant the solution.

Appearance of solution. Solution S1 is not more opalescent than reference suspension II (*2.2.1*) and is colourless (*2.2.2, Method II*).

Acidity or alkalinity. To 100 mL of solution S1 add 0.15 mL of *BRP indicator solution R*. Not more than 1.5 mL of *0.01 M sodium hydroxide* is required to change the colour of the indicator to blue. To 100 mL of solution S1 add 0.2 mL of *methyl orange solution R*. Not more than 1.0 mL of *0.01 M hydrochloric acid* is required to reach the beginning of the colour change of the indicator from yellow to orange.

Absorbance (*2.2.25*): maximum 0.2, determined between wavelengths of 220 nm to 340 nm on solution S1.

Reducing substances. To 20 mL of solution S1 add 1 mL of *dilute sulfuric acid R* and 20 mL of *0.002 M potassium permanganate*. Boil under a reflux condenser for 3 min and cool immediately. Add 1 g of *potassium iodide R* and titrate immediately with *0.01 M sodium thiosulfate*, using 0.25 mL of *starch solution R* as indicator. Carry out a blank titration. The difference between the titration volumes is not more than 0.5 mL.

Substances soluble in hexane. Place 10 g in a 250 mL conical borosilicate-glass flask with a ground-glass neck. Add 100 mL of *hexane R* and boil under a reflux condenser for 4 h, stirring constantly. Cool in iced water and filter rapidly through a sintered-glass filter (16) (*2.1.2*) maintaining the solution at 0 °C (the filtration time must be less than 5 min; if necessary the filtration may be accelerated by applying pressure to the solution). Evaporate 20 mL of the filtrate in a tared glass dish on a water-bath. Dry the residue in an oven at 100-105 °C for 1 h. The mass of the residue obtained must be within 10 per cent of the residue obtained with the type sample and does not exceed 5 per cent.

Extractable aluminium: maximum 1 ppm.

Inductively coupled plasma-atomic emission spectrometry (*2.2.57*).

Test solution. Use solution S3.

Reference solutions. Prepare the reference solutions using *aluminium standard solution (200 ppm Al) R*, diluting with *0.1 M hydrochloric acid*.

Wavelength: use the emission of aluminium at 396.15 nm, the spectral background being taken as 396.25 nm.

Verify the absence of aluminium in the hydrochloric acid used.

Extractable chromium: maximum 0.05 ppm.

Inductively coupled plasma-atomic emission spectrometry (*2.2.57*).

Test solution. Use solution S3.

Reference solutions. Prepare the reference solutions using *chromium standard solution (100 ppm Cr) R*, diluting with a mixture of 2 volumes of *hydrochloric acid R* and 8 volumes of *water R*.

Wavelength: use the emission of chromium at 205.55 nm, the spectral background being taken as 205.50 nm.

Verify the absence of chromium in the hydrochloric acid used.

Extractable titanium: maximum 1 ppm.

Inductively coupled plasma-atomic emission spectrometry (*2.2.57*).

Test solution. Use solution S3.

Reference solutions. Prepare the reference solutions using *titanium standard solution (100 ppm Ti) R*, diluting with *0.1 M hydrochloric acid*.

Wavelength: use the emission of titanium at 336.12 nm, the spectral background being taken as 336.16 nm.

Verify the absence of titanium in the hydrochloric acid used.

Extractable vanadium: maximum 0.1 ppm.

Inductively coupled plasma-atomic emission spectrometry (*2.2.57*).

Test solution. Use solution S3.

Reference solutions. Prepare the reference solutions using *vanadium standard solution (1 g/L V) R*, diluting with a mixture of 2 volumes of *hydrochloric acid R* and 8 volumes of *water R*.

Wavelength: use the emission of vanadium at 292.40 nm, the spectral background being taken as 292.35 nm.

Verify the absence of vanadium in the hydrochloric acid used.

Extractable zinc: maximum 1 ppm.

Atomic absorption spectrometry (*2.2.23, Method I*).

Test solution. Use solution S3.

Reference solutions. Prepare the reference solutions using *zinc standard solution (10 ppm Zn) R*, diluting with *0.1 M hydrochloric acid*.

Source: zinc hollow-cathode lamp.

Wavelength: 213.9 nm.

Atomisation device: air-acetylene flame.

Verify the absence of zinc in the hydrochloric acid used.

Extractable heavy metals (*2.4.8*): maximum 2.5 ppm.

Concentrate 50 mL of solution S3 to about 5 mL on a water-bath and dilute to 20.0 mL with *water R*. 12 mL of the solution complies with test A. Prepare the reference solution using 2.5 mL of *lead standard solution (10 ppm Pb) R*.

Sulfated ash (*2.4.14*): maximum 1.0 per cent, determined on 5.0 g. This limit does not apply to material that has been opacified with titanium dioxide.

SUPPLEMENTARY TESTS

These tests are to be carried out, in whole or in part, only if required by the stated composition of the material.

Phenolic antioxidants. Liquid chromatography (*2.2.29*).

Solvent mixture: *acetonitrile R*, *tetrahydrofuran R* (50:50 *V/V*).

Test solution S21. Evaporate 50 mL of solution S2 to dryness *in vacuo* at 45 °C. Dissolve the residue with 5.0 mL of the solvent mixture. Prepare a blank solution from the blank solution corresponding to solution S2.

Test solution S22. Evaporate 50 mL of solution S2 to dryness *in vacuo* at 45 °C. Dissolve the residue with 5.0 mL of *methylene chloride R*. Prepare a blank solution from the blank solution corresponding to solution S2.

Of the following reference solutions, only prepare those that are necessary for the analysis of the phenolic antioxidants stated in the composition of the substance to be examined.

Reference solution (a). Dissolve 25.0 mg of *butylhydroxytoluene CRS* (plastic additive 07) and 60.0 mg of *plastic additive 08 CRS* in 10.0 mL of the solvent mixture. Dilute 2.0 mL of this solution to 50.0 mL with the solvent mixture.

Reference solution (b). Dissolve 60.0 mg of *plastic additive 09 CRS* and 60.0 mg of *plastic additive 10 CRS* in 10.0 mL of the solvent mixture. Dilute 2.0 mL of this solution to 50.0 mL with the solvent mixture.

Reference solution (c). Dissolve 60.0 mg of *plastic additive 11 CRS* and 60.0 mg of *plastic additive 12 CRS* in 10 mL of *methylene chloride R*. Dilute 2.0 mL of this solution to 50.0 mL with *methylene chloride R*.

Reference solution (d). Dissolve 25.0 mg of *butylhydroxytoluene CRS* (plastic additive 07) in 10.0 mL of the solvent mixture. Dilute 2.0 mL of this solution to 50.0 mL with the solvent mixture.

Reference solution (e). Dissolve 60.0 mg of *plastic additive 08 CRS* in 10.0 mL of the solvent mixture. Dilute 2.0 mL of this solution to 50.0 mL with the solvent mixture.

Reference solution (f). Dissolve 60.0 mg of *plastic additive 13 CRS* in 10.0 mL of the solvent mixture. Dilute 2.0 mL of this solution to 50.0 mL with the solvent mixture.

Reference solution (g). Dissolve 60.0 mg of *plastic additive 09 CRS* in 10.0 mL of the solvent mixture. Dilute 2.0 mL of this solution to 50.0 mL with the solvent mixture.

Reference solution (h). Dissolve 60.0 mg of *plastic additive 10 CRS* in 10.0 mL of the solvent mixture. Dilute 2.0 mL of this solution to 50.0 mL with the solvent mixture.

Reference solution (i). Dissolve 60.0 mg of *plastic additive 11 CRS* in 10.0 mL of *methylene chloride R*. Dilute 2.0 mL of this solution to 50.0 mL with *methylene chloride R*.

Reference solution (j). Dissolve 60.0 mg of *plastic additive 12 CRS* in 10.0 mL of *methylene chloride R*. Dilute 2.0 mL of this solution to 50.0 mL with *methylene chloride R*.

A. If the substance to be examined contains plastic additive 07 and/or plastic additive 08, carry out the test as follows.

Column:

- *size*: *l* = 0.25 m, Ø = 4.6 mm;
- *stationary phase*: *octadecylsilyl silica gel for chromatography R* (5 µm).

Mobile phase: *water R*, *acetonitrile R* (30:70 *V/V*).

Flow rate: 2 mL/min.

Detection: spectrophotometer at 280 nm.

Injection: 20 µL of test solution S21, corresponding blank solution and reference solution (a), and either reference solution (d) or (e), or reference solutions (d) and (e).

Run time: 30 min.

System suitability:

- *resolution*: minimum 8.0 between the peaks due to plastic additive 07 and plastic additive 08 in the chromatogram obtained with reference solution (a);
- the chromatogram corresponding to test solution S21 only show peaks due to antioxidants stated in the composition and minor peaks that also appear in the chromatogram corresponding to the blank solution.

Limit: the areas of the peaks in the chromatogram obtained with test solution S21 are less than the areas of the corresponding peaks in the chromatograms obtained with reference solutions (d) and/or (e).

B. If the substance to be examined contains one or more of the following antioxidants:

- plastic additive 09;
- plastic additive 10;
- plastic additive 11;
- plastic additive 12;
- plastic additive 13;

carry out the test as described above with the following modifications.

Mobile phase: *water R*, *tetrahydrofuran R*, *acetonitrile R* (10:30:60 *V/V/V*).

Flow rate: 1.5 mL/min.

Injection: 20 µL of test solution S21, corresponding blank solution, reference solution (b) and reference solutions of the antioxidants on the list above that are stated in the composition.

System suitability:

- *resolution*: minimum 2.0 between the peaks due to plastic additive 09 and plastic additive 10 in the chromatogram obtained with reference solution (b);
- the chromatogram corresponding to test solution S21 only show peaks due to antioxidants stated in the composition and minor peaks that also appear in the chromatogram corresponding to the blank solution.

Limit: the areas of the peaks in the chromatogram obtained with test solution S21 are less than the areas of the corresponding peaks in the chromatograms obtained with reference solutions of the antioxidants on the list above that are stated in the composition.

C. If the substance to be examined contains plastic additive 11 and/or plastic additive 12, carry out the test as described for plastic additive 07 and/or plastic additive 08 with the following modifications.

Mobile phase: *water R*, *2-propanol R*, *methanol R* (5:45:50 *V/V/V*).

Flow rate: 1.5 mL/min.

Injection: 20 µL of test solution S22, corresponding blank solution, reference solution (c), and either reference solution (i) or (j), or reference solutions (i) and (j).

System suitability:

- *resolution*: minimum 2.0 between the peaks due to plastic additive 11 and plastic additive 12 in the chromatogram obtained with reference solution (c);
- the chromatogram corresponding to test solution S22 only show peaks due to antioxidants stated in the composition and minor peaks that also appear in the chromatogram corresponding to the blank solution.

Limit: the areas of the peaks in the chromatogram obtained with test solution S22 are less than the areas of the corresponding peaks in the chromatograms obtained with reference solutions (i) and/or (j).

Non-phenolic antioxidants. Thin-layer chromatography (*2.2.27*).

Test solution S23. Evaporate 100 mL of solution S2 to dryness *in vacuo* at 45 °C. Dissolve the residue with 2 mL of *acidified methylene chloride R*.

Reference solution (k). Dissolve 60 mg of *plastic additive 14 CRS* in *methylene chloride R* and dilute to 10 mL with the same solvent. Dilute 2 mL of the solution to 10 mL with *acidified methylene chloride R*.

Reference solution (l). Dissolve 60 mg of *plastic additive 15 CRS* in *methylene chloride R* and dilute to 10 mL with the same solvent. Dilute 2 mL of the solution to 10 mL with *acidified methylene chloride R*.

Reference solution (m). Dissolve 60 mg of *plastic additive 16 CRS* in *methylene chloride R* and dilute to 10 mL with the same solvent. Dilute 2 mL of the solution to 10 mL with *acidified methylene chloride R*.

Reference solution (n). Dissolve 60 mg of *plastic additive 17 CRS* in *methylene chloride R* and dilute to 10 mL with the same solvent. Dilute 2 mL of the solution to 10 mL with *acidified methylene chloride R*.

Reference solution (o). Dissolve 60 mg of *plastic additive 16 CRS* and 60 mg of *plastic additive 17 CRS* in *methylene chloride R* and dilute to 10 mL with the same solvent. Dilute 2 mL of the solution to 10 mL with *acidified methylene chloride R*.

Plate: *TLC silica gel GF_{254} plate R*.

Mobile phase A: *hexane R*.

Mobile phase B: *methylene chloride R*.

Application: 20 µL of test solution S23, reference solution (o) and reference solutions corresponding to all the phenolic and non-phenolic antioxidants mentioned in the type composition of the material to be examined.

Development A: over a path of 18 cm with mobile phase A.

Drying A: in air.

Development B: over a path of 17 cm with mobile phase B.

Drying B: in air.

Detection: examine in ultraviolet light at 254 nm; spray with *alcoholic iodine solution R* and examine in ultraviolet light at 254 nm after 10-15 min.

System suitability: reference solution (o):

– the chromatogram shows 2 clearly separated spots.

Limits: any spots in the chromatogram obtained with test solution S23 are not more intense than the spots in the same positions in the chromatograms obtained with the reference solutions.

Amides and stearates. Thin-layer chromatography (*2.2.27*).

Test solution. Use solution S23 described in the test for non-phenolic antioxidants.

Reference solution (p). Dissolve 20 mg of *stearic acid CRS* (plastic additive 19) in *methylene chloride R* and dilute to 10 mL with the same solvent.

Reference solution (q). Dissolve 40 mg of *plastic additive 20 CRS* in *methylene chloride R* and dilute to 20 mL with the same solvent.

Reference solution (r). Dissolve 40 mg of *plastic additive 21 CRS* in *methylene chloride R* and dilute to 20 mL with the same solvent.

Plate: *TLC silica gel GF_{254} plate R* (2 plates).

A. *Mobile phase*: *anhydrous ethanol R*, *trimethylpentane R* (25:75 *V/V*).

Application: 10 µL of solution S23 and reference solution (p).

Development: over a path of 10 cm.

Drying: in air.

Detection: spray with a 2 g/L solution of *dichlorophenolindophenol, sodium salt R* in *anhydrous ethanol R* and heat in an oven at 120 °C for a few minutes to intensify the spots.

Limit: any spot corresponding to plastic additive 19 in the chromatogram obtained with test solution S23 is identical in position (R_F about 0.5) but not more intense than the spot in the same position in the chromatogram obtained with reference solution (p).

B. *Mobile phase A*: *hexane R*.

Mobile phase B: *methanol R*, *methylene chloride R* (5:95 *V/V*).

Application: 10 µL of solution S23 and reference solutions (q) and (r).

Development A: over a path of 13 cm with mobile phase A.

Drying A: in air.

Development B: over a path of 10 cm with mobile phase B.

Drying B: in air.

Detection: spray with a 40 g/L solution of *phosphomolybdic acid R* in *anhydrous ethanol R*; heat in an oven at 120 °C until spots appear.

Limit: any spots corresponding to plastic additive 20 or plastic additive 21 in the chromatogram obtained with test solution S23 are identical in position (R_F about 0.2) but not more intense than the corresponding spots in the chromatograms obtained with reference solutions (q) and (r).

01/2008:30107

3.1.7. POLY(ETHYLENE - VINYL ACETATE) FOR CONTAINERS AND TUBING FOR TOTAL PARENTERAL NUTRITION PREPARATIONS

3. Materials/ Containers

DEFINITION

Poly(ethylene - vinyl acetate), complying with the following requirements, is suitable for the manufacture of containers and tubing for total parenteral nutrition preparations. It is obtained by copolymerisation of mixtures of ethylene and vinyl acetate.

Content of vinyl acetate:

– *material used for containers*: a defined quantity of not more than 25 per cent;

– *material used for tubing*: a defined quantity of not more than 30 per cent.

PRODUCTION

A certain number of additives are added to the polymer in order to optimise their chemical, physical and mechanical properties in order to adapt them for the intended use. All these additives are chosen from the appended list which specifies for each product the maximum allowable content.

Poly(ethylene - vinyl acetate) may contain not more than 3 of the following antioxidants:

– butylhydroxytoluene (plastic additive 07): maximum 0.125 per cent;

– pentaerythrityl tetrakis[3-(3,5-di-*tert*-butyl-4-hydroxyphenyl)propionate] (plastic additive 09): maximum 0.2 per cent;

– octadecyl 3-(3,5-di-*tert*-butyl-4-hydroxyphenyl)propionate (plastic additive 11): maximum 0.2 per cent;

– tris(2,4-di-*tert*-butylphenyl) phosphite (plastic additive 12): maximum 0.2 per cent;

– 2,2′,2″,6,6′,6″-hexa-*tert*-butyl-4,4′,4″-[(2,4,6-trimethyl-1,3,5-benzenetriyl)trismethylene]triphenol (plastic additive 10): maximum 0.2 per cent.

It may also contain:

– oleamide (plastic additive 20): maximum 0.5 per cent;

– erucamide (plastic additive 21): maximum 0.5 per cent;

– calcium stearate or zinc stearate or a mixture of both: maximum 0.5 per cent;

– calcium carbonate or potassium hydroxide: maximum 0.5 per cent;

– colloidal silica: maximum 0.2 per cent.

The supplier of the material must be able to demonstrate that the qualitative and quantitative composition of the type sample is satisfactory for each production batch.

CHARACTERS

Appearance: beads, granules or, after transformation, translucent sheets or tubing of varying thickness or samples of finished objects.

Solubility: practically insoluble in water, soluble in hot aromatic hydrocarbons, practically insoluble in anhydrous ethanol, in methanol and in hexane, which dissolves, however, low molecular mass polymers.

It burns with a blue flame.

The temperature at which the substance softens changes with the vinyl acetate content: from about 100 °C for contents of a few per cent to about 70 °C for contents of 30 per cent.

IDENTIFICATION

If necessary, cut the samples of material to be examined into pieces of maximum dimension on a side of not greater than 1 cm.

Infrared absorption spectrophotometry (*2.2.24*).

Preparation: to 0.25 g add 10 mL of *toluene R* and boil under a reflux condenser for about 15 min. Place a few drops of the solution obtained on a disc of sodium chloride and evaporate the solvent in an oven at 80 °C.

Absorption maxima due to vinyl acetate: at 1740 cm^{-1}, 1375 cm^{-1}, 1240 cm^{-1}, 1020 cm^{-1} and 610 cm^{-1}.

Absorption maxima due to ethylene: at 2920-2850 cm^{-1}, 1470 cm^{-1}, 1460 cm^{-1}, 1375 cm^{-1}, 730 cm^{-1} and 720 cm^{-1}.

The spectrum obtained is identical to the spectrum obtained with the type sample provided by the manufacturer. If the material to be examined is in the form of sheets, the spectrum may be determined directly on a cut piece of suitable size.

TESTS

If necessary, cut the samples of the material to be examined into pieces of maximum dimension on a side of not greater than 1 cm.

Solution S1. Place 2.0 g in a borosilicate-glass flask with a ground-glass neck. Add 80 mL of *toluene R* and heat under a reflux condenser with constant agitation for 90 min. Allow to cool to 60 °C and add 120 mL of *methanol R* to the flask with constant stirring. Filter the solution through a sintered-glass filter (16) (*2.1.2*). Rinse the flask and the filter with 25 mL of a mixture of 40 mL of *toluene R* and 60 mL of *methanol R*, add the rinsing mixture to the filtrate and dilute to 250 mL with the same mixture of solvents.

Solution S2. *Use within 4 h of preparation*. Place 25 g in a borosilicate-glass flask with a ground-glass neck. Add 500 mL of *water for injections R* and boil under a reflux condenser for 5 h. Allow to cool and decant. Reserve a portion of the solution for the test for appearance of solution S2 and filter the rest through a sintered-glass filter (16) (*2.1.2*).

Appearance of solution S2. Solution S2 is clear (*2.2.1*) and colourless (*2.2.2, Method II*).

Acidity or alkalinity. To 100 mL of solution S2 add 0.15 mL of *BRP indicator solution R*. Not more than 1.0 mL of *0.01 M sodium hydroxide* is required to change the colour of the indicator to blue. To 100 mL of solution S2 add 0.2 mL of *methyl orange solution R*. Not more than 1.5 mL of *0.01 M hydrochloric acid* is required to reach the beginning of the colour change of the indicator from yellow to orange.

Absorbance (*2.2.25*): maximum 0.2 determined between wavelengths of 220 nm and 340 nm on solution S2.

Reducing substances. To 20 mL of solution S2 add 1 mL of *dilute sulfuric acid R* and 20 mL of *0.002 M potassium permanganate*. Boil under a reflux condenser for 3 min and cool immediately. Add 1 g of *potassium iodide R* and titrate immediately with *0.01 M sodium thiosulfate*, using 0.25 mL of *starch solution R* as indicator. Carry out a blank titration. The difference between the titration volumes is not more than 0.5 mL.

Amides and stearic acid. Thin-layer chromatography (*2.2.27*).

Test solution. Evaporate 100 mL of solution S1 to dryness *in vacuo* at 45 °C. Dissolve the residue in 2 mL of *acidified methylene chloride R*.

Reference solution (a). Dissolve 20 mg of *stearic acid CRS* (plastic additive 19) in 10 mL of *methylene chloride R*.

Reference solution (b). Dissolve 40 mg of *plastic additive 20 CRS* in 10 mL of *methylene chloride R*. Dilute 1 mL of this solution to 5 mL with *methylene chloride R*.

Reference solution (c). Dissolve 40 mg of *plastic additive 21 CRS* in 10 mL of *methylene chloride R*. Dilute 1 mL of this solution to 5 mL with *methylene chloride R*.

Plates: *TLC silica gel GF_{254} plate R* (2 plates).

A. *Mobile phase*: *anhydrous ethanol R*, *trimethylpentane R* (25:75 *V/V*).

Application: 10 µL.

Development: over a path of 10 cm.

Drying: in air.

Detection: spray with a 2 g/L solution of *dichlorophenolindophenol, sodium salt R* in *anhydrous ethanol R* and heat in an oven at 120 °C for a few minutes to intensify the spots.

Limit: any spot corresponding to plastic additive 19 in the chromatogram obtained with the test solution is not more intense than the spot in the chromatogram obtained with reference solution (a).

B. *Mobile phase A*: *hexane R*.

Mobile phase B: *methanol R*, *methylene chloride R* (5:95 *V/V*).

Application: 10 µL.

Development A: over a path of 13 cm with mobile phase A.

Drying A: in air.

Development B: over a path of 10 cm with mobile phase B.

Drying B: in air.

Detection: spray with a 40 g/L solution of *phosphomolybdic acid R* in *anhydrous ethanol R* and heat in an oven at 120 °C until spots appear.

Limit: any spots corresponding to plastic additive 21 or plastic additive 20 in the chromatogram obtained with the test solution are not more intense than the spots in the chromatograms obtained with reference solutions (b) and (c) respectively.

Phenolic antioxidants. Liquid chromatography (*2.2.29*).

Solvent mixture: *acetonitrile R*, *tetrahydrofuran R* (50:50 *V/V*).

Test solution (a). Evaporate 50 mL of solution S1 to dryness *in vacuo* at 45 °C and dissolve the residue in 5.0 mL of the solvent mixture.

Test solution (b). Evaporate 50 mL of solution S1 to dryness *in vacuo* at 45 °C and dissolve the residue in 5.0 mL of *methylene chloride R*.

Reference solution (a). Dissolve 25 mg of *butylhydroxytoluene CRS* (plastic additive 07), 40 mg of *plastic additive 10 CRS*, 40 mg of *plastic additive 09 CRS* and 40 mg of *plastic additive 11 CRS* in 10 mL of the solvent mixture. Dilute 2 mL of this solution to 50.0 mL with the solvent mixture.

Reference solution (b). Dissolve 40 mg of *plastic additive 11 CRS* and 40 mg of *plastic additive 12 CRS* in 10 mL of *methylene chloride R*. Dilute 2 mL of this solution to 50.0 mL with *methylene chloride R*.

Column:

- *size*: *l* = 0.25 m; Ø = 4.6 mm;
- *stationary phase*: *octadecylsilyl silica gel for chromatography R* (5 µm).

Mobile phase: *water R*, *tetrahydrofuran R*, *acetonitrile R* (10:30:60 *V/V/V*).

Flow rate: 1.5 mL/min.

Detection: spectrophotometer at 280 nm.

Injection: 20 µL of test solution (a) and reference solution (a).

System suitability: reference solution (a):

- *resolution*: minimum 2.0 between the peaks due to plastic additive 09 and plastic additive 10;

– *number of theoretical plates*: minimum 2500, calculated for the peak due to plastic additive 07.

Limits:

– the chromatogram obtained with test solution (a) shows only principal peaks corresponding to the peaks in the chromatogram obtained with reference solution (a) with a retention time greater than 2 min;
– the areas of the peaks in the chromatogram obtained with test solution (a) are not greater than those of the corresponding peaks in the chromatogram obtained with reference solution (a), except for the last peak eluted in the chromatogram obtained with reference solution (a).

If the chromatogram obtained with test solution (a) shows a peak with the same retention time as the last antioxidant eluted from reference solution (a), carry out the test as described with the following modifications.

Mobile phase: *water R*, *2-propanol R*, *methanol R* (5:45:50 *V/V/V*).

Injection: 20 µL of test solution (b) and reference solution (b).

System suitability: reference solution (b):

– *resolution*: minimum 2.0 between the peaks due to plastic additive 11 and plastic additive 12.

Limits:

– the chromatogram obtained with test solution (b) shows only principal peaks corresponding to the peaks in the chromatogram obtained with reference solution (b) with a retention time greater than 3 min;
– the areas of the peaks in the chromatogram obtained with test solution (b) are not greater than those of the corresponding peaks in the chromatogram obtained with reference solution (b).

Substances soluble in hexane. Place 5 g in a borosilicate-glass flask with a ground-glass neck. Add 50 mL of *hexane R*, fit a condenser and boil under reflux on a water-bath with constant stirring for 4 h. Cool in iced-water; a gel may form. Adapt a cooling jacket filled with iced water to a sintered-glass filter (16) (*2.1.2*) fitted with a device allowing pressure to be applied during filtration. Allow the filter to cool for 15 min. Filter the hexane solution applying a gauge pressure of 27 kPa and without washing the residue; the filtration time must not exceed 5 min. Evaporate 20 mL of the solution to dryness on a water-bath. Dry at 100 °C for 1 h. The mass of the residue is not greater than 40 mg (2 per cent) if copolymer is used for containers and not greater than 0.1 g (5 per cent) if copolymer is used for tubing.

Sulfated ash (*2.4.14*): maximum 1.2 per cent, determined on 5.0 g.

ASSAY

Introduce 0.250 g to 1.000 g of the substance to be examined, according to the vinyl acetate content of the copolymer to be examined, into a 300 mL conical flask with a ground-glass neck containing a magnetic stirrer. Add 40 mL of *xylene R*. Boil under a reflux condenser with stirring for 4 h. Stirring continuously, allow to cool until precipitation begins before slowly adding 25.0 mL of *alcoholic potassium hydroxide solution R1*. Boil again under a reflux condenser with stirring for 3 h. Allow to cool with continued stirring, rinse the condenser with 50 mL of *water R* and add 30.0 mL of *0.05 M sulfuric acid* to the flask. Transfer the contents of the flask into a 400 mL beaker; rinse the flask with two quantities, each of 50 mL, of a 200 g/L solution of *anhydrous sodium sulfate R* and three quantities, each of 20 mL, of *water R* and add all the rinsings to the beaker containing the initial solution. Titrate the excess sulfuric acid with *0.1 M sodium hydroxide*, determining the end-point potentiometrically (*2.2.20*). Carry out a blank titration.

1 mL of *0.05 M sulfuric acid* is equivalent to 8.609 mg of vinyl acetate.

01/2008:30108

3.1.8. SILICONE OIL USED AS A LUBRICANT

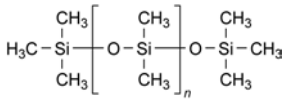

DEFINITION

Silicone oil used as a lubricant is a poly(dimethylsiloxane) obtained by hydrolysis and polycondensation of dichlorodimethylsilane and chlorotrimethylsilane. Different grades exist which are characterised by a number indicating the nominal viscosity placed after the name.

Silicone oils used as lubricants have a degree of polymerisation (n = 400 to 1200) such that their kinematic viscosities are nominally between 1000 $mm^2 \cdot s^{-1}$ and 30 000 $mm^2 \cdot s^{-1}$.

CHARACTERS

Appearance: clear, colourless liquid of various viscosities.

Solubility: practically insoluble in water and in methanol, very slightly soluble in anhydrous ethanol, miscible with ethyl acetate, with methyl ethyl ketone and with toluene.

IDENTIFICATION

A. Kinematic viscosity at 25 °C (see Tests).
B. Infrared absorption spectrophotometry (*2.2.24*).
   Comparison: *silicone oil CRS*.
   The region of the spectrum from 850-750 cm^{-1} is not taken into account since it may show slight differences depending on the degree of polymerisation.
C. Heat 0.5 g in a test-tube over a small flame until white fumes begin to appear. Invert the tube over a 2nd tube containing 1 mL of a 1 g/L solution of *chromotropic acid, sodium salt R* in *sulfuric acid R* so that the fumes reach the solution. Shake the 2nd tube for about 10 s and heat on a water-bath for 5 min. The solution is violet.
D. In a platinum crucible, prepare the sulfated ash (*2.4.14*) using 50 mg. The white powder obtained gives the reaction of silicates (*2.3.1*).

TESTS

Acidity. To 2.0 g add 25 mL of a mixture of equal volumes of *anhydrous ethanol R* and *ether R*, previously neutralised to 0.2 mL of *bromothymol blue solution R1*, and shake. Not more than 0.15 mL of *0.01 M sodium hydroxide* is required to change the colour of the solution to blue.

Viscosity (*2.2.10*). Determine the dynamic viscosity at 25 °C. Calculate the kinematic viscosity taking the relative density to be 0.97. The kinematic viscosity is within the range 95 per cent to 105 per cent of the nominal viscosity stated on the label.

Mineral oils. Place 2 mL in a test-tube and examine in ultraviolet light at 365 nm. The fluorescence is not more intense than that of a solution containing 0.1 ppm of *quinine sulfate R* in *0.005 M sulfuric acid* examined in the same conditions.

Phenylated compounds. The refractive index (*2.2.6*) is not greater than 1.410.

Heavy metals: maximum 5 ppm.

Solvent mixture: *dilute ammonia R2*, 2 g/L solution of *hydroxylamine hydrochloride R* (1:9 *V/V*).

Mix 1.0 g with *methylene chloride R* and dilute to 20 mL with the same solvent. Add 1.0 mL of a freshly prepared 0.02 g/L solution of *dithizone R* in *methylene chloride R*, 0.5 mL of *water R* and 0.5 mL of the solvent mixture. At the same time, prepare the reference solution as follows: to 20 mL of *methylene chloride R* add 1.0 mL of a freshly prepared 0.02 g/L solution of *dithizone R* in *methylene chloride R*, 0.5 mL of *lead*

standard solution (10 ppm Pb) R and 0.5 mL of the solvent mixture. Immediately shake each solution vigorously for 1 min. Any red colour in the test solution is not more intense than that in the reference solution.

Volatile matter: maximum 2.0 per cent, determined on 2.00 g by heating in an oven at 150 °C for 24 h. Carry out the test using a dish 60 mm in diameter and 10 mm deep.

LABELLING

The label states:

- the nominal viscosity by a number placed after the name of the product;
- that the contents are to be used as a lubricant.

01/2008:30109

3.1.9. SILICONE ELASTOMER FOR CLOSURES AND TUBING

DEFINITION

Silicone elastomer complying with the following requirements is suitable for the manufacture of closures and tubing.

Silicone elastomer is obtained by cross-linking a linear polysiloxane constructed mainly of dimethylsiloxy units with small quantities of methylvinylsiloxy groups; the chain ends are blocked by trimethylsiloxy or dimethylvinylsiloxy groups.

The general formula of the polysiloxane is:

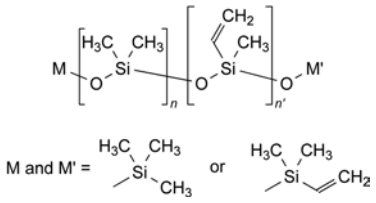

The cross-linking is carried out in the hot state:

- either with:
  - 2,4-dichlorobenzoyl peroxide for extruded products; or
  - 2,4-dichlorobenzoyl peroxide or dicumyl peroxide or *OO*-(1,1-dimethylethyl) *O*-isopropyl monoperoxycarbonate or 2,5-bis[(1,1-dimethylethyl)dioxy]-2,5-dimethylhexane for moulded products;
- or by hydrosilylation by means of polysiloxane with -SiH groups using platinum as a catalyst.

In all cases, appropriate additives are used such as silica and sometimes small quantities of organosilicon additives (α,ω-dihydroxypolydimethylsiloxane).

CHARACTERS

Appearance: transparent or translucent material.

Solubility: practically insoluble in organic solvents, some of which, for example cyclohexane, hexane and methylene chloride, cause a reversible swelling of the material.

IDENTIFICATION

A. Infrared absorption spectrophotometry (*2.2.24*) by the multiple reflection method for solids.

   Comparison: *silicone elastomer CRS*.

B. Heat 1.0 g in a test-tube over a small flame until white fumes begin to appear. Invert the tube over a 2nd tube containing 1 mL of a 1 g/L solution of *chromotropic acid, sodium salt R* in *sulfuric acid R* so that the fumes reach the solution. Shake the 2nd tube for about 10 s and heat on a water-bath for 5 min. The solution is violet.

C. 50 mg of the residue of combustion gives the reaction of silicates (*2.3.1*).

TESTS

If necessary, cut the material into pieces of maximum dimension on a side of not greater than 1 cm.

Solution S. Place 25 g in a borosilicate-glass flask with a ground-glass neck. Add 500 mL of *water R* and boil under a reflux condenser for 5 h. Allow to cool and decant the solution.

Appearance of solution. Solution S is clear (*2.2.1*).

Acidity or alkalinity. To 100 mL of solution S add 0.15 mL of *bromothymol blue solution R1*. Not more than 2.5 mL of *0.01 M sodium hydroxide* is required to change the colour of the indicator to blue. To a further 100 mL of solution S, add 0.2 mL of *methyl orange solution R*. Not more than 1.0 mL of *0.01 M hydrochloric acid* is required to reach the beginning of the colour change of the indicator from yellow to orange.

Relative density (*2.2.5*): 1.05 to 1.25, determined using a density bottle with *anhydrous ethanol R* as the immersion liquid.

Reducing substances. To 20 mL of solution S add 1 mL of *dilute sulfuric acid R* and 20 mL of *0.002 M potassium permanganate*. Allow to stand for 15 min. Add 1 g of *potassium iodide R* and titrate immediately with *0.01 M sodium thiosulfate* using 0.25 mL of *starch solution R* as indicator. Carry out a blank titration using 20 mL of *water R* instead of solution S. The difference between the titration volumes is not more than 1.0 mL.

Substances soluble in hexane: maximum 3 per cent.

Evaporate 25 mL of the solution obtained in the test for phenylated compounds in a glass evaporating dish on a water-bath and dry in an oven at 100-105 °C for 1 h. The residue weighs not more than 15 mg.

Phenylated compounds. Place 2.0 g in a borosilicate-glass flask with a ground-glass neck and add 100 mL of *hexane R*. Boil under a reflux condenser for 4 h. Cool, then filter rapidly through a sintered-glass filter (16) (*2.1.2*). Collect the filtrate and close the container immediately to avoid evaporation. At wavelengths from 250 nm to 340 nm, the absorbance (*2.2.25*) is not greater than 0.4.

Mineral oils. Place 2 g in a 100 mL conical flask containing 30 mL of a mixture of 5 volumes of *ammonia R* and 95 volumes of *pyridine R*. Allow to stand for 2 h, shaking frequently. Decant the pyridine solution and examine in ultraviolet light at 365 nm. The fluorescence is not greater than that of a solution containing 1 ppm of *quinine sulfate R* in *0.005 M sulfuric acid* examined in the same conditions.

Volatile matter: maximum 0.5 per cent for silicone elastomer prepared using peroxides; maximum 2.0 per cent for silicone elastomer prepared using platinum.

Weigh 10.0 g of the substance previously stored for 48 h in a desiccator over *anhydrous calcium chloride R*. Heat in an oven at 200 °C for 4 h, allow to cool in a desiccator and weigh again.

Silicone elastomer prepared using peroxides complies with the following additional test:

Residual peroxides: maximum 0.08 per cent calculated as dichlorobenzoyl peroxide.

Place 5 g in a borosilicate-glass flask, add 150 mL of *methylene chloride R* and close the flask. Stir with a mechanical stirrer for 16 h. Filter rapidly, collecting the filtrate in a flask with a ground-glass neck. Replace the air in the container with *oxygen-free nitrogen R*, introduce 1 mL of a 200 g/L solution of *sodium iodide R* in *anhydrous acetic acid R*, close the flask, shake thoroughly and allow to stand protected from light for 30 min. Add 50 mL of *water R* and titrate immediately with *0.01 M sodium thiosulfate*, using 0.25 mL of *starch solution R* as indicator. Carry out a blank titration. The difference between the titration volumes is not greater than 2.0 mL.

Silicone elastomer prepared using platinum complies with the following additional test:

Platinum: maximum 30 ppm.

In a quartz crucible, ignite 1.0 g of the material to be examined, raising the temperature gradually until a white residue is obtained. Transfer the residue to a graphite crucible. To the

quartz crucible add 10 mL of a freshly prepared mixture of 1 volume of *nitric acid R* and 3 volumes of *hydrochloric acid R*, heat on a water-bath for 1-2 min and transfer to the graphite crucible. Add 5 mg of *potassium chloride R* and 5 mL of *hydrofluoric acid R* and evaporate to dryness on a water-bath. Add 5 mL of *hydrofluoric acid R* and evaporate to dryness again; repeat this operation twice. Dissolve the residue in 5 mL of *1 M hydrochloric acid*, warming on a water-bath. Allow to cool and add the solution to 1 mL of a 250 g/L solution of *stannous chloride R* in *1 M hydrochloric acid*, rinse the graphite crucible with a few millilitres of *1 M hydrochloric acid* and dilute to 10.0 mL with the same acid.

Prepare simultaneously the reference solution as follows: to 1 mL of a 250 g/L solution of *stannous chloride R* in *1 M hydrochloric acid*, add 1.0 mL of *platinum standard solution (30 ppm Pt) R* and dilute to 10.0 mL with *1 M hydrochloric acid*.

The colour of the test solution is not more intense than that of the standard.

LABELLING

The label states whether the material was prepared using peroxides or platinum.

01/2008:30110
corrected 7.5

3.1.10. MATERIALS BASED ON NON-PLASTICISED POLY(VINYL CHLORIDE) FOR CONTAINERS FOR NON-INJECTABLE, AQUEOUS SOLUTIONS

DEFINITION

Materials based on non-plasticised poly(vinyl chloride) that comply with the following specifications are suitable for the manufacture of containers for non-injectable aqueous solutions. They may also be used for solid forms for oral administration and in some cases, subject to special studies on the compatibility of the container with its contents, these materials may be suitable for the preparation of containers for suppositories. They consist of 1 or more poly(vinyl chloride/vinyl acetate) or of a mixture of poly(vinyl chloride) and poly(vinyl acetate) or of poly(vinyl chloride).

The chlorine content expressed as poly(vinyl chloride) is not less than 80 per cent.

They may contain not more than 15 per cent of copolymers based on acrylic and/or methacrylic acids and/or their esters, and/or on styrene and/or butadiene.

PRODUCTION

Materials based on non-plasticised poly(vinyl chloride) are produced by polymerisation methods that guarantee a residual vinyl chloride content of less than 1 ppm. The manufacturing process is validated to demonstrate that the product complies with the following test.

Vinyl chloride. Head-space gas chromatography (*2.2.28*).

Internal standard solution. Using a microsyringe, inject 10 µL of *ether R* into 20.0 mL of *dimethylacetamide R*, immersing the tip of the needle in the solvent. Immediately before use, dilute the solution to 1000 times its volume with *dimethylacetamide R*.

Test solution. Place 1.000 g of the material to be examined in a 50 mL vial and add 10.0 mL of the internal standard solution. Close the vial and secure the stopper. Shake, avoiding contact between the stopper and the liquid. Place the vial in a water-bath at 60 ± 1 °C for 2 h.

Vinyl chloride primary solution. Prepare in a fume cupboard. Place 50.0 mL of *dimethylacetamide R* in a 50 mL vial, stopper the vial, secure the stopper and weigh to the nearest 0.1 mg. Fill a 50 mL polyethylene or polypropylene syringe with gaseous *vinyl chloride R*, allow the gas to remain in contact with the syringe for about 3 min, empty the syringe and fill again with 50 mL of gaseous *vinyl chloride R*. Fit a hypodermic needle to the syringe and reduce the volume of gas in the syringe from 50 mL to 25 mL. Inject these 25 mL of vinyl chloride slowly into the vial, shaking gently and avoiding contact between the liquid and the needle. Weigh the vial again; the increase in mass is about 60 mg (1 µL of the solution thus obtained contains about 1.2 µg of vinyl chloride). Allow to stand for 2 h. Keep the primary solution in a refrigerator.

Vinyl chloride standard solution: vinyl chloride primary solution, *dimethylacetamide R* (1:3 *V/V*).

Reference solutions. Place 10.0 mL of the internal standard solution in each of six 50 mL vials. Close the vials and secure the stoppers. Inject 1 µL, 2 µL, 3 µL, 5 µL and 10 µL, respectively, of the vinyl chloride standard solution into 5 of the vials. The 6 solutions thus obtained contain respectively, 0 µg, about 0.3 µg, 0.6 µg, 0.9 µg, 1.5 µg and 3 µg of vinyl chloride. Shake, avoiding contact between the stopper and the liquid. Place the vials in a water-bath at 60 ± 1 °C for 2 h.

Column:
- *material*: stainless steel;
- *size*: *l* = 3 m, Ø = 3 mm;
- *stationary phase*: *silanised diatomaceous earth for gas chromatography R* impregnated with 5 per cent *m/m* of *dimethylstearamide R* and 5 per cent *m/m* of *macrogol 400 R*.

Carrier gas: *nitrogen for chromatography R*.

Flow rate: 30 mL/min.

Temperature:
- *column*: 45 °C;
- *injection port*: 100 °C;
- *detector*: 150 °C.

Detection: flame ionisation.

Injection: 1 mL of the head space.

Limit:
- *vinyl chloride*: maximum 1 ppm.

Additives

In order to obtain the required mechanical and stability characteristics, materials based on non-plasticised poly(vinyl chloride) may contain:
- epoxidised soya oil of which the oxiran oxygen content is 6 per cent to 8 per cent and the iodine value is not greater than 6: maximum 8 per cent;
- calcium salt or zinc salts of aliphatic fatty acids with more than 7 carbon atoms: maximum 1.5 per cent or maximum 1.5 per cent of their mixture;
- liquid paraffin: maximum 1.5 per cent;
- waxes: maximum 1.5 per cent;
- hydrogenated oils or esters of aliphatic fatty acids: maximum 2 per cent;
- macrogol esters: maximum 1.5 per cent;
- sorbitol: maximum 1.5 per cent;
- 2,4-dinonylphenyl phosphite, or di(4-nonylphenyl) phosphite or tris(nonylphenyl) phosphite: maximum 1 per cent.

They may contain one of the following groups of stabilisers:
- tin as di(isooctyl) 2,2′-[(dioctylstannylene)bis(thio)]-diacetate containing about 27 per cent of tri(isooctyl) 2,2′,2″-[(monooctylstannylidyne)tris(thio)]triacetate: maximum 0.25 per cent;
- tin as a mixture containing not more than 76 per cent of di(isooctyl) 2,2′-[(dimethylstannylene)bis(thio)]diacetate and not more than 85 per cent of tri(isooctyl) 2,2′,2″-[(monomethylstannylidyne)tris(thio)]triacetate; (isooctyl is e.g. 2-ethylhexyl): maximum 0.25 per cent;

– 1-phenyleicosane-1,3-dione (benzoylstearoylmethane) or 2-(4-dodecylphenyl)indole or didodecyl 1,4-dihydropyridine-2,6-dimethyl-3,5-dicarboxylate: maximum 1 per cent or 1 per cent of a mixture of two of these.

They may contain a colorant or pigment and may be opacified by titanium dioxide.

The supplier of the material must be able to demonstrate that the qualitative and quantitative composition of the type sample is satisfactory for each production batch.

CHARACTERS

Appearance: powder, beads, granules, sheets of varying thicknesses or samples taken from finished objects.

Solubility: insoluble in water, soluble in tetrahydrofuran, slightly soluble in methylene chloride, insoluble in anhydrous ethanol.

They burn with an orange-yellow flame edged with green, giving off thick black smoke.

IDENTIFICATION

Infrared absorption spectrophotometry (*2.2.24*).

Preparation. Dissolve the residue A (see Tests: solution S2) in 5 mL of *tetrahydrofuran R*. Apply a few drops of the solution to a sodium chloride plate and evaporate to dryness in an oven at 100-105 °C.

Absorption maxima: at 2975 cm^{-1}, 2910 cm^{-1}, 2865 cm^{-1}, 1430 cm^{-1}, 1330 cm^{-1}, 1255 cm^{-1}, 690 cm^{-1} and 615 cm^{-1}.

The spectrum obtained is identical to that of the material selected for the type sample.

TESTS

If necessary, cut the samples of the material to be examined into pieces with a maximum dimension on a side of not greater than 1 cm.

Solution S1. Place 25 g in a borosilicate-glass flask. Add 500 mL of *water R* and cover the neck of the flask with aluminium foil or a borosilicate-glass beaker. Heat in an autoclave for 121 ± 2 °C for 20 min. Allow to cool and allow the solids to settle.

Solution S2. Dissolve 5.0 g in 80 mL of *tetrahydrofuran R* and dilute to 100 mL with the same solvent. Filter if necessary (the solution may remain opalescent). To 20 mL of the solution add, dropwise and with gentle shaking, 70 mL of *ethanol (96 per cent) R*. Cool in ice for 1 h. Filter or centrifuge (residue A). Wash the residue A with *ethanol (96 per cent) R*, add the washings to the filtrate or the centrifugation liquid and, dilute to 100 mL with *ethanol (96 per cent) R*.

Solution S3. Place 5 g in a borosilicate-glass flask with a ground-glass neck. Add 100 mL of *0.1 M hydrochloric acid* and boil under a reflux condenser for 1 h. Allow to cool and allow the solids to settle.

Appearance of solution S1. Solution S1 is not more opalescent than reference suspension II (*2.2.1*) and is colourless (*2.2.2, Method II*).

Absorbance of solution S1 (*2.2.25*). Evaporate 100 mL of solution S1 to dryness. Dissolve the residue in 5 mL of *hexane R*. Filter if necessary through a filter previously rinsed with *hexane R*. At wavelengths from 250 nm to 310 nm, the absorbance of the filtrate is not greater than 0.25.

Absorbance of solution S2 (*2.2.25*): maximum 0.2 for tin-stabilised materials or 0.4 for other materials determined between wavelengths of 250 nm and 330 nm on solution S2.

Extractable barium: maximum 2 ppm.

Inductively coupled plasma-atomic emission spectrometry (*2.2.57*).

Test solution. Solution S3.

Reference solution. A solution containing 0.1 ppm of barium prepared by dilution of *barium standard solution (50 ppm Ba) R* with *0.1 M hydrochloric acid*.

Wavelength: use the emission of barium at 455.40 nm, the spectral background being taken at 455.30 nm.

Verify the absence of barium in the hydrochloric acid used.

Examined at 455.40 nm, the emission of the test solution is not greater than that of the reference solution.

Extractable cadmium: maximum 0.6 ppm.

Atomic absorption spectrometry (*2.2.23, Method I*).

Test solution. Solution S3.

Reference solution. A solution containing 0.03 ppm of cadmium prepared by diluting *cadmium standard solution (0.1 per cent Cd) R* with *0.1 M hydrochloric acid*.

Verify the absence of cadmium in the hydrochloric acid used.

Examined at 228.8 nm, the absorbance of the test solution is not greater than that of the reference solution.

Tin-stabilised materials: maximum 0.25 per cent of Sn.

Tin stock solution. Dilute 81 mg of *plastic additive 23 CRS* to 100.0 mL with *tetrahydrofuran R*.

Tin standard solution. Dilute 20 mL of the tin stock solution to 100.0 mL with *ethanol (96 per cent) R*.

To 0.10 mL of solution S2 in a test tube add 0.05 mL of *1 M hydrochloric acid*, 0.5 mL of *potassium iodide solution R* and 5 mL of *ethanol (96 per cent) R*. Mix thoroughly and wait for 5 min. Add 9 mL of *water R* and 0.1 mL of a 5 g/L solution of *sodium sulfite R* and mix thoroughly. Add 1.5 mL of *dithizone solution R* freshly diluted 100-fold with *methylene chloride R*, shake for 15 s and allow to stand for 2 min. At the same time prepare a reference solution in the same manner using 0.1 mL of the tin standard solution.

Any violet colour in the lower layer obtained with solution S2 is not more intense than that obtained with the reference solution. The greenish-blue colour of dithizone solution turns pink in the presence of tin.

Non-tin stabilised materials: maximum 25 ppm of Sn.

To 5 mL of solution S2 in a test tube add 0.05 mL of *1 M hydrochloric acid* and 0.5 mL of *potassium iodide solution R*. Mix thoroughly and wait for 5 min. Add 9 mL of *water R* and 0.1 mL of a 5 g/L solution of *sodium sulfite R* and mix thoroughly. If the solution obtained is not colourless, add the sodium sulfite solution in 0.05 mL fractions. Add 1.5 mL of *dithizone solution R* freshly diluted 100-fold with *methylene chloride R*, shake for 15 s and allow to stand for 2 min. At the same time prepare a reference solution in the same manner using 0.05 mL of the tin standard solution (see test above).

Any violet colour in the lower layer obtained with solution S2 is not more intense than that obtained with the reference solution.

Extractable heavy metals (*2.4.8*): maximum 20 ppm.

12 mL of solution S3 complies with test A. Prepare the reference solution using 10 mL of *lead standard solution (1 ppm Pb) R*.

Extractable zinc: maximum 100 ppm.

Atomic absorption spectrometry (*2.2.23, Method I*).

Test solution. Solution S3 diluted 10-fold with *water R*.

Reference solution. A solution containing 0.50 ppm of zinc prepared by dilution of *zinc standard solution (5 mg/mL Zn) R* with *0.01 M hydrochloric acid*.

Verify the absence of zinc in the hydrochloric acid used.

Examined at 214.0 nm, the absorbance of the test solution is not greater than that of the reference solution.

Sulfated ash (*2.4.14*): maximum 1.0 per cent, determined on 1.0 g; maximum 4.0 per cent when the materials are opacified using titanium dioxide.

ASSAY

Carry out the oxygen-flask method (*2.5.10*) using 50.0 mg of the material to be examined. Absorb the combustion products in 20 mL of *1 M sodium hydroxide*. To the solution obtained add 1 mL of *dibutyl phthalate R*, 2.5 mL of *nitric acid R*, 5 mL of *ferric ammonium sulfate solution R2* and 10.0 mL of *0.1 M silver nitrate*. Titrate with *0.05 M ammonium thiocyanate* until a reddish-yellow colour is obtained. Carry out a blank titration.

1 mL of *0.1 M silver nitrate* is equivalent to 6.25 mg of poly(vinyl chloride).

04/2009:30111
corrected 7.0

3.1.11. MATERIALS BASED ON NON-PLASTICISED POLY(VINYL CHLORIDE) FOR CONTAINERS FOR DRY DOSAGE FORMS FOR ORAL ADMINISTRATION

DEFINITION

Materials based on non-plasticised poly(vinyl chloride) for containers for dry dosage forms for oral administration are suitable for the manufacture of sheets or containers, and consist of 1 or more poly(vinyl chloride/vinyl acetate) or of a mixture of poly(vinyl chloride) and poly(vinyl acetate) or of poly(vinyl chloride).

The chlorine content expressed as poly(vinyl chloride) is not less than 80 per cent.

They may contain not more than 15 per cent of copolymers based on acrylic and/or methacrylic acids and/or their esters, and/or on styrene and/or butadiene.

PRODUCTION

Materials based on non-plasticised poly(vinyl chloride) are produced by polymerisation methods that guarantee a residual vinyl chloride content of less than 1 ppm. The manufacturing process is validated to demonstrate that the product complies with the following test for vinyl chloride.

Vinyl chloride. Head-space gas chromatography (*2.2.28*).

Internal standard solution. Using a microsyringe, inject 10 µL of *ether R* into 20.0 mL of *dimethylacetamide R*, immersing the tip of the needle in the solvent. Immediately before use, dilute the solution to 1000 times its volume with *dimethylacetamide R*.

Test solution. Place 1.000 g of the material to be examined in a 50 mL vial and add 10.0 mL of the internal standard solution. Close the vial and secure the stopper. Shake, avoiding contact between the stopper and the liquid. Place the vial in a water-bath at 60 ± 1 °C for 2 h.

Vinyl chloride primary solution. Prepare in a fume cupboard. Place 50.0 mL of *dimethylacetamide R* in a 50 mL vial, stopper the vial, secure the stopper and weigh to the nearest 0.1 mg. Fill a 50 mL polyethylene or polypropylene syringe with gaseous *vinyl chloride R*, allow the gas to remain in contact with the syringe for about 3 min, empty the syringe and fill again with 50 mL of gaseous *vinyl chloride R*. Fit a hypodermic needle to the syringe and reduce the volume of gas in the syringe from 50 mL to 25 mL. Inject the 25 mL of vinyl chloride slowly into the vial, shaking gently and avoiding contact between the liquid and the needle. Weigh the vial again; the increase in mass is about 60 mg (1 µL of the solution thus obtained contains about 1.2 µg of vinyl chloride). Allow to stand for 2 h. Keep the primary solution in a refrigerator.

Vinyl chloride standard solution: vinyl chloride primary solution, *dimethylacetamide R* (1:3 *V/V*).

Reference solutions. Place 10.0 mL of the internal standard solution in each of six 50 mL vials. Close the vials and secure the stoppers. Inject 1 µL, 2 µL, 3 µL, 5 µL and 10 µL, respectively, of the vinyl chloride standard solution into 5 of the vials. The 6 solutions thus obtained contain respectively, 0 µg, about 0.3 µg, 0.6 µg, 0.9 µg, 1.5 µg and 3 µg of vinyl chloride. Shake, avoiding contact between the stopper and the liquid. Place the vials in a water-bath at 60 ± 1 °C for 2 h.

Column:
- *material*: stainless steel;
- *size*: *l* = 3 m, Ø = 3 mm;
- *stationary phase*: *silanised diatomaceous earth for gas chromatography R* impregnated with 5 per cent *m/m* of *dimethylstearamide R* and 5 per cent *m/m* of *macrogol 400 R*.

Carrier gas: *nitrogen for chromatography R*.

Flow rate: 30 mL/min.

Temperature:
- *column*: 45 °C;
- *injection port*: 100 °C;
- *detector*: 150 °C.

Detection: flame ionisation.

Injection: 1 mL of the head space.

Limit:
- *vinyl chloride*: maximum 1 ppm.

Additives

In order to obtain the required mechanical and stability characteristics, materials based on non-plasticised poly(vinyl chloride) may contain:
- epoxidised soya oil of which the oxiran oxygen content is 6 per cent to 8 per cent and the iodine value is not greater than 6 for tin-stabilised materials: maximum 2 per cent;
- epoxidised soya oil of which the oxiran oxygen content is 6 per cent to 8 per cent and the iodine value is not greater than 6 for non-tin-stabilised materials: maximum 3 per cent;
- calcium, magnesium or zinc salts of aliphatic fatty acids with more than 7 carbon atoms: maximum 1.5 per cent or maximum 1.5 per cent of their mixture;
- waxes: maximum 4 per cent;
- liquid paraffin: maximum 1.5 per cent;
- hydrogenated oils or esters of aliphatic fatty acids: maximum 2 per cent;
- the percentage sum of the 3 lubricants above: maximum 4 per cent;
- macrogol esters: maximum 1.5 per cent;
- sorbitol: maximum 1.5 per cent;
- 2,4-dinonylphenyl phosphite, or di(4-nonylphenyl) phosphite or tris(nonylphenyl) phosphite: maximum 1 per cent;
- calcium carbonate: maximum 1 per cent;
- silica: maximum 1 per cent.

They may contain one of the 3 following groups of stabilisers (where isooctyl is, for example, 2-ethylhexyl):
- tin as di(isooctyl) 2,2′-[(dioctylstannylene)bis(thio)]-diacetate containing about 27 per cent of tri(isooctyl) 2,2′2″-[(monooctylstannylidyne)tris(thio)]triacetate: maximum 0.25 per cent;
- tin as a mixture containing not more than 76 per cent of di(isooctyl) 2,2′-[(dimethylstannylene)bis(thio)]diacetate and not more than 85 per cent of tri(isooctyl) 2,2′,2″-[(monomethylstannylidyne)tris(thio)]triacetate: maximum 0.25 per cent;
- 1-phenyleicosane-1,3-dione (benzoylstearoylmethane): maximum 1 per cent.

They may contain a colorant or pigment and may be opacified by titanium dioxide.

The supplier of the material must be able to demonstrate that the qualitative and quantitative composition of the type sample is satisfactory for each production batch.

CHARACTERS

Appearance: powder, beads, granules, sheets of varying thicknesses or samples taken from finished objects.

Solubility: insoluble in water, soluble in tetrahydrofuran, slightly soluble in methylene chloride, insoluble in anhydrous ethanol.

They burn with an orange-yellow flame edged with green, giving off thick black smoke.

IDENTIFICATION

Infrared absorption spectrophotometry (*2.2.24*).

Preparation. Dissolve residue A (see Tests: solution S2) in 5 mL of *tetrahydrofuran R*. Apply a few drops of the solution to a sodium chloride plate and evaporate to dryness in an oven at 100-105 °C.

Absorption maxima: at 2975 cm^{-1}, 2910 cm^{-1}, 2865 cm^{-1}, 1430 cm^{-1}, 1330 cm^{-1}, 1255 cm^{-1}, 690 cm^{-1} and 615 cm^{-1}.

The spectrum obtained is identical to that of the material selected for the type sample.

TESTS

If necessary, cut the samples of the material to be examined into pieces with a maximum dimension on a side of not greater than 1 cm.

Solution S1. Place 25 g in a borosilicate-glass flask. Add 500 mL of *water R* and cover the neck of the flask with aluminium foil or a borosilicate glass beaker. Heat in an autoclave for 121 ± 2 °C for 20 min. Allow to cool and allow the solids to settle.

Solution S2. Dissolve 5.0 g in 80 mL of *tetrahydrofuran R* and dilute to 100 mL with the same solvent. Filter if necessary (the solution may remain opalescent). To 20 mL of the solution add, dropwise and with gentle shaking, 70 mL of *ethanol (96 per cent) R*. Cool in ice for 1 h. Filter or centrifuge (residue A). Wash residue A with *ethanol (96 per cent) R*, add the washings to the filtrate or the centrifugation liquid and dilute to 100 mL with *ethanol (96 per cent) R*.

Solution S3. Place 5 g in a borosilicate-glass flask with a ground-glass neck. Add 100 mL of *0.1 M hydrochloric acid* and boil under a reflux condenser for 1 h. Allow to cool and allow the solids to settle.

Appearance of solution S1. Solution S1 is not more opalescent than reference suspension II (*2.2.1*) and is colourless (*2.2.2, Method II*).

Absorbance of solution S1 (*2.2.25*). Evaporate 100 mL of solution S1 to dryness. Dissolve the residue in 5 mL of *hexane R*. Filter if necessary through a filter previously rinsed with *hexane R*. At wavelengths from 250 nm to 310 nm, the absorbance of the filtrate is not greater than 0.3.

Absorbance of solution S2 (*2.2.25*): maximum 1.0, determined between wavelengths of 250 nm and 330 nm on solution S2 for material that does not contain 1-phenyleicosane-1,3-dione; maximum 0.4, determined between wavelengths of 250 nm and 330 nm on a 10-fold dilution of solution S2 in *ethanol (96 per cent) R* for material that contains 1-phenyleicosane-1,3-dione.

Tin-stabilised materials: maximum 0.25 per cent of Sn.

Tin stock solution. Dilute 81 mg of *plastic additive 23 CRS* to 100.0 mL with *tetrahydrofuran R*.

Tin standard solution. Dilute 20 mL of the tin stock solution to 100.0 mL with *ethanol (96 per cent) R*.

To 0.10 mL of solution S2 in a test tube add 0.05 mL of *1 M hydrochloric acid*, 0.5 mL of *potassium iodide solution R* and 5 mL of *ethanol (96 per cent) R*. Mix thoroughly and wait for 5 min. Add 9 mL of *water R* and 0.1 mL of a 5 g/L solution of *sodium sulfite R* and mix thoroughly. Add 1.5 mL of *dithizone solution R* freshly diluted 100-fold with *methylene chloride R*, shake for 15 s and allow to stand for 2 min. At the same time prepare a reference solution in the same manner using 0.1 mL of the tin standard solution.

Any violet colour in the lower layer obtained with solution S2 is not more intense than that obtained with the reference solution. The greenish-blue colour of dithizone solution turns pink in the presence of tin.

Non-tin-stabilised materials: maximum 25 ppm of Sn.

To 5 mL of solution S2 in a test tube add 0.05 mL of *1 M hydrochloric acid* and 0.5 mL of *potassium iodide solution R*. Mix thoroughly and wait for 5 min. Add 9 mL of *water R* and 0.1 mL of a 5 g/L solution of *sodium sulfite R* and mix thoroughly. If the solution obtained is not colourless, add the sodium sulfite solution in 0.05 mL fractions. Add 1.5 mL of *dithizone solution R* freshly diluted 100-fold with *methylene chloride R*, shake for 15 s and allow to stand for 2 min. At the same time prepare a reference solution in the same manner using 0.05 mL of the tin standard solution (see test above).

Any violet colour in the lower layer obtained with solution S2 is not more intense than that obtained with the reference solution.

Extractable heavy metals (*2.4.8*): maximum 20 ppm.

12 mL of solution S3 complies with test A. Prepare the reference solution using 10 mL of *lead standard solution (1 ppm Pb) R*.

Extractable zinc: maximum 100 ppm.

Atomic absorption spectrometry (*2.2.23, Method I*).

Test solution. Solution S3 diluted 10-fold with *water R*.

Reference solution. A solution containing 0.50 ppm of zinc prepared by dilution of *zinc standard solution (5 mg/mL Zn) R* with *0.01 M hydrochloric acid*.

Verify the absence of zinc in the hydrochloric acid used.

Examined at 214.0 nm, the absorbance of the test solution is not greater than that of the reference solution.

Sulfated ash (*2.4.14*): maximum 1.0 per cent, determined on 1.0 g; maximum 4.0 per cent when the materials are opacified using titanium dioxide.

ASSAY

Carry out the oxygen-flask method (*2.5.10*) using 50.0 mg of the material to be examined. Absorb the combustion products in 20 mL of *1 M sodium hydroxide*. To the solution obtained add 2.5 mL of *nitric acid R*, 10.0 mL of *0.1 M silver nitrate*, 5 mL of *ferric ammonium sulfate solution R2* and 1 mL of *dibutyl phthalate R*. Titrate with *0.05 M ammonium thiocyanate* until a reddish-yellow colour is obtained. Carry out a blank titration.

1 mL of *0.1 M silver nitrate* is equivalent to 6.25 mg of poly(vinyl chloride).

01/2008:30113
corrected 6.2

3.1.13. PLASTIC ADDITIVES

NOTE: the nomenclature given first is according to the IUPAC rules. The synonym given in bold corresponds to the name given in the texts of Chapter 3. The synonym corresponding to the rules of the texts of "Chemical Abstracts" is also given.

add01. $C_{24}H_{38}O_4$. [117-81-7]. PM RN 74640.

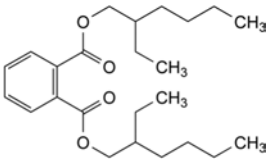

(2*RS*)-2-ethylhexyl benzene-1,2-dicarboxylate

synonyms: – **di(2-ethylhexyl) phthalate,**

– 1,2-benzenedicarboxylic acid, bis(2-ethylhexyl) ester.

add02. $C_{16}H_{30}O_4Zn$. [136-53-8]. PM RN 54120.

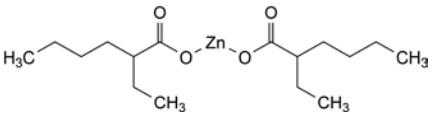

zinc (2*RS*)-2-ethylhexanoate

synonyms: – **zinc octanoate,**

– 2-ethylhexanoic acid, zinc salt (2:1),

– zinc 2-ethylcaproate.

add03. [05518-18-3]/[00110-30-5]. PM RN 53440/53520.

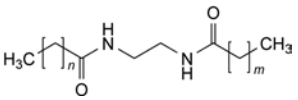

N,N′-ethylenedialcanamide (with *n* and *m* = 14 or 16)

synonyms: – ***N,N′*-diacylethylenediamines,**

– *N,N′*-diacylethylenediamine (in this context acyl means in particular palmitoyl and stearoyl).

add04. [8013-07-8]. PM RN 88640.

epoxidised soya oil

add05. [8016-11-3]. PM RN 64240.

epoxidised linseed oil

add06. [57455-37-5](TSCA)/[101357-30-6] (EINECS)/Pigment blue 29 (CI 77007)

ultramarine blue

add07. $C_{15}H_{24}O$. [128-37-0] PM RN 46640.

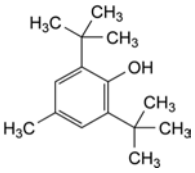

2,6-bis(1,1-dimethylethyl)-4-methylphenol

synonyms: – **butylhydroxytoluene,**

– 2,6-bis(1,1-dimethylethyl)-4-methylphenol,

– 2,6-di-*tert*-butyl-4-methylphenol.

add08. $C_{50}H_{66}O_8$. [32509-66-3]. PM RN 53670.

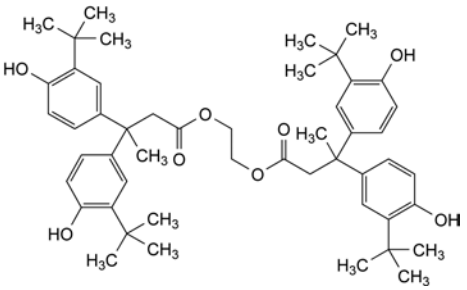

ethylene bis[3,3-bis[3-(1,1-dimethylethyl)-4-hydroxyphenyl]butanoate]

synonyms: – **ethylene bis[3,3-bis[3-(1,1-dimethylethyl)-4-hydroxyphenyl]butanoate],**

– butanoic acid, 3,3-bis[3-(1,1-dimethylethyl)-4-hydroxyphenyl]-, 1,2-ethanediyl ester,

– ethylene bis[3,3-bis(3-*tert*-butyl-4-hydroxyphenyl)butyrate].

add09. $C_{73}H_{108}O_{12}$. [6683-19-8]. PM RN 71680.

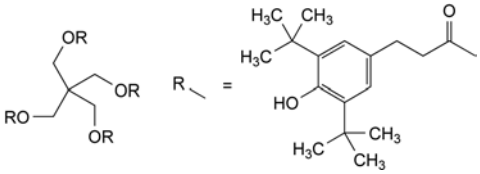

methanetetryltetramethyl tetrakis[3-[3,5-bis(1,1-dimethylethyl)-4-hydroxyphenyl]propanoate]

synonyms: – **pentaerythrityl tetrakis[3-(3,5-di-*tert*-butyl-4-hydroxyphenyl)propionate],**

– 2,2-bis[[[3-[3,5-bis(1,1-dimethylethyl)-4-hydroxyphenyl]propanoyl]oxy]methyl]propane-1,3-diyl 3-[3,5-bis(1,1-dimethylethyl)-4-hydroxyphenyl]propanoate,

– benzenepropanoic acid, 3,5-bis(1,1-dimethylethyl)-4-hydroxy-2,2-bis(hydroxymethyl)-propane-1,3-diol ester (4:1),

– 2,2-bis(hydroxymethyl)propane-1,3-diol tetrakis[3-(3,5-di-*tert*-butyl-4-hydroxyphenyl)-propionate].

add10. $C_{54}H_{78}O_3$. [1709-70-2]. PM RN 95200.

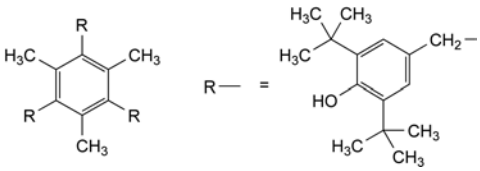

4,4′,4″-[(2,4,6-trimethylbenzene-1,3,5-triyl)tris(methylene)]-tris[2,6-bis(1,1-dimethylethyl)phenol]

synonyms: – **2,2′,2″,6,6′,6″-hexa-*tert*-butyl-4,4′,4″-[(2,4,6-trimethyl-1,3,5-benzenetriyl)trismethylene]triphenol,**

– 1,3,5-tris[3,5-di-*tert*-butyl-4-hydroxybenzyl]-2,4,6-trimethylbenzene,

– phenol, 4,4′,4″-[(2,4,6-trimethyl-1,3,5-benzenetriyl)tris(methylene)]tris[2,6-bis(1,1-dimethylethyl)-.

add11. $C_{35}H_{62}O_3$. [2082-79-3]. PM RN 68320.

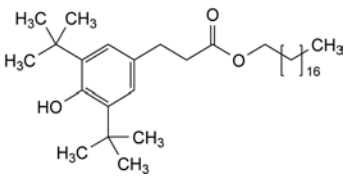

octadecyl 3-[3,5-bis(1,1-dimethylethyl)-4-hydroxyphenyl]propanoate

synonyms: – **octadecyl 3-(3,5-di-*tert*-butyl-4-hydroxyphenyl)propionate,**

– propanoic acid, 3-[3,5-bis(1,1-dimethylethyl)-4-hydroxyphenyl]-, octadecyl ester.

add12. $C_{42}H_{63}O_3P$. [31570-04-4]. PM RN 74240.

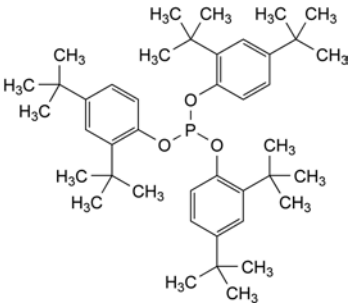

tris[2,4-bis(1,1-dimethylethyl)phenyl] phosphite

synonyms:
- **tris(2,4-di-*tert*-butylphenyl) phosphite,**
- phenol, 2,4-bis(1,1-dimethylethyl)-, phosphite (3:1),
- 2,4-bis(1,1-dimethylethyl)phenyl, phosphite.

add13. $C_{48}H_{69}N_3O_6$. [27676-62-6]. PM RN 95360.

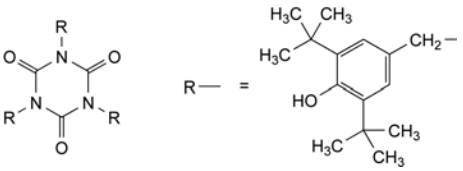

1,3,5-tris[3,5-bis(1,1-dimethylethyl)-4-hydroxybenzyl]-1,3,5-triazine-2,4,6(1*H*,3*H*,5*H*)-trione

synonyms:
- **1,3,5-tris(3,5-di-*tert*-butyl-4-hydroxybenzyl)-*s*-triazine-2,4,6(1*H*,3*H*,5*H*)-trione,**
- 1,3,5-triazine-2,4,6(1*H*,3*H*,5*H*)-trione, 1,3,5-tris[[3,5-bis(1,1-dimethylethyl)-4-hydroxyphenyl]methyl]-.

add14. $C_{41}H_{82}O_6P_2$. [3806-34-6]. PM RN 50080.

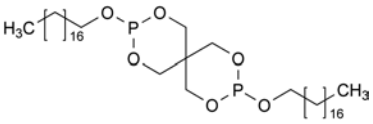

3,9-bis(octadecyloxy)-2,4,8,10-tetraoxa-3,9-diphospha-spiro[5.5]undecane

synonyms:
- **2,2′-bis(octadecyloxy)-5,5′-spirobi[1,3,2-dioxaphosphinane],**
- 2,4,8,10-tetraoxa-3,9-diphosphaspiro[5.5]undecane, 3,9-bis(octadecyloxy)-.

add15. $C_{36}H_{74}S_2$. [2500-88-1]. PM RN 49840.

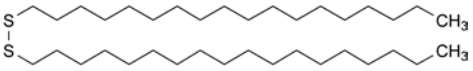

1,1′-disulfanediyldioctadecane

synonyms:
- **dioctadecyl disulfide,**
- octadecane, 1,1′-dithio-.

add16. $C_{30}H_{58}O_4S$. [123-28-4]. PM RN 93120.

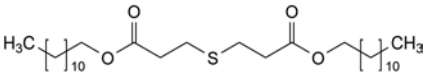

didodecyl 3,3′-sulfanediyldipropanoate

synonyms:
- **didodecyl 3,3′-thiodipropionate,**
- didodecyl 3,3′-sulfanediyldipropanoate,
- propanoic acid, 3,3′-thiobis-, dodecyl diester,
- lauryl thiodipropionate.

add17. $C_{42}H_{82}O_4S$. [693-36-7]. PM RN 93280.

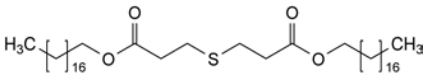

dioctadecyl 3,3′-sulfanediyldipropanoate

synonyms:
- **dioctadecyl 3,3′-thiodipropionate,**
- dioctadecyl 3,3′-sulfanediyldipropanoate,
- propanoic acid, 3,3′-thiobis-, octadecyl diester,
- stearyl thiodipropionate.

add18. [119345-01-6]. PM RN 92560.

mixture of seven products corresponding to reaction product of di-*tert*-butyl phosphonite with biphosphorous trichloride, reaction products with biphenyl and 2,4-bis(1,1-dimethylethyl)phenol:

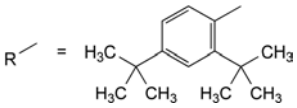

component I

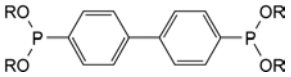

2,4-bis(1,1-dimethylethyl)phenyl biphenyl-4,4′-diyldiphosphonite

component II

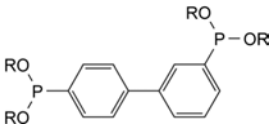

2,4-bis(1,1-dimethylethyl)phenyl biphenyl-3,4′-diyldiphosphonite

component III

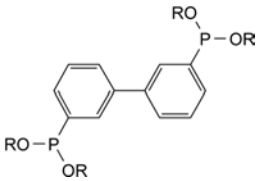

2,4-bis(1,1-dimethylethyl)phenyl biphenyl-3,3′-diyldiphosphonite

component IV

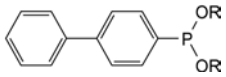

2,4-bis(1,1-dimethylethyl)phenyl biphenyl-4-ylphosphonite

component V

2,4-bis(1,1-dimethylethyl)phenyl phosphite

component VI

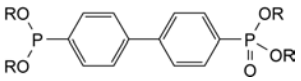

2,4-bis(1,1-dimethylethyl)phenyl 4′-[bis[2,4-bis(1,1-dimethylethyl)phenoxy]phosphanyl]biphenyl-4-ylphosphonate

component VII

R-OH: 2,4-bis(1,1-dimethylethyl)phenol

add19. $C_{18}H_{36}O_2$. [57-11-4]. PM RN 24550.

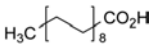

octadecanoic acid

synonyms: – **stearic acid,**
– octadecanoic acid.

add20. $C_{18}H_{35}NO$. [301-02-0]. PM RN 68960.

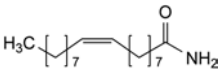

(9*Z*)-octadec-9-enamide

synonyms: – **oleamide,**
– 9-octadecenamide, (*Z*)-,
– 9-*cis*-oleamide.

add21. $C_{22}H_{43}NO$. [112-84-5]. PM RN 52720.

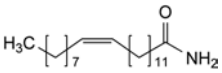

(13*Z*)-docos-13-enamide

synonyms: – **erucamide,**
– 13-docosenamide, (*Z*)-,
– 13-*cis*-docosenamide.

add22. [65447-77-0]. PM RN 60800.

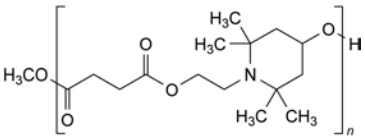

copolymer of dimethyl butanedioate and 1-(2-hydroxyethyl)-2,2,6,6-tetramethylpiperidin-4-ol

synonyms: – **copolymer of dimethyl succinate and (4-hydroxy-2,2,6,6-tetramethylpiperidin-1-yl)ethanol.**

add23.

mixture of component I and about 27 per cent of component II

component I [26401-97-8]

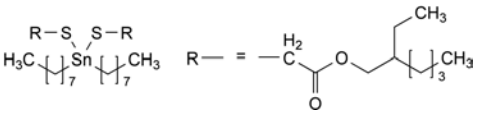

bis[(2*RS*)-2-ethylhexyl] 2,2′-[(dioctylstannanetriyl)bis-(sulfanediyl)]diacetate

synonyms: – **di(isooctyl) 2,2′-[(dioctylstannylene)-bis(thio)]diacetate,**
– bis(isooctyloxycarbonylmethylthio)-dioctylstannane.

component II [26401-86-5]

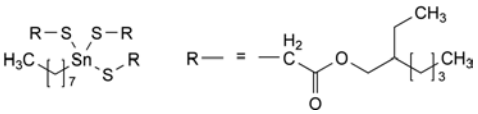

tris[(2*RS*)-2-ethylhexyl] 2,2′,2″-[(octylstannanetriyl)tris-(sulfanediyl)]triacetate

synonyms: – **tri(isooctyl) 2,2′,2″-[(monooctylstannylidyne)tris(thio)]triacetate,**
– 2,2′,2″-[(octylstannylidyne)tris(thio)]triacetic acid, triisooctyl ester.

01/2008:30114
corrected 7.5

3.1.14. MATERIALS BASED ON PLASTICISED POLY(VINYL CHLORIDE) FOR CONTAINERS FOR AQUEOUS SOLUTIONS FOR INTRAVENOUS INFUSION

DEFINITION

Materials based on plasticised poly(vinyl chloride) contain not less than 55 per cent of poly(vinyl chloride) and contain various additives, in addition to the high-molecular-mass polymer obtained by polymerisation of vinyl chloride.

Materials based on plasticised poly(vinyl chloride) for containers for aqueous solutions for intravenous infusion are defined by the nature and the proportions of the substances used in their manufacture.

PRODUCTION

Materials based on plasticised poly(vinyl chloride) are produced by polymerisation methods which guarantee a residual vinyl chloride content of less than 1 ppm. The production method used is validated in order to demonstrate that the product complies with the following test.

Vinyl chloride. Head space gas chromatography (*2.2.28*).

Internal standard solution. Using a microsyringe, inject 10 µL of *ether R* into 20.0 mL of *dimethylacetamide R*, immersing the tip of the needle in the solvent. Immediately before use, dilute the solution to 1000 times its volume with *dimethylacetamide R*.

Test solution. Place 1.000 g of the material to be examined in a 50 mL vial and add 10.0 mL of the internal standard solution. Close the vial and secure the stopper. Shake, avoiding contact between the stopper and the liquid. Place the vial in a water-bath at 60 ± 1 °C for 2 h.

Vinyl chloride primary solution. Prepare in a fume cupboard. Place 50.0 mL of *dimethylacetamide R* in a 50 mL vial, stopper the vial, secure the stopper and weigh to the nearest 0.1 mg. Fill a 50 mL polyethylene or polypropylene syringe with gaseous *vinyl chloride R*, allow the gas to remain in contact with the syringe for about 3 min, empty the syringe and fill again with 50 mL of gaseous *vinyl chloride R*. Fit a hypodermic needle to the syringe and reduce the volume of gas in the syringe from 50 mL to 25 mL. Inject the remaining 25 mL of vinyl chloride slowly into the vial shaking gently and avoiding contact between the liquid and the needle. Weigh the vial again; the increase in mass is about 60 mg (1 µL of the solution thus obtained contains about 1.2 µg of vinyl chloride). Allow to stand for 2 h. Keep the primary solution in a refrigerator.

Vinyl chloride standard solution: vinyl chloride primary solution, *dimethylacetamide R* (1:3 *V/V*).

Reference solutions. Place 10.0 mL of the internal standard solution in each of six 50 mL vials. Close the vials and secure the stoppers. Inject 1 µL, 2 µL, 3 µL, 5 µL and 10 µL, respectively, of the vinyl chloride standard solution into 5 of the vials. The 6 solutions thus obtained contain, respectively, 0 µg, about 0.3 µg, 0.6 µg, 0.9 µg, 1.5 µg and 3 µg of vinyl chloride. Shake, avoiding contact between the stopper and the liquid. Place the vials in a water-bath at 60 ± 1 °C for 2 h.

Column:
- *material*: stainless steel;
- *size*: *l* = 3 m, Ø = 3 mm;
- *stationary phase*: *silanised diatomaceous earth for gas chromatography R* impregnated with 5 per cent *m/m* of *dimethylstearamide R* and 5 per cent *m/m* of *macrogol 400 R*.

Carrier gas: *nitrogen for chromatography R*.

Flow rate: 30 mL/min.

Temperature:
- *column*: 45 °C;
- *injection port*: 100 °C;
- *detector*: 150 °C.

Detection: flame ionisation.

Injection: 1 mL of the head-space.

Limit:
- *vinyl chloride*: maximum 1 ppm.

Additives

A certain number of additives is added to the polymers to optimise their chemical, physical and mechanical properties in order to adapt them for the intended use. All these additives are chosen from the following list which specifies for each product the maximum allowable content:
- di(2-ethylhexyl)phthalate (plastic additive 01): maximum 40 per cent;
- zinc octanoate (zinc 2-ethylhexanoate) (plastic additive 02): maximum 1 per cent;
- calcium stearate or zinc stearate: maximum 1 per cent or 1 per cent of a mixture of the two;
- *N,N'*-diacylethylenediamines (plastic additive 03): maximum 1 per cent;
- maximum 10 per cent of one of the following epoxidised oils or 10 per cent of a mixture of the two:
  - epoxidised soya oil (plastic additive 04) of which the oxiran oxygen content is 6 per cent to 8 per cent and the iodine value is not greater than 6;
  - epoxidised linseed oil (plastic additive 05) of which the oxiran oxygen content is not greater than 10 per cent and the iodine value is not greater than 7.

When colouring materials are added, ultramarine blue is used. Other inorganic pigments may be added, provided the safety of the material is demonstrated to the satisfaction of the competent authority. Very low amounts of antioxidants added to the vinyl chloride monomer used may be detected in the polymer.

The supplier of the material must be able to demonstrate that the qualitative and quantitative composition of the type sample is satisfactory for each production batch.

CHARACTERS

Colourless or pale yellow material in the form of powder, beads, granules or, after transformation, translucent sheets of varying thicknesses, with a slight odour. On combustion it gives off dense, black smoke.

IDENTIFICATION

If necessary, before use, cut the samples of the material to be examined into pieces of maximum dimension on a side of not greater than 1 cm.

To 2.0 g of the material to be examined add 200 mL of *peroxide-free ether R* and heat under a reflux condenser for 8 h. Separate the residue B and the solution A by filtration.

Evaporate solution A to dryness under reduced pressure in a water-bath at 30 °C. Dissolve the residue in 10 mL of *toluene R* (solution A1). Dissolve the residue B in 60 mL of *ethylene chloride R*, heating on a water-bath under a reflux condenser. Filter. Add the obtained solution dropwise and with vigorous shaking to 600 mL of *heptane R* heated almost to boiling. Separate by hot filtration the coagulum B1 and the organic solution. Allow the latter to cool; separate the precipitate B2 that forms and filter through a tared sintered-glass filter (40) (*2.1.2*).

A. Infrared absorption spectrophotometry (*2.2.24*).

   Preparation. Dissolve the coagulum B1 in 30 mL of *tetrahydrofuran R* and add, in small volumes with shaking, 40 mL of *anhydrous ethanol R*. Separate the precipitate B3 by filtration and dry *in vacuo* at a temperature not exceeding 50 °C over *diphosphorus pentoxide R*. Dissolve a few milligrams of precipitate B3 in 1 mL of *tetrahydrofuran R*, place a few drops of the solution obtained on a sodium chloride plate and evaporate to dryness in an oven at 100-105 °C.

   Comparison: *poly(vinyl chloride) CRS*.

B. Infrared absorption spectrophotometry (*2.2.24*).

   Examine the residue C obtained in the test for plastic additives 01, 04 and 05.

   Comparison: *plastic additive 01 CRS*.

TESTS

If necessary, before use, cut the samples of the material to be examined into pieces of maximum dimension on a side of not greater than 1 cm.

Solution S1. Place 5.0 g in a combustion flask. Add 30 mL of *sulfuric acid R* and heat until a black, syrupy mass is obtained. Cool and add carefully 10 mL of *strong hydrogen peroxide solution R*. Heat gently. Allow to cool and add 1 mL of *strong hydrogen peroxide solution R*; repeat by alternating evaporation and addition of strong hydrogen peroxide solution until a colourless liquid is obtained. Reduce the volume to about 10 mL. Cool and dilute to 50.0 mL with *water R*.

Solution S2. Place 25 g in a borosilicate-glass flask. Add 500 mL of *water for injections R* and cover the neck of the flask with aluminium foil or a borosilicate-glass beaker. Heat in an autoclave at 121 ± 2 °C for 20 min. Allow to cool and decant the solution.

Appearance of solution S2. Solution S2 is clear (*2.2.1*) and colourless (*2.2.2, Method II*).

Acidity or alkalinity. To 100 mL of solution S2, add 0.15 mL of *BRP indicator solution R*. Not more than 1.5 mL of *0.01 M sodium hydroxide* is required to change the colour of the indicator to blue. To 100 mL of solution S2 add 0.2 mL of *methyl orange solution R*. Not more than 1.0 mL of *0.01 M hydrochloric acid* is required to initiate the colour change of the indicator from yellow to orange.

Absorbance (*2.2.25*). Evaporate 100.0 mL of solution S2 to dryness. Dissolve the residue in 5.0 mL of *hexane R*. From 250 nm to 310 nm the absorbance is not greater than 0.25.

Reducing substances. *Carry out the test within 4 h of preparation of solution S2*. To 20.0 mL of solution S2 add 1 mL of *dilute sulfuric acid R* and 20.0 mL of *0.002 M potassium permanganate*. Boil under a reflux condenser for 3 min and cool immediately. Add 1 g of *potassium iodide R* and titrate immediately with *0.01 M sodium thiosulfate*, using 0.25 mL of *starch solution R* as indicator. Carry out a blank titration using 20 mL of *water for injections R*. The difference between the titration volumes is not more than 2.0 mL.

Primary aromatic amines: maximum 20 ppm.

To 2.5 mL of solution A1 obtained during the identification, add 6 mL of *water R* and 4 mL of *0.1 M hydrochloric acid*. Shake vigorously and discard the upper layer. To the lower layer add 0.4 mL of a freshly prepared 10 g/L solution of *sodium nitrite R*. Mix and allow to stand for 1 min. Add 0.8 mL of a 25 g/L solution of *ammonium sulfamate R*, allow to stand for 1 min and add 2 mL of a 5 g/L solution of *naphthylethylenediamine dihydrochloride R*. After 30 min, any colour in the solution is not more intense than that in a standard prepared at the same time in the same manner using a mixture of 1 mL of a 0.01 g/L solution of *naphthylamine R* in *0.1 M hydrochloric acid*, 5 mL of *water R* and 4 mL of *0.1 M hydrochloric acid* instead of the aqueous layer.

Plastic additives 01, 04 and 05. Thin-layer chromatography (*2.2.27*).

Reference solutions. Prepare 0.1 mg/mL solutions of *plastic additive 01 CRS*, *plastic additive 04 CRS* and *plastic additive 05 CRS*, respectively, in *toluene R*.

Plate: *TLC silica gel GF_{254} plate R*.

Mobile phase: *toluene R*.

Application: 0.5 mL of solution A1 obtained during the identification as a band 30 mm by 3 mm and 5 µL of each reference solution.

Development: over a path of 15 cm.

Drying: in air.

Detection A: examine in ultraviolet light at 254 nm.

Locate the zone corresponding to plastic additive 01 (R_F about 0.4). Remove the area of silica gel corresponding to this zone and shake with 40 mL of *ether R* for 1 min. Filter, rinse with 2 quantities, each of 10 mL of *ether R*, add the rinsings to the filtrate and evaporate to dryness. The residue C weighs not more than 40 mg.

Detection B: expose the plate to iodine vapour for 5 min.

Examine the chromatogram and locate the band corresponding to plastic additives 04 and 05 (R_F = 0). Remove the area of silica gel corresponding to this zone. Similarly remove a corresponding area of silica gel as a blank reference. Separately shake both samples for 15 min with 40 mL of *methanol R*. Filter, rinse with 2 quantities, each of 10 mL of *methanol R*, add the rinsings to the filtrate and evaporate to dryness. The difference between the masses of both residues is not more than 10 mg.

Plastic additive 03. Infrared absorption spectrophotometry (*2.2.24*).

Preparation. Wash precipitate B2 obtained during the identification and contained in the tared sintered-glass filter (40) (*2.1.2*) with *anhydrous ethanol R*. Dry to constant mass over *diphosphorus pentoxide R* and weigh the filter. The residue weighs not more than 20 mg.

Comparison: *plastic additive 03 CRS*.

Barium: maximum 5 ppm.

Inductively coupled plasma-atomic emission spectrometry (*2.2.57*).

Test solution. Ignite 1.0 g of the substance to be examined in a silica crucible. Take up the residue with 10 mL of *hydrochloric acid R* and evaporate to dryness on a water-bath. Take up the residue with 20 mL of *0.1 M hydrochloric acid*.

Reference solution. A solution containing 0.25 ppm of barium prepared by dilution of *barium standard solution (50 ppm Ba) R* with *0.1 M hydrochloric acid*.

Wavelength: use the emission of barium at 455.40 nm, the spectral background being taken at 455.30 nm.

Verify the absence of barium in the hydrochloric acid used.

Cadmium: maximum 0.6 ppm.

Atomic absorption spectrometry (*2.2.23, Method I*).

Test solution. Evaporate 10 mL of solution S1 to dryness. Take up the residue using 5 mL of a 1 per cent *V/V* solution of *hydrochloric acid R*, filter and dilute the filtrate to 10.0 mL with the same acid.

Reference solutions. Prepare the reference solutions using *cadmium standard solution (0.1 per cent Cd) R*, diluting with a 1 per cent *V/V* solution of *hydrochloric acid R*.

Source: cadmium hollow-cathode lamp.

Wavelength: 228.8 nm.

Atomisation device: air-acetylene flame.

Verify the absence of cadmium in the hydrochloric acid used.

Calcium: maximum 0.07 per cent.

Inductively coupled plasma-atomic emission spectrometry (*2.2.57*).

Test solution. Use the test solution prepared for the determination of barium.

Reference solution. A solution containing 50.0 ppm of calcium prepared by dilution of *calcium standard solution (400 ppm Ca) R* with *0.1 M hydrochloric acid*.

Wavelength: use the emission of calcium at 315.89 nm, the spectral background being taken at 315.60 nm.

Verify the absence of calcium in the hydrochloric acid used.

Tin: maximum 20 ppm.

Inductively coupled plasma-atomic emission spectrometry (*2.2.57*).

Test solution. Dilute solution S1 10 times with *water R* immediately before use.

Reference solution. Introduce 2 mL of *tin standard solution (5 ppm Sn) R* into a 50 mL flask containing 5 mL of a 20 per cent *V/V* solution of *sulfuric acid R* and dilute to 50 mL with *water R* immediately before use.

Wavelength: use the emission of tin at 189.99 nm, the spectral background being taken at 190.10 nm.

Verify the absence of tin in the hydrochloric acid used.

Zinc: maximum 0.2 per cent.

Atomic absorption spectrometry (*2.2.23, Method I*).

Test solution. Dilute solution S1 100 times with *0.1 M hydrochloric acid*.

Reference solutions. Prepare the reference solutions using *zinc standard solution (100 ppm Zn) R*, diluting with *0.1 M hydrochloric acid*.

Source: zinc hollow-cathode lamp.

Wavelength: 213.9 nm.

Atomisation device: air-acetylene flame.

Verify the absence of zinc in the hydrochloric acid used.

Heavy metals (*2.4.8*): maximum 50 ppm.

To 10 mL of solution S1 add 0.5 mL of *phenolphthalein solution R* and then *strong sodium hydroxide solution R* until a pale pink colour is obtained. Dilute to 25 mL with *water R*. 12 mL of solution complies with test A. Prepare the reference solution using *lead standard solution (2 ppm Pb) R*.

Water extractable substances: maximum 0.3 per cent.

Evaporate 50.0 mL of solution S2 to dryness on a water-bath and dry at 100-105 °C until constant mass. Carry out a blank titration with 50.0 mL of *water for injections R*. The residue weighs not more than 7.5 mg taking into account the blank test.

ASSAY

Carry out the oxygen-flask method (*2.5.10*) using 50.0 mg. Absorb the combustion products in 20 mL of *1 M sodium hydroxide*. To the solution obtained add 1 mL of *dibutyl phthalate R*, 2.5 mL of *nitric acid R*, 5 mL of *ferric ammonium sulfate solution R2* and 10.0 mL of *0.1 M silver nitrate*. Titrate with *0.05 M ammonium thiocyanate* until a reddish-yellow colour is obtained. Carry out a blank test.

1 mL of *0.1 M silver nitrate* is equivalent to 6.25 mg of poly(vinyl chloride).

01/2008:30115
corrected 7.5

3.1.15. POLYETHYLENE TEREPHTHALATE FOR CONTAINERS FOR PREPARATIONS NOT FOR PARENTERAL USE

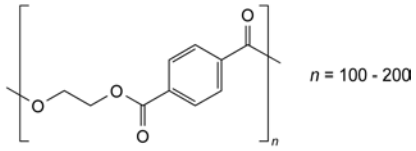

DEFINITION

Polyethylene terephthalate is obtained from the polymerisation of terephthalic acid or dimethyl terephthalate with ethylene glycol. Isophthalic acid, dimethyl isophthalate, 1,4-bis(hydroxymethyl)cyclohexane

(cyclohexane-1,4-dimethanol) or diethylene glycol may be used in the polymerisation. It may contain not more than 0.5 per cent of silica or silicates and colouring matter approved by the competent authority.

PRODUCTION

The manufacturing process is validated to demonstrate that the residual acetaldehyde content is not greater than 10 ppm in the granules.

CHARACTERS

Appearance: clear or opaque granules.

Solubility: practically insoluble in water, in ethanol (96 per cent) and in methylene chloride. It is hydrolysed by strong bases.

IDENTIFICATION

A. Place 0.10 g of the material to be examined into a borosilicate glass flask with a ground-glass neck. Add 25 mL of a 200 g/L solution of *potassium hydroxide R* in a 50 per cent *V/V* solution of *anhydrous ethanol R*. Reflux for 30 min. Allow to cool and dilute to 100 mL with *water R*. Filter if necessary. Dilute 1.0 mL of the filtrate to 100 mL with *water R*. Examined between 210 nm and 330 nm (*2.2.25*), the solution shows an absorption maximum at 240 nm.

B. Dissolve 0.05 g of the material to be examined in 2 mL of *1,1,1,3,3,3-hexafluoropropan-2-ol R*. Apply to a glass plate on a water-bath in a fume cupboard several drops of the solution to produce a film of about 15 mm by 15 mm. Allow the solvent to evaporate and remove the film using a stream of water and a scraper. Dry in an oven at 100-105 °C for 1-2 h. Examine the film by infrared absorption spectrophotometry (*2.2.24*). The spectrum of the material to be examined shows maxima in particular at 1725 cm^{-1}, 1410 cm^{-1}, 1265 cm^{-1}, 1120 cm^{-1}, 1100 cm^{-1}, 1020 cm^{-1}, 875 cm^{-1}, 725 cm^{-1}. The spectrum obtained, in addition, is identical to that of the material selected for the type sample.

TESTS

If necessary, cut out samples for testing to a maximum size of 1 cm per side.

Solution S1. Place 10.0 g of the material to be examined in a borosilicate glass flask with a ground-glass neck. Add 200 mL of *water R* and heat at 50 °C for 5 h. Allow to cool and decant the solution. *Use solution S1 within 4 h of its preparation.*

Solution S2. Place 10 g of the material to be examined in a borosilicate glass flask with a ground-glass neck. Add 100 mL of *ethanol (96 per cent) R* and heat at 50 °C for 5 h. Allow to cool and decant the solution. *Use solution S2 within 4 h of its preparation.*

Solution S3. Place 20 g of the material to be examined in a borosilicate glass flask with a ground-glass neck. Add 50 mL of *0.1 M hydrochloric acid* and heat at 50 °C for 5 h. Allow to cool and decant the solution. *Use solution S3 within 4 h of its preparation.*

Solution S4. Place 20 g of the material to be examined into a borosilicate glass flask with a ground-glass neck. Add 50 mL of *0.01 M sodium hydroxide* and heat at 50 °C for 5 h. Allow to cool and decant. *Use solution S4 within 4 h of its preparation.*

Appearance of solution S1. Solution S1 is clear (*2.2.1*).

Appearance of solution S2. Solution S2 is clear (*2.2.1*) and colourless (*2.2.2, Method II*).

Acidity or alkalinity. To 50 mL of solution S1 add 0.15 mL of *BRP indicator solution R*. The solution turns yellow. Not more than 0.5 mL of *0.01 M sodium hydroxide* is required to change the colour of the indicator to blue. To another 50 mL of solution S1 add 0.2 mL of *methyl orange solution R*. The solution turns yellow. Not more than 0.5 mL of *0.01 M hydrochloric acid* is required to reach the beginning of the colour change of the indicator to orange.

Absorbance of solution S1 (*2.2.25*): maximum 0.20 between 220 nm and 340 nm. In addition, for coloured polyethylene terephthalate: maximum 0.05 between 400 nm to 800 nm.

Absorbance of solution S2 (*2.2.25*): maximum 0.05 between 400 nm and 800 nm.

Reducing substances. Add 2 mL of *0.5 M sulfuric acid* and 20.0 mL of *0.002 M potassium permanganate* to 20.0 mL of solution S1. Boil for 3 min. Cool immediately to ambient temperature. Add 1 g of *potassium iodide R*, 0.25 mL of *starch solution R* as indicator and titrate with *0.01 M sodium thiosulfate*. Perform a blank titration using 20.0 mL of *water R*. The difference in volume used in the 2 titrations is not greater than 0.5 mL.

Substances soluble in dioxan: maximum 3 per cent.

Place 2 g of the material to be examined in a borosilicate glass flask with a ground-glass neck. Add 20 mL of *dioxan R* and heat under reflux for 2 h. Evaporate 10 mL of the solution to dryness on a water-bath and then dry the residue at 100-105 °C. The residue weighs a maximum of 30 mg.

Extractable aluminium: maximum 1 ppm.

Inductively coupled plasma-atomic emission spectrometry (*2.2.57*).

Test solution. Solution S3.

Reference solutions. Prepare the reference solutions using *aluminium standard solution (200 ppm Al) R*, diluting with *0.1 M hydrochloric acid*.

Wavelength: 396.15 nm, the spectral background being taken at 396.25 nm.

Verify the absence of aluminium in the *0.1 M hydrochloric acid* used.

Extractable antimony: maximum 1 ppm.

Inductively coupled plasma-atomic emission spectrometry (*2.2.57*).

Test solution. Solution S4.

Reference solutions. Prepare the reference solutions using *antimony standard solution (100 ppm Sb) R*, diluting with *0.01 M sodium hydroxide*.

Wavelength: 231.15 nm or 217.58 nm, the spectral background being taken at 231.05 nm.

Extractable barium: maximum 1 ppm.

Inductively coupled plasma-atomic emission spectrometry (*2.2.57*).

Test solution. Solution S3.

Reference solutions. Prepare the reference solutions using *barium standard solution (50 ppm Ba) R*, diluting with *0.1 M hydrochloric acid*.

Wavelength: 455.40 nm, the spectral background being taken at 455.30 nm.

Verify the absence of barium in the *0.1 M hydrochloric acid* used.

Extractable cobalt: maximum 1 ppm.

Inductively coupled plasma-atomic emission spectrometry (*2.2.57*).

Test solution. Solution S3.

Reference solutions. Prepare the reference solutions using *cobalt standard solution (100 ppm Co) R*, diluting with *0.1 M hydrochloric acid*.

Wavelength: 228.62 nm, the spectral background being taken at 228.50 nm.

Verify the absence of cobalt in the *0.1 M hydrochloric acid* used.

Extractable germanium: maximum 1 ppm.

Inductively coupled plasma-atomic emission spectrometry (*2.2.57*).

Test solution. Solution S4.

Reference solutions. Prepare the reference solutions using *germanium standard solution (100 ppm Ge) R*, diluting with *0.01 M sodium hydroxide*.

Wavelength: 206.87 nm or 265.12 nm, the spectral background being taken at 206.75 nm.

Extractable manganese: maximum 1 ppm.

Inductively coupled plasma-atomic emission spectrometry (*2.2.57*).

Test solution. Solution S3.

Reference solutions. Prepare the reference solutions using *manganese standard solution (100 ppm Mn) R*, diluting with *0.1 M hydrochloric acid*.

Wavelength: 257.61 nm, the spectral background being taken at 257.50 nm.

Verify the absence of manganese in the *0.1 M hydrochloric acid* used.

Extractable titanium: maximum 1 ppm.

Inductively coupled plasma-atomic emission spectrometry (*2.2.57*).

Test solution. Solution S3.

Reference solutions. Prepare the reference solutions using *titanium standard solution (100 ppm Ti) R*, diluting with *0.1 M hydrochloric acid*.

Wavelength: 323.45 nm or 334.94 nm, the spectral background being taken at 323.35 nm.

Verify the absence of titanium in the 0.1M hydrochloric acid used.

Extractable zinc: maximum 1 ppm.

Inductively coupled plasma-atomic emission spectrometry (*2.2.57*).

Test solution. Solution S3.

Reference solutions. Prepare the reference solutions using *zinc standard solution (100 ppm Zn) R*, diluting with *0.1 M hydrochloric acid*.

Wavelength: 213.86 nm, the spectral background being taken at 213.75 nm.

Verify the absence of zinc in the *0.1 M hydrochloric acid* used.

Sulfated ash (*2.4.14*): maximum 0.5 per cent determined on 1.0 g.

01/2008:30200

3.2. CONTAINERS

A container for pharmaceutical use is an article that contains or is intended to contain a product and is, or may be, in direct contact with it. The closure is a part of the container.

The container (see General Notices section 1.3) is so designed that the contents may be removed in a manner appropriate to the intended use of the preparation. It provides a varying degree of protection depending on the nature of the product and the hazards of the environment, and minimises the loss of constituents. The container does not interact physically or chemically with the contents in a way that alters their quality beyond the limits tolerated by official requirements.

Single-dose container. A single-dose container holds a quantity of the preparation intended for total or partial use on 1 occasion only.

Multidose container. A multidose container holds a quantity of the preparation suitable for 2 or more doses.

Well-closed container. A well-closed container protects the contents from contamination with extraneous solids and liquids and from loss of contents under ordinary conditions of handling, storage and transport.

Airtight container. An airtight container is impermeable to solids, liquids and gases under ordinary conditions of handling, storage and transport. If the container is intended to be opened on more than 1 occasion, it must be so designed that it remains airtight after re-closure.

Sealed container. A sealed container is a container closed by fusion of the material of the container.

Tamper-proof container. A tamper-proof container is a closed container fitted with a device that reveals irreversibly whether the container has been opened.

Child-proof container. A container that is fitted with a closure that prevents opening by children.

07/2010:30201

3.2.1. GLASS CONTAINERS FOR PHARMACEUTICAL USE

Glass containers for pharmaceutical use are glass articles intended to come into direct contact with pharmaceutical preparations.

Colourless glass is highly transparent in the visible spectrum.

Coloured glass is obtained by the addition of small amounts of metal oxides, chosen according to the desired spectral absorbance.

Neutral glass is a borosilicate glass containing significant amounts of boric oxide, aluminium oxide alkali and/or alkaline earth oxides. Due to its composition neutral glass has a high hydrolytic resistance and a high thermal shock resistance.

Soda-lime-silica glass is a silica glass containing alkali metal oxides, mainly sodium oxide and alkaline earth oxides, mainly calcium oxide. Due to its composition soda-lime-silica glass has only a moderate hydrolytic resistance.

The hydrolytic stability of glass containers for pharmaceutical use is expressed by the resistance to the release of soluble mineral substances into water under the prescribed conditions of contact between the inner surface of the container or glass grains and water. The hydrolytic resistance is evaluated by titrating released alkali. According to their hydrolytic resistance, glass containers are classified as follows:

- Type I glass containers: neutral glass, with a high hydrolytic resistance due to the chemical composition of the glass itself;
- Type II glass containers: usually of soda-lime-silica glass with a high hydrolytic resistance resulting from suitable treatment of the surface;
- Type III glass containers: usually of soda-lime-silica glass with only moderate hydrolytic resistance.

The following italicised statements constitute general recommendations concerning the type of glass container that may be used for different types of pharmaceutical preparations. The manufacturer of a pharmaceutical product is responsible for ensuring the suitability of the chosen container.

Type I glass containers are suitable for most preparations whether or not for parenteral administration.

Type II glass containers are suitable for most acidic and neutral, aqueous preparations whether or not for parenteral administration.

Type III glass containers are in general suitable for non-aqueous preparations for parenteral administration, for powders for parenteral administration (except for freeze-dried preparations) and for preparations not for parenteral administration.

Glass containers with a hydrolytic resistance higher than that recommended above for a particular type of preparation may generally also be used.

The container chosen for a given preparation shall be such that the glass material does not release substances in quantities sufficient to affect the stability of the preparation or to present a risk of toxicity. In justified cases, it may be necessary to have detailed information on the glass composition, so that the potential hazards can be assessed.

Preparations for parenteral administration are normally presented in colourless glass, but coloured glass may be used for substances known to be light-sensitive. Colourless or coloured glass is used for the other pharmaceutical preparations. It is recommended that all glass containers for liquid preparations and for powders for parenteral administration permit the visual inspection of the contents.

The inner surface of glass containers may be specially treated to improve hydrolytic resistance, to confer water-repellancy, etc. The outer surface may also be treated, for example to reduce friction and to improve resistance to abrasion. The outer treatment is such that it does not contaminate the inner surface of the container.

Except for type I glass containers, glass containers for pharmaceutical preparations are not to be re-used. Containers for human blood and blood components must not be re-used.

Glass containers for pharmaceutical use comply with the relevant test or tests for hydrolytic resistance. When glass containers have non-glass components, the tests apply only to the glass part of the container.

To define the quality of glass containers according to the intended use, one or more of the following tests are necessary.

Tests for hydrolytic resistance are carried out to define the type of glass (I, II or III) and to control its hydrolytic resistance.

In addition, containers for aqueous parenteral preparations are tested for arsenic release and coloured glass containers are tested for spectral transmission.

HYDROLYTIC RESISTANCE

Table 3.2.1.-1. – *Types of glass*

Type of container	Test to be performed
Type I and type II glass containers (to distinguish from type III glass containers)	Test A (surface test)
Type I glass containers (to distinguish from type II and type III glass containers)	Test B (glass grains test) or test C (etching test)
Type I and type II glass containers where it is necessary to determine whether the high hydrolytic resistance is due to the chemical composition or to the surface treatment	Tests A and B, or tests A and C

The test is carried out by titration of the extract solutions obtained under the conditions described for tests A, B and C.

EQUIPMENT

- an autoclave capable of maintaining a temperature of 121 °C ± 1 °C, equipped with a thermometer or a calibrated thermocouple recorder, a pressure gauge, a vent cock and a tray, of sufficient capacity to accommodate above the water level the number of containers needed to carry out the test; *clean the autoclave vessel and all ancillary equipment thoroughly before use with water R;*
- burettes with a suitable capacity;
- one-mark volumetric flasks, with a capacity of 1000 mL;
- pipettes and beakers;
- conical flasks with a capacity of 100 mL and 250 mL;
- a water-bath;
- a metal foil (e.g. aluminium, stainless steel).

Flasks and beakers shall have been already used for the test or have been filled with *water R* and kept in an autoclave at 121 °C at least for 1 h before being used.

DETERMINATION OF THE FILLING VOLUME

The filling volume is the volume of water to be filled in the container for the purpose of the test. For vials and bottles the filling volume is 90 per cent of the brimful capacity. For ampoules it is the volume up to the height of the shoulder.

Vials and bottles. Select, at random, 6 containers from the sample lot, or 3 if their capacity exceeds 100 mL, and remove any dirt or debris. Weigh the empty containers with an accuracy of 0.1 g. Place the containers on a horizontal surface and fill them with *distilled water R* until about the rim edge, avoiding overflow and introduction of air bubbles. Adjust the liquid levels to the brimful line. Weigh the filled containers to obtain the mass of the water expressed to 2 decimal places for containers having a nominal volume less or equal to 30 mL, and expressed to 1 decimal place for containers having a nominal volume greater than 30 mL. Calculate the mean value of the brimful capacity in millilitres and multiply it by 0.9. This volume, expressed to 1 decimal place, is the filling volume for the particular container lot.

Ampoules. Place at least 6 dry ampoules on a flat, horizontal surface and fill them with *distilled water R* from a burette, until the water reaches point A, where the body of the ampoule declines to the shoulder (see Figure 3.2.1.-1). Read the capacities (expressed to 2 decimal places) and calculate the mean value. This volume, expressed to 1 decimal place, is the filling volume for the particular ampoule lot. The filling volume may also be determined by weighing.

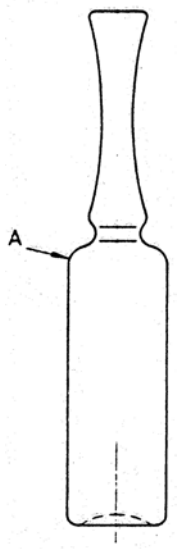

Figure 3.2.1.-1. – *Filling volume of ampoules (up to point A)*

TEST A. HYDROLYTIC RESISTANCE OF THE INNER SURFACES OF GLASS CONTAINERS (SURFACE TEST)

The determination is carried out on unused containers. The volumes of the test liquid necessary for the final determination are indicated in Table 3.2.1.-2.

Table 3.2.1.-2. – *Volume of test liquid and number of titrations*

Filling volume (mL)	Volume of test liquid for one titration (mL)	Number of titrations
Up to 3	25.0	1
Above 3 and up to 30	50.0	2
Above 30 and up to 100	100.0	2
Above 100	100.0	3

Cleaning. Remove any debris or dust. Shortly before the test, rinse each container carefully at least twice with *water R* and allow to stand. Immediately before testing empty the containers, rinse once with *water R* then with *water R1* and allow to drain. Complete the cleaning procedure from the first rinsing in not less than 20 min and not more than 25 min.

Heat closed ampoules on a water-bath or in an air-oven at about 50 °C for approximately 2 min before opening; do not rinse before testing.

Filling and heating. The containers are filled with *water R1* up to the filling volume. Containers in the form of cartridges or prefilled syringes are closed in a suitable manner with material that does not interfere with the test. Each container including ampoules shall be loosely capped with an inert material such as a dish of neutral glass or aluminium foil previously rinsed with *water R*. Place the containers on the tray of the autoclave. Place the tray in the autoclave containing a quantity of *water R* such that the tray remains clear of the water. Close the autoclave and carry out the following operations:

- heat the autoclave to 100 °C and allow the steam to issue from the vent cock for 10 min;
- close the ventcock and raise the temperature from 100 °C to 121 °C at a rate of 1 °C per min;
- maintain the temperature at 121 ± 1 °C for 60 ± 1 min;
- lower the temperature from 121 °C to 100 °C at a rate of 0.5 °C per min, venting to prevent vacuum;
- do not open the autoclave before it has cooled down to 95 °C;

- remove the containers from the autoclave using normal precautions, place them in a water-bath at 80 °C, and run cold tap water, taking care that the water does not contact the loose foil caps to avoid contamination of the extraction solution;
- cooling time does not exceed 30 min.

The extraction solutions are analysed by titration according to the method described below.

Method. Carry out the titration within 1 h of removal of the containers from the autoclave. Combine the liquids obtained from the containers and mix. Introduce the prescribed volume (Table 3.2.1.-2) into a conical flask. Place the same volume of *water R1* into a second similar flask as a blank. Add to each flask 0.05 mL of *methyl red solution R* for each 25 mL of liquid. Titrate the blank with *0.01 M hydrochloric acid*. Titrate the test liquid with the same acid until the colour of the resulting solution is the same as that obtained for the blank. Subtract the value found for the blank titration from that found for the test liquid and express the results in millilitres of *0.01 M hydrochloric acid* per 100 mL. Express titration values of less than 1.0 mL to 2 decimal places and titration values of more than or equal to 1.0 mL to 1 decimal place.

Limits. The results, or the average of the results if more than one titration is performed, is not greater than the values stated in Table 3.2.1.-3.

Table 3.2.1.-3. – *Limit values in the test for surface hydrolytic resistance*

	Maximum volume of 0.01 M HCl per 100 mL of test liquid (mL)	
	Glass containers	
Filling volume (mL)	**Types I and II**	**Type III**
Up to 1	2.0	20.0
Above 1 and up to 2	1.8	17.6
Above 2 and up to 5	1.3	13.2
Above 5 and up to 10	1.0	10.2
Above 10 and up to 20	0.80	8.1
Above 20 and up to 50	0.60	6.1
Above 50 and up to 100	0.50	4.8
Above 100 and up to 200	0.40	3.8
Above 200 and up to 500	0.30	2.9
Above 500	0.20	2.2

TEST B. HYDROLYTIC RESISTANCE OF GLASS GRAINS (GLASS GRAINS TEST)

Check that the articles as received have been annealed to a commercially acceptable quality.

The test may be performed on the canes used for the manufacture of tubing glass containers or on the containers.

Equipment

- a mortar, pestle (see Figure 3.2.1.-2) and hammer in tempered, magnetic steel;
- a set of 3 square-mesh sieves of stainless steel, mounted on frames of the same material and consisting of the following:
  (a) sieve no. 710;
  (b) sieve no. 425;
  (c) sieve no. 300;
- a permanent magnet;
- a metal foil (e.g. aluminium, stainless steel);
- a hot-air oven, capable of maintaining a temperature of 140 ± 5 °C;
- a balance, capable of weighing up to 500 g with an accuracy of 0.005 g;
- a desiccator;
- an ultrasonic bath.

Method. Rinse the containers to be tested with *water R* and dry in the oven. Wrap at least 3 of the glass articles in clean paper and crush to produce 2 samples of about 100 g each in pieces not more than 30 mm across. Place 30-40 g of the pieces between 10-30 mm across taken from 1 of the samples in the mortar, insert the pestle and strike it heavily once only with the hammer. Transfer the contents of the mortar, to the coarsest sieve (a) of the set. Repeat the operation until all fragments have been transferred to the sieve. Shake the set of sieves a short time by hand and remove the glass which remains on sieves (a) and (b). Submit these portions to further fracture, repeating the operation until about 10 g of glass remains on sieve (a). Reject this portion and the portion which passes through sieve (c). Reassemble the set of sieves and shake for 5 min. Transfer to a weighing bottle those glass grains which passed through sieve (b) and are retained on sieve (c). Repeat the crushing and sieving procedure with the other glass sample and thus 2 samples of grains, each of which shall be in excess of 10 g, are obtained. Spread each sample on a piece of clean glazed paper and remove any iron particles by passing the magnet over them. Transfer each sample into a beaker for cleaning. Add to the grains in each beaker 30 mL of *acetone R* and scour the grains by suitable means, such as a rubber or plastic-coated glass rod. After scouring the grains, allow to settle and decant as much acetone as possible. Add another 30 mL of *acetone R*, swirl, decant again and add a new portion of *acetone R*.

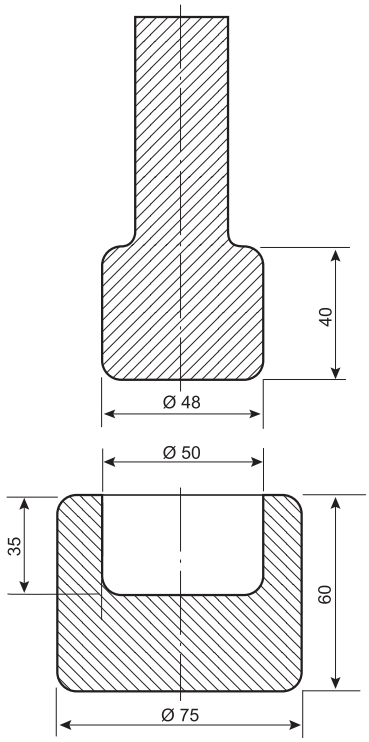

Figure 3.2.1.-2. – *Apparatus for glass grains method (dimensions in millimetres)*

Fill the bath of the ultrasonic vessel with water at room temperature, then place the beaker in the rack and immerse it until the level of the acetone is at the level of the water; apply the ultrasound for 1 min. Swirl the beaker, allow to settle and decant the acetone as completely as possible and then repeat the ultrasonic cleaning operation. If a fine turbidity persists, repeat the ultrasonic cleaning and acetone washing until the solution remains clear. Swirl and decant the acetone then dry the grains, first by putting the beaker on a warm plate to remove excess acetone and then by heating at 140 °C for 20 min in the drying oven. Transfer the dried grains from each beaker into separate weighing bottles, insert the stoppers and

cool in the desiccator. Weigh 10.00 g of the cleaned and dried grains into 2 separate conical flasks. Add 50 mL of *water R1* into each by means of a pipette (test solutions). Pipette 50 mL of *water R1* into a third conical flask which will serve as a blank. Distribute the grains evenly over the flat bases of the flasks by gentle shaking. Close the flasks with neutral glass dishes or aluminium foil rinsed with *water R* or with inverted beakers so that the inner surface of the beakers fit snugly down onto the top rims of the flasks. Place all 3 flasks in the rack in the autoclave containing the water at ambient temperature, and ensure that they are held above the level of the water in the vessel. Carry out the autoclaving procedure in a similar manner to that described under test A, but maintain the temperature of 121 ± 1 °C only for 30 ± 1 min. Do not open the autoclave until it has cooled to 95 °C. Remove the hot samples from the autoclave and cool the flasks in running tap water as soon as possible, avoiding thermal shock. To each of the 3 flasks add 0.05 mL of *methyl red solution R*. Titrate the blank solution immediately with *0.02 M hydrochloric acid* then titrate the test solutions until the colour matches that obtained with the blank solution. Subtract the titration volume for the blank solution from that for the test solutions.

NOTE: where necessary to obtain a sharp end-point, the clear solution is to be decanted into a separate 250 mL flask. Rinse the grains with 3 quantities, each of 15 mL, of water R1 by swirling and add the washings to the main solution. Add 0.05 mL of the methyl red solution R. Titrate and calculate as described below. In this case also add 45 mL of water R1 and 0.05 mL of methyl red solution R to the blank solution.

Calculate the mean value of the results in millilitres of *0.02 M hydrochloric acid* per gram of the sample and if required its equivalent in alkali extracted, calculated as micrograms of sodium oxide per gram of glass grains.

1 mL of *0.02 M hydrochloric acid* is equivalent to 620 µg of sodium oxide.

Repeat the test if the highest and lowest observed values differ by more than 20 per cent.

Limits. Type I glass containers require not more than 0.1 mL of *0.02 M hydrochloric acid* per gram of glass, type II and type III glass containers require not more than 0.85 mL of *0.02 M hydrochloric acid* per gram of glass.

TEST C. TO DETERMINE WHETHER THE CONTAINERS HAVE BEEN SURFACE-TREATED (ETCHING TEST)

When it is necessary to determine if a container has been surface-treated, and/or distinguish between type I and type II glass containers, test C is used in addition to test A. Alternatively, test A and B may be used. Test C may be carried out either on unused samples or on samples previously tested for test A.

Vials and bottles. The volumes of test liquid required are shown in Table 3.2.1.-2.

Rinse the containers twice with *water R* and fill to the brimful point with a mixture of 1 volume of *hydrofluoric acid R* and 9 volumes of *hydrochloric acid R* and allow to stand for 10 min. Empty the containers and rinse carefully 5 times with *water R*. Immediately before the test, rinse once again with *water R*. Submit the containers thus prepared to the same autoclaving and determination procedure as described in test A for surface hydrolytic resistance. If the results are considerably higher than those obtained from the original surfaces (by about a factor of 5 to 10), the samples have been surface-treated.

Ampoules

NOTE: ampoules made from glass tubing are not normally subjected to internal surface treatment because their high chemical resistance is dependent upon the chemical composition of the glass as a material.

Apply the test method as described above for vials and bottles. If the ampoules are not surface-treated, the new values are slightly lower than those obtained in previous tests.

Distinction between type I and type II glass containers

The results obtained in Test C are compared to those obtained in Test A. The interpretation of the result is shown in Table 3.2.1.-4.

Table 3.2.1.-4. – *Distinction between Types I and II glass containers*

Type I	Type II
The values are closely similar to those found in the test for surface hydrolytic resistance for type I glass containers.	The values greatly exceed those found in the test for surface hydrolytic resistance and are similar but not larger than those for type III glass containers.

ARSENIC

The test applies to glass containers for aqueous parenteral preparations.

Hydride generation atomic absorption spectrometry (*2.2.23, Method I*).

Test solution. Use the extract solution obtained from containers of types I and II, after autoclaving at 121 °C for 1 h as described under test A for surface hydrolytic resistance. Transfer 10.0 mL to a 100 mL volumetric flask. Add 10 mL of *hydrochloric acid R* and 5 mL of a 200 g/L solution of *potassium iodide R*. Heat on a water-bath at 80 °C for 20 min, allow to cool and dilute to 100.0 mL with *water R*.

Reference solutions. Prepare the reference solutions using *arsenic standard solution (1 ppm As) R*. Add 10 mL of *hydrochloric acid R* and 5 mL of a 200 g/L solution of *potassium iodide R*. Heat on a water-bath at 80 °C for 20 min, allow to cool and dilute to 100.0 mL with *water R*. The concentration range of the reference solutions is typically 0.005 ppm to 0.015 ppm of As.

Acid reservoir. Hydrochloric acid R.

Reducing reservoir. Sodium tetrahydroborate reducing solution R.

Use a hydride generation device to introduce the test solution into the cuvette of an atomic absorption spectrometer. Establish and standardise instrumental operating conditions according to the manufacturer's instructions, optimise the uptake rate of the peristaltic pump tubings, then connect tubings to the acid reservoir, the reducing reservoir and the test solution.

Source: hollow-cathode lamp.

Wavelength: 193.7 nm.

Atomisation device: air-acetylene flame.

Limit: maximum 0.1 ppm of As.

SPECTRAL TRANSMISSION FOR COLOURED GLASS CONTAINERS

Equipment. A UV-VIS spectrophotometer, equipped with a photodiode detector or equipped with a photomultiplier tube coupled with an integrating sphere.

Preparation of the specimen. Break the glass container or cut it with a circular saw fitted with a wet abrasive wheel, such as a carborundum or a bonded-diamond wheel. Select sections representative of the wall thickness and trim them as suitable for mounting in a spectrophotometer. If the specimen is too small to cover the opening in the specimen holder, mask the uncovered portion with opaque paper or tape, provided that the length of the specimen is greater than that of the slit. Before placing in the holder, wash, dry and wipe the specimen with lens tissue. Mount the specimen with the aid of wax, or by other convenient means, taking care to avoid leaving fingerprints or other marks.

Method. Place the specimen in the spectrophotometer with its cylindrical axis parallel to the slit and in such a way that the light beam is perpendicular to the surface of the section and that the losses due to reflection are at a minimum. Measure

the transmission of the specimen with reference to air in the spectral region of 290-450 nm, continuously or at intervals of 20 nm.

Limits. The observed spectral transmission for coloured glass containers for preparations that are not for parenteral administration does not exceed 10 per cent at any wavelength in the range of 290 nm to 450 nm, irrespective of the type and the capacity of the glass container. The observed spectral transmission in coloured glass containers for parenteral preparations does not exceed the limits given in Table 3.2.1.-5.

Table 3.2.1.-5. – *Limits of spectral transmission for coloured glass containers for parenteral preparations*

	Maximum percentage of spectral transmission at any wavelength between 290 nm and 450 nm	
Nominal volume (mL)	**Flame-sealed containers**	**Containers with closures**
Up to 1	50	25
Above 1 and up to 2	45	20
Above 2 and up to 5	40	15
Above 5 and up to 10	35	13
Above 10 and up to 20	30	12
Above 20	25	10

Annex – test for surface hydrolytic resistance – determination by flame atomic absorption spectrometry (faas)

The surface hydrolytic resistance of glass of types I and II may be determined by analysis of the leaching solution by flame atomic absorption spectrometry. A number of elements that, when present as oxides in glass, contribute to the alkalinity of the solution, are determined and used to express an alkali equivalent. The spectrometric method has the advantage of allowing the use of a much smaller sample of extract so that it can be applied to small individual containers. This enables an evaluation of the uniformity of the containers in a given batch where this is critical. The results of this measurement are not equivalent to those of titrimetry and the 2 methods cannot be considered interchangeable. A correlation between the 2 is dependent on the type of glass and the size and shape of the container. The titrimetric method is the reference method of the Pharmacopoeia; the spectrometric method may be used in justified and authorised cases.

A method suitable for this type of analysis is shown below.

The determination is carried out on unused containers. The number of containers to be examined is indicated in Table 3.2.1.-6.

Table 3.2.1.-6. - *Number of containers to be examined for the spectrometric method*

Filling volume (mL)	Number of containers to be measured separately	Additional containers for preliminary measurements
Up to 2	20	2
Above 2 and up to 5	15	2
Above 5 and up to 30	10	2
Above 30 and up to 100	5	1
Above 100	3	1

Instructions on determination of the filling volume, cleaning of the containers, filling and heating are given above under Hydrolytic resistance and Test A. Hydrolytic resistance of the inner surfaces of glass containers.

SOLUTIONS

Spectrochemical buffer solution. Dissolve 80 g of *caesium chloride R* in about 300 mL of *water R1*, add 10 mL of *6 M hydrochloric acid R* and transfer to a 1000 mL volumetric flask. Dilute to volume with *water R1* and mix.

Stock solutions:

- sodium oxide, $c(Na_2O)$ = 1 mg/mL;
- potassium oxide, $c(K_2O)$ = 1 mg/mL;
- calcium oxide, $c(CaO)$ = 1 mg/mL.

Commercially available stock solutions may also be used.

Standard solutions. Prepare standard solutions by diluting the stock solutions with *water R1* to obtain concentrations suitable for establishing the reference solutions in appropriate manner, e.g. with concentrations of 20 µg/mL of sodium oxide, potassium oxide and calcium oxide, respectively. Commercially available standard solutions may also be used.

Reference solutions. Prepare the reference solutions for establishing the calibration graph (set of calibration solutions) by diluting suitable concentrated standard solutions with *water R1*, so that the normal working ranges of the specific elements are covered, taking into account the instrument used for the measurement. Typical concentration ranges of the reference solutions are:

- for determination by atomic emission spectrometry of sodium oxide and potassium oxide: up to 10 µg/mL;
- for determination by atomic absorption spectrometry of sodium oxide and potassium oxide: up to 3 µg/mL;
- for determination by atomic absorption spectrometry of calcium oxide: up to 7 µg/mL.

Use reference solutions containing 5 per cent *V/V* of the spectrochemical buffer solution.

METHOD

Carry out preliminary measurements of the potassium oxide and calcium oxide concentrations on one of the extraction solutions. If, for one container type, the concentration of potassium oxide is less than 0.2 µg/mL and if the concentration of calcium oxide is less than 0.1 µg/mL, the remaining extraction solutions of this container type need not be analysed for these ions. Aspirate the extraction solution from each sample directly into the flame of the atomic absorption or atomic emission instrument and determine the approximate concentrations of sodium oxide (and potassium oxide and calcium oxide, if present) by reference to calibration graphs produced from the reference solutions of suitable concentration.

FINAL DETERMINATION

If dilution is unnecessary add to each container a volume of the spectrochemical buffer solution equivalent to 5 per cent of the filling volume, mix well and determine sodium oxide, calcium oxide and potassium oxide, if present, by reference to calibration graphs. For the determination of the calcium oxide concentration by flame atomic spectrometry, the nitrous oxide/acetylene flame shall be used.

If dilution is necessary, determine sodium oxide, calcium oxide and potassium oxide, if present, following the procedures as described above. The measuring solutions shall contain 5 per cent *V/V* of the spectrochemical buffer solution. Concentration values less than 1.0 µg/mL are expressed to 2 decimal places, values greater than or equal to 1.0 µg/mL to 1 decimal place. Correct the result for the buffer addition and for dilution, if any.

CALCULATION

Calculate the mean value of the concentration of individual oxides found in each of the samples tested, in micrograms of the oxide per millilitre of the extraction solution and calculate the sum of the individual oxides, expressed as micrograms of sodium oxide per millilitre of the extraction solution using the following mass conversion factors:

- 1 µg of potassium oxide corresponds to 0.658 µg of sodium oxide;
- 1 µg of calcium oxide corresponds to 1.105 µg of sodium oxide.

Limits. For each container tested, the result is not greater than the value given in Table 3.2.1.-7.

Table 3.2.1.-7. – *Limit values in the test for surface hydrolytic resistance by flame atomic absorption spectrometry*

	Maximum values for the concentration of oxides, expressed as sodium oxide (µg/mL)
Filling volume (mL)	**Glass containers**
	Types I and II
Up to 1	5.00
Above 1 and up to 2	4.50
Above 2 and up to 5	3.20
Above 5 and up to 10	2.50
Above 10 and up to 20	2.00
Above 20 and up to 50	1.50
Above 50 and up to 100	1.20
Above 100 and up to 200	1.00
Above 200 and up to 500	0.75
Above 500	0.50

01/2008:30202

3.2.2. PLASTIC CONTAINERS AND CLOSURES FOR PHARMACEUTICAL USE

A plastic container for pharmaceutical use is a plastic article which contains or is intended to contain a pharmaceutical product and is, or may be, in direct contact with it. The closure is a part of the container.

Plastic containers and closures for pharmaceutical use are made of materials in which may be included certain additives; these materials do not include in their composition any substance that can be extracted by the contents in such quantities as to alter the efficacy or the stability of the product or to present a risk of toxicity.

The most commonly used polymers are polyethylene (with and without additives), polypropylene, poly(vinyl chloride), poly(ethylene terephthalate) and poly(ethylene-vinyl acetate).

The nature and amount of the additives are determined by the type of the polymer, the process used to convert the polymer into the container and the intended purpose of the container. Additives may consist of antioxidants, stabilisers, plasticisers, lubricants, colouring matter and impact modifiers. Antistatic agents and mould-release agents may be used only for containers for preparations for oral use or for external use for which they are authorised. Acceptable additives are indicated in the type specification for each material described in the Pharmacopoeia. Other additives may be used provided they are approved in each case by the competent authority responsible for the licensing for sale of the preparation.

For selection of a suitable plastic container, it is necessary to know the full manufacturing formula of the plastic, including all materials added during formation of the container so that the potential hazards can be assessed. The plastic container chosen for any particular preparation should be such that:

- the ingredients of the preparation in contact with the plastic material are not significantly adsorbed on its surface and do not significantly migrate into or through the plastic,
- the plastic material does not release substances in quantities sufficient to affect the stability of the preparation or to present a risk of toxicity.

Using material or materials selected to satisfy these criteria, a number of identical type samples of the container are made by a well-defined procedure and submitted to practical testing in conditions that reproduce those of the intended use, including, where appropriate, sterilisation. In order to confirm the compatibility of the container and the contents and to ensure that there are no changes detrimental to the quality of the preparation, various tests are carried out such as verification of the absence of changes in physical characteristics, assessment of any loss or gain through permeation, detection of pH changes, assessment of changes caused by light, chemical tests and, where appropriate, biological tests.

The method of manufacture is such as to ensure reproducibility for subsequent bulk manufacture and the conditions of manufacture are chosen so as to preclude the possibility of contamination with other plastic materials or their ingredients. The manufacturer of the product must ensure that containers made in production are similar in every respect to the type samples.

For the results of the testing on type samples to remain valid, it is important that:

- there is no change in the composition of the material as defined for the type samples,
- there is no change in the manufacturing process as defined for the type samples, especially as regards the temperatures to which the plastic material is exposed during conversion or subsequent procedures such as sterilisation,
- scrap material is not used.

Recycling of excess material of well-defined nature and proportions may be permitted after appropriate validation.

Subject to satisfactory testing for compatibility of each different combination of container and contents, the materials described in the Pharmacopoeia are recognised as being suitable for the specific purposes indicated, as defined above.

01/2008:90003
corrected 6.0

3.2.2.1. PLASTIC CONTAINERS FOR AQUEOUS SOLUTIONS FOR INFUSION

DEFINITION

Plastic containers for aqueous solutions for infusion are manufactured from one or more polymers, if necessary with additives. The containers described in this section are not necessarily suitable for emulsions. The polymers most commonly used are polyethylene, polypropylene and poly(vinyl chloride). The specifications of this text are to be read in conjunction with section *3.2.2. Plastic containers and closures for pharmaceutical use*.

The containers may be bags or bottles. They have a site suitable for the attachment of an infusion set designed to ensure a secure connection. They may have a site that allows an injection to be made at the time of use. They usually have a part that allows them to be suspended and which will withstand the tension occurring during use. The containers must withstand the sterilisation conditions to which they will be submitted. The design of the container and the method of sterilisation chosen are such that all parts of the containers

that may be in contact with the infusion are sterilised. The containers are impermeable to micro-organisms after closure. The containers are such that after filling they are resistant to damage from accidental freezing which may occur during transport of the final preparation. The containers are and remain sufficiently transparent to allow the appearance of the contents to be examined at any time, unless otherwise justified and authorised.

The empty containers display no defects that may lead to leakage and the filled and closed containers show no leakage.

For satisfactory storage of some preparations, the container has to be enclosed in a protective envelope. The initial evaluation of storage has then to be carried out using the container enclosed in the envelope.

TESTS

Solution S. *Use solution S within 4 h of preparation.* Fill a container to its nominal capacity with *water R* and close it, if possible using the usual means of closure; otherwise close using a sheet of pure aluminium. Heat in an autoclave so that a temperature of 121 ± 2 °C is reached within 20 min to 30 min and maintain at this temperature for 30 min. If heating at 121 °C leads to deterioration of the container, heat at 100 °C for 2 h.

Blank. Prepare a blank by heating *water R* in a borosilicate-glass flask closed by a sheet of pure aluminium at the temperature and for the time used for the preparation of solution S.

Appearance of solution S. Solution S is clear (*2.2.1*) and colourless (*2.2.2, Method II*).

Acidity or alkalinity. To a volume of solution S corresponding to 4 per cent of the nominal capacity of the container add 0.1 mL of *phenolphthalein solution R*. The solution is colourless. Add 0.4 mL of *0.01 M sodium hydroxide*. The solution is pink. Add 0.8 mL of *0.01 M hydrochloric acid* and 0.1 mL of *methyl red solution R*. The solution is orange-red or red.

Absorbance (*2.2.25*). Measure the absorbance of solution S from 230 nm to 360 nm, using the blank (see solution S) as the compensation liquid. At these wavelengths, the absorbance is not greater than 0.20.

Reducing substances. To 20.0 mL of solution S add 1 mL of *dilute sulfuric acid R* and 20.0 mL of *0.002 M potassium permanganate*. Boil for 3 min. Cool immediately. Add 1 g of *potassium iodide R* and titrate immediately with *0.01 M sodium thiosulfate*, using 0.25 mL of *starch solution R* as indicator. Carry out a titration using 20.0 mL of the blank. The difference between the titration volumes is not greater than 1.5 mL.

Transparency. Fill a container previously used for the preparation of solution S with a volume equal to the nominal capacity of the primary opalescent suspension (*2.2.1*) diluted 1 in 200 for a container made from polyethylene or polypropylene and 1 in 400 for other containers. The cloudiness of the suspension is perceptible when viewed through the container and compared with a similar container filled with *water R*.

LABELLING

The label accompanying a batch of empty containers includes a statement of:

- the name and address of the manufacturer,
- a batch number which enables the history of the container and of the plastic material of which it is manufactured to be traced.

01/2008:30203

3.2.3. STERILE PLASTIC CONTAINERS FOR HUMAN BLOOD AND BLOOD COMPONENTS

Plastic containers for the collection, storage, processing and administration of blood and its components are manufactured from one or more polymers, if necessary with additives. The composition and the conditions of manufacture of the containers are registered by the appropriate competent authorities in accordance with the relevant national legislation and international agreements.

When the composition of the materials of the different parts of the containers correspond to the appropriate specifications, their quality is controlled by the methods indicated in those specifications (see *3.1. Materials used for the manufacture of containers* and subsections).

Materials other than those described in the Pharmacopoeia may be used provided that their composition is authorised by the competent authority and that the containers manufactured from them comply with the requirements prescribed for Sterile Plastic Containers for Human Blood and Blood Components.

In normal conditions of use the materials do not release monomers, or other substances, in amounts likely to be harmful nor do they lead to any abnormal modifications of the blood.

The containers may contain anticoagulant solutions, depending on their intended use, and are supplied sterile.

Each container is fitted with attachments suitable for the intended use. The container may be in the form of a single unit or the collecting container may be connected by one or more tubes to one or more secondary containers to allow separation of the blood components to be effected within a closed system.

The outlets are of a shape and size allowing for adequate connection of the container with the blood-giving equipment. The protective coverings on the blood-taking needle and on the appendages must be such as to ensure the maintenance of sterility. They must be easily removable but must be tamper-proof.

The capacity of the containers is related to the nominal capacity prescribed by the national authorities and to the appropriate volume of anticoagulant solution. The nominal capacity is the volume of blood to be collected in the container. The containers are of a shape such that when filled they may be centrifuged.

The containers are fitted with a suitable device for suspending or fixing which does not hinder the collection, storage, processing or administration of the blood.

The containers are enclosed in sealed, protective envelopes.

CHARACTERS

The container is sufficiently transparent to allow adequate visual examination of its contents before and after the taking of the blood and is sufficiently flexible to offer minimum resistance during filling and emptying under normal conditions of use. The container contains not more than 5 mL of air.

TESTS

Solution S_1. Fill the container with 100 mL of a sterile, pyrogen-free 9 g/L solution of *sodium chloride R*. Close the container and heat it in an autoclave so that the contents are maintained at 110 °C for 30 min.

If the container to be examined contains an anticoagulant solution, first empty it, rinse the container with 250 mL of *water for injections R* at 20 ± 1 °C and discard the rinsings.

Solution S_2. Introduce into the container a volume of *water for injections R* corresponding to the intended volume of anticoagulant solution. Close the container and heat it in an

autoclave so that the contents are maintained at 110 °C for 30 min. After cooling, add sufficient *water for injections R* to fill the container to its nominal capacity.

If the container to be examined contains an anticoagulant solution, first empty it and rinse it as indicated above.

Resistance to centrifugation. Introduce into the container a volume of *water R*, acidified by the addition of 1 mL of *dilute hydrochloric acid R*, sufficient to fill it to its nominal capacity. Envelop the container with absorbent paper impregnated with a 1 in 5 dilution of *bromophenol blue solution R1* or other suitable indicator and then dried. Centrifuge at 5000 *g* for 10 min. No leakage perceptible on the indicator paper and no permanent distortion occur.

Resistance to stretch. Introduce into the container a volume of *water R*, acidified by the addition of 1 mL of *dilute hydrochloric acid R*, sufficient to fill it to its nominal capacity. Suspend the container by the suspending device at the opposite end from the blood-taking tube and apply along the axis of this tube an immediate force of 20 N (2.05 kgf). Maintain the traction for 5 s. Repeat the test with the force applied to each of the parts for filling and emptying. No break and no deterioration occur.

Leakage. Place the container which has been submitted to the stretch test between two plates covered with absorbent paper impregnated with a 1 in 5 dilution of *bromophenol blue solution R1* or other suitable indicator and then dried. Progressively apply force to the plates to press the container so that its internal pressure (i.e. the difference between the applied pressure and atmospheric pressure) reaches 67 kPa within 1 min. Maintain the pressure for 10 min. No signs of leakage are detectable on the indicator paper or at any point of attachment (seals, joints, etc.).

Vapour permeability. For a container containing an anticoagulant solution, fill with a volume of a 9 g/L solution of *sodium chloride R* equal to the volume of blood for which the container is intended.

For an empty container, fill with the same mixture of anticoagulant solution and sodium chloride solution. Close the container, weigh it and store it at 5 ± 1 °C in an atmosphere with a relative humidity of (50 ± 5) per cent for 21 days. At the end of this period the loss in mass is not greater than 1 per cent.

Emptying under pressure. Fill the container with a volume of *water R* at 5 ± 1 °C equal to the nominal capacity. Attach a transfusion set without an intravenous cannula to one of the connectors. Compress the container so as to maintain throughout the emptying an internal pressure (i.e the difference between the applied pressure and atmospheric pressure) of 40 kPa. The container empties in less than 2 min.

Speed of filling. Attach the container by means of the blood-taking tube fitted with the needle to a reservoir containing a suitable solution having a viscosity equal to that of blood, such as a 335 g/L solution of *sucrose R* at 37 °C. Maintain the internal pressure of the reservoir (i.e. the difference between the applied pressure and atmospheric pressure) at 9.3 kPa with the base of the reservoir and the upper part of the container at the same level. The volume of liquid which flows into the container in 8 min is not less than the nominal capacity of the container.

Resistance to temperature variations. Place the container in a suitable chamber having an initial temperature of 20-23 °C. Cool it rapidly in a deep-freeze to − 80 °C and maintain it at this temperature for 24 h. Raise the temperature to 50 °C and maintain for 12 h. Allow to cool to room temperature. The container complies with the tests for resistance to centrifugation, resistance to stretch, leakage, vapour permeability emptying under pressure and speed of filling prescribed above.

Transparency. Fill the empty container with a volume equal to its nominal capacity of the primary opalescent suspension (*2.2.1*) diluted so as to have an absorbance (*2.2.25*) at 640 nm of 0.37 to 0.43 (dilution factor about 1 in 16). The cloudiness of the suspension must be perceptible when viewed through the bag, as compared with a similar container filled with *water R*.

Extractable matter. Tests are carried out by methods designed to simulate as far as possible the conditions of contact between the container and its contents which occur in conditions of use.

The conditions of contact and the tests to be carried out on the eluates are prescribed, according to the nature of the constituent materials, in the particular requirements for each type of container.

Haemolytic effects in buffered systems

Stock buffer solution. Dissolve 90.0 g of *sodium chloride R*, 34.6 g of *disodium hydrogen phosphate R* and 2.43 g of *sodium dihydrogen phosphate R* in *water R* and dilute to 1000 mL with the same solvent.

Buffer solution A_0. To 30.0 mL of stock buffer solution add 10.0 mL of *water R*.

Buffer solution B_0. To 30.0 mL of stock buffer solution add 20.0 mL of *water R*.

Buffer solution C_0. To 15.0 mL of stock buffer solution add 85.0 mL of *water R*.

Introduce 1.4 mL of solution S_2 into each of three centrifuge tubes. To tube I add 0.1 mL of buffer solution A_0, to tube II add 0.1 mL of buffer solution B_0 and to tube III add 0.1 mL of buffer solution C_0. To each tube add 0.02 mL of fresh, heparinised human blood, mix well and warm on a water-bath at 30 ± 1 °C for 40 min. Use blood collected less than 3 h previously or blood collected into an anticoagulant citrate-phosphate-dextrose solution (CPD) less than 24 h previously.

Prepare three solutions containing, respectively:

3.0 mL of buffer solution A_0 and 12.0 mL of *water R* (solution A_1),

4.0 mL of buffer solution B_0 and 11.0 mL of *water R* (solution B_1),

4.75 mL of buffer solution B_0 and 10.25 mL of *water R* (solution C_1).

To tubes I, II and III add, respectively, 1.5 mL of solution A_1, 1.5 mL of solution B_1 and 1.5 mL of solution C_1. At the same time and in the same manner, prepare three other tubes, replacing solution S_2 by *water R*. Centrifuge simultaneously the tubes to be examined and the control tubes at exactly 2500 *g* in the same horizontal centrifuge for 5 min. After centrifuging, measure the absorbances (*2.2.25*) of the liquids at 540 nm using the stock buffer solution as compensation liquid. Calculate the haemolytic value as a percentage from the expression:

$$\frac{A_{exp}}{A_{100}} \times 100$$

A_{100} = absorbance of tube III,

A_{exp} = absorbance of tube I or II or of the corresponding control tubes.

The solution in tube I gives a haemolytic value not greater than 10 per cent and the haemolytic value of the solution in tube II does not differ by more than 10 per cent from that of the corresponding control tube.

Sterility (*2.6.1*). The containers comply with the test for sterility. Introduce aseptically into the container 100 mL of a sterile 9 g/L solution of sodium chloride and shake the container to ensure that the internal surfaces have been

entirely wetted. Filter the contents of the container through a membrane filter and place the membrane in the appropriate culture medium, as prescribed in the test for sterility.

Pyrogens (*2.6.8*). Solution S_1 complies with the test for pyrogens. Inject 10 mL of the solution per kilogram of the rabbit's mass.

Abnormal toxicity (*2.6.9*). Solution S_1 complies with the test for abnormal toxicity. Inject 0.5 mL of the solution into each mouse.

PACKAGING

The containers are packed in protective envelopes.

On removal from its protective envelope the container shows no leakage and no growth of micro-organisms. The protective envelope is sufficiently robust to withstand normal handling.

The protective envelope is sealed in such a manner that it cannot be opened and re-closed without leaving visible traces that the seal has been broken.

LABELLING

The labelling complies with the relevant national legislation and international agreements. The label states:

- the name and address of the manufacturer,
- a batch number which enables the history of the container and of the plastic material of which it is manufactured to be traced.

A part of the label is reserved for:

- the statement of the blood group, the reference number and all other information required by national legislation or international agreements, and an empty space is provided for the insertion of supplementary labelling.

The label of the *protective envelope* or the *label* on the container, visible through the envelope, states:

- the expiry date,
- that, once withdrawn from its protective envelope, the container must be used within 10 days.

The ink or other substance used to print the labels or the writing must not diffuse into the plastic material of the container and must remain legible up to the time of use.

01/2008:30204

3.2.4. EMPTY STERILE CONTAINERS OF PLASTICISED POLY(VINYL CHLORIDE) FOR HUMAN BLOOD AND BLOOD COMPONENTS

Unless otherwise authorised as described under *Sterile plastic containers for human blood and blood components* (*3.2.3*), the nature and composition of the material from which the containers are made comply with the requirements for *Materials based on plasticised poly(vinyl chloride) for containers for human blood and blood components and for containers for aqueous solutions for intravenous infusion* (*3.1.1*).

TESTS

They comply with the tests prescribed for *Sterile plastic containers for human blood and blood components* (*3.2.3*) and with the following tests to detect extractable matter.

Reference solution. Heat *water for injections R* in a borosilicate-glass flask in an autoclave at 110 °C for 30 min.

Acidity or alkalinity. To a volume of solution S_2 corresponding to 4 per cent of the nominal capacity of the container add 0.1 mL of *phenolphthalein solution R*. The solution remains colourless. Add 0.4 mL of *0.01 M sodium hydroxide*. The solution is pink. Add 0.8 mL of *0.01 M hydrochloric acid* and 0.1 mL of *methyl red solution R*. The solution is orange-red or red.

Absorbance (*2.2.25*): maximum 0.30, determined between wavelengths of 230 nm and 250 nm on solution S_2; maximum 0.10, determined between wavelengths of 251 nm and 360 nm on solution S_2. Use the reference solution as the compensation liquid.

Oxidisable substances. Immediately after preparation of solution S_2 (see *3.2.3*), transfer to a borosilicate-glass flask a quantity corresponding to 8 per cent of the nominal capacity of the container. At the same time, prepare a blank using an equal volume of the freshly prepared reference solution in another borosilicate-glass flask. To each solution add 20.0 mL of *0.002 M potassium permanganate* and 1 mL of *dilute sulfuric acid R*. Allow to stand protected from light for 15 min. To each solution add 0.1 g of *potassium iodide R*. Allow to stand protected from light for 5 min and titrate immediately with *0.01 M sodium thiosulfate*, using 0.25 mL of *starch solution R* as indicator. The difference between the 2 titrations is not more than 2.0 mL.

Extractable di(2-ethylhexyl) phthalate. Extraction solvent, *ethanol (96 per cent) R* diluted with *water R* to have a relative density (*2.2.5*) of 0.9389 to 0.9395, measured with a pycnometer.

Stock solution. Dissolve 0.100 g of *di(2-ethylhexyl) phthalate R* in the extraction solvent and dilute to 100.0 mL with the same solvent.

Standard solutions. Into 5 separate 100 mL volumetric flasks, introduce respectively 1.0 mL, 2.0 mL, 5.0 mL, 10.0 mL and 20.0 mL of stock solution and dilute to 100.0 mL with extraction solvent.

Measure the absorbances (*2.2.25*) of the standard solutions at the absorption maximum at 272 nm, using the extraction solvent as compensation liquid and plot a curve of absorbance against the concentration of di(2-ethylhexyl) phthalate.

Extraction procedure. Using the donor tubing and the needle or adaptor, fill the empty container with a volume equal to half the nominal volume with the extraction solvent, previously heated to 37 °C in a well-stoppered flask. Expel the air completely from the container and seal the donor tube. Immerse the filled container in a horizontal position in a water-bath maintained at 37 ± 1 °C for 60 ± 1 min without shaking. Remove the container from the water-bath, invert it gently 10 times and transfer the contents to a glass flask. Immediately measure the absorbance at the maximum at 272 nm, using the extraction solvent as compensation liquid.

Determine the concentration of di(2-ethylhexyl) phthalate in milligrams per 100 mL of extract from the calibration curve. The concentration does not exceed:

- 10 mg per 100 mL for containers of nominal volume greater than 300 mL but not greater than 500 mL;
- 13 mg per 100 mL for containers of nominal volume greater than 150 mL but not greater than 300 mL;
- 14 mg per 100 mL for containers of nominal volume up to 150 mL.

Chlorides (*2.4.4*): maximum 0.4 ppm, determined with solution S_2.

Prepare the standard using a mixture of 1.2 mL of *chloride standard solution (5 ppm Cl) R* and 13.8 mL of *water R*.

Ammonium (*2.4.1*): maximum 2 ppm.

Dilute 5 mL of solution S_2 to 14 mL with *water R*.

Residue on evaporation. Evaporate to dryness 100 mL of solution S_2 in a borosilicate-glass beaker of appropriate capacity, previously heated to 105 °C. Evaporate to dryness in the same conditions 100 mL of the reference solution (blank test). Dry to constant mass at 100-105 °C. The residue from solution S_2 weighs a maximum of 3 mg, allowing for the blank test.

PACKAGING

See *Sterile plastic containers for human blood and blood components* (*3.2.3*).

LABELLING

See *Sterile plastic containers for human blood and blood components* (*3.2.3*).

01/2008:30205

3.2.5. STERILE CONTAINERS OF PLASTICISED POLY(VINYL CHLORIDE) FOR HUMAN BLOOD CONTAINING ANTICOAGULANT SOLUTION

Sterile plastic containers containing an anticoagulant solution complying with the monograph*Anticoagulant and preservative solutions for human blood (0209)* are used for the collection, storage and administration of blood. Before filling they comply with the description and characters given under *Empty sterile containers of plasticised poly(vinyl chloride) for human blood and blood components* (*3.2.4*).

Unless otherwise authorised as described under *Sterile plastic containers for human blood and blood components* (*3.2.3*), the nature and composition of the material from which the containers are made should comply with the requirements prescribed for *Materials based on plasticised poly(vinyl chloride) for containers for human blood and blood components and for containers for aqueous solutions for intravenous infusion* (*3.1.1*).

TESTS

They comply with the tests prescribed for *Sterile plastic containers for human blood and blood components* (*3.2.3*) and with the following tests to measure the volume of anticoagulant solution and to detect extractable matter.

Volume of anticoagulant solution. Empty the container, collecting the anticoagulant solution in a graduated cylinder. The volume does not differ by more than ± 10 per cent from the stated volume.

Spectrophotometric examination (*2.2.25*). Measure the absorbance of the anticoagulant solution from the container between 250 nm and 350 nm, using as the compensation liquid an anticoagulant solution of the same composition that has not been in contact with a plastic material. The absorbance at the maximum at 280 nm is not greater than 0.5.

Extractable di(2-ethylhexyl) phthalate. Carefully remove the anticoagulant solution by means of the flexible transfer tube. Using a funnel fitted to the tube, completely fill the container with *water R*, leave in contact for 1 min squeezing the container gently, then empty completely. Repeat the rinsing.

The container, so emptied and rinsed, complies with the test for extractable di(2-ethylhexyl) phthalate prescribed for *Empty sterile plastic containers of plasticised poly(vinyl chloride) for human blood and blood components* (*3.2.4*).

PACKAGING AND LABELLING

See *Sterile plastic containers for human blood and blood components* (*3.2.3*).

01/2008:30206

3.2.6. SETS FOR THE TRANSFUSION OF BLOOD AND BLOOD COMPONENTS

DEFINITION

Sets for the transfusion of blood and blood components consist principally of plastic tubing to which are fitted the parts necessary to enable the set to be used for transfusion in the appropriate manner. Sets include a closure-piercing device, a blood filter, a drip chamber, a flow regulator, a Luer connector and, usually, a site that allows an injection to be made at the time of use. When the sets are to be used with containers requiring an air-filter, this may be incorporated in the closure-piercing device or a separate air-inlet device may be used. The chamber enclosing the blood filter, the drip chamber and the main tubing are transparent. The materials chosen and the design of the set are such as to ensure absence of haemolytic effects. The sets comply with current standards regarding dimensions and performance.

All parts of the set that may be in contact with blood and blood components are sterile and pyrogen-free. Each set is presented in an individual package that maintains the sterility of the contents. The sets are not to be re-sterilised or re-used.

Sets for the transfusion of blood and blood components are manufactured in accordance with the rules of good manufacturing practice for medical devices and any relevant national regulations.

TESTS

Carry out the tests on sterilised sets.

Solution S. Make a closed circulation system from 3 sets and a 300 mL borosilicate-glass vessel. Fit to the vessel a suitable thermostat device that maintains the temperature of the liquid in the vessel at 37 ± 1 °C. Circulate 250 mL of *water for injections R* through the system in the direction used for transfusion for 2 h at a rate of 1 L/h (for example using a peristaltic pump applied to as short a piece of suitable silicone elastomer tubing as possible). Collect the whole of the solution and allow to cool.

Appearance of solution. Solution S is clear (*2.2.1*) and colourless (*2.2.2, Method II*).

Acidity or alkalinity. To 25 mL of solution S add 0.15 mL of *BRP indicator solution R*. Not more than 0.5 mL of *0.01 M sodium hydroxide* is required to change the colour of the indicator to blue. To 25 mL of solution S add 0.2 mL of *methyl orange solution R*. Not more than 0.5 mL of *0.01 M hydrochloric acid* is required to reach the beginning of the colour change of the indicator.

Absorbance (*2.2.25*): maximum 0.30, determined between wavelengths of 230 nm and 250 nm on solution S; maximum 0.15, determined between wavelengths of 251 nm and 360 nm on solution S.

Reducing substances. *Carry out the test within 4 h of preparation of solution S.* To 20.0 mL of solution S add 1 mL of *dilute sulfuric acid R* and 20.0 mL of *0.002 M potassium permanganate*. Boil for 3 min and cool immediately. Add 1 g of *potassium iodide R* and titrate with *0.01 M sodium thiosulfate* using 0.25 mL of *starch solution R* as indicator. Carry out a blank test using 20 mL of *water for injections R*. The difference between the titration volumes is not greater than 2.0 mL.

Ethylene oxide. Gas chromatography (*2.2.28*).

Column:

- *material*: stainless steel;
- *size*: *l* = 1.5 m, Ø = 6.4 mm;
- *stationary phase*: *silanised diatomaceous earth for gas chromatography R* impregnated with *macrogol 1500 R* (3 g per 10 g).

Carrier gas: *helium for chromatography R*.

Flow rate: 20 mL/min.

Temperature:

- *column*: 40 °C;
- *injection port*: 100 °C;
- *detector*: 150 °C.

Detection: flame ionisation.

Verify the absence of peaks interfering with the ethylene oxide peak by carrying out the test using an unsterilised set or using the same chromatographic system with the following modifications.

Column:

- *size*: *l* = 3 m, Ø = 3.2 mm;
- *stationary phase*: *silanised diatomaceous earth for gas chromatography R* impregnated with *triscyanoethoxypropane R* (2 g per 10 g);
- *temperature*: 60 °C.

Ethylene oxide solution. Prepare in a fume cupboard. Place 50.0 mL of *dimethylacetamide R* in a 50 mL vial, stopper, secure the stopper and weigh to the nearest 0.1 mg. Fill a 50 mL polyethylene or polypropylene syringe with gaseous *ethylene oxide R*, allow the gas to remain in contact with the syringe for about 3 min, empty the syringe and fill again with 50 mL of gaseous *ethylene oxide R*. Fit a hypodermic needle to the syringe and reduce the volume of gas in the syringe from 50 mL to 25 mL. Inject these 25 mL of ethylene oxide slowly into the vial, shaking gently and avoiding contact between the needle and the liquid. Weigh the vial again: the increase in mass is 45 mg to 60 mg and is used to calculate the exact concentration of the solution (about 1 g/L).

Test. Weigh the set after removing the package. Cut the set into pieces of maximum dimension 1 cm and place the pieces in a 250-500 mL vial containing 150 mL of *dimethylacetamide R*. Close the vial with a suitable stopper and secure the stopper. Place the vial in an oven at 70 ± 1 °C for 16 h. Remove 1 mL of the hot gas from the vial and inject it onto the column. From the calibration curve and the height of the peak obtained, calculate the mass of ethylene oxide in the vial.

Calibration curve. In a series of 7 vials of the same type as that used for the test and each containing 150 mL of *dimethylacetamide R*, place respectively 0 mL, 0.05 mL, 0.10 mL, 0.20 mL, 0.50 mL, 1.00 mL and 2.00 mL of the ethylene oxide solution, i.e. about 0 µg, 50 µg, 100 µg, 200 µg, 500 µg, 1000 µg and 2000 µg of ethylene oxide. Stopper the vials, secure the stoppers and place the vials in an oven at 70 ± 1 °C for 16 h. Inject 1 mL of the hot gas from each vial onto the column and draw a calibration curve from the heights of the peaks and the mass of ethylene oxide in each flask.

Limit: if the label states that ethylene oxide has been used for sterilisation:

- *ethylene oxide*: maximum 10 ppm.

Extraneous particles. Fill the set via the normal inlet with a 0.1 g/L solution of *sodium laurilsulfate R*, previously filtered through a sintered-glass filter (16) (*2.1.2*) and heated to 37 °C. Collect the liquid via the normal outlet. When examined under suitable conditions of visibility, the liquid is clear and practically free from visible particles and filaments (it is assumed that particles and filaments with a diameter equal to or greater than 50 µm are visible to the naked eye).

Flow rate. Pass through a complete set with the flow regulator fully open 50 mL of a solution having a viscosity of 3 mPa·s (3 cP) (for example a 33 g/L solution of *macrogol 4000 R* at 20 °C) under a static head of 1 m. The time required for passage of 50 mL of the solution is not greater than 90 s.

Resistance to pressure. Make tight the extremities of the set and any air-inlet device. Connect the set to a compressed air outlet fitted with a pressure regulator. Immerse the set in a tank of water at 20-23 °C. Apply progressively an excess pressure of 100 kPa and maintain for 1 min. No air bubble escapes from the set.

Transparency. Use as reference suspension the primary opalescent suspension (*2.2.1*) diluted 1 in 8 for sets having tubing with an external diameter less than 5 mm and diluted 1 in 16 for sets having tubing with an external diameter of 5 mm or greater. Circulate the reference suspension through the set and compare with a set from the same batch filled with *water R*. The opalescence and presence of bubbles are discernible.

Residue on evaporation. Evaporate 50.0 mL of solution S to dryness on a water-bath and dry to constant mass in an oven at 100-105 °C. Carry out a blank test using 50.0 mL of *water for injections R*. The difference between the masses of the residues is not greater than 1.5 mg.

Sterility (*2.6.1*). The sets comply with the test for sterility. If the sets are stated to be sterile only internally, pass 50 mL of buffered sodium chloride-peptone solution pH 7.0 (*2.6.12*) through the set and use to carry out the test by the membrane filtration method.

If the sets are stated to be sterile both internally and externally, open the package with the necessary aseptic precautions and:

- for the direct inoculation method, place the set or its components in a suitable container containing a sufficient quantity of the culture medium to ensure complete immersion;
- for the membrane filtration method, place the set or its components in a suitable container containing a sufficient quantity of buffered sodium chloride-peptone solution pH 7.0 (*2.6.12*) to allow total rinsing for 10 min.

Pyrogens (*2.6.8*). Connect together 5 sets and pass through the assembly at a flow rate not exceeding 10 mL/min 250 mL of a sterile, pyrogen-free 9 g/L solution of *sodium chloride R*. Collect the solution aseptically in a pyrogen-free container. The solution complies with the test for pyrogens. Inject per kilogram of the rabbit's mass, 10 mL of the solution.

LABELLING

The label states, where applicable, that the set has been sterilised using ethylene oxide.

01/2008:30208

3.2.8. STERILE SINGLE-USE PLASTIC SYRINGES

DEFINITION

Sterile single-use plastic syringes are medical devices intended for immediate use for the administration of injectable preparations. They are supplied sterile and pyrogen-free and are not to be re-sterilised or re-used. They consist of a syringe barrel and a piston which may have an elastomer sealing ring; they may be fitted with a needle which may be non-detachable. Each syringe is presented with individual protection for maintaining sterility.

The barrel of the syringe is sufficiently transparent to permit dosages to be read without difficulty and allow air bubbles and foreign particles to be discerned.

The plastics and elastomer materials of which the barrel and piston are made comply with the appropriate specification or with the requirements of the competent authority. The most commonly used materials are polypropylene and polyethylene. The syringes comply with current standards regarding dimensions and performance.

Silicone oil (*3.1.8*) may be applied to the internal wall of the barrel to assist in the smooth operation of the syringe but there remains no excess capable of contaminating the contents at the time of use. The inks, glues and adhesives for the marking

on the syringe or on the package and, where necessary, the assembly of the syringe and its package, do not migrate across the walls.

TESTS

Solution S. Prepare the solution in a manner that avoids contamination by foreign particles. Using a sufficient number of syringes to produce 50 mL of solution, fill the syringes to their nominal volume with *water for injections R* and maintain at 37 °C for 24 h. Combine the contents of the syringes in a suitable borosilicate-glass container.

Appearance of solution. Solution S is clear (*2.2.1*) and colourless (*2.2.2, Method II*) and is practically free from foreign solid particles.

Acidity or alkalinity. To 20 mL of solution S add 0.1 mL of *bromothymol blue solution R1*. Not more than 0.3 mL of *0.01 M sodium hydroxide* or *0.01 M hydrochloric acid* is required to change the colour of the indicator.

Absorbance (*2.2.25*): maximum 0.40, determined between wavelengths of 220 nm and 360 nm on solution S.

Ethylene oxide. Gas chromatography (*2.2.28*).

Column:
- *material*: stainless steel;
- *size*: *l* = 1.5 m, Ø = 6.4 mm;
- *stationary phase*: *silanised diatomaceous earth for gas chromatography R* impregnated with *macrogol 1500 R* (3 g per 10 g).

Carrier gas: *helium for chromatography R*.

Flow rate: 20 mL/min.

Temperature:
- *Column*: 40 °C;
- *Injection port*: 100 °C;
- *Detector*: 150 °C.

Detection: flame ionisation.

Verify the absence of peaks interfering with the ethylene oxide peak, either by carrying out the test using an unsterilised syringe or using the same chromatographic system with the following modifications:

Column:
- *size*: *l* = 3 m, Ø = 3.2 mm;
- *stationary phase*: *silanised diatomaceous earth for gas chromatography R* impregnated with *triscyanoethoxypropane R* (2 g per 10 g);
- *temperature*: 60 °C.

Ethylene oxide solution. Prepare in a fume cupboard. Place 50.0 mL of *dimethylacetamide R* in a 50 mL vial, stopper, secure the stopper and weigh to the nearest 0.1 mg. Fill a 50 mL polyethylene or polypropylene syringe with gaseous *ethylene oxide R*, allow the gas to remain in contact with the syringe for about 3 min, empty the syringe and fill again with 50 mL of gaseous *ethylene oxide R*. Fit a hypodermic needle to the syringe and reduce the volume of gas in the syringe from 50 mL to 25 mL. Inject these 25 mL of ethylene oxide slowly into the vial, shaking gently and avoiding contact between the needle and the liquid. Weigh the vial again: the increase in mass is 45 mg to 60 mg and is used to calculate the exact concentration of the solution (about 1 g/L).

Calibration curve. In a series of seven vials of the same type as that used for the test and each containing 150 mL of *dimethylacetamide R*, place respectively 0 mL, 0.05 mL, 0.10 mL, 0.20 mL, 0.50 mL, 1.00 mL and 2.00 mL of the ethylene oxide solution, i.e. about 0 µg, 50 µg, 100 µg, 200 µg, 500 µg, 1000 µg and 2000 µg of ethylene oxide. Stopper the vials, secure the stoppers and place the vials in an oven at 70 ± 1 °C for 16 h. Inject 1 mL of the hot gas from each vial onto the column and draw a calibration curve from the heights of the peaks and the mass of ethylene oxide in each flask.

Test. Weigh the syringe after removing the package. Cut the syringe into pieces of maximum dimension 1 cm and place the pieces in a 250 mL to 500 mL vial containing 150 mL of *dimethylacetamide R*. Close the vial with a suitable stopper and secure the stopper. Place the vial in an oven at 70 ± 1 °C for 16 h. Remove 1 mL of the hot gas from the vial and inject it onto the column. From the calibration curve and the height of the peak obtained, calculate the mass of ethylene oxide in the vial.

Limit: if the label states that ethylene oxide has been used for sterilisation:
- *ethylene oxide*: maximum 10 ppm.

Silicone oil. Calculate the internal surface area of a syringe in square centimetres using the following expression:

$$2\sqrt{V \cdot \pi \cdot h}$$

V = nominal volume of the syringe, in cubic centimetres;

h = height of the graduation, in centimetres.

Take a sufficient number of syringes to give an internal surface area of 100 cm^2 to 200 cm^2. Aspirate into each syringe a volume of *methylene chloride R* equal to half the nominal volume and make up to the nominal volume with air. Rinse the internal surface corresponding to the nominal volume with the solvent by inverting the syringe ten times in succession with the needle fitting closed by a finger covered by a plastic film inert to methylene chloride. Expel the extracts into a tared dish and repeat the operation. Evaporate the combined extracts to dryness on a water-bath. Dry at 100-105 °C for 1 h. The residue weighs not more than 0.25 mg per square centimetre of internal surface area.

Examine the residue by infrared absorption spectrophotometry (*2.2.24*). It shows absorption bands typical of silicone oil at 805 cm^{-1}, 1020 cm^{-1}, 1095 cm^{-1}, 1260 cm^{-1} and 2960 cm^{-1}.

Reducing substances. To 20.0 mL of solution S add 2 mL of *sulfuric acid R* and 20.0 mL of *0.002 M potassium permanganate*. Boil for 3 min. Cool immediately. Add 1 g of *potassium iodide R* and titrate immediately with *0.01 M sodium thiosulfate* using 0.25 mL of *starch solution R* as indicator. Carry out a blank titration using 20.0 mL of *water for injections R*. The difference between the titration volumes is not greater than 3.0 mL.

Transparency. Fill a syringe with *water R* (blank) and fill another with a 1 in 10 dilution of primary opalescent suspension (*2.2.1*). Use primary opalescent suspension that has been allowed to stand at 20 ± 2 °C for 24 h before use. Compare with the naked eye in diffused light against a dark background. The opalescence of the suspension is detectable when compared with the blank.

Sterility (*2.6.1*). *Syringes stated to be sterile comply with the test for sterility carried out as follows*. Using aseptic technique, open the package, withdraw the syringe, separate the components and place each in a suitable container containing sufficient culture media to cover the part completely. Use both the recommended media (*2.6.1*).

Syringes stated to be sterile only internally comply with the test for sterility carried out as follows. Use 50 mL of inoculation medium for each test syringe. Using aseptic technique, remove the needle protector and submerge the needle in the culture medium. Flush the syringe five times by withdrawing the plunger to its fullest extent.

Pyrogens (*2.6.8*). Syringes with a nominal volume equal to or greater than 15 mL comply with the test for pyrogens. Fill a minimum of three syringes to their nominal volume with a pyrogen-free 9 g/L solution of *sodium chloride R* and maintain at a temperature of 37 °C for 2 h. Combine the solutions aseptically in a pyrogen-free container and carry out the test immediately. Inject per kilogram of the rabbit's mass 10 mL of the solution.

LABELLING

The label on the *package* states:

- the batch number;
- a description of the syringe;
- that the syringe is for single-use only.

The label on the *outer package* states:

- the method of sterilisation;
- that the syringe is sterile or that it is sterile only internally;
- the identity of the manufacturer;
- that the syringe is not to be used if the packaging is damaged or the sterility protector is loose.

01/2014:30209

3.2.9. RUBBER CLOSURES FOR CONTAINERS FOR AQUEOUS PARENTERAL PREPARATIONS, FOR POWDERS AND FOR FREEZE-DRIED POWDERS

Rubber closures for containers for aqueous parenteral preparations, for powders and for freeze-dried powders are made of materials obtained by vulcanisation (cross-linking), using appropriate additives, of macromolecular organic substances (elastomers). The elastomers are produced from natural or synthetic substances by polymerisation. The choice of the principal components and of the various additives (for example, vulcanisers, accelerators, stabilisers, pigments) depends on the properties required for the finished article. The specifications do not apply to closures made from silicone elastomer (which are dealt with in chapter *3.1.9. Silicone elastomer for closures and tubing*), to laminated closures or to lacquered closures.

Rubber closures may be classified in 2 types: type I closures meet the strictest requirements and are preferred; type II closures have mechanical properties suitable for special uses (for example, multiple piercing) and cannot meet requirements as severe as for type I closures because of their chemical composition.

The closures chosen for use with a particular preparation are such that:

- the components of the preparation in contact with the closures are not adsorbed onto the surface of the closures and do not migrate into or through the closures to an extent sufficient to affect the preparation adversely;
- the closures do not release substances in quantities sufficient to affect the stability of the preparation or to present a risk of toxicity.

The closures are compatible with the preparation for which they are used throughout its period of validity.

The manufacturer of the preparation must obtain from the supplier an assurance that the composition of the closure does not vary and that it is identical to that of the closure used during compatibility testing. If the supplier informs the manufacturer of the preparation that changes have been made to the composition, compatibility testing must be repeated, totally or partly, depending on the nature of the changes.

The closures are washed and may be sterilised before use.

CHARACTERS

Rubber closures are elastic. They are translucent or opaque and have no characteristic colour, the latter depending on the additives used. They are practically insoluble in tetrahydrofuran, in which, however, a considerable reversible swelling may occur. They are homogeneous and practically free from flash and adventitious materials (for example, fibres, foreign particles, waste rubber).

Identification of the type of rubber used for the closures is not within the scope of this specification. The identification tests given below distinguish between closures made from rubber and those made from silicone elastomer and plastic materials but do not differentiate all types of rubber. Other identity tests may be carried out with the aim of detecting differences in a batch compared with the closures used for compatibility testing. One or more of the following analytical methods may be applied for this purpose: determination of relative density, determination of sulfated ash, determination of sulfur content, thin-layer chromatography carried out on an extract, ultraviolet absorption spectrophotometry of an extract, infrared absorption spectrophotometry of a pyrolysate or attenuated total reflectance (ATR).

IDENTIFICATION

A. Infrared absorption spectrophotometry (*2.2.24*).

Examine by attenuated total reflectance (ATR). The spectrum obtained is identical to the spectrum obtained with the type sample. If necessary, cut the sample along an appropriate axis, examine the cut surface and compare the spectrum with that obtained with the type sample prepared in the same way.

If direct ATR measurement on the surface is not feasible (mainly rubber closures filled with carbon black), heat 1-2 g in a heat-resistant test-tube over an open flame to dry the sample and continue heating until pyrolysate vapours are condensed near the top edge of the test-tube. Examine the pyrolysate of the sample by ATR and compare the spectrum with that obtained with the pyrolysate of the type sample.

B. Total ash (*2.4.16*).

Determine the percentage content of total ash in the sample to be examined and compare with the percentage content of total ash in the type sample (A_0). The total ash content falls within the following ranges depending on the total ash content of the type sample.

Total ash in the type sample, A_0 (per cent)	Limit for total ash in the sample (per cent)
$A_0 \leq 5.0$	$(A_0 - 0.75)$ to $(A_0 + 0.75)$
$5.0 < A_0 \leq 10$	$(A_0 - 1.0)$ to $(A_0 + 1.0)$
$A_0 > 10$	$(A_0 - 2.0)$ to $(A_0 + 2.0)$

In addition to the use of platinum and silica crucibles described in general chapter *2.4.16*, porcelain crucibles may be used. The sample may be ignited using a microwave oven instead of a muffle furnace.

TESTS

The samples to be analysed may be washed and sterilised before use.

Solution S. Place a number of uncut closures with a total surface area of about 100 cm^2 in a suitable glass container, cover with *water R*, boil for 5 min and rinse 5 times with cold *water R*. Place the washed closures in a wide-necked flask (type I glass, *3.2.1*), add 200 mL of *water R* and weigh. Cover the mouth of the flask with a borosilicate-glass beaker. Heat in an autoclave so that a temperature of 121 ± 2 °C is reached within 20-30 min and maintain at this temperature for 30 min. Cool to room temperature over about 30 min. Make up to the original mass with *water R*. Shake and decant the solution immediately. Shake solution S before each test.

If using a tightly closed flask (type I glass, *3.2.1*) with an inert closure instead of a wide-necked flask covered with a borosilicate-glass beaker, it is not necessary to make up to the original mass.

Blank solution. Prepare a blank solution in the same manner using 200 mL of *water R*.

Appearance of solution S. For type I closures, solution S is not more opalescent than reference suspension II (*2.2.1*) and for type II closures, solution S is not more opalescent than reference suspension III. Solution S is not more intensely coloured than reference solution GY_5 (*2.2.2, Method II*).

Acidity or alkalinity. To 20 mL of solution S add 0.1 mL of *bromothymol blue solution R1*. Not more than 0.3 mL of *0.01 M sodium hydroxide* or 0.8 mL of *0.01 M hydrochloric acid* is required to change the colour of the indicator to blue or yellow, respectively.

Absorbance. *Carry out the test within 5 h of preparation of solution S.* Filter solution S through a membrane filter (nominal pore size 0.45 µm), rejecting the first few millilitres of filtrate. Measure the absorbance (*2.2.25*) of the filtrate at wavelengths from 220-360 nm using the blank (see solution S) as compensation liquid. At these wavelengths, the absorbance does not exceed 0.2 for type I closures or 4.0 for type II closures. If necessary, dilute the filtrate before measurement of the absorbance and correct the result for the dilution.

Reducing substances. *Carry out the test within 4 h of preparation of solution S.* To 20.0 mL of solution S add 1 mL of *dilute sulfuric acid R* and 20.0 mL of *0.002 M potassium permanganate*. Boil for 3 min. Cool. Add 1 g of *potassium iodide R* and titrate immediately with *0.01 M sodium thiosulfate*, using 0.25 mL of *starch solution R* as indicator. Carry out a titration using 20.0 mL of the blank. The difference between the titration volumes is not greater than 3.0 mL for type I closures and 7.0 mL for type II closures.

Ammonium (*2.4.1, Method A*): maximum 2 ppm.

Dilute 5 mL of solution S to 14 mL with *water R*.

Extractable zinc: maximum of 5 µg of extractable Zn per millilitre of solution S.

Atomic absorption spectrometry (*2.2.23, Method I*).

Test solution. Dilute 10.0 mL of solution S to 100 mL with *0.1 M hydrochloric acid*.

Reference solutions. Prepare the reference solutions using *zinc standard solution (10 ppm Zn) R* diluted with *0.1 M hydrochloric acid*.

Source: zinc hollow-cathode lamp.

Wavelength: 213.9 nm.

Atomisation device: air-acetylene flame.

Extractable heavy metals (*2.4.8*): maximum 2 ppm.

Solution S complies with test A. Prepare the reference solution using *lead standard solution (2 ppm Pb) R*.

Residue on evaporation. Evaporate 50.0 mL of solution S to dryness on a water-bath and dry at 100-105 °C. The residue weighs not more than 2.0 mg for type I closures and not more than 4.0 mg for type II closures.

Volatile sulfides. Place closures, cut if necessary, with a total surface area of 20 ± 2 cm^2 in a 100 mL conical flask and add 50 mL of a 20 g/L solution of *citric acid R*. Place a piece of *lead acetate paper R* over the mouth of the flask and maintain the paper in position by placing over it an inverted weighing bottle. Heat in an autoclave at 121 ± 2 °C for 30 min. Any black stain on the paper is not more intense than that of a standard, treated in the same manner, prepared by mixing 50 mL of a 20 g/L solution of *citric acid R* and 5.0 mL of a freshly prepared 0.0308 g/L solution of *sodium sulfide R* in *water R*.

For the tests for penetrability, fragmentation and self-sealing, treat the closures as described for the preparation of solution S and allow to dry.

Penetrability. For closures intended to be pierced by a hypodermic needle, carry out the following test. Fill 10 suitable vials to the nominal volume with *water R*, fit the closures to be examined and secure with a cap. Using for each closure a new, lubricated, long-bevel[(1)] (bevel angle 12 ± 2°) hypodermic needle with an external diameter of 0.8 mm, pierce the closures with the needle perpendicular to the surface. The force required for piercing, determined with an accuracy of ± 0.25 N, is not greater than 10 N for each closure.

Fragmentation. For closures intended to be pierced by a hypodermic needle, carry out the following test. If the closures are to be used for aqueous preparations, introduce in 12 clean vials a volume of *water R* corresponding to the nominal volume minus 4 mL, close the vials with the closures to be examined, secure with a cap and allow to stand for 16 h. If the closures are to be used with dry preparations, close 12 clean vials with the closures to be examined. Using a lubricated, long-bevel[(1)] (bevel angle 12 ± 2°) hypodermic needle with an external diameter of 0.8 mm fitted to a clean syringe, inject into the vial 1 mL of *water R* and remove 1 mL of air; carry out this operation 4 times for each closure, piercing the closure each time at a different site. Use a new needle for each closure and check that the needle is not blunted during the test. Pass the liquid in the vials through a filter with a pore size of 0.5 µm. Count the fragments of rubber visible to the naked eye. The total number of fragments does not exceed 5. This limit is based on the assumption that fragments with a diameter equal to or greater than 50 µm are visible to the naked eye; in cases of doubt or dispute, the fragments are examined with a microscope to verify their nature and size.

Self-sealing test. For closures intended to be used with multidose containers, carry out the following test. Fill 10 suitable vials to the nominal volume with *water R*, fit the closures to be examined and secure with a cap. Using for each closure a new hypodermic needle with an external diameter of 0.8 mm, pierce each closure 10 times, piercing the closure each time at a different site. Immerse the vials upright in a 1 g/L solution of *methylene blue R* and reduce the external pressure by 27 kPa for 10 min. Restore atmospheric pressure and leave the vials immersed for 30 min. Rinse the outside of the vials. None of the vials contains any trace of coloured solution.

(1) See ISO 7864 "Sterile hypodermic needles for single use".

04/2013:40000

4. REAGENTS

Additional information for reagents that can only be fully identified by a trademark or whose availability is limited may be found in the Knowledge database on the EDQM website. This information is given only to make it easier to obtain such reagents and this does not suggest in any way that the mentioned suppliers are especially recommended or certified by the European Pharmacopoeia Commission or the Council of Europe. It is therefore acceptable to use reagents from another source provided that they comply with the standards of the Pharmacopoeia.

04/2013:40100

4.1. REAGENTS, STANDARD SOLUTIONS, BUFFER SOLUTIONS

Where the name of a substance or a solution is followed by the letter R (the whole in italics), this indicates a reagent included in the following list. The specifications given for reagents do not necessarily guarantee their quality for use in medicines.

Within the description of each reagent there is a 7-digit reference code in italics (for example, *1002501*). This number, which will remain unchanged for a given reagent during subsequent revisions of the list, is used for identification purposes by the Secretariat, and users of the Pharmacopoeia may also find it useful, for example in the management of reagent stocks. The description may also include a CAS number (Chemical Abstract Service Registry Number) recognisable by its typical format, for example 9002-93-1.

Some of the reagents included in the list are toxic and are to be handled in conformity with good quality control laboratory practice.

Reagents in aqueous solution are prepared using *water R*. Where a reagent solution is described using an expression such as 'hydrochloric acid (10 g/L HCl)', the solution is prepared by an appropriate dilution with *water R* of a more concentrated reagent solution specified in this chapter. Reagent solutions used in the limit tests for barium, calcium and sulfates are prepared using *distilled water R*. Where the name of the solvent is not stated, an aqueous solution is intended.

The reagents and reagent solutions are to be stored in well-closed containers. The labelling should comply with the relevant national legislation and international agreements.

01/2014:40101

4.1.1. REAGENTS

Acacia. *1000100.*

See *Acacia (0307)*.

Acacia solution. *1000101.*

Dissolve 100 g of *acacia R* in 1000 mL of *water R*. Stir with a mechanical stirrer for 2 h. Centrifuge at about 2000 *g* for 30 min to obtain a clear solution.

Storage: in polyethylene containers of about 250 mL capacity at a temperature of 0 °C to – 20 °C.

Acebutolol hydrochloride. *1148900.* [34381-68-5].

See *Acebutolol hydrochloride (0871)*.

Acetal. $C_6H_{14}O_2$. (M_r 118.2). *1112300.* [105-57-7]. Acetaldehyde diethyl acetal. 1,1-Diethoxyethane.

Clear, colourless, volatile liquid, miscible with water and with ethanol (96 per cent).

d_{20}^{20}: about 0.824.

n_D^{20}: about 1.382.

bp: about 103 °C.

Acetaldehyde. C_2H_4O. (M_r 44.1). *1000200.* [75-07-0]. Ethanal.

Clear, colourless flammable liquid, miscible with water and with ethanol (96 per cent).

d_{20}^{20}: about 0.788.

n_D^{20}: about 1.332.

bp: about 21 °C.

Acetaldehyde ammonia trimer trihydrate. $C_6H_{15}N_3,3H_2O$. (M_r 183.3). *1133500.* [58052-80-5]. 2,4,6-Trimethylhexahydro-1,3,5-triazine trihydrate.

mp: 95 °C to 97 °C.

Acetic acid, anhydrous. $C_2H_4O_2$. (M_r 60.1). *1000300.* [64-19-7].

Content: minimum 99.6 per cent *m/m* of $C_2H_4O_2$.

Colourless liquid or white or almost white, shining, fern-like crystals, miscible with or very soluble in water, in ethanol (96 per cent), in glycerol (85 per cent), and in most fatty and essential oils.

d_{20}^{20}: 1.052 to 1.053.

bp: 117 °C to 119 °C.

A 100 g/L solution is strongly acid (*2.2.4*).

A 5 g/L solution neutralised with *dilute ammonia R2* gives reaction (b) of acetates (*2.3.1*).

Freezing point (*2.2.18*): minimum 15.8 °C.

Water (*2.5.12*): maximum 0.4 per cent. If the water content is more than 0.4 per cent it may be adjusted by adding the calculated amount of *acetic anhydride R*.

Storage: protected from light.

Acetic acid, glacial. $C_2H_4O_2$. (M_r 60.1). *1000400.* [64-19-7].

See *Acetic acid, glacial (0590)*.

Acetic acid. *1000401.*

Content: 290 g/L to 310 g/L of $C_2H_4O_2$ (M_r 60.1).

Dilute 30 g of *glacial acetic acid R* to 100 mL with *water R*.

Acetic acid, dilute. *1000402.*

Content: 115 g/L to 125 g/L of $C_2H_4O_2$ (M_r 60.1).

Dilute 12 g of *glacial acetic acid R* to 100 mL with *water R*.

Acetic acid, dilute R1. *1000403.*

Content: 57.5 g/L to 62.5 g/L (M_r 60.1).

Dilute 6 g of *glacial acetic acid R* to 100 mL with *water R*.

Acetic anhydride. $C_4H_6O_3$. (M_r 102.1). *1000500.* [108-24-7].

Content: minimum 97.0 per cent *m/m* of $C_4H_6O_3$.

Clear, colourless liquid.

bp: 136 °C to 142 °C.

Assay. Dissolve 2.00 g in 50.0 mL of *1 M sodium hydroxide* in a ground-glass-stoppered flask and boil under a reflux condenser for 1 h. Titrate with *1 M hydrochloric acid*, using 0.5 mL of *phenolphthalein solution R* as indicator. Calculate the number of millilitres of *1 M sodium hydroxide* required for 1 g (n_1). Dissolve 2.00 g in 20 mL of *cyclohexane R* in a ground-glass-stoppered flask, cool in ice and add a cold mixture of 10 mL of *aniline R* and 20 mL of *cyclohexane R*. Boil the mixture under a reflux condenser for 1 h, add 50.0 mL of *1 M sodium hydroxide* and shake vigorously. Titrate with *1 M hydrochloric acid*, using 0.5 mL of *phenolphthalein solution R* as indicator. Calculate the number of millilitres of *1 M sodium hydroxide* required for 1 g (n_2). Calculate the percentage of $C_4H_6O_3$ from the following expression:

$$10.2\,(n_1 - n_2)$$

Acetic anhydride solution R1. *1000501.*

Dissolve 25.0 mL of *acetic anhydride R* in *anhydrous pyridine R* and dilute to 100.0 mL with the same solvent.

Storage: protected from light and air.

Acetic anhydride - sulfuric acid solution. *1000502.*

Carefully mix 5 mL of *acetic anhydride R* with 5 mL of *sulfuric acid R*. Add dropwise and with cooling to 50 mL of *anhydrous ethanol R*.

Prepare immediately before use.

Acetone. *1000600.* [67-64-1].

See *Acetone (0872)*.

Acetonitrile. C_2H_3N. (M_r 41.05). *1000700.* [75-05-8]. Methyl cyanide. Ethanenitrile.

Clear, colourless liquid, miscible with water, with acetone and with methanol.

d_{20}^{20}: about 0.78.

n_D^{20}: about 1.344.

A 100 g/L solution is neutral to litmus paper.

Distillation range (*2.2.11*). Not less than 95 per cent distils between 80 °C and 82 °C.

Acetonitrile used in spectrophotometry complies with the following additional test.

Minimum transmittance (*2.2.25*) using *water R* as compensation liquid: 98 per cent from 255 nm to 420 nm.

Acetonitrile for chromatography. *1000701.*

See *Acetonitrile R*.

Acetonitrile used in chromatography complies with the following additional tests.

Minimum transmittance (*2.2.25*) using *water R* as compensation liquid: 98 per cent from 240 nm.

Content (*2.2.28*): minimum 99.8 per cent.

Acetonitrile R1. *1000702.*

Complies with the requirements prescribed for *acetonitrile R* and with the following additional requirements.

Content: minimum 99.9 per cent.

Absorbance (*2.2.25*): maximum 0.10, determined at 200 nm using *water R* as the compensation liquid.

Acetoxyvalerenic acid. $C_{17}H_{24}O_4$. (M_r 292.4). *1165800.* [81397-67-3]. (2*E*)-3-[(1*RS*,4*S*,7*R*,7a*R*)-1-(Acetyloxy)-3,7-dimethyl-2,4,5,6,7,7a-hexahydro-1*H*-inden-4-yl]-2-methylprop-2-enoic acid.

Colourless or pale yellow viscous oil.

Absorbance (*2.2.25*). A solution in *methanol R* shows an absorption maximum at about 216 nm.

Acetylacetamide. $C_4H_7NO_2$. (M_r 101.1). *1102600.* [5977-14-0]. 3-Oxobutanamide.

mp: 53 °C to 56 °C.

Acetylacetone. $C_5H_8O_2$. (M_r 100.1). *1000900.* [123-54-6]. 2,4-Pentanedione.

Colourless or slightly yellow, easily flammable liquid, freely soluble in water, miscible with acetone, with ethanol (96 per cent) and with glacial acetic acid.

n_D^{20}: 1.452 to 1.453.

bp: 138 °C to 140 °C.

Acetylacetone reagent R1. *1000901.*

To 100 mL of *ammonium acetate solution R* add 0.2 mL of *acetylacetone R*.

Acetylacetone reagent R2. *1000902.*

Dissolve 0.2 mL of *acetylacetone R*, 3 mL of *glacial acetic acid R* and 25 g of *ammonium acetate R* in *water R* and dilute to 100 mL with the same solvent.

***N*-Acetyl-ε-caprolactam.** $C_8H_{13}NO_2$. (M_r 155.2). *1102700.* [1888-91-1]. *N*-Acetylhexane-6-lactam.

Colourless liquid, miscible with anhydrous ethanol.

d_{20}^{20}: about 1.100.

n_D^{20}: about 1.489.

bp: about 135 °C.

Acetyl chloride. C_2H_3ClO. (M_r 78.5). *1000800.* [75-36-5].

Clear, colourless liquid, flammable, decomposes in contact with water and with ethanol (96 per cent), miscible with ethylene chloride.

d_{20}^{20}: about 1.10.

Distillation range (*2.2.11*). Not less than 95 per cent distils between 49 °C and 53 °C.

Acetylcholine chloride. $C_7H_{16}ClNO_2$. (M_r 181.7). *1001000.* [60-31-1].

Crystalline powder, very soluble in cold water and in ethanol (96 per cent). It decomposes in hot water and in alkalis.

Storage: at − 20 °C.

Acetyleugenol. $C_{12}H_{14}O_3$. (M_r 206.2). *1100700.* [93-28-7]. 2-Methoxy-4-(2-propenyl)phenylacetate.

Yellow coloured, oily liquid, practically insoluble in water, freely soluble in ethanol (96 per cent).

n_D^{20}: about 1.521.

bp: 281 °C to 282 °C.

Acetyleugenol used in gas chromatography complies with the following additional test.

Assay. Gas chromatography (*2.2.28*) as prescribed in the monograph *Clove oil (1091)*.

Test solution. The substance to be examined.

Content: minimum 98.0 per cent, calculated by the normalisation procedure.

***N*-Acetylglucosamine.** $C_8H_{15}NO_6$. (M_r 221.2). *1133600.* [7512-17-6]. 2-(Acetylamino)-2-deoxy-D-glucopyranose.

mp: about 202 °C.

Acetyl-11-keto-β-boswellic acid. $C_{32}H_{48}O_5$. (M_r 512.7). *1167700.* [67416-61-9]. 3α-(Acetyloxy)-11-oxours-12-en-24-oic acid. (4β)-3α-(Acetyloxy)-11-oxours-12-en-23-oic acid.

White or almost white powder, insoluble in water, soluble in acetone, in anhydrous ethanol and in methanol.

mp: 271 °C to 274 °C.

Acetyl-11-keto-β-boswellic acid used in liquid chromatography complies with the following additional test.

Assay. Liquid chromatography (*2.2.29*) as prescribed in the monograph on *Indian frankincense (2310)*.

Content: minimum 90 per cent, calculated by the normalisation procedure.

***N*-Acetylneuraminic acid.** $C_{11}H_{19}NO_9$. (M_r 309.3). *1001100.* [131-48-6]. *O*-Sialic acid.

White or almost white acicular crystals, soluble in water and in methanol, slightly soluble in anhydrous ethanol, practically insoluble in acetone.

$[\alpha]_D^{20}$: about − 36, determined on a 10 g/L solution.

mp: about 186 °C, with decomposition.

***N*-Acetyltryptophan.** $C_{13}H_{14}N_2O_3$. (M_r 246.3). *1102800.* [1218-34-4]. 2-Acetylamino-3-(indol-3-yl)propanoic acid.

White or almost white powder or colourless crystals, slightly soluble in water. It dissolves in dilute solutions of alkali hydroxides.

mp: about 205 °C.

Assay. Liquid chromatography (*2.2.29*) as prescribed in the monograph *Tryptophan (1272)*.

Test solution. Dissolve 10.0 mg in a mixture of 10 volumes of *acetonitrile R* and 90 volumes of *water R* and dilute to 100.0 mL with the same mixture of solvents.

Content: minimum 99.0 per cent, calculated by the normalisation procedure.

Acetyltyrosine ethyl ester. $C_{13}H_{17}NO_4,H_2O$. (M_r 269.3). *1001200.* [36546-50-6]. *N*-Acetyl-L-tyrosine ethyl ester monohydrate. Ethyl (*S*)-2-acetamido-3-(4-hydroxyphenyl)propionate monohydrate.

White or almost white, crystalline powder suitable for the assay of chymotrypsin.

$[\alpha]_D^{20}$: + 21 to + 25, determined on a 10 g/L solution in *ethanol (96 per cent) R*.

$A_{1\,cm}^{1\%}$: 60 to 68, determined at 278 nm in *ethanol (96 per cent) R*.

Acetyltyrosine ethyl ester, 0.2 M. *1001201.*

Dissolve 0.54 g of *acetyltyrosine ethyl ester R* in *ethanol (96 per cent) R* and dilute to 10.0 mL with the same solvent.

Acid blue 83. $C_{45}H_{44}N_3NaO_7S_2$. (M_r 826). *1012200.* [6104-59-2].

Colour Index No. 42660.
Brilliant blue. Coomassie brilliant blue R 250.

Brown powder insoluble in cold water, slightly soluble in boiling water and in anhydrous ethanol, soluble in sulfuric acid, glacial acetic acid and in dilute solutions of alkali hydroxides.

Acid blue 90. $C_{47}H_{48}N_3NaO_7S_2$. (M_r 854). *1001300.* [6104-58-1].

Colour Index No. 42655.
Sodium [4-[[4-[(4-ethoxyphenyl)amino]phenyl][[4-(ethyl)(3-sulfonatobenzyl)amino]phenyl]methylene]cyclo-hexa-2,5-dien-1-ylidene](ethyl)-(3-sulfonatobenzyl)ammonium.

A dark brown powder, with a violet sheen and some particles having a metallic lustre, soluble in water and in anhydrous ethanol.

$A_{1\,cm}^{1\%}$: greater than 500, determined at 577 nm in a 0.01 g/L solution in buffer solution pH 7.0 and calculated with reference to the dried substance.

Loss on drying (*2.2.32*): maximum 5.0 per cent, determined on 0.500 g by drying in an oven at 105 °C.

Acid blue 92. $C_{26}H_{16}N_3Na_3O_{10}S_3$. ($M_r$ 696). *1001400.* [3861-73-2].

Colour Index No. 13390.
Coomassie blue. Anazolene sodium. Trisodium 8-hydroxy-4′-(phenylamino)azonaphthalene-3,5′,6-trisulfonate.

Dark blue crystals, soluble in water, in acetone and in ethylene glycol monoethylether, slightly soluble in ethanol (96 per cent).

Acid blue 92 solution. *1001401.*

Dissolve 0.5 g of *acid blue 92 R* in a mixture of 10 mL of *glacial acetic acid R*, 45 mL of *ethanol (96 per cent) R* and 45 mL of *water R*.

Acid blue 93. $C_{37}H_{27}N_3Na_2O_9S_3$. ($M_r$ 800). *1134200.* [28983-56-4].

Colour Index No. 42780.
Methyl blue. Poirrier blue.

Mixture of triphenylrosaniline di- and trisulfonate and of triphenylpararosaniline.

Dark blue powder.

Colour change: pH 9.4 to pH 14.0.

Acid blue 93 solution. *1134201.*

Dissolve 0.2 g of *acid blue 93 R* in *water R* and dilute to 100 mL with the same solvent.

α1-Acid-glycoprotein silica gel for chiral separation. *1148700.*

A very finely divided silica gel for chromatography consisting of spherical particles coated with α1-acid glycoprotein. The particle size is indicated after the name of the reagent in the tests where it is used.

Acrylamide. C_3H_5NO. (M_r 71.1). *1001500.* [79-06-1]. Propenamide.

Colourless or white flakes or a white or almost white, crystalline powder, very soluble in water and in methanol, freely soluble in anhydrous ethanol.

mp: about 84 °C.

30 per cent acrylamide/bisacrylamide (29:1) solution. *1001501.*

Prepare a solution containing 290 g of *acrylamide R* and 10 g of *methylenebisacrylamide R* per litre of *water R*. Filter.

30 per cent acrylamide/bisacrylamide (36.5:1) solution. *1001502.*

Prepare a solution containing 292 g of *acrylamide R* and 8 g of *methylenebisacrylamide R* per litre of *water R*. Filter.

Acrylic acid. $C_3H_4O_2$. (M_r 72.1). *1133700.* [79-10-7]. Prop-2-enoic acid. Vinylformic acid.

Content: minimum 99 per cent.

It is stabilised with 0.02 per cent of hydroquinone monomethyl ether.

Corrosive liquid, miscible with water and ethanol (96 per cent). It polymerises readily in the presence of oxygen.

d_{20}^{20}: about 1.05.

n_D^{20}: about 1.421.

bp: about 141 °C.

mp: 12 °C to 15 °C.

Actein. $C_{37}H_{56}O_{11}$. (M_r 677). *1181500.* [18642-44-9]. (23*R*,24*R*,25*S*,26*S*)-3β-(β-D-Xylopyranosyloxy)-16β,23:23,26:24,25-triepoxy-26-hydroxy-9,19-cyclolanostan-12β-yl acetate.

Acteoside. $C_{29}H_{36}O_{15}$. (M_r 624.6). *1145100.* [61276-17-3]. 2-(3,4-Dihydroxyphenyl)ethyl 3-*O*-(6-deoxy-α-L-mannopyranosyl)-4-*O*-[(2*E*)-3-(3,4-dihydroxyphenyl)prop-2-enoyl]-β-D-glucopyranoside. Verbascoside.

Light yellowish powder, freely soluble in water and in methanol.

mp: about 140 °C, with decomposition.

Adamantane. $C_{10}H_{16}$. (M_r 136.2). *1181600.* [281-23-2]. Tricyclo[3.3.1.1^{3,7}]decane.

mp: about 270 °C.

Adenine. *1172800.* [73-24-5].

See *Adenine (0800)*.

Adenosine. $C_{10}H_{13}N_5O_4$. (M_r 267.2). *1001600.* [58-61-7]. 6-Amino-9-β-D-ribofuranosyl-9*H*-purine.

White or almost white, crystalline powder, slightly soluble in water, practically insoluble in acetone and in ethanol (96 per cent). It dissolves in dilute solutions of acids.

mp: about 234 °C.

Adipic acid. $C_6H_{10}O_4$. (M_r 146.1). *1095600.* [124-04-9].

Prisms, freely soluble in methanol, soluble in acetone, practically insoluble in light petroleum.

mp: about 152 °C.

Adrenaline. $C_9H_{13}NO_3$. (M_r 183.2). *1155000.* [51-43-4]. (1*R*)-1-(3,4-Dihydroxyphenyl)-2-(methylamino)ethanol. 4-[(1*R*)-1-hydroxy-2-(methylamino)ethyl]benzene-1,2-diol.

White or almost white powder, gradually becoming brown on exposure to light and air, very slightly soluble in water and in ethanol (96 per cent), insoluble in acetone. It dissolves in dilute solutions of mineral acids and alkali hydroxides.

mp: about 215 °C.

Adrenalone hydrochloride. $C_9H_{12}ClNO_3$. (M_r 217.7). *1155100.* [62-13-5]. 1-(3,4-Dihydroxyphenyl)-2-(methylamino)ethanone hydrochloride. 3′,4′-Dihydroxy-2-(methylamino)acetophenone hydrochloride.

Pale yellow crystals, freely soluble in water, soluble in ethanol (96 per cent).

mp: about 244 °C.

Aescin. *1001700.* [6805-41-0].

A mixture of related saponins obtained from the seeds of *Aesculus hippocastanum* L.

Fine, almost white or slightly reddish or yellowish, amorphous powder.

Chromatography. Thin-layer chromatography (*2.2.27*) as prescribed in the monograph *Senega root (0202)*: apply 20 µL of the solution; after spraying with *anisaldehyde solution R* and heating, the chromatogram shows a principal band with an R_F of about 0.4.

Aflatoxin B_1. $C_{17}H_{12}O_6$. (M_r 312.3). *1166000.* [1162-65-8]. (6a*R*,9a*S*)-4-Methoxy-2,3,6a,9a-tetrahydro-cyclopenta[*c*]furo[3′,2′:4,5]furo[2,3-*h*][1]benzopyran-1,11-dione.

White or faint yellow crystals.

Agarose/cross-linked polyacrylamide. *1002200.*

Agarose trapped within a cross-linked polyacrylamide network; it is used for the separation of globular proteins with relative molecular masses of 2×10^4 to 35×10^4.

Agarose-DEAE for ion-exchange chromatography. *1002100.* [57407-08-6].

Cross-linked agarose substituted with diethylaminoethyl groups, presented as beads.

Agarose for chromatography. *1001800.* [9012-36-6].

Swollen beads 60-140 µm in diameter presented as a 4 per cent suspension in *water R*.

Used in size-exclusion chromatography for the separation of proteins with relative molecular masses of 6×10^4 to 20×10^6 and of polysaccharides with relative molecular masses of 3×10^3 to 5×10^6.

Agarose for chromatography, cross-linked. *1001900.* [61970-08-9].

Prepared from agarose by reaction with 2,3-dibromopropanol in strongly alkaline conditions.

It occurs as swollen beads 60-140 µm in diameter and is presented as a 4 per cent suspension in *water R*.

Used in size-exclusion chromatography for the separation of proteins with relative molecular masses of 6×10^4 to 20×10^6 and of polysaccharides with relative molecular masses of 3×10^3 to 5×10^6.

Agarose for chromatography, cross-linked R1. *1001901.* [65099-79-8].

Prepared for agarose by reaction with 2,3-dibromopropanol in strongly alkaline conditions.

It occurs as swollen beads 60-140 µm in diameter and is presented as a 4 per cent suspension in *water R*.

Used in size-exclusion chromatography for the separation of proteins with relative molecular masses of 7×10^4 to 40×10^6 and of polysaccharides with relative molecular masses of 1×10^5 to 2×10^7.

Agarose for electrophoresis. *1002000.* [9012-36-6].

A neutral, linear polysaccharide, the main component of which is derived from agar.

White or almost white powder, practically insoluble in cold water, very slightly soluble in hot water.

Agnuside. $C_{22}H_{26}O_{11}$. (M_r 466.4). *1162000.* [11027-63-7]. (1*RS*,4a*SR*,5*RS*,7a*RS*)-5-Hydroxy-7-[[(4-hydroxybenzoyl)oxy]methyl]-1,4a,5,7a-tetrahydrocyclopenta[*c*]pyran-1-yl β-D-glucopyranoside.

White or almost white crystals.

Alanine. *1102900.* [56-41-7].

See *Alanine (0752)*.

β-Alanine. *1004500.* [107-95-9].

See *3-aminopropionic acid R*.

Albumin, bovine. *1002300.* [9048-46-8].

Bovine serum albumin containing about 96 per cent of protein.

White to light brownish-yellow powder.

Water (*2.5.12*): maximum 3.0 per cent, determined on 0.800 g.

Albumin, bovine R1. *1183500.* [9048-46-8].

Bovine serum albumin containing about 96 per cent of protein.

White or light brownish-yellow powder.

Albumin, human. *1133800.*

Human serum albumin containing not less than 96 per cent of albumin.

Albumin solution, human. *1002400.* [9048-46-8].

See *Human albumin solution (0255)*.

Albumin solution, human R1. *1002401.*

Dilute *human albumin solution R* with a 9 g/L solution of *sodium chloride R* to a concentration of 1 g/L of protein. Adjust the pH to 3.5-4.5 with *glacial acetic acid R*.

Alcohol. *1002500.* [64-17-5].

See *Ethanol (96 per cent) R*.

Alcohol (*x* per cent *V/V*). *1002502.*

See *Ethanol (x per cent V/V) R*.

Alcohol, aldehyde-free. *1002501.*

Mix 1200 mL of *ethanol (96 per cent) R* with 5 mL of a 400 g/L solution of *silver nitrate R* and 10 mL of a cooled 500 g/L solution of *potassium hydroxide R*. Shake, allow to stand for a few days and filter. Distil the filtrate immediately before use.

Aldehyde dehydrogenase. *1103000.*

Enzyme obtained from baker's yeast which oxidises acetaldehyde to acetic acid in the presence of nicotinamide-adenine dinucleotide, potassium salts and thiols, at pH 8.0.

Aldehyde dehydrogenase solution. *1103001.*

Dissolve in *water R* a quantity of *aldehyde dehydrogenase R*, equivalent to 70 units and dilute to 10 mL with the same solvent. This solution is stable for 8 h at 4 °C.

Aldrin. $C_{12}H_8Cl_6$. (M_r 364.9). *1123100.* [309-00-2].

bp: about 145 °C.

mp: about 104 °C.

A suitable certified reference solution (10 ng/µL in cyclohexane) may be used.

Aleuritic acid. $C_{16}H_{32}O_5$. (M_r 304.4). *1095700.* [533-87-9]. (9*RS*,10*SR*)-9,10,16-Trihydroxyhexadecanoic acid.

White or almost white powder, greasy to the touch, soluble in methanol.

mp: about 101 °C.

Alizarin S. $C_{14}H_7NaO_7S,H_2O$. (M_r 360.3). *1002600.* [130-22-3].

Schultz No. 1145.

Colour Index No. 58005.
Sodium 1,2-dihydroxyanthraquinone-3-sulfonate monohydrate. Sodium 3,4-dihydroxy-9,10-dioxo-9,10-dihydroanthracene-2-sulfonate monohydrate.

Orange-yellow powder, freely soluble in water and in ethanol (96 per cent).

Alizarin S solution. *1002601.*

A 1 g/L solution.

Test for sensitivity. If alizarin S solution is used for the standardisation of *0.05 M barium perchlorate*, it shows a colour change from yellow to orange-red when it is tested according to the standardisation of *0.05 M barium perchlorate*.

Colour change: pH 3.7 (yellow) to pH 5.2 (violet).

Alovudine. $C_{10}H_{13}FN_2O_4$. (M_r 244.2). *1185400.* [25526-93-6]. 1-[(2*R*,4*S*,5*R*)-4-Fluoro-5-(hydroxymethyl)tetrahydrofuran-2-yl]-5-methylpyrimidine-2,4(1*H*,3*H*)-dione. Fluorodeoxythymidine. 3′-Deoxy-3′-fluorothymidine.

Content: minimum 95 per cent.

Colourless crystals.

Aluminium. Al. (A_r 26.98). *1118200.* [7429-90-5].

White or almost white, malleable, flexible, bluish metal, available as bars, sheets, powder, strips or wire. In moist air an oxide film forms which protects the metal from corrosion.

Analytical grade.

Aluminium chloride. $AlCl_3,6H_2O$. (M_r 241.4). *1002700.* [7784-13-6]. Aluminium chloride hexahydrate.

Content: minimum 98.0 per cent of $AlCl_3,6H_2O$.

White or slightly yellowish, crystalline powder, hygroscopic, freely soluble in water and in ethanol (96 per cent).

Storage: in an airtight container.

Aluminium chloride reagent. *1002702.*

Dissolve 2.0 g of *aluminium chloride R* in 100 mL of a 5 per cent *V/V* solution of *glacial acetic acid R* in *methanol R*.

Aluminium chloride solution. *1002701.*

Dissolve 65.0 g of *aluminium chloride R* in *water R* and dilute to 100 mL with the same solvent. Add 0.5 g of *activated charcoal R*, stir for 10 min, filter and add to the filtrate, with continuous stirring, sufficient of a 10 g/L solution of *sodium hydroxide R* (about 60 mL) to adjust the pH to about 1.5.

Aluminium nitrate. $Al(NO_3)_3,9H_2O$. (M_r 375.1). *1002800.* [7784-27-2]. Aluminium nitrate nonahydrate.

Crystals, deliquescent, very soluble in water and ethanol (96 per cent), very slightly soluble in acetone.

Storage: in an airtight container.

Aluminium oxide, anhydrous. *1002900.* [1344-28-1].

Aluminium oxide, consisting of γ-Al_2O_3, dehydrated and activated by heat treatment.

Particle size: 75 µm to 150 µm.

Aluminium oxide, basic. *1118300.*

A basic grade of *anhydrous aluminium oxide R* suitable for column chromatography.

pH (*2.2.3*). Shake 1 g with 10 mL of *carbon dioxide-free water R* for 5 min. The pH of the suspension is 9 to 10.

Aluminium oxide, neutral. *1118400.*

See *Aluminium oxide, hydrated (0311)*.

Aluminium potassium sulfate. *1003000.* [7784-24-9].

See *Alum (0006)*.

Americium-243 spiking solution. *1167500.*

Contains 50 Bq/L ^{243}Am and a 134 g/L solution of *lanthanum chloride heptahydrate R* in a 103 g/L solution of *hydrochloric acid R*.

Amido black 10B. $C_{22}H_{14}N_6Na_2O_9S_2$. ($M_r$ 617). *1003100.* [1064-48-8].

Schultz No. 299.

Colour Index No. 20470.
Disodium 5-amino-4-hydroxy-6-[(4-nitrophenyl)azo]-3-(phenylazo)naphthalene-2,7-disulfonate.

Dark-brown to black powder, sparingly soluble in water, soluble in ethanol (96 per cent).

Amido black 10B solution. *1003101.*

A 5 g/L solution of *amido black 10B R* in a mixture of 10 volumes of *acetic acid R* and 90 volumes of *methanol R*.

Aminoazobenzene. $C_{12}H_{11}N_3$. (M_r 197.2). *1003200.* [60-09-3].

Colour Index No. 11000.
4-(Phenylazo)aniline.

Brownish-yellow needles with a bluish tinge, slightly soluble in water, freely soluble in ethanol (96 per cent).

mp: about 128 °C.

2-Aminobenzoic acid. $C_7H_7NO_2$. (M_r 137.1). *1003400.* [118-92-3]. Anthranilic acid.

A white or pale-yellow, crystalline powder, sparingly soluble in cold water, freely soluble in hot water, in ethanol (96 per cent) and in glycerol. Solutions in ethanol (96 per cent) or in ether and, particularly, in glycerol show a violet fluorescence.

mp: about 145 °C.

3-Aminobenzoic acid. $C_7H_7NO_2$. (M_r 137.1). *1147400.* [99-05-8].

White or almost white crystals. An aqueous solution turns brown on standing in air.

mp: about 174 °C.

Storage: in an airtight container, protected from light.

4-Aminobenzoic acid. $C_7H_7NO_2$. (M_r 137.1). *1003300.* [150-13-0].

White or almost white, crystalline powder, slightly soluble in water, freely soluble in ethanol (96 per cent), practically insoluble in light petroleum.

mp: about 187 °C.

Chromatography. Thin-layer chromatography (*2.2.27*) as prescribed in the monograph *Procaine hydrochloride (0050)*; the chromatogram shows only one principal spot.

Storage: protected from light.

4-Aminobenzoic acid solution. *1003301.*

Dissolve 1 g of *4-aminobenzoic acid R* in a mixture of 18 mL of *anhydrous acetic acid R*, 20 mL of *water R* and 1 mL of *phosphoric acid R*. Immediately before use, mix 2 volumes of the solution with 3 volumes of *acetone R*.

***N*-(4-Aminobenzoyl)-L-glutamic acid.** $C_{12}H_{14}N_2O_5$. (M_r 266.3). *1141700.* [4271-30-1]. ABGA. (2*S*)-2-[(4-Aminobenzoyl)amino]pentanedioic acid.

White or almost white, crystalline powder.

mp: about 175 °C, with decomposition.

4-Aminobutanoic acid. $C_4H_9NO_2$. (M_r 103.1). *1123200.* [56-12-2]. γ-Aminobutyric acid. GABA.

Leaflets from methanol and ether, needles from water and ethanol (96 per cent). Freely soluble in water, practically insoluble or slightly soluble in other solvents.

mp: about 202 °C (decreases on rapid heating).

Aminobutanol. $C_4H_{11}NO$. (M_r 89.1). *1003500.* [5856-63-3]. 2-Aminobutanol.

Oily liquid, miscible with water, soluble in ethanol (96 per cent).

d_{20}^{20}: about 0.94.

n_D^{20}: about 1.453.

bp: about 180 °C.

Aminochlorobenzophenone. $C_{13}H_{10}ClNO$. (M_r 231.7). *1003600.* [719-59-5]. 2-Amino-5-chlorobenzophenone.

Yellow, crystalline powder, practically insoluble in water, freely soluble in acetone, soluble in ethanol (96 per cent).

mp: about 97 °C.

Content: minimum 95.0 per cent.

Storage: protected from light.

4-Aminofolic acid. $C_{19}H_{20}N_8O_5$. (M_r 440.4). *1163700.* [54-62-6]. (2*S*)-2-[[4-[[(2,4-Diaminopteridin-6-yl)methyl]amino]benzoyl]amino]pentanedioic acid. *N*-[4-[[(2,4-Diaminopteridin-6-yl)methyl]amino]benzoyl]-L-glutamic acid. Aminopterine.

Yellowish powder.

mp: about 230 °C.

6-Aminohexanoic acid. $C_6H_{13}NO_2$. (M_r 131.2). *1103100.* [60-32-2].

Colourless crystals, freely soluble in water, sparingly soluble in methanol, practically insoluble in anhydrous ethanol.

mp: about 205 °C.

Aminohippuric acid. $C_9H_{10}N_2O_3$. (M_r 194.2). *1003700.* [61-78-9]. (4-Aminobenzamido)acetic acid.

White or almost white powder, sparingly soluble in water, soluble in ethanol (96 per cent).

mp: about 200 °C.

Aminohippuric acid reagent. *1003701.*

Dissolve 3 g of *phthalic acid R* and 0.3 g of *aminohippuric acid R* in *ethanol (96 per cent) R* and dilute to 100 mL with the same solvent.

Aminohydroxynaphthalenesulfonic acid. $C_{10}H_9NO_4S$. (M_r 239.3). *1112400.* [116-63-2]. 4-Amino-3-hydroxynaphthalene-1-sulfonic acid.

White or grey needles, turning pink on exposure to light, especially when moist, practically insoluble in water and in ethanol (96 per cent), soluble in solutions of alkali hydroxides and in hot solutions of sodium metabisulfite.

Storage: protected from light.

Aminohydroxynaphthalenesulfonic acid solution. *1112401.*

Mix 5.0 g of *anhydrous sodium sulfite R* with 94.3 g of *sodium hydrogensulfite R* and 0.7 g of *aminohydroxynaphthalenesulfonic acid R*. Dissolve 1.5 g of the mixture in *water R* and dilute to 10.0 mL with the same solvent. Prepare the solution daily.

***cis*-Aminoindanol.** $C_9H_{11}NO$. (M_r 149.2). *1168300.* [126456-43-7]. (1*S*,2*R*)-1-Amino-2,3-dihydro-1*H*-inden-2-ol. (−)-*cis*-1-Aminoindan-2-ol.

Content: minimum 98.0 per cent (sum of enantiomers, determined by gas chromatography).

$[\alpha]_D^{20}$: − 69 to − 59, determined on a 2 g/L solution in *chloroform R*.

mp: 118 °C to 122 °C.

Aminomethylalizarindiacetic acid. $C_{19}H_{15}NO_8,2H_2O$. (M_r 421.4). *1003900.* [3952-78-1]. 2,2′-[(3,4-dihydroxy-anthraquinon-3-yl)methylenenitrilo]diacetic acid dihydrate. Alizarin complexone dihydrate.

Fine, pale brownish-yellow or orange-brown powder, practically insoluble in water, soluble in solutions of alkali hydroxides.

mp: about 185 °C.

Loss on drying (*2.2.32*): maximum 10.0 per cent, determined on 1.000 g.

Aminomethylalizarindiacetic acid reagent. *1003901.*

Solution A. Dissolve 0.36 g of *cerous nitrate R* in *water R* and dilute to 50 mL with the same solvent.

Solution B. Suspend 0.7 g of *aminomethylalizarindiacetic acid R* in 50 mL of *water R*. Dissolve with the aid of about 0.25 mL of *concentrated ammonia R*, add 0.25 mL of *glacial acetic acid R* and dilute to 100 mL with *water R*.

Solution C. Dissolve 6 g of *sodium acetate R* in 50 mL of *water R*, add 11.5 mL of *glacial acetic acid R* and dilute to 100 mL with *water R*.

To 33 mL of *acetone R* add 6.8 mL of solution C, 1.0 mL of solution B and 1.0 mL of solution A and dilute to 50 mL with *water R*.

Test for sensitivity. To 1.0 mL of *fluoride standard solution (10 ppm F) R* add 19.0 mL of *water R* and 5.0 mL of the aminomethylalizarindiacetic acid reagent. After 20 min, the solution assumes a blue colour.

Storage: use within 5 days.

Aminomethylalizarindiacetic acid solution. *1003902.*

Dissolve 0.192 g of *aminomethylalizarindiacetic acid R* in 6 mL of freshly prepared *1 M sodium hydroxide*. Add 750 mL of *water R*, 25 mL of *succinate buffer solution pH 4.6 R* and, dropwise, *0.5 M hydrochloric acid* until the colour changes from violet-red to yellow (pH 4.5 to 5). Add 100 mL of *acetone R* and dilute to 1000 mL with *water R*.

4-Aminomethylbenzoic acid. $C_8H_9NO_2$. (M_r 151.2). *1167800.* [56-91-7].

Aminonitrobenzophenone. $C_{13}H_{10}N_2O_3$. (M_r 242.2). *1004000.* [1775-95-7]. 2-Amino-5-nitrobenzophenone.

Yellow, crystalline powder, practically insoluble in water, soluble in tetrahydrofuran, slightly soluble in methanol.

mp: about 160 °C.

$A_{1\,cm}^{1\%}$: 690 to 720, determined at 233 nm using a 0.01 g/L solution in *methanol R*.

6-Aminopenicillanic acid. $C_8H_{12}N_2O_3S$. (M_r 216.3). *1162100.* [551-16-6]. (2*S*,5*R*,6*R*)-6-Amino-3,3-dimethyl-7-oxo-4-thia-1-azabicyclo[3.2.0]heptane-2-carboxylic acid.

Appearance: white or almost white powder.

mp: about 205 °C, with decomposition.

Aminophenazone. $C_{13}H_{17}N_3O$. (231.3). *1133900.* [58-15-1]. 4-(Dimethylamino)-1,5-dimethyl-2-phenyl-1,2-dihydro-3*H*-pyrazol-3-one.

White or almost white, crystalline powder or colourless crystals, soluble in water, freely soluble in ethanol (96 per cent).

mp: about 108 °C.

2-Aminophenol. C_6H_7NO. (M_r 109.1). *1147500.* [95-55-6].

Pale yellowish-brown crystals which rapidly become brown, sparingly soluble in water, soluble in ethanol (96 per cent).

mp: about 172 °C.

Storage: in an airtight container, protected from light.

3-Aminophenol. C_6H_7NO. (M_r 109.1). *1147600.* [591-27-5].

Pale yellowish-brown crystals, sparingly soluble in water.

mp: about 122 °C.

4-Aminophenol. C_6H_7NO. (M_r 109.1). *1004300.* [123-30-8].

Content: minimum 95 per cent.

White or slightly coloured, crystalline powder, becoming coloured on exposure to air and light, sparingly soluble in water, soluble in anhydrous ethanol.

mp: about 186 °C, with decomposition.

Storage: protected from light.

Aminopolyether. $C_{18}H_{36}N_2O_6$. (M_r 376.5). *1112500.* [23978-09-8]. 4,7,13,16,21,24-hexaoxa-1,10-diazabicyclo[8,8,8]hexacosane.

mp: 70 °C to 73 °C.

3-Aminopropanol. C_3H_9NO. (M_r 75.1). *1004400.* [156-87-6]. 3-Aminopropan-1-ol. Propanolamine.

Clear, colourless, viscous liquid.

d_{20}^{20}: about 0.99.

n_D^{20}: about 1.461.

mp: about 11 °C.

3-Aminopropionic acid. $C_3H_7NO_2$. (M_r 89.1). *1004500.* [107-95-9]. β-Alanine.

Content: minimum 99 per cent.

White or almost white, crystalline powder, freely soluble in water, slightly soluble in ethanol (96 per cent), practically insoluble in acetone.

mp: about 200 °C, with decomposition.

Aminopyrazolone. $C_{11}H_{13}N_3O$. (M_r 203.2). *1004600.* [83-07-8]. 4-Amino-2,3-dimethyl-1-phenylpyrazolin-5-one.

Light-yellow needles or powder, sparingly soluble in water, freely soluble in ethanol (96 per cent).

mp: about 108 °C.

Aminopyrazolone solution. *1004601.*

A 1 g/L solution in *buffer solution pH 9.0 R*.

3-Aminosalicylic acid. $C_7H_7NO_3$. (M_r 153.1). *1183600.* [570-23-0]. 3-Amino-2-hydroxybenzoic acid.

mp: about 240 °C.

Slightly soluble in water.

4-Aminosalicylic acid. $C_7H_7NO_3$. (M_r 153.1). *1183700.* [65-49-6]. 4-Amino-2-hydroxybenzoic acid.

White or almost white, bulky powder, slightly soluble in water, soluble in ethanol (96 per cent), in dilute nitric acid and in sodium hydroxide. It darkens on exposure to air and light.

mp: 135 °C to 145 °C.

Storage: at a temperature not exceeding 30 °C, in an airtight container, protected from light.

Ammonia, concentrated. *1004700.*

See *Concentrated ammonia solution (0877)*.

Ammonia. *1004701.*

Content: 170 g/L to 180 g/L of NH_3 (M_r 17.03).

Dilute 67 g of *concentrated ammonia R* to 100 mL with *water R*.

d_{20}^{20}: 0.931 to 0.934.

When used in the test for iron, *ammonia R* complies with the following additional requirement. Evaporate 5 mL of ammonia to dryness on a water-bath, add 10 mL of *water R*, 2 mL of a 200 g/L solution of *citric acid R* and 0.1 mL of *thioglycollic acid R*. Make alkaline by adding *ammonia R* and dilute to 20 mL with *water R*. No pink colour develops.

Storage: protected from atmospheric carbon dioxide, at a temperature below 20 °C.

Ammonia, dilute R1. *1004702.*

Content: 100 g/L to 104 g/L of NH_3 (M_r 17.03).

Dilute 41 g of *concentrated ammonia R* to 100 mL with *water R*.

Ammonia, dilute R2. *1004703.*

Content: 33 g/L to 35 g/L of NH_3 (M_r 17.03).

Dilute 14 g of *concentrated ammonia R* to 100 mL with *water R*.

Ammonia, dilute R3. *1004704.*

Content: 1.6 g/L to 1.8 g/L of NH_3 (M_r 17.03).

Dilute 0.7 g of *concentrated ammonia R* to 100 mL with *water R*.

Ammonia, dilute R4. *1004706.*

Content: 8.4 g/L to 8.6 g/L of NH_3 (M_r 17.03).

Dilute 3.5 g of *concentrated ammonia R* to 100 mL with *water R*.

Ammonia, lead-free. *1004705.*

Complies with the requirements prescribed for *dilute ammonia R1* with the following additional test: to 20 mL of lead-free ammonia, add 1 mL of *lead-free potassium cyanide solution R*, dilute to 50 mL with *water R* and add 0.10 mL of *sodium sulfide solution R*. The solution is not more intensely coloured than a reference solution prepared without sodium sulfide.

Ammonia, concentrated R1. *1004800.*

Content: minimum 32.0 per cent *m/m* of NH_3 (M_r 17.03).

A clear, colourless liquid.

d_{20}^{20}: 0.883 to 0.889.

Assay. Weigh accurately a ground-glass-stoppered flask containing 50.0 mL of *1 M hydrochloric acid*. Introduce 2 mL of the concentrated ammonia and weigh again. Titrate the solution with *1 M sodium hydroxide*, using 0.5 mL of *methyl red mixed solution R* as indicator.

1 mL of *1 M hydrochloric acid* is equivalent to 17.03 mg of NH_3.

Storage: protected from atmospheric carbon dioxide, at a temperature below 20 °C.

Ammonium acetate. $C_2H_7NO_2$. (M_r 77.1). *1004900.* [631-61-8].

Colourless crystals, very deliquescent, very soluble in water and in ethanol (96 per cent).

Storage: in an airtight container.

Ammonium acetate solution. *1004901.*

Dissolve 150 g of *ammonium acetate R* in *water R*. Add 3 mL of *glacial acetic acid R* and dilute to 1000 mL with *water R*.

Storage: use within 1 week.

Ammonium and cerium nitrate. $(NH_4)_2Ce(NO_3)_6$. (M_r 548.2). *1005000.* [16774-21-3].

Orange-yellow, crystalline powder, or orange transparent crystals, soluble in water.

Ammonium and cerium sulfate. $(NH_4)_4Ce(SO_4)_4,2H_2O$. (M_r 633). *1005100.* [10378-47-9].

Orange-yellow, crystalline powder or crystals, slowly soluble in water.

(1*R*)-(–)-Ammonium 10-camphorsulfonate. $C_{10}H_{19}NO_4S$. (M_r 249.3). *1103200.*

Content: minimum 97.0 per cent of (1*R*)-(–)-ammonium 10-camphorsulfonate.

$[\alpha]_D^{20}$: – 18 ± 2, determined on a 50 g/L solution.

Ammonium carbamate. $CH_6N_2O_2$. (M_r 78.1). *1168400.* [1111-78-0]. Carbamic acid ammonium salt.

Ammonium carbonate. *1005200.* [506-87-6]. A mixture of varying proportions of ammonium hydrogen carbonate (NH_4HCO_3, M_r 79.1) and ammonium carbamate (NH_2COONH_4, M_r 78.1).

White or almost white translucent mass, slowly soluble in about 4 parts of water. It is decomposed by boiling water. Ammonium carbonate liberates not less than 30 per cent *m/m* of NH_3 (M_r 17.03).

Assay. Dissolve 2.00 g in 25 mL of *water R*. Slowly add 50.0 mL of *1 M hydrochloric acid*, titrate with *1 M sodium hydroxide*, using 0.1 mL of *methyl orange solution R* as indicator.

1 mL of *1 M hydrochloric acid* is equivalent to 17.03 mg of NH_3.

Storage: at a temperature below 20 °C.

Ammonium carbonate solution. *1005201.*

A 158 g/L solution.

Ammonium carbonate solution R1. *1005202.*

Dissolve 20 g of *ammonium carbonate R* in 20 mL of *dilute ammonia R1* and dilute to 100 mL with *water R*.

Ammonium chloride. *1005300.* [12125-02-9].

See *Ammonium chloride (0007)*.

Ammonium chloride solution. *1005301.*

A 107 g/L solution.

Ammonium citrate. $C_6H_{14}N_2O_7$. (M_r 226.2). *1103300.* [3012-65-5]. Diammonium hydrogen citrate.

White or almost white, crystalline powder or colourless crystals, freely soluble in water, slightly soluble in ethanol (96 per cent).

pH (*2.2.3*): about 4.3 for a 22.6 g/L solution.

Ammonium dihydrogen phosphate. $(NH_4)H_2PO_4$. (M_r 115.0). *1005400.* [7722-76-1]. Monobasic ammonium phosphate.

White or almost white, crystalline powder or colourless crystals, freely soluble in water.

pH (*2.2.3*): about 4.2 for a 23 g/L solution.

Ammonium formate. CH_5NO_2. (M_r 63.1). *1112600.* [540-69-2].

Deliquescent crystals or granules, very soluble in water, soluble in ethanol (96 per cent).

mp: 119 °C to 121 °C.

Storage: in an airtight container.

Ammonium hexafluorogermanate(IV). $(NH_4)_2GeF_6$. (M_r 222.7). *1134000.* [16962-47-3].

White or almost white crystals, freely soluble in water.

Ammonium hydrogen carbonate. NH_4HCO_3. (M_r 79.1). *1005500.* [1066-33-7].

Content: minimum 99 per cent.

Ammonium molybdate. $(NH_4)_6Mo_7O_{24},4H_2O$. (M_r 1236). *1005700.* [12054-85-2].

Colourless or slightly yellow or greenish crystals, soluble in water, practically insoluble in ethanol (96 per cent).

Ammonium molybdate reagent. *1005701.*

Mix, in the given order, 1 volume of a 25 g/L solution of *ammonium molybdate R*, 1 volume of a 100 g/L solution of *ascorbic acid R* and 1 volume of *sulfuric acid R* (294.5 g/L H_2SO_4). Add 2 volumes of *water R*.

Storage: use within 1 day.

Ammonium molybdate reagent R1. *1005706.*

Mix 10 mL of a 60 g/L solution of *disodium arsenate R*, 50 mL of *ammonium molybdate solution R*, 90 mL of *dilute sulfuric acid R* and dilute to 200 mL in *water R*.

Storage: in amber flasks at 37 °C for 24 h.

Ammonium molybdate reagent R2. *1005708.*

Dissolve 50 g of *ammonium molybdate R* in 600 mL of *water R*. To 250 mL of cold *water R* add 150 mL of *sulfuric acid R* and cool. Mix the 2 solutions together. *Storage*: use within 1 day.

Ammonium molybdate solution. *1005702.*

A 100 g/L solution.

Ammonium molybdate solution R2. *1005703.*

Dissolve 5.0 g of *ammonium molybdate R* with heating in 30 mL of *water R*. Cool, adjust the pH to 7.0 with *dilute ammonia R2* and dilute to 50 mL with *water R*.

Ammonium molybdate solution R3. *1005704.*

Solution A. Dissolve 5 g of *ammonium molybdate R* in 20 mL of *water R* with heating.

Solution B. Mix 150 mL of *ethanol (96 per cent) R* with 150 mL of *water R*. Add with cooling 100 mL of *sulfuric acid R*.

Immediately before use add 80 volumes of solution B to 20 volumes of solution A.

Ammonium molybdate solution R4. *1005705.*

Dissolve 1.0 g of *ammonium molybdate R* in *water R* and dilute to 40 mL with the same solvent. Add 3 mL of *hydrochloric acid R* and 5 mL of *perchloric acid R* and dilute to 100 mL with *acetone R*.

Storage: protected from light; use within 1 month.

Ammonium molybdate solution R5. *1005707.*

Dissolve 1.0 g of *ammonium molybdate R* in 40.0 mL of a 15 per cent *V/V* solution of *sulfuric acid R*. Prepare the solution daily.

Ammonium molybdate solution R6. *1005709.*

Slowly add 10 mL of *sulfuric acid R* to about 40 mL of *water R*. Mix and allow to cool. Dilute to 100 mL with *water R* and mix. Add 2.5 g of *ammonium molybdate R* and 1 g of *cerium sulfate R*, and shake for 15 min to dissolve.

Ammonium nitrate. NH_4NO_3. (M_r 80.0). *1005800.* [6484-52-2].

White or almost white, crystalline powder or colourless crystals, hygroscopic, very soluble in water, freely soluble in methanol, soluble in ethanol (96 per cent).

Storage: in an airtight container.

Ammonium nitrate R1. *1005801.*

Complies with the requirements prescribed for *ammonium nitrate R* with the following additional requirements.

Acidity. The solution of the substance is slightly acid (*2.2.4*).

Chlorides (*2.4.4*): maximum 100 ppm, determined on 0.50 g.

Sulfates (*2.4.13*): maximum 150 ppm, determined on 1.0 g.

Sulfated ash (*2.4.14*): maximum 0.05 per cent, determined on 1.0 g.

Ammonium oxalate. $C_2H_8N_2O_4,H_2O$. (M_r 142.1). *1005900.* [6009-70-7].

Colourless crystals, soluble in water.

Ammonium oxalate solution. *1005901.*

A 40 g/L solution.

Ammonium persulfate. $(NH_4)_2S_2O_8$. (M_r 228.2). *1006000.* [7727-54-0].

White or almost white, crystalline powder or granular crystals, freely soluble in water.

Ammonium phosphate. $(NH_4)_2HPO_4$. (M_r 132.1). *1006100.* [7783-28-0]. Diammonium hydrogen phosphate.

White or almost white crystals or granules, hygroscopic, very soluble in water, practically insoluble in ethanol (96 per cent).

pH (*2.2.3*): about 8 for a 200 g/L solution.

Storage: in an airtight container.

Ammonium pyrrolidinedithiocarbamate. $C_5H_{12}N_2S_2$. (M_r 164.3). *1006200.* [5108-96-3]. Ammonium 1-pyrrolidinyl-dithioformate.

White or pale yellow, crystalline powder, sparingly soluble in water, very slightly soluble in ethanol (96 per cent).

Storage: in a bottle containing a piece of ammonium carbonate in a muslin bag.

Ammonium reineckate. $NH_4[Cr(NCS)_4(NH_3)_2],H_2O$. ($M_r$ 354.4). *1006300.* [13573-16-5]. Ammonium diamine-tetrakis(isothiocyanato)chromate(III) monohydrate.

Red powder or crystals, sparingly soluble in cold water, soluble in hot water and in ethanol (96 per cent).

Ammonium reineckate solution. *1006301.*

A 10 g/L solution. Prepare immediately before use.

Ammonium sulfamate. $NH_2SO_3NH_4$. (M_r 114.1). *1006400.* [7773-06-0].

White or almost white, crystalline powder or colourless crystals, hygroscopic, very soluble in water, slightly soluble in ethanol (96 per cent).

mp: about 130 °C.

Storage: in an airtight container.

Ammonium sulfate. $(NH_4)_2SO_4$. (M_r 132.1). *1006500.* [7783-20-2].

Colourless crystals or white or almost white granules, very soluble in water, practically insoluble in acetone and in ethanol (96 per cent).

pH (*2.2.3*): 4.5 to 6.0 for a 50 g/L solution in *carbon dioxide-free water R*.

Sulfated ash (*2.4.14*): maximum 0.1 per cent.

Ammonium sulfide solution. *1123300.*

Saturate 120 mL of *dilute ammonia R1* with *hydrogen sulfide R* and add 80 mL of *dilute ammonia R1*. Prepare immediately before use.

Ammonium thiocyanate. NH_4SCN. (M_r 76.1). *1006700.* [1762-95-4].

Colourless crystals, deliquescent, very soluble in water, soluble in ethanol (96 per cent).

Storage: in an airtight container.

Ammonium thiocyanate solution. *1006701.*

A 76 g/L solution.

Ammonium vanadate. NH_4VO_3. (M_r 117.0). *1006800.* [7803-55-6]. Ammonium trioxovanadate(V).

White or slightly yellowish, crystalline powder, slightly soluble in water, soluble in *dilute ammonia R1*.

Ammonium vanadate solution. *1006801.*

Dissolve 1.2 g of *ammonium vanadate R* in 95 mL of *water R* and dilute to 100 mL with *sulfuric acid R*.

Amoxicillin trihydrate. *1103400.*

See *Amoxicillin trihydrate (0260)*.

α-Amylase. *1100800.* 1,4-α-D-glucane-glucanohydrolase (EC *3.2.1.1*).

White or light brown powder.

α-Amylase solution. *1100801.*

A solution of *α-amylase R* with an activity of 800 FAU/g.

β-Amyrin. $C_{30}H_{50}O$. (M_r 426.7). *1141800.* [559-70-6]. Olean-12-en-3β-ol.

White or almost white powder.

mp: 187 °C to 190 °C.

Anethole. $C_{10}H_{12}O$. (M_r 148.2). *1006900.* [4180-23-8]. 1-Methoxy-4-(propen-1-yl)benzene.

White or almost white, crystalline mass up to 20 °C to 21 °C, liquid above 23 °C, practically insoluble in water, freely soluble in anhydrous ethanol, soluble in ethyl acetate and in light petroleum.

n_D^{25}: about 1.56.

bp: about 230 °C.

Anethole used in gas chromatography complies with the following additional test.

Assay. Gas chromatography (*2.2.28*) as prescribed in the monograph *Anise oil (0804)*.

Test solution. The substance to be examined.

Content: minimum 99.0 per cent of *trans*-anethole (retention time: about 41 min), calculated by the normalisation procedure.

Aniline. C_6H_7N. (M_r 93.1). *1007100.* [62-53-3]. Benzeneamine.

Colourless or slightly yellowish liquid, soluble in water, miscible with ethanol (96 per cent).

d_{20}^{20}: about 1.02.

bp: 183 °C to 186 °C.

Storage: protected from light.

Aniline hydrochloride. C_6H_8ClN. (M_r 129.6). *1147700.* [142-04-1]. Benzenamine hydrochloride.

Crystals.
It darkens on exposure to air and light.

mp: about 198 °C.

Storage: protected from light.

Content: minimum 97.0 per cent.

Anion-exchange resin. *1007200.*

Resin in chlorinated form containing quaternary ammonium groups $[CH_2N^+(CH_3)_3]$ attached to a polymer lattice consisting of polystyrene cross-linked with 2 per cent of divinylbenzene. It is available as spherical beads and the particle size is specified in the monograph.

Wash the resin with *1 M sodium hydroxide* on a sintered-glass filter (40) (*2.1.2*) until the washings are free from chloride, then wash with *water R* until the washings are neutral. Suspend in freshly prepared *ammonium-free water R* and protect from atmospheric carbon dioxide.

Anion-exchange resin R1. *1123400.*

Resin containing quaternary ammonium groups $[CH_2N^+(CH_3)_3]$ attached to a lattice consisting of methacrylate.

Anion-exchange resin R2. *1141900.*

Conjugate of homogeneous 10 µm hydrophilic polyether particles, and a quaternary ammonium salt, providing a matrix suitable for strong anion-exchange chromatography of proteins.

Anion-exchange resin R3. *1180900.*

Resin with quaternary ammonium groups attached to a lattice of ethylvinylbenzene crosslinked with 55 per cent of divinylbenzene.

Anion-exchange resin for chromatography, strongly basic. *1112700.*

Resin with quaternary amine groups attached to a lattice of latex cross linked with divinylbenzene.

Anion-exchange resin for chromatography, strongly basic R1. *1187400.*

Non-porous resin agglomerated with a 100 nm alkyl quaternary ammonium functionalised latex.

Anion-exchange resin, strongly basic. *1026600.*

Gel-type resin in hydroxide form containing quaternary ammonium groups [$CH_2N^+(CH_3)_3$, type 1] attached to a polymer lattice consisting of polystyrene cross-linked with 8 per cent of divinylbenzene.

Brown transparent beads.

Particle size: 0.2 mm to 1.0 mm.

Moisture content: about 50 per cent.

Total exchange capacity: minimum 1.2 meq/mL.

Anion-exchange resin, weak. *1146700.*

Resin with diethylaminoethyl groups attached to a lattice consisting of poly(methyl methacrylate).

Anisaldehyde. $C_8H_8O_2$. (M_r 136.1). *1007300.* [123-11-5]. 4-Methoxybenzaldehyde.

Oily liquid, very slightly soluble in water, miscible with ethanol (96 per cent).

bp: about 248 °C.

Anisaldehyde used in gas chromatography complies with the following additional test.

Assay. Gas chromatography (*2.2.28*) as prescribed in the monograph *Anise oil (0804)*.

Test solution. The substance to be examined.

Content: minimum 99.0 per cent, calculated by the normalisation procedure.

Anisaldehyde solution. *1007301.*

Mix in the following order, 0.5 mL of *anisaldehyde R*, 10 mL of *glacial acetic acid R*, 85 mL of *methanol R* and 5 mL of *sulfuric acid R*.

Anisaldehyde solution R1. *1007302.*

To 10 mL of *anisaldehyde R* add 90 mL of *ethanol (96 per cent) R*, mix, add 10 mL of *sulfuric acid R* and mix again.

Anise ketone. $C_{10}H_{12}O_2$. (M_r 164.2). *1174700.* [122-84-9]. 1-(4-Methoxyphenyl)propan-2-one.

***p*-Anisidine.** C_7H_9NO. (M_r 123.2). *1103500.* [104-94-9]. 4-Methoxyaniline.

White or almost white crystals, sparingly soluble in water, soluble in anhydrous ethanol.

Content: minimum 97.0 per cent.

Caution: skin irritant, sensitiser.

Storage: protected from light, at 0 °C to 4 °C.

On storage, *p*-anisidine tends to darken as a result of oxidation. A discoloured reagent can be reduced and decolorised in the following way: dissolve 20 g of *p-anisidine R* in 500 mL of *water R* at 75 °C. Add 1 g of *sodium sulfite R* and 10 g of *activated charcoal R* and stir for 5 min. Filter, cool the filtrate to about 0 °C and allow to stand at this temperature for at least 4 h. Filter, wash the crystals with a small quantity of *water R* at about 0 °C and dry the crystals in vacuum over *diphosphorus pentoxide R*.

Anthracene. $C_{14}H_{10}$. (M_r 178.2). *1007400.* [120-12-7].

White or almost white, crystalline powder, practically insoluble in water, slightly soluble in chloroform.

mp: about 218 °C.

Anthrone. $C_{14}H_{10}O$. (M_r 194.2). *1007500.* [90-44-8]. 9(10*H*)-Anthracenone.

Pale yellow, crystalline powder.

mp: about 155 °C.

Antimony potassium tartrate. $C_4H_4KO_7Sb,{}^1/_2H_2O$. (M_r 333.9). *1007600.* Potassium aqua[tartrato(4–)-O^1,O^2,O^3]-antimoniate(III) hemihydrate.

White or almost white, granular powder or colourless, transparent crystals, soluble in water and in glycerol, freely soluble in boiling water, practically insoluble in ethanol (96 per cent). The aqueous solution is slightly acid.

Antimony trichloride. $SbCl_3$. (M_r 228.1). *1007700.* [10025-91-9].

Colourless crystals or a transparent crystalline mass, hygroscopic, freely soluble in anhydrous ethanol. Antimony trichloride is hydrolysed by water.

Storage: in an airtight container, protected from moisture.

Antimony trichloride solution. *1007701.*

Rapidly wash 30 g of *antimony trichloride R* with two quantities, each of 15 mL, of *ethanol-free chloroform R*, drain off the washings, and dissolve the washed crystals immediately in 100 mL of *ethanol-free chloroform R*, warming slightly.

Storage: over a few grams of *anhydrous sodium sulfate R*.

Antimony trichloride solution R1. *1007702.*

Solution A. Dissolve 110 g of *antimony trichloride R* in 400 mL of *ethylene chloride R*. Add 2 g of *anhydrous aluminium oxide R*, mix and filter through a sintered-glass filter (40) (*2.1.2*). Dilute to 500.0 mL with *ethylene chloride R* and mix. The absorbance (*2.2.25*) of the solution, determined at 500 nm in a 2 cm cell, is not greater than 0.07.

Solution B. In a fume cupboard, mix 100 mL of freshly distilled *acetyl chloride R* and 400 mL of *ethylene chloride R*.

Mix 90 mL of solution A and 10 mL of solution B.

Storage: in brown ground-glass-stoppered bottle for 7 days. Discard any reagent in which colour develops.

Antithrombin III. *1007800.* [90170-80-2].

Antithrombin III is purified from human plasma by heparin agarose chromatography and should have a specific activity of at least 6 IU/mg.

Antithrombin III solution R1. *1007801.*

Reconstitute *antithrombin III R* as directed by the manufacturer and dilute with *tris(hydroxymethyl)aminomethane sodium chloride buffer solution pH 7.4 R* to 1 IU/mL.

Antithrombin III solution R2. *1007802.*

Reconstitute *antithrombin III R* as directed by the manufacturer and dilute with *tris(hydroxymethyl)aminomethane sodium chloride buffer solution pH 7.4 R* to 0.5 IU/mL.

Antithrombin III solution R3. *1007803.*

Reconstitute *antithrombin III R* as directed by the manufacturer and dilute to 0.3 IU/mL with *phosphate buffer solution pH 6.5 R*.

Antithrombin III solution R4. *1007804.*

Reconstitute *antithrombin III R* as directed by the manufacturer and dilute to 0.1 IU/mL with *tris(hydroxymethyl)aminomethane-EDTA buffer solution pH 8.4 R*.

Apigenin. $C_{15}H_{10}O_5$. (M_r 270.2). *1095800.* [520-36-5]. 4′,5,7-Trihydroxyflavone.

Light yellowish powder, practically insoluble in water, sparingly soluble in ethanol (96 per cent).

mp: about 310 °C, with decomposition.

Chromatography. Thin-layer chromatography (*2.2.27*) as prescribed in the monograph *Roman chamomile flower (0380)*: apply 10 µL of a 0.25 g/L solution in *methanol R*; the chromatogram shows in the upper third a principal zone of yellowish-green fluorescence.

Apigenin 7-glucoside. $C_{21}H_{20}O_{10}$. (M_r 432.4). *1095900.* [578-74-5]. Apigetrin. 7-(β-D-Glucopyranosyloxy)-5-hydroxy-2-(4-hydroxyphenyl)-4*H*-1-benzopyran-4-one.

Light yellowish powder, practically insoluble in water, sparingly soluble in ethanol (96 per cent).

mp: 198 °C to 201 °C.

Chromatography. Thin-layer chromatography (*2.2.27*) as prescribed in the monograph *Roman chamomile flower (0380)*: apply 10 µL of a 0.25 g/L solution in *methanol R*; the chromatogram shows in the middle third a principal zone of yellowish fluorescence.

Apigenin-7-glucoside used in liquid chromatography complies with the following additional test.

Assay. Liquid chromatography (*2.2.29*) as prescribed in the monograph *Matricaria flower (0404)*.

Test solution. Dissolve 10.0 mg in *methanol R* and dilute to 100.0 mL with the same solvent.

Content: minimum 95.0 per cent, calculated by the normalisation procedure.

Aprotinin. *1007900.* [9087-70-1].

See *Aprotinin (0580)*.

Arabinose. $C_5H_{10}O_5$. (M_r 150.1). *1008000.* [87-72-9]. L-(+)-Arabinose.

White or almost white, crystalline powder, freely soluble in water.

$[\alpha]_D^{20}$: + 103 to + 105, determined on a 50 g/L solution in *water R* containing about 0.05 per cent of NH_3.

Arachidyl alcohol. $C_{20}H_{42}O$. (M_r 298.5). *1156300.* [629-96-9]. 1-Eicosanol.

mp: about 65 °C.

Content: minimum 96 per cent of $C_{20}H_{42}O$.

Arbutin. $C_{12}H_{16}O_7$. (M_r 272.3). *1008100.* [497-76-7]. Arbutoside. 4-Hydroxyphenyl-β-D-glucopyranoside.

Fine, white or almost white, shiny needles, freely soluble in water, very soluble in hot water, soluble in ethanol (96 per cent).

Chromatography. Thin-layer chromatography (*2.2.27*) as prescribed in the monograph *Bearberry leaf (1054)*; the chromatogram shows only one principal spot.

Arginine. *1103600.* [74-79-3].

See *Arginine (0806)*.

Argon. Ar. (A_r 39.95). *1008200.* [7440-37-1].

Content: minimum 99.995 per cent *V/V*.

Carbon monoxide (*2.5.25, Method I*): maximum 0.6 ppm *V/V*; after passage of 10 L of *argon R* at a flow rate of 4 L/h, not more than 0.05 mL of *0.002 M sodium thiosulfate* is required for the titration.

Argon R1. Ar. (A_r 39.95). *1176000.* [7440-37-1].

Content: minimum 99.99990 per cent *V/V*.

Argon for chromatography. Ar. (A_r 39.95). *1166200.* [7440-37-1].

Content: minimum 99.95 per cent *V/V*.

Aromadendrene. $C_{15}H_{24}$. (M_r 204.4). *1139100.* [489-39-4]. (1*R*,2*S*,4*R*,8*R*,11*R*)-3,3,11-Trimethyl-7-methylenetricyclo-[6.3.0.0^{2,4}]undecane.

Clear, almost colourless liquid.

d_4^{20}: about 0.911.

n_D^{20}: about 1.497.

$[\alpha]_D^{20}$: about + 12.

bp: about 263 °C.

Aromadendrene used in gas chromatography complies with the following additional test.

Assay. Gas chromatography (*2.2.28*) as prescribed in the monograph on *Tea tree oil (1837)*.

Content: minimum 92 per cent, calculated by the normalisation procedure.

Arsenious trioxide. As_2O_3. (M_r 197.8). *1008300.* [1327-53-3]. Arsenious anhydride. Diarsenic trioxide.

Crystalline powder or a white or almost white mass, slightly soluble in water, soluble in boiling water.

Arsenite solution. *1008301.*

Dissolve 0.50 g of *arsenious trioxide R* in 5 mL of *dilute sodium hydroxide solution R*, add 2.0 g of *sodium hydrogen carbonate R* and dilute to 100.0 mL with *water R*.

Ascorbic acid. *1008400.* [50-81-7].

See *Ascorbic acid (0253)*.

Ascorbic acid solution. *1008401.*

Dissolve 50 mg in 0.5 mL of *water R* and dilute to 50 mL with *dimethylformamide R*.

Asiaticoside. $C_{48}H_{78}O_{19}$. (M_r 959). *1123500.* [16830-15-2]. *O*-6-Deoxy-α-L-mannopyranosyl-(1→4)-*O*-β-D-glucopyranosyl-(1→6)-β-D-glucopyranosyl 2α,3β,23-trihydroxy-4α-urs-12-en-28-oate.

White or almost white powder, hygroscopic, soluble in methanol, slightly soluble in anhydrous ethanol, insoluble in acetonitrile.

mp: about 232 °C, with decomposition.

Water (*2.5.12*): 6.0 per cent.

Asiaticoside used in liquid chromatography complies with the following additional test.

Assay. Liquid chromatography (*2.2.29*) as prescribed in the monograph *Centella (1498)*.

Content: minimum 97.0 per cent, calculated by the normalisation procedure.

Storage: protected from humidity.

Aspartic acid. *1134100.* [56-84-8].

See *Aspartic acid (0797)*.

L-Aspartyl-L-phenylalanine. $C_{13}H_{16}N_2O_5$. (M_r 280.3). *1008500.* [13433-09-5]. (*S*)-3-Amino-*N*-[(*S*)-1-carboxy-2-phenylethyl]-succinamic acid.

White or almost white powder.

mp: about 210 °C, with decomposition.

Astragaloside IV. $C_{41}H_{68}O_{14}$. (M_r 785). *1178200.* [84687-43-4]. (20*R*,24*S*)-20,24-Epoxy-16β,25-dihydroxy-3β-(β-D-xylopyranosyloxy)-9,19-cyclolanostan-6α-yl β-D-glucopyranoside.

Atropine sulfate. *1159000.* [5908-99-6].

See *Atropine sulfate (0068)*.

Aucubin. $C_{15}H_{22}O_9$. (M_r 346.3). *1145200.* [479-98-1]. [1*S*,4a*R*,5*S*,7a*S*)-5-Hydroxy-7-(hydroxymethyl)-1,4a,5,7a-tetrahydrocyclopenta[*c*]pyran-1-yl β-D-glucopyranoside.

Crystals, soluble in water, in ethanol (96 per cent) and in methanol, practically insoluble in light petroleum.

$[\alpha]_D^{20}$: about − 163.

mp: about 181 °C.

Azomethine H. $C_{17}H_{12}NNaO_8S_2$. (M_r 445.4). *1008700.* [5941-07-1]. Sodium hydrogeno-4-hydroxy-5-(2-hydroxybenzylideneamino)-2,7-naphthalenedisulfonate.

Azomethine H solution. *1008701.*

Dissolve 0.45 g of *azomethine H R* and 1 g of *ascorbic acid R* with gentle heating in *water R* and dilute to 100 mL with the same solvent.

Baicalin. $C_{21}H_{18}O_{11}$. (M_r 446.4). *1179200.* [21967-41-9].
5,6-Dihydroxy-4-oxo-2-phenyl-4*H*-1-benzopyran-7-yl-β-D-glucopyranosiduronic acid.

Barbaloin. $C_{21}H_{22}O_9,H_2O$. (M_r 436.4). *1008800.* [1415-73-2]. Aloin. 1,8-Dihydroxy-3-hydroxymethyl-10-β-D-glucopyranosyl-10*H*-anthracen-9-one.
Yellow to dark-yellow, crystalline powder, or yellow needles, darkening on exposure to air and light, sparingly soluble in water and in ethanol (96 per cent), soluble in acetone, in ammonia and in solutions of alkali hydroxides.
$A_{1\,cm}^{1\%}$: about 192 at 269 nm, about 226 at 296.5 nm, about 259 at 354 nm, determined on a solution in *methanol R* and calculated with reference to the anhydrous substance.
Chromatography. Thin-layer chromatography (*2.2.27*) as prescribed in the monograph *Frangula bark (0025)*; the chromatogram shows only one principal spot.

Barbital. *1008900.* [57-44-3].
See *Barbital (0170)*.

Barbital sodium. $C_8H_{11}N_2NaO_3$. (M_r 206.2). *1009000.* [144-02-5]. Sodium derivative of 5,5-diethyl-1*H*,3*H*,5*H*-pyrimidine-2,4,6-trione.
Content: minimum 98.0 per cent.
A white or almost white, crystalline powder or colourless crystals, freely soluble in water, slightly soluble in ethanol (96 per cent).

Barbituric acid. $C_4H_4N_2O_3$. (M_r 128.1). *1009100.* [67-52-7]. 1*H*,3*H*,5*H*-Pyrimidine-2,4,6-trione.
White or almost white powder, slightly soluble in water, freely soluble in boiling water and in dilute acids.
mp: about 253 °C.

Barium acetate. $C_4H_6BaO_4$. (M_r 255.4). *1162700.* [543-80-6]. Barium diacetate.
White or almost white powder, soluble in water.
d_{20}^{20}: 2.47.

Barium carbonate. $BaCO_3$. (M_r 197.3). *1009200.* [513-77-9].
White or almost white powder or friable masses, practically insoluble in water.

Barium chloride. $BaCl_2,2H_2O$. (M_r 244.3). *1009300.* [10326-27-9]. Barium dichloride.
Colourless crystals, freely soluble in water, slightly soluble in ethanol (96 per cent).

Barium chloride solution R1. *1009301.*
A 61 g/L solution.

Barium chloride solution R2. *1009302.*
A 36.5 g/L solution.

Barium hydroxide. $Ba(OH)_2,8H_2O$. (M_r 315.5). *1009400.* [12230-71-6]. Barium dihydroxide.
Colourless crystals, soluble in water.

Barium hydroxide solution. *1009401.*
A 47.3 g/L solution.

Barium nitrate. $Ba(NO_3)_2$. (M_r 261.3). *1163800.* [10022-31-8].
Crystals or crystalline powder, freely soluble in water, very slightly soluble in ethanol (96 per cent) and in acetone.
mp: about 590 °C.

Barium sulfate. *1009500.* [7727-43-7].
See *Barium sulfate (0010)*.

Benzalacetone. $C_{10}H_{10}O$. (M_r 146.2). *1168500.* [122-57-6]. (3*E*)-4-phenylbut-3-en-2-one.
White or pale yellow mass.
Content: minimum 98.0 per cent.
bp: about 261 °C.
mp: about 39 °C.

Benzaldehyde. C_7H_6O. (M_r 106.1). *1009600.* [100-52-7].
Colourless or slightly yellow liquid, slightly soluble in water, miscible with ethanol (96 per cent).
d_{20}^{20}: about 1.05.
n_D^{20}: about 1.545.
Distillation range (*2.2.11*). Not less than 95 per cent distils between 177 °C and 180 °C.
Storage: protected from light.

Benzene. C_6H_6. (M_r 78.1). *1009800.* [71-43-2].
Clear, colourless, flammable liquid, practically insoluble in water, miscible with ethanol (96 per cent).
bp: about 80 °C.

Benzene-1,2,4-triol. $C_6H_6O_3$. (M_r 126.1). *1177500.* [533-73-3]. Hydroxyhydroquinone. Hydroxyquinol.
Freely soluble in water, in ethanol (96 per cent) and in ethyl acetate.
mp: about 140 °C.

Benzethonium chloride. $C_{27}H_{42}ClNO_2,H_2O$. (M_r 466.1). *1009900.* [121-54-0]. Benzyldimethyl[2-[2-[4-(1,1,3,3-tetramethylbutyl)phenoxy]ethoxy]ethyl]ammonium chloride monohydrate.
Fine, white or almost white powder or colourless crystals, soluble in water and in ethanol (96 per cent).
mp: about 163 °C.
Storage: protected from light.

Benzidine. $C_{12}H_{12}N_2$. (M_r 184.2). *1145300.* [92-87-5]. Biphenyl-4,4′-diamine.
Content: minimum 95 per cent.
White or slightly yellowish or reddish powder, darkening on exposure to air and light.
mp: about 120 °C.
Storage: protected from light.

Benzil. $C_{14}H_{10}O_2$. (M_r 210.2). *1117800.* [134-81-6]. Diphenylethanedione.
Yellow, crystalline powder, practically insoluble in water, soluble in ethanol (96 per cent), ethyl acetate and toluene.
mp: 95 °C.

Benzocaine. $C_9H_{11}NO_2$. (M_r 165.2). *1123600.* [94-09-7].
See *Benzocaine (0011)*.

Benzoic acid. *1010100.* [65-85-0].
See *Benzoic acid (0066)*.

Benzoin. $C_{14}H_{12}O_2$. (M_r 212.3). *1010200.* [579-44-2]. 2-Hydroxy-1,2-diphenylethanone.
Slightly yellowish crystals, very slightly soluble in water, freely soluble in acetone, soluble in hot ethanol (96 per cent).
mp: about 137 °C.

Benzophenone. $C_{13}H_{10}O$. (M_r 182.2). *1010300.* [119-61-9]. Diphenylmethanone.
Prismatic crystals, practically insoluble in water, freely soluble in ethanol (96 per cent).
mp: about 48 °C.

1,4-Benzoquinone. $C_6H_4O_2$. (M_r 108.1). *1118500.* [106-51-4]. Cyclohexa-2,5-diene-1,4-dione.
Content: minimum 98.0 per cent.

Benzoylarginine ethyl ester hydrochloride. $C_{15}H_{23}ClN_4O_3$. (M_r 342.8). *1010500.* [2645-08-1]. *N*-Benzoyl-L-arginine ethyl ester hydrochloride. Ethyl (*S*)-2-benzamido-5-guanidinovalerate hydrochloride.

White or almost white, crystalline powder, very soluble in water and in anhydrous ethanol.

$[\alpha]_D^{20}$: − 15 to − 18, determined on a 10 g/L solution.

mp: about 129 °C.

$A_{1\,cm}^{1\%}$: 310 to 340, determined at 227 nm using a 0.01 g/L solution.

Benzoyl chloride. C_7H_5ClO. (M_r 140.6). *1010400.* [98-88-4].

Colourless, lachrymatory liquid, decomposed by water and by ethanol (96 per cent).

d_{20}^{20}: about 1.21.

bp: about 197 °C.

***N*-Benzoyl-L-prolyl-L-phenylalanyl-L-arginine 4-nitroanilide acetate.** $C_{35}H_{42}N_8O_8$. (M_r 703). *1010600.*

3-Benzoylpropionic acid. $C_{10}H_{10}O_3$. (M_r 178.2). *1171000.* [2051-95-8]. 4-Oxo-4-phenylbutanoic acid.

mp: about 118 °C.

2-Benzoylpyridine. $C_{12}H_9NO$. (M_r 183.2). *1134300.* [91-02-1]. Phenyl(pyridin-2-yl)methanone.

Colourless crystals, soluble in ethanol (96 per cent).

mp: about 43 °C.

Benzyl alcohol. *1010700.* [100-51-6].

See *Benzyl alcohol (0256)*.

Benzyl benzoate. *1010800.* [120-51-4].

See *Benzyl benzoate (0705)*.

Chromatography. Thin-layer chromatography (*2.2.27*) as prescribed in the monograph *Peru balsam (0754)*: apply 20 µL of a 0.3 per cent *V/V* solution in *ethyl acetate R*; after spraying and heating, the chromatogram shows a principal band with an R_F of about 0.8.

Benzyl cinnamate. $C_{16}H_{14}O_2$. (M_r 238.3). *1010900.* [103-41-3]. Benzyl 3-phenylprop-2-enoate.

Colourless or yellowish crystals, practically insoluble in water, soluble in ethanol (96 per cent).

mp: about 39 °C.

Chromatography. Thin-layer chromatography (*2.2.27*) as prescribed in the monograph *Peru balsam (0754)*: apply 20 µL of a 3 g/L solution in *ethyl acetate R*; after spraying and heating, the chromatogram shows a principal band with an R_F of about 0.6.

Benzyl cyanide. C_8H_7N. (M_r 117.2). *1171100.* [140-29-4]. Phenylacetonitrile.

Content: minimum 95.0 per cent.

Clear, colourless or light yellow liquid.

n_D^{20}: about 1.523.

bp: about 233 °C.

Benzyl ether. $C_{14}H_{14}O$. (M_r 198.3). *1140900.* [103-50-4]. Dibenzyl ether.

Clear, colourless liquid, practically insoluble in water, miscible with acetone and with anhydrous ethanol.

d_{20}^{20}: about 1.043.

n_D^{20}: about 1.562.

bp: about 296 °C, with decomposition.

Benzylpenicillin sodium. *1011000.* [69-57-8].

See *Benzylpenicillin sodium (0114)*.

2-Benzylpyridine. $C_{12}H_{11}N$. (M_r 169.2). *1112900.* [101-82-6].

Content: minimum 98.0 per cent.

Yellow liquid.

mp: 13 °C to 16 °C.

4-Benzylpyridine. $C_{12}H_{11}N$. (M_r 169.2). *1181200.* [2116-65-6].

Content: minimum 98.0 per cent.

Yellow liquid.

mp: 72 °C to 78 °C.

Benzyltrimethylammonium chloride. $C_{10}H_{16}ClN$. (M_r 185.7). *1155700.* [56-93-9]. *N,N,N*-Trimethylphenylmethanaminium chloride. *N,N,N*-Trimethylbenzenemethanaminium chloride.

White or almost white powder, soluble in water.

mp: about 230 °C, with decomposition.

Berberine chloride. $C_{20}H_{18}ClNO_4,2H_2O$. (M_r 407.8). *1153400.* [5956-60-5]. 9,10-Dimethoxy-5,6-dihydrobenzo[*g*]-1,3-benzodioxolo[5,6-*a*]quinolizinium chloride.

Yellow crystals, slightly soluble in water, practically insoluble in ethanol (96 per cent).

mp: 204 °C to 206 °C.

Berberine chloride used in liquid chromatography complies with the following additional test.

Assay. Liquid chromatography (*2.2.29*) as prescribed in the monograph *Goldenseal rhizome (1831)*.

Content: minimum 95 per cent, calculated by the normalisation procedure.

Bergapten. $C_{12}H_8O_4$. (M_r 216.2). *1103700.* [484-20-8]. 5-Methoxypsoralen.

Colourless crystals, practically insoluble in water, sparingly soluble in ethanol (96 per cent) and slightly soluble in glacial acetic acid.

mp: about 188 °C.

Betulin. $C_{30}H_{50}O_2$. (M_r 442.7). *1011100.* [473-98-3]. Lup-20(39)-ene-3β,28-diol.

White or almost white, crystalline powder.

mp: 248 °C to 251 °C.

Bibenzyl. $C_{14}H_{14}$. (M_r 182.3). *1011200.* [103-29-7]. 1,2-Diphenylethane.

White or almost white, crystalline powder, practically insoluble in water, very soluble in methylene chloride, freely soluble in acetone, soluble in ethanol (96 per cent).

mp: 50 °C to 53 °C.

Biphenyl. $C_{12}H_{10}$. (M_r 154.2). *1168600.* [92-52-4].

mp: 68 °C to 70 °C.

(−)-α-Bisabolol. $C_{15}H_{26}O$. (M_r 222.4). *1128800.* [23089-26-1]. (2*S*)-6-Methyl-2-[(1*S*)-4-methylcyclohex-3-enyl]hept-5-en-2-ol. Levomenol.

Colourless, viscous liquid with a slight, characteristic odour, practically insoluble in water, freely soluble in ethanol (96 per cent), in methanol, in toluene, in fatty oils and in essential oils.

d_{20}^{20}: 0.925 to 0.935.

n_D^{20}: 1.492 to 1.500.

$[\alpha]_D^{20}$: − 54.5 to − 58.0, determined on a 50 g/L solution in *ethanol (96 per cent) R*.

(−)-α-Bisabolol used for gas chromatography complies with the following additional test.

Assay. Gas chromatography (*2.2.28*) as prescribed in the monograph *Matricaria oil (1836)*.

Test solution. A 4 g/L solution in *cyclohexane R*.

Content: minimum 95.0 per cent, calculated by the normalisation procedure.

Bisbenzimide. $C_{25}H_{27}Cl_3N_6O,5H_2O$. ($M_r$ 624). *1103800.* [23491-44-3]. 4-[5-[5-(4-Methylpiperazin-1-yl)benzimidazol-2-yl]benzimidazol-2-yl]phenol trihydrochloride pentahydrate.

Bisbenzimide stock solution. *1103801.*

Dissolve 5 mg of *bisbenzimide R* in *water R* and dilute to 100 mL with the same solvent.

Storage: in the dark.

Bisbenzimide working solution. *1103802.*

Immediately before use, dilute 100 µL of *bisbenzimide stock solution R* to 100 mL with *phosphate buffered saline pH 7.4 R*.

Bismuth nitrate pentahydrate. $Bi(NO_3)_3,5H_2O$. (M_r 485.1). *1165600.* [10035-06-0].

mp: about 30 °C.

Bismuth subnitrate. $4BiNO_3(OH)_2,BiO(OH)$. (M_r 1462). *1011500.* [1304-85-4].

White or almost white powder, practically insoluble in water.

Bismuth subnitrate R1. *1011501.*

Content: 71.5 per cent to 74.0 per cent of bismuth (Bi), and 14.5 per cent to 16.5 per cent of nitrate, calculated as nitrogen pentoxide (N_2O_5).

Bismuth subnitrate solution. *1011502.*

Dissolve 5 g of *bismuth subnitrate R1* in a mixture of 8.4 mL of *nitric acid R* and 50 mL of *water R* and dilute to 250 mL with *water R*. Filter if necessary.

Acidity. To 10 mL add 0.05 mL of *methyl orange solution R*. 5.0 mL to 6.25 mL of *1 M sodium hydroxide* is required to change the colour of the indicator.

Bis-tris propane. $C_{11}H_{26}N_2O_6$. (M_r 282.3). *1185500.* [64431-96-5]. 2,2′-(Propane-1,3-diyldiimino)bis[2-(hydroxymethyl)-1,3-propanediol.

Content: minimum 99.0 per cent.

Biuret. $C_2H_5N_3O_2$. (M_r 103.1). *1011600.* [108-19-0].

White or almost white crystals, hygroscopic, soluble in water, sparingly soluble in ethanol (96 per cent).

mp: 188 °C to 190 °C, with decomposition.

Storage: in an airtight container.

Biuret reagent. *1011601.*

Dissolve 1.5 g of *copper sulfate R* and 6.0 g of *sodium potassium tartrate R* in 500 mL of *water R*. Add 300 mL of a carbonate-free 100 g/L solution of *sodium hydroxide R*, dilute to 1000 mL with the same solution and mix.

Blocking solution. *1122400.*

A 10 per cent *V/V* solution of *acetic acid R*.

Blue dextran 2000. *1011700.* [9049-32-5].

Prepared from dextran having an average relative molecular mass of 2×10^6 by introduction of a polycyclic chromophore that colours the substance blue. The degree of substitution is 0.017.

It is freeze-dried and dissolves rapidly and completely in water and aqueous saline solutions.

Absorbance (*2.2.25*). A 1 g/L solution in a *phosphate buffer solution pH 7.0 R* shows an absorption maximum at 280 nm.

Boldine. $C_{19}H_{21}NO_4$. (M_r 327.3). *1118800.* [476-70-0]. 1,10-Dimethoxy-6aα-aporphine-2,9-diol.

White or almost white crystalline powder, very slightly soluble in water, soluble in ethanol (96 per cent) and in dilute solutions of acids.

$[\alpha]_D^{25}$: about + 127, determined on a 1 g/L solution in *anhydrous ethanol R*.

mp: about 163 °C.

Boric acid. *1011800.* [10043-35-3].

See *Boric acid (0001)*.

Boric acid solution, saturated, cold. *1011801.*

To 3 g of *boric acid R* add 50 mL of *water R* and shake for 10 min. Place the solution for 2 h in the refrigerator.

Borneol. $C_{10}H_{18}O$. (M_r 154.3). *1011900.* [507-70-0]. *endo*-1,7,7-Trimethylbicyclo[2.2.1]heptan-2-ol.

Colourless crystals, readily sublimes, practically insoluble in water, freely soluble in ethanol (96 per cent) and in light petroleum.

mp: about 208 °C.

Chromatography. Thin-layer chromatography (*2.2.27*), using *silica gel G R* as the coating substance. Apply to the plate 10 µL of a 1 g/L solution in *toluene R*. Develop over a path of 10 cm using *chloroform R*. Allow the plate to dry in air, spray with *anisaldehyde solution R*, using 10 mL for a plate 200 mm square, and heat at 100-105 °C for 10 min. The chromatogram obtained shows only one principal spot.

Bornyl acetate. $C_{12}H_{20}O_2$. (M_r 196.3). *1012000.* [5655-61-8]. *endo*-1,7,7-Trimethylbicyclo[2.2.1]hept-2-yl acetate.

Colourless crystals or a colourless liquid, very slightly soluble in water, soluble in ethanol (96 per cent).

mp: about 28 °C.

Chromatography. Thin-layer chromatography (*2.2.27*), using *silica gel G R* as the coating substance. Apply to the plate 10 µL of a 2 g/L solution in *toluene R*. Develop over a path of 10 cm using *chloroform R*. Allow the plate to dry in air, spray with *anisaldehyde solution R*, using 10 mL for a plate 200 mm square, and heat at 100-105 °C for 10 min. The chromatogram obtained shows only one principal spot.

Boron trichloride. BCl_3. (M_r 117.2). *1112000.* [10294-34-5].

Colourless gas. Reacts violently with water. Available as solutions in suitable solvents (2-chloroethanol, methylene chloride, hexane, heptane, methanol).

n_D^{20}: about 1.420.

bp: about 12.6 °C.

Caution: toxic and corrosive.

Boron trichloride-methanol solution. *1112001.*

A 120 g/L solution of BCl_3 in *methanol R*.

Storage: protected from light at − 20 °C, preferably in sealed tubes.

Boron trifluoride. BF_3. (M_r 67.8). *1012100.* [7637-07-2].

Colourless gas.

Boron trifluoride-methanol solution. *1012101.*

A 140 g/L solution of *boron trifluoride R* in *methanol R*.

Brilliant blue. *1012200.* [6104-59-2].

See *acid blue 83 R*.

Bromelains. *1012300.* [37189-34-7].

Concentrate of proteolytic enzymes derived from *Ananas comosus* Merr.

Dull-yellow powder.

Activity. 1 g liberates about 1.2 g of amino-nitrogen from a solution of *gelatin R* in 20 min at 45 °C and pH 4.5.

Bromelains solution. *1012301.*

A 10 g/L solution of *bromelains R* in a mixture of 1 volume of *phosphate buffer solution pH 5.5 R* and 9 volumes of a 9 g/L solution of *sodium chloride R*.

Bromine. Br_2. (M_r 159.8). *1012400.* [7726-95-6].

Brownish-red fuming liquid, slightly soluble in water, soluble in ethanol (96 per cent).

d_{20}^{20}: about 3.1.

Bromine solution. *1012401.*

Dissolve 30 g of *bromine R* and 30 g of *potassium bromide R* in *water R* and dilute to 100 mL with the same solvent.

Bromine water. *1012402.*

Shake 3 mL of *bromine R* with 100 mL of *water R* to saturation.

Storage: over an excess of *bromine R*, protected from light.

Bromine water R1. *1012403.*

Shake 0.5 mL of *bromine R* with 100 mL of *water R*.

Storage: protected from light; use within 1 week.

Bromocresol green. $C_{21}H_{14}Br_4O_5S$. (M_r 698). *1012600.* [76-60-8]. 3′,3″,5′,5″-Tetrabromo-*m*-cresol-sulfonphthalein. 4,4′-(3*H*-2,1-Benzoxathiol-3-ylidene)bis(2,6-dibromo-3-methylphenol)-*S,S*-dioxide.

Brownish-white powder, slightly soluble in water, soluble in ethanol (96 per cent) and in dilute solutions of alkali hydroxides.

Bromocresol green-methyl red solution. *1012602.*

Dissolve 0.15 g of *bromocresol green R* and 0.1 g of *methyl red R* in 180 mL of *anhydrous ethanol R* and dilute to 200 mL with *water R*.

Bromocresol green solution. *1012601.*

Dissolve 50 mg of *bromocresol green R* in 0.72 mL of *0.1 M sodium hydroxide* and 20 mL of *ethanol (96 per cent) R* and dilute to 100 mL with *water R*.

Test for sensitivity. To 0.2 mL of the bromocresol green solution add 100 mL of *carbon dioxide-free water R*. The solution is blue. Not more than 0.2 mL of *0.02 M hydrochloric acid* is required to change the colour to yellow.

Colour change: pH 3.6 (yellow) to pH 5.2 (blue).

Bromocresol purple. $C_{21}H_{16}Br_2O_5S$. (M_r 540.2). *1012700.* [115-40-2]. 3′,3″-Dibromo-*o*-cresolsulfonphthalein. 4,4′-(3*H*-2,1-Benzoxathiol-3-ylidene)bis(2-bromo-6-methylphenol)-*S,S*-dioxide.

Pinkish powder, practically insoluble in water, soluble in ethanol (96 per cent) and in dilute solutions of alkali hydroxides.

Bromocresol purple solution. *1012701.*

Dissolve 50 mg of *bromocresol purple R* in 0.92 mL of *0.1 M sodium hydroxide* and 20 mL of *ethanol (96 per cent) R* and dilute to 100 mL with *water R*.

Test for sensitivity. To 0.2 mL of the bromocresol purple solution add 100 mL of *carbon dioxide-free water R* and 0.05 mL of *0.02 M sodium hydroxide*. The solution is bluish-violet. Not more than 0.2 mL of *0.02 M hydrochloric acid* is required to change the colour to yellow.

Colour change: pH 5.2 (yellow) to pH 6.8 (bluish-violet).

5-Bromo-2′-deoxyuridine. $C_9H_{11}BrN_2O_5$. (M_r 307.1). *1012500.* [59-14-3]. 5-Bromo-1-(2-deoxy-β-d-*erythro*-pentofuranosyl)-1*H*,3*H*-pyrimidine-2,4-dione.

mp: about 194 °C.

Chromatography. Thin-layer chromatography (*2.2.27*) as prescribed in the monograph *Idoxuridine (0669)*: apply 5 µL of a 0.25 g/L solution; the chromatogram shows only one principal spot.

Bromomethoxynaphthalene. $C_{11}H_9BrO$. (M_r 237.1). *1159100.* [5111-65-9]. 2-Bromo-6-methoxynaphthalene.

mp: about 109 °C.

Bromophenol blue. $C_{19}H_{10}Br_4O_5S$. (M_r 670). *1012800.* [115-39-9]. 3′,3″,5′,5″-Tetrabromophenolsulfonphthalein. 4,4′-(3*H*-2,1-Benzoxathiol-3-ylidene)bis(2,6-dibromophenol) *S,S*-dioxide.

Light orange-yellow powder, very slightly soluble in water, slightly soluble in ethanol (96 per cent), freely soluble in solutions of alkali hydroxides.

Bromophenol blue solution. *1012801.*

Dissolve 0.1 g of *bromophenol blue R* in 1.5 mL of *0.1 M sodium hydroxide* and 20 mL of *ethanol (96 per cent) R* and dilute to 100 mL with *water R*.

Test for sensitivity. To 0.05 mL of the bromophenol blue solution add 20 mL of *carbon dioxide-free water R* and 0.05 mL of *0.1 M hydrochloric acid*. The solution is yellow. Not more than 0.1 mL of *0.1 M sodium hydroxide* is required to change the colour to bluish-violet.

Colour change: pH 2.8 (yellow) to pH 4.4 (bluish-violet).

Bromophenol blue solution R1. *1012802.*

Dissolve 50 mg of *bromophenol blue R* with gentle heating in 3.73 mL of *0.02 M sodium hydroxide* and dilute to 100 mL with *water R*.

Bromophenol blue solution R2. *1012803.*

Dissolve with heating 0.2 g of *bromophenol blue R* in 3 mL of *0.1 M sodium hydroxide* and 10 mL of *ethanol (96 per cent) R*. After solution is effected, allow to cool and dilute to 100 mL with *ethanol (96 per cent) R*.

Bromophos. $C_8H_8BrCl_2O_3PS$. (M_r 366.0). *1123700.* [2104-96-3].

A suitable certified reference solution (10 ng/µL in iso-octane) may be used.

Bromophos-ethyl. $C_{10}H_{12}BrCl_2O_3PS$. (M_r 394.0). *1123800.* [4824-78-6].

A suitable certified reference solution (10 ng/µL in iso-octane) may be used.

Bromothymol blue. $C_{27}H_{28}Br_2O_5S$. (M_r 624). *1012900.* [76-59-5]. 3′,3″-Dibromothymolsulfonphthalein. 4,4′-(3*H*-2,1-Benzoxathiol-3-ylidene)bis(2-bromo-6-isopropyl-3-methylphenol) *S,S*-dioxide.

Reddish-pink or brownish powder, practically insoluble in water, soluble in ethanol (96 per cent) and in dilute solutions of alkali hydroxides.

Bromothymol blue solution R1. *1012901.*

Dissolve 50 mg of *bromothymol blue R* in a mixture of 4 mL of *0.02 M sodium hydroxide* and 20 mL of *ethanol (96 per cent) R* and dilute to 100 mL with *water R*.

Test for sensitivity. To 0.3 mL of *bromothymol blue solution R1* add 100 mL of *carbon dioxide-free water R*. The solution is yellow. Not more than 0.1 mL of *0.02 M sodium hydroxide* is required to change the colour to blue.

Colour change: pH 5.8 (yellow) to pH 7.4 (blue).

Bromothymol blue solution R2. *1012902.*

A 10 g/L solution in *dimethylformamide R*.

Bromothymol blue solution R3. *1012903.*

Warm 0.1 g of *bromothymol blue R* with 3.2 mL of *0.05 M sodium hydroxide* and 5 mL of *ethanol (90 per cent V/V) R*. After solution is effected, dilute to 250 mL with *ethanol (90 per cent V/V) R*.

Bromothymol blue solution R4. *1012904.*

Dissolve 100 mg of *bromothymol blue R* in a mixture of equal volumes of *ethanol (96 per cent) R* and *water R* and dilute to 100 mL with the same mixture of solvents. Filter if necessary.

BRP indicator solution. *1013000.*

Dissolve 0.1 g of *bromothymol blue R*, 20 mg of *methyl red R* and 0.2 g of *phenolphthalein R* in *ethanol (96 per cent) R* and dilute to 100 mL with the same solvent. Filter.

Brucine. $C_{23}H_{26}N_2O_4,2H_2O$. (M_r 430.5). *1013100.* [357-57-3]. 10,11-Dimethoxystrychnine.

Colourless crystals, slightly soluble in water, freely soluble in ethanol (96 per cent).

mp: about 178 °C.

Butanal. C_4H_8O. (M_r 72.1). *1134400.* [123-72-8]. Butyraldehyde.

d_{20}^{20}: 0.806.

n_D^{20}: 1.380.

bp: 75 °C.

Butane-1,4-diol. $HO(CH_2)_4OH$. (M_r 90.12). *1174800.* [110-63-4].

Butanol. $C_4H_{10}O$. (M_r 74.1). *1013200.* [71-36-3]. Butan-1-ol.

Clear, colourless liquid, miscible with ethanol (96 per cent).

d_{20}^{20}: about 0.81.

bp: 116 °C to 119 °C.

2-Butanol R1. $C_4H_{10}O$. (M_r 74.1). *1013301.* [78-92-2]. Butan-2-ol. *sec*-Butyl alcohol.

Content: minimum 99.0 per cent.

Clear, colourless liquid, soluble in water, miscible with ethanol (96 per cent).

d_{20}^{20}: about 0.81.

Distillation range (*2.2.11*). Not less than 95 per cent distils between 99 °C and 100 °C.

Assay. Gas chromatography (*2.2.28*) as prescribed in the monograph *Isopropyl alcohol (0970)*.

Butyl acetate. $C_6H_{12}O_2$. (M_r 116.2). *1013400.* [123-86-4].

Clear, colourless liquid, flammable, slightly soluble in water, miscible with ethanol (96 per cent).

d_{20}^{20}: about 0.88.

n_D^{20}: about 1.395.

Distillation range (*2.2.11*). Not less than 95 per cent distils between 123 °C and 126 °C.

Butyl acetate R1. *1013401.*

Content: minimum 99.5 per cent, determined by gas chromatography.

Clear, colourless liquid, flammable, slightly soluble in water, miscible with ethanol (96 per cent).

d_{20}^{20}: about 0.883.

n_D^{20}: about 1.395.

Butanol: maximum 0.2 per cent, determined by gas chromatography.

n-Butyl formate: maximum 0.1 per cent, determined by gas chromatography.

n-Butyl propionate: maximum 0.1 per cent, determined by gas chromatography.

Water: maximum 0.1 per cent.

Butylamine. $C_4H_{11}N$. (M_r 73.1). *1013600.* [109-73-9]. Butan-1-amine.

Distil and use within one month.

Colourless liquid, miscible with water, with ethanol (96 per cent).

n_D^{20}: about 1.401.

bp: about 78 °C.

***tert*-Butylamine.** *1100900.* [75-64-9].

See *1,1-dimethylethylamine R*.

Butylated hydroxytoluene. *1013800.* [128-37-0].

See *Butylhydroxytoluene R*.

Butylboronic acid. $C_4H_{11}BO_2$. (M_r 101.9). *1013700.* [4426-47-5].

Content: minimum 98 per cent.

mp: 90 °C to 92 °C.

***tert*-Butylhydroperoxide.** $C_4H_{10}O_2$. (M_r 90.1). *1118000.* [75-91-2]. 1,1-Dimethylethylhydroperoxide.

Flammable liquid, soluble in organic solvents.

d_{20}^{20}: 0.898.

n_D^{20}: 1.401.

bp: 35 °C.

Butyl 4-hydroxybenzoate. *1103900.* [94-26-8].

See *Butyl parahydroxybenzoate R*.

Butylhydroxytoluene. *1013800.* [128-37-0].

See *Butylhydroxytoluene (0581)*.

Butyl methacrylate. $C_8H_{14}O_2$. (M_r 142.2). *1145400.* [97-88-1]. Butyl 2-methylpropenoate.

Clear, colourless solution.

d_4^{20}: about 0.894.

n_D^{20}: about 1.424.

bp: about 163 °C.

***tert*-Butyl methyl ether.** *1013900.* [1634-04-4].

See *1,1-dimethylethyl methyl ether R*.

Butyl parahydroxybenzoate. *1103900.* [94-26-8].

See *Butyl parahydroxybenzoate (0881)*.

Butyric acid. $C_4H_8O_2$. (M_r 88.1). *1014000.* [107-92-6]. Butanoic acid.

Content: minimum 99.0 per cent.

Oily liquid, miscible with water and with ethanol (96 per cent).

d_{20}^{20}: about 0.96.

n_D^{20}: about 1.398.

bp: about 163 °C.

Butyrolactone. $C_4H_6O_2$. (M_r 86.1). *1104000.* [96-48-0]. Dihydro-2(3*H*)-furanone. γ-Butyrolactone.

Oily liquid, miscible with water, soluble in methanol.

n_D^{25}: about 1.435.

bp: about 204 °C.

Cadmium. Cd. (A_r 112.4). *1014100.* [7440-43-9].

Silvery-white, lustrous metal, practically insoluble in water, freely soluble in nitric acid and in hot hydrochloric acid.

Cadmium nitrate tetrahydrate. $Cd(NO_3)_2,4H_2O$. (M_r 308.5). *1174900.* [10022-68-1].

Hygroscopic orthorhombic crystals, very soluble in water, soluble in acetone and in ethanol (96 per cent).

mp: about 59.5 °C.

Caesium chloride. CsCl. (M_r 168.4). *1014200.* [7647-17-8].

White or almost white powder, very soluble in water, freely soluble in methanol, practically insoluble in acetone.

Caffeic acid. $C_9H_8O_4$. (M_r 180.2). *1014300.* [331-39-5]. (*E*)-3-(3,4-Dihydroxyphenyl)propenoic acid.

White or almost white crystals or plates, freely soluble in hot water and in ethanol (96 per cent), sparingly soluble in cold water.

mp: about 225 °C, with decomposition.

Absorbance (*2.2.25*). A freshly prepared solution at pH 7.6 shows 2 absorption maxima at 293 nm and 329 nm.

Caffeine. *1014400.* [58-08-2].

See *Caffeine (0267)*.

Calcium carbonate. *1014500.* [471-34-1].

See *Calcium carbonate (0014)*.

Calcium carbonate R1. *1014501.*

Complies with the requirements prescribed for *calcium carbonate R* with the following additional requirement.

Chlorides (*2.4.4*): maximum 50 ppm.

Calcium chloride. *1014600.* [10035-04-8].

See *Calcium chloride (0015).*

Calcium chloride solution. *1014601.*

A 73.5 g/L solution.

Calcium chloride solution, 0.01 M. *1014602.*

Dissolve 0.147 g of *calcium chloride R* in *water R* and dilute to 100.0 mL with the same solvent.

Calcium chloride solution, 0.02 M. *1014603.*

Dissolve 2.94 g of *calcium chloride R* in 900 mL of *water R*, adjust to pH 6.0 to 6.2 and dilute to 1000.0 mL with *water R*.

Storage: at 2 °C to 8 °C.

Calcium chloride solution, 0.025 M. *1014604.*

Dissolve 0.368 g of *calcium chloride R* in *water R* and dilute to 100.0 mL with the same solvent.

Calcium chloride R1. $CaCl_2,4H_2O$. (M_r 183.1). *1014700.* Calcium chloride tetrahydrate.

Iron: maximum 0.05 ppm.

Calcium chloride, anhydrous. $CaCl_2$. (M_r 111.0). *1014800.* [10043-52-4].

Content: minimum 98.0 per cent (dried substance).

White or almost white granules, deliquescent, very soluble in water, freely soluble in ethanol (96 per cent) and in methanol.

Loss on drying (*2.2.32*): maximum 5.0 per cent, determined by drying in an oven at 200 °C.

Storage: in an airtight container, protected from moisture.

Calcium hydroxide. $Ca(OH)_2$. (M_r 74.1). *1015000.* [1305-62-0]. Calcium dihydroxide.

White or almost white powder, almost completely soluble in 600 parts of water.

Calcium hydroxide solution. *1015001.*

A freshly prepared saturated solution.

Calcium lactate. *1015100.* [41372-22-9].

See *Calcium lactate pentahydrate (0468).*

Calcium phosphate monobasic monohydrate. $CaH_4O_8P_2,H_2O$. (M_r 252.1). *1157200.* [10031-30-8]. Calcium tetrahydrogen bisphosphate monohydrate. Phosphoric acid calcium salt (2:1) monohydrate.

White or almost white, crystalline powder, soluble in water.

Calcium sulfate. $CaSO_4,{}^1/_2H_2O$. (M_r 145.1). *1015200.* [10034-76-1]. Calcium sulfate hemihydrate.

White or almost white powder, soluble in about 1500 parts of water, practically insoluble in ethanol (96 per cent). When mixed with half its mass of water it rapidly solidifies to a hard and porous mass.

Calcium sulfate solution. *1015201.*

Shake 5 g of *calcium sulfate R* with 100 mL of *water R* for 1 h and filter.

Calconecarboxylic acid. $C_{21}H_{14}N_2O_7S,3H_2O$. ($M_r$ 492.5). *1015300.* [3737-95-9]. 2-Hydroxy-1-(2-hydroxy-4-sulfo-1-naphthylazo)naphthalene-3-carboxylic acid.

Brownish-black powder, slightly soluble in water, very slightly soluble in acetone and in ethanol (96 per cent), sparingly soluble in dilute solutions of sodium hydroxide.

Calconecarboxylic acid triturate. *1015301.*

Mix 1 part of *calconecarboxylic acid R* with 99 parts of *sodium chloride R*.

Test for sensitivity. Dissolve 50 mg of calconecarboxylic acid triturate in a mixture of 2 mL of *strong sodium hydroxide solution R* and 100 mL of *water R*. The solution is blue but becomes violet on addition of 1 mL of a 10 g/L solution of *magnesium sulfate R* and 0.1 mL of a 1.5 g/L solution of *calcium chloride R* and turns pure blue on addition of 0.15 mL of *0.01 M sodium edetate.*

Camphene. $C_{10}H_{16}$. (M_r 136.2). *1139200.* [79-92-5]. 2,2-Dimethyl-3-methylenebicyclo[2.2.1]heptane.

Camphene used in gas chromatography complies with the following additional test.

Assay. Gas chromatography (*2.2.28*) as prescribed in the monograph *Rosemary Oil (1846).*

Content: minimum 90 per cent, calculated by the normalisation procedure.

Camphor. *1113000.* [76-22-2].

See *Camphor, racemic (0655).*

Camphor used in gas chromatography complies with the following additional test.

Assay. Gas chromatography (*2.2.28*) as prescribed in the monograph *Lavender oil (1338).*

Test solution. A 10 g/L solution of the substance to be examined in *hexane R*.

Content: minimum 95.0 per cent, calculated by the normalisation procedure.

(1*S*)-(+)-10-Camphorsulfonic acid. $C_{10}H_{16}O_4S$. (M_r 232.3). *1104100.* [3144-16-9]. (1*S*,4*R*)-(+)-2-Oxo-10-bornenesulfonic acid. [(1*S*)-7,7-Dimethyl-2-oxobicyclo[2.2.1]heptan-1-yl]methanesulfonic acid. Reychler's acid.

Prismatic crystals, hygroscopic, soluble in water.

Content: minimum 99.0 per cent of (1*S*)-(+)-10-camphorsulfonic acid.

$[\alpha]_D^{20}$: + 20 ± 1, determined on a 43 g/L solution.

mp: about 194 °C, with decomposition.

ΔA (*2.2.41*): 10.2×10^3 determined at 290.5 nm on a 1.0 g/L solution.

Capric acid. $C_{10}H_{20}O_2$. (M_r 172.3). *1142000.* [334-48-5]. Decanoic acid.

Crystalline solid, very slightly soluble in water, soluble in anhydrous ethanol.

bp: about 270 °C.

mp: about 31.4 °C.

Capric acid used in the assay of total fatty acids in Saw palmetto fruit (1848) complies with the following additional test.

Assay. Gas chromatography (*2.2.28*) as prescribed in the monograph *Saw palmetto fruit (1848).*

Content: minimum 98 per cent, calculated by the normalisation procedure.

Capric alcohol. *1024700.*

See *Decanol R*.

Caproic acid. $C_6H_{12}O_2$. (M_r 116.2). *1142100.* [142-62-1]. Hexanoic acid.

Oily liquid, sparingly soluble in water.

d_4^{20}: about 0.926.

n_D^{20}: about 1.417.

bp: about 205 °C.

Caproic acid used in the assay of total fatty acids in Saw palmetto fruit (1848) complies with the following additional test.

Assay. Gas chromatography (*2.2.28*) as prescribed in the monograph *Saw palmetto fruit (1848).*

Content: minimum 98 per cent, calculated by the normalisation procedure.

ε-Caprolactam. $C_6H_{11}NO$. (M_r 113.2). *1104200.* [105-60-2]. Hexane-6-lactam.

Hygroscopic flakes, freely soluble in water, in anhydrous ethanol and in methanol.

mp: about 70 °C.

Caprylic acid. $C_8H_{16}O_2$. (M_r 144.2). *1142200.* [124-07-2]. Octanoic acid.

Slightly yellow, oily liquid.

d_4^{20}: about 0.910.

n_D^{20}: about 1.428.

bp: about 239.7 °C.

mp: about 16.7 °C.

Caprylic acid used in the assay of total fatty acids in Saw palmetto fruit (1848) complies with the following additional test.

Assay. Gas chromatography (*2.2.28*) as prescribed in the monograph *Saw palmetto fruit (1848)*.

Content: minimum 98 per cent, calculated by the normalisation procedure.

Capsaicin. $C_{18}H_{27}NO_3$. (M_r 305.4). *1147900.* [404-86-4]. (*E*)-*N*-[(4-Hydroxy-3-methoxyphenyl)methyl]-8-methylnon-6-enamide.

White or almost white, crystalline powder, practically insoluble in water, freely soluble in anhydrous ethanol.

mp: about 65 °C.

Capsaicin used in the assay in Capsicum (1859) complies with the following additional test.

Assay. Liquid chromatography (*2.2.29*) as prescribed in the monograph *Capsicum (1859)*.

Content: minimum 95.0 per cent, calculated by the normalisation procedure.

Carbazole. $C_{12}H_9N$. (M_r 167.2). *1015400.* [86-74-8]. Dibenzopyrrole.

Crystals, practically insoluble in water, freely soluble in acetone, slightly soluble in anhydrous ethanol.

mp: about 245 °C.

Carbomer. *1015500.* [9007-20-9].

A cross-linked polymer of acrylic acid; it contains a large proportion (56 per cent to 68 per cent) of carboxylic acid (CO_2H) groups after drying at 80 °C for 1 h. Average relative molecular mass about 3×10^6.

pH (*2.2.3*): about 3 for a 10 g/L suspension.

Carbon dioxide. *1015600.* [124-38-9].

See *Carbon dioxide (0375)*.

Carbon dioxide R1. CO_2. (M_r 44.01). *1015700.* [124-38-9].

Content: minimum 99.995 per cent *V/V*.

Carbon monoxide: less than 5 ppm.

Oxygen: less than 25 ppm.

Nitric oxide: less than 1 ppm.

Carbon dioxide R2. CO_2. (M_r 44.01). *1134500.* [124-38-9].

Content: minimum 99 per cent *V/V*.

Carbon disulfide. CS_2. (M_r 76.1). *1015800.* [75-15-0].

Colourless or yellowish, flammable liquid, practically insoluble in water, miscible with anhydrous ethanol.

d_{20}^{20}: about 1.26.

bp: 46 °C to 47 °C.

Carbon for chromatography, graphitised. *1015900.*

Carbon chains having a length greater than C_9.

Particle size: 400 µm to 850 µm.

Relative density: 0.72.

Surface area: 10 m^2/g.

Do not use at a temperature higher than 400 °C.

Carbon for chromatography, graphitised R1. *1153500.*

Porous spherical carbon particles comprised of flat sheets of hexagonally arranged carbon atoms.

Particle size: 5 µm to 7 µm.

Pore volume: 0.7 cm^3/g.

Carbon monoxide. CO. (M_r 28.01). *1016000.* [630-08-0].

Content: minimum 99.97 per cent *V/V*.

Carbon monoxide R1. CO. (M_r 28.01). *1134600.* [630-08-0].

Content: minimum 99 per cent *V/V*.

Carbon tetrachloride. CCl_4. (M_r 153.8). *1016100.* [56-23-5]. Tetrachloromethane.

Clear, colourless liquid, practically insoluble in water, miscible with ethanol (96 per cent).

d_{20}^{20}: 1.595 to 1.598.

bp: 76 °C to 77 °C.

Carbophenothion. $C_{11}H_{16}ClO_2PS_3$. (M_r 342.9). *1016200.* [786-19-6]. *O,O*-Diethyl *S*-[[(4-chlorophenyl)thio]methyl]-phosphorodithioate.

Yellowish liquid, practically insoluble in water, miscible with organic solvents.

d_4^{25}: about 1.27.

For the monograph *Wool Fat (0134)*, a suitable certified reference solution (10 ng/µL in iso-octane) may be used.

Car-3-ene. $C_{10}H_{16}$. (M_r 136.2). *1124000.* [498-15-7]. 3,7,7-Trimethylbicyclo[4.1.0]hept-3-ene. 4,7,7-Trimethyl-3-norcarene.

Liquid with a pungent odour, slightly soluble in water, soluble in organic solvents.

d_{20}^{20}: about 0.864.

n_D^{20}: 1.473 to 1.474.

$[\alpha]_D^{20}$: + 15 to + 17.

bp: 170 °C to 172 °C.

Car-3-ene used in gas chromatography complies with the following additional test.

Assay. Gas chromatography (*2.2.28*) as prescribed in the monograph *Nutmeg oil (1552)*.

Content: minimum 95.0 per cent, calculated by the normalisation procedure.

Carminic acid. $C_{22}H_{20}O_{13}$. (M_r 492.4). *1156700.* [1260-17-9]. 7-α-D-Glucopyranosyl-3,5,6,8-tetrahydroxy-1-methyl-9,10-dioxo-9,10-dihydroanthracene-2-carboxylic acid.

Dark red powder, very slightly soluble in water, soluble in dimethyl sulfoxide, very slightly soluble in ethanol (96 per cent).

Carob bean gum. *1104500.*

The ground endosperm of the fruit kernels of *Ceratonia siliqua* L. Taub.

White or almost white powder containing 70 per cent to 80 per cent of a water-soluble gum consisting mainly of galactomannoglycone.

Carvacrol. $C_{10}H_{14}O$. (M_r 150.2). *1016400.* [499-75-2]. 5-Isopropyl-2-methylphenol.

Brownish liquid, practically insoluble in water, very soluble in ethanol (96 per cent).

d_{20}^{20}: about 0.975.

n_D^{20}: about 1.523.

bp: about 237 °C.

Carvacrol used in gas chromatography complies with the following additional test.

Assay. Gas chromatography (*2.2.28*) as prescribed in the monograph *Peppermint oil (0405)*.

Test solution. Dissolve 0.1 g in about 10 mL of *acetone R*.

Content: minimum 95.0 per cent, calculated by the normalisation procedure.

Carveol. $C_{10}H_{16}O$. (M_r 152.2). *1160400.* [99-48-9]. *p*-Mentha-1(6),8-dien-2-ol. 2-Methyl-5-(1-methylethenyl)cyclohex-2-enol.

The substance contains a variable content of *trans*- and *cis*-carveol.

Carveol used in gas chromatography complies with the following additional test.

Assay. Gas chromatography (*2.2.28*) as prescribed in the test for chromatographic profile in the monograph *Caraway oil (1817)*.

Content: minimum 97 per cent, calculated by the normalisation procedure.

Carvone. $C_{10}H_{14}O$. (M_r 150.2). *1016500.* [2244-16-8]. (+)-*p*-Mentha-6,8-dien-2-one. (5*S*)-2-Methyl-5-(1-methylethenyl)-cyclohex-2-enone.

Liquid, practically insoluble in water, miscible with ethanol (96 per cent).

d_{20}^{20}: about 0.965

n_D^{20}: about 1.500.

$[\alpha]_D^{20}$: about + 61.

bp: about 230 °C.

Carvone used in gas chromatography complies with the following additional test.

Assay. Gas chromatography (*2.2.28*) as prescribed in the monograph *Peppermint oil (0405)* using the substance to be examined as the test solution.

Content: minimum 98.0 per cent, calculated by the normalisation procedure.

Carvone R1. *1016501.*

Complies with the requirements prescribed for *carvone R* with the following additional requirement.

Assay. Gas chromatography (*2.2.28*) as prescribed in the test for chiral purity in the monograph *Caraway oil (1817)*.

Content: minimum 98 per cent.

(−)-Carvone. $C_{10}H_{14}O$. (M_r 150.2). *1160500.* [6485-40-1]. (−)-*p*-Mentha-1(6),8-dien-2-one. (5*R*)-2-Methyl-5-(1-methylethenyl)cyclohex-2-enone.

Liquid.

d_{20}^{20}: about 0.965.

n_D^{20}: about 1.4988.

$[\alpha]_D^{20}$: about − 62.

bp: about 230 °C.

Assay. Gas chromatography (*2.2.28*) as prescribed in the test for chiral purity in the monograph *Caraway oil (1817)*.

Content: minimum 99 per cent.

β-Caryophyllene. $C_{15}H_{24}$. (M_r 204.4). *1101000.* [87-44-5]. (*E*)-(1*R*,9*S*)-4,11,11-Trimethyl-8-methylene-bicyclo[7.2.0]undec-4-ene.

Oily liquid, practically insoluble in water, miscible with ethanol (96 per cent).

β-Caryophyllene used in gas chromatography complies with the following additional test.

Assay. Gas chromatography (*2.2.28*) as prescribed in the monograph *Clove oil (1091)*.

Test solution. The substance to be examined.

Content: minimum 90.0 per cent, calculated by the normalisation procedure.

Caryophyllene oxide. $C_{15}H_{24}O$. (M_r 220.4). *1149000.* [1139-30-6]. (-)-β-Caryophyllene epoxide. (1*R*,4*R*,6*R*,10*S*)-4,12,12-Trimethyl-9-methylene-5-oxatricyclo[8.2.0.0^{4,6}]dodecane.

Colourless, fine crystals with lumps.

mp: 62 °C to 63 °C.

Caryophyllene oxide used in gas chromatography complies with the following additional test.

Assay. Gas chromatography (*2.2.28*) as prescribed in the monograph *Turpentine oil, Pinus pinaster type (1627)*.

Content: minimum 99.0 per cent, calculated by the normalisation procedure.

Casein. *1016600.* [9000-71-9].

Mixture of related phosphoproteins obtained from milk.

White or almost white, amorphous powder or granules, very slightly soluble in water and in non-polar organic solvents. It dissolves in concentrated hydrochloric acid giving a pale-violet solution. It forms salts with acids and bases. Its isoelectric point is at about pH 4.7. Alkaline solutions are laevorotatory.

Casticin. $C_{19}H_{18}O_8$. (M_r 374.3). *1162200.* [479-91-4]. 5-Hydroxy-2-(3-hydroxy-4-methoxyphenyl)-3,6,7-trimethoxy-4*H*-1-benzopyran-4-one.

Yellow crystals.

Catalpol. $C_{15}H_{22}O_{10}$. (M_r 362.3). *1142300.* [2415-24-9]. (1a*S*,1b*S*,2*S*,5a*R*,6*S*,6a*S*)-6-Hydroxy-1a-(hydroxymethyl)-1a,1b,2,5a,6,6a-hexahydrooxireno[4,5]cyclopenta[1,2-*c*]pyran-2-yl β-D-glucopyranoside.

mp: 203 °C to 205 °C.

Catechin. $C_{15}H_{14}O_6,xH_2O$. (M_r 290.3 for the anhydrous substance). *1119000.* [154-23-4]. (+)-(2*R*,3*S*)-2-(3,4-Dihydroxyphenyl)-3,4-dihydro-2*H*-chromene-3,5,7-triol. Catechol. Cianidanol. Cyanidol.

Cation-exchange resin. *1016700.*

A resin in protonated form with sulfonic acid groups attached to a polymer lattice consisting of polystyrene cross-linked with 8 per cent of divinylbenzene. It is available as beads and the particle size is specified after the name of the reagent in the tests where it is used.

Cation-exchange resin R1. *1121900.*

A resin in protonated form with sulfonic acid groups attached to a polymer lattice consisting of polystyrene cross-linked with 4 per cent of divinylbenzene. It is available as beads and the particle size is specified after the name of the reagent in the tests where it is used.

Cation-exchange resin, strong. *1156800.*

Strong cation-exchange resin in protonated form with sulfonic acid groups attached to a polymer lattice consisting of polystyrene cross-linked with divinylbenzene. The particle size is specified after the name of the reagent in the tests where it is used.

Cation-exchange resin (calcium form), strong. *1104600.*

Resin in calcium form with sulfonic acid groups attached to a polymer lattice consisting of polystyrene cross-linked with 8 per cent of divinylbenzene. The particle size is specified after the name of the reagent in the tests where it is used.

Cation-exchange resin (sodium form), strong. *1176100.*

Resin in sodium form with sulfonic acid groups attached to a polymer lattice consisting of polystyrene cross-linked with divinylbenzene. The particle size is specified after the name of the reagent in the tests where it is used.

Cellulose for chromatography. *1016800.* [9004-34-6].
Fine, white or almost white, homogeneous powder with an average particle size less than 30 µm.
Preparation of a thin layer. Suspend 15 g in 100 mL of *water R* and homogenise in an electric mixer for 60 s. Coat carefully cleaned plates with a layer 0.1 mm thick using a spreading device. Allow to dry in air.

Cellulose for chromatography R1. *1016900.*
Microcrystalline cellulose. A fine, white or almost white homogeneous powder with an average particle size less than 30 µm.
Preparation of a thin layer. Suspend 25 g in 90 mL of *water R* and homogenise in an electric mixer for 60 s. Coat carefully cleaned plates with a layer 0.1 mm thick using a spreading device. Allow to dry in air.

Cellulose for chromatography F_{254}. *1017000.*
Microcrystalline cellulose F_{254}. A fine, white or almost white, homogeneous powder with an average particle size less than 30 µm, containing a fluorescent indicator having an optimal intensity at 254 nm.
Preparation of a thin layer. Suspend 25 g in 100 mL of *water R* and homogenise using an electric mixer for 60 s. Coat carefully cleaned plates with a layer 0.1 mm thick using a spreading device. Allow to dry in air.

Cerium sulfate. $Ce(SO_4)_2,4H_2O$. (M_r 404.3). *1017300.* [10294-42-5]. Cerium(IV) sulfate tetrahydrate. Ceric sulfate.
Yellow or orange-yellow, crystalline powder or crystals, very slightly soluble in water, slowly soluble in dilute acids.

Cerous nitrate. $Ce(NO_3)_3,6H_2O$. (M_r 434.3). *1017400.* [10294-41-4]. Cerium trinitrate hexahydrate.
Colourless or pale yellow, crystalline powder, freely soluble in water and in ethanol (96 per cent).

Cetostearyl alcohol. *1017500.* [67762-27-0].
See *Cetostearyl alcohol (0702).*

Cetrimide. *1017600.* [8044-71-1].
See *Cetrimide (0378).*

Cetyl alcohol. $C_{16}H_{34}O$. (M_r 242.4). *1160600.* [36653-82-4]. Hexadecan-1-ol.
Content: minimum 95.0 per cent.
mp: about 48 °C.

Cetylpyridinium chloride monohydrate. $C_{21}H_{38}ClN,H_2O$. (M_r 358.0). *1162800.* [6004-24-6]. 1-Hexadecylpyridinium chloride monohydrate.
White or almost white powder, freely soluble in water and in ethanol (96 per cent).
mp: 80 °C to 83 °C.

Cetyltrimethylammonium bromide. $C_{19}H_{42}BrN$. (M_r 364.5). *1017700.* [57-09-0]. Cetrimonium bromide. *N*-Hexadecyl-*N,N,N*-trimethylammonium bromide.
White or almost white, crystalline powder, soluble in water, freely soluble in ethanol (96 per cent).
mp: about 240 °C.

Chamazulene. $C_{14}H_{16}$. (M_r 184.3). *1148000.* [529-05-5]. 7-Ethyl-1,4-dimethylazulene.
Blue liquid, very slightly soluble in water, soluble in ethanol (96 per cent), miscible with fatty oils, with essential oils and with liquid paraffin, soluble with discolouration in phosphoric acid (85 per cent *m/m*) and sulfuric acid (50 per cent *V/V*).
Appearance of solution. 50 mg is soluble in 2.5 mL of *hexane R*. The blue solution is clear in a thin-layer obtained by tilting the test-tube.
Chamazulene used for gas chromatography complies with the following additional test.
Assay. Gas chromatography (*2.2.28*) as prescribed in the monograph *Matricaria oil (1836).*
Test solution: a 4 g/L solution in *cyclohexane R*.
Content: minimum 95.0 per cent, calculated by the normalisation procedure.

Charcoal, activated. *1017800.* [64365-11-3].
See *Activated charcoal (0313).*

Chloral hydrate. *1017900.* [302-17-0].
See *Choral hydrate (0265).*

Chloral hydrate solution. *1017901.*
A solution of 80 g in 20 mL of *water R*.

Chloramine. *1018000.* [7080-50-4].
See *Tosylchloramide sodium (0381).*

Chloramine solution. *1018001.*
A 20 g/L solution. Prepare immediately before use.

Chloramine solution R1. *1018002.*
A 0.1 g/L solution of *chloramine R*. Prepare immediately before use.

Chloramine solution R2. *1018003.*
A 0.2 g/L solution. Prepare immediately before use.

Chlordane. $C_{10}H_6Cl_8$. (M_r 409.8). *1124100.* [12789-03-6].
bp: about 175 °C.
mp: about 106 °C.
A suitable certified reference solution of technical grade (10 ng/µL in iso-octane) may be used.

Chlordiazepoxide. *1113200.* [58-25-3].
See *Chlordiazepoxide (0656).*

Chlorfenvinphos. $C_{12}H_{14}Cl_3O_4P$. (M_r 359.6). *1124200.* [470-90-6].
A suitable certified reference solution (10 ng/µL in cyclohexane) may be used.

Chloroacetanilide. C_8H_8ClNO. (M_r 169.6). *1018100.* [539-03-7]. 4′-Chloroacetanilide.
Content: minimum 95 per cent.
Crystalline powder, practically insoluble in water, soluble in ethanol (96 per cent).
mp: about 178 °C.

Chloroacetic acid. $C_2H_3ClO_2$. (M_r 94.5). *1018200.* [79-11-8].
Colourless or white or almost white crystals, deliquescent, very soluble in water, soluble in ethanol (96 per cent).
Storage: in an airtight container.

Chloroaniline. C_6H_6ClN. (M_r 127.6). *1018300.* [106-47-8]. 4-Chloroaniline.
Crystals, soluble in hot water, freely soluble in ethanol (96 per cent).
mp: about 71 °C.

4-Chlorobenzenesulfonamide. $C_6H_6ClNO_2S$. (M_r 191.6). *1097400.* [98-64-6].
White or almost white powder.
mp: about 145 °C.

2-Chlorobenzoic acid. $C_7H_5ClO_2$. (M_r 156.6). *1139300.* [118-91-2].
Soluble in water, slightly soluble in anhydrous ethanol.
bp: about 285 °C.
mp: about 140 °C.

Chlorobutanol. *1018400.* [57-15-8].
See *Anhydrous chlorobutanol (0382).*

2-Chloro-2-deoxy-D-glucose. $C_6H_{11}ClO_5$. (M_r 198.6). *1134700.* [14685-79-1].

White or almost white crystalline, very hygroscopic powder, soluble in water and in dimethyl sulfoxide, practically insoluble in ethanol (96 per cent).

2-Chloroethanol. C_2H_5ClO. (M_r 80.5). *1097500.* [107-07-3].

Colourless liquid, soluble in ethanol (96 per cent).

d_{20}^{20}: about 1.197.

n_D^{20}: about 1.442.

bp: about 130 °C.

mp: about – 89 °C.

2-Chloroethanol solution. *1097501.*

Dissolve 125 mg of *2-chloroethanol R* in *2-propanol R* and dilute to 50 mL with the same solvent. Dilute 5 mL of the solution to 50 mL with *2-propanol R*.

Chloroethylamine hydrochloride. $C_2H_7Cl_2N$. (M_r 116.0). *1124300.* [870-24-6]. 2-Chloroethanamine hydrochloride.

mp: about 145 °C.

(2-Chloroethyl)diethylamine hydrochloride. $C_6H_{15}Cl_2N$. (M_r 172.1). *1018500.* [869-24-9].

White or almost white, crystalline powder, very soluble in water and in methanol, freely soluble in methylene chloride, practically insoluble in hexane.

mp: about 211 °C.

Chloroform. $CHCl_3$. (M_r 119.4). *1018600.* [67-66-3]. Trichloromethane.

Clear, colourless liquid, slightly soluble in water, miscible with ethanol (96 per cent).

d_{20}^{20}: 1.475 to 1.481.

bp: about 60 °C.

Ethanol: 0.4 per cent *m/m* to 1.0 per cent *m/m*.

Introduce 1.00 g (*m* g) into a ground-glass-stoppered flask. Add 15.0 mL of *nitrochromic reagent R*, close the flask, shake vigorously for 2 min and allow to stand for 15 min. Add 100 mL of *water R* and 5 mL of a 200 g/L solution of *potassium iodide R*. After 2 min titrate with *0.1 M sodium thiosulfate*, using 1 mL of *starch solution R* as indicator, until a light green colour is obtained (n_1 mL of *0.1 M sodium thiosulfate*). Carry out a blank assay (n_2 mL of *0.1 M sodium thiosulfate*). Calculate the percentage of ethanol using the following expression:

$$\frac{(n_2 - n_1)\,0.115}{m}$$

Chloroform, acidified. *1018601.*

To 100 mL of *chloroform R* add 10 mL of *hydrochloric acid R*. Shake, allow to stand and separate the 2 layers.

Chloroform, ethanol-free. *1018602.*

Shake 200 mL of *chloroform R* with four quantities, each of 100 mL, of *water R*. Dry over 20 g of *anhydrous sodium sulfate R* for 24 h. Distil the filtrate over 10 g of *anhydrous sodium sulfate R*. Discard the first 20 mL of distillate. Prepare immediately before use.

Chloroform stabilised with amylene. $CHCl_3$. (M_r 119.4). *1018700.*

Clear, colourless liquid, slightly soluble in water, miscible with ethanol (96 per cent).

Water: maximum 0.05 per cent.

Residue on evaporation: maximum 0.001 per cent.

Minimum transmittance (*2.2.25*) using *water R* as compensation liquid: 50 per cent at 255 nm, 80 per cent at 260 nm, 98 per cent at 300 nm.

Content: minimum 99.8 per cent of $CHCl_3$, determined by gas chromatography.

Chlorogenic acid. $C_{16}H_{18}O_9$. (M_r 354.3). *1104700.* [327-97-9]. (1*S*,3*R*,4*R*,5*R*)-3-[(3,4-Dihydroxycinnamoyl)oxy]-1,4,5-trihydroxycyclohexanecarboxylic acid.

White or almost white, crystalline powder or needles, freely soluble in boiling water, in acetone and in ethanol (96 per cent).

$[\alpha]_D^{26}$: about – 35.2.

mp: about 208 °C.

Chromatography. Thin-layer chromatography (*2.2.27*) as prescribed on Identification A in the monograph *Belladonna leaf dry extract, standardised (1294)*; the chromatogram shows only one principal zone.

Chlorogenic acid used in liquid chromatography complies with the following additional test.

Assay. Liquid chromatography (*2.2.29*) as prescribed in the monograph *Artichoke Leaf (1866)*.

Content: minimum 97.0 per cent.

3-Chloro-2-methylaniline. C_7H_8ClN. (M_r 141.6). *1139400.* [87-60-5]. 6-Chloro-2-toluidine.

Not miscible with water, slightly soluble in anhydrous ethanol.

d_{20}^{20}: about 1.171.

n_D^{20}: about 1.587.

bp: about 115 °C.

mp: about 2 °C.

2-Chloro-*N*-(2,6-dimethylphenyl)acetamide. $C_{10}H_{12}ClNO$. (M_r 197.7). *1168700.* [1131-01-7].

2-Chloronicotinic acid. $C_6H_4ClNO_2$. (M_r 157.6). *1157300.* [2942-59-8]. 2-Chloropyridine-3-carboxylic acid.

White or almost white powder.

mp: about 177 °C.

Content: minimum 95 per cent.

2-Chloro-4-nitroaniline. $C_6H_5ClN_2O_2$. (M_r 172.6). *1018800.* [121-87-9].

Yellow, crystalline powder, freely soluble in methanol.

mp: about 107 °C.

Storage: protected from light.

2-Chloro-5-nitrobenzoic acid. $C_7H_4ClNO_4$. (M_r 201.6). *1183800.* [2516-96-3].

mp: 165 °C to 168 °C.

Chlorophenol. C_6H_5ClO. (M_r 128.6). *1018900.* [106-48-9]. 4-Chlorophenol.

Colourless or almost colourless crystals, slightly soluble in water, very soluble in ethanol (96 per cent) and in solutions of alkali hydroxides.

mp: about 42 °C.

Chloroplatinic acid. $H_2Cl_6Pt,6H_2O$. (M_r 517.9). *1019000.* [18497-13-7]. Hydrogen hexachloroplatinate(IV) hexahydrate.

Content: minimum 37.0 per cent *m/m* of platinum (A_r 195.1).

Brownish-red crystals or a crystalline mass, very soluble in water, soluble in ethanol (96 per cent).

Assay. Ignite 0.200 g to constant mass at 900 ± 50 °C and weigh the residue (platinum).

Storage: protected from light.

3-Chloropropane-1,2-diol. $C_3H_7ClO_2$. (M_r 110.5). *1097600.* [96-24-2].

Colourless liquid, soluble in water and ethanol (96 per cent).

d_{20}^{20}: about 1.322.

n_D^{20}: about 1.480.

bp: about 213 °C.

5-Chloroquinolin-8-ol. C_9H_6ClNO. (M_r 179.6). *1156900.* [130-16-5]. 5-Chlorooxine.

Sparingly soluble in cold dilute hydrochloric acid.

mp: about 123 °C.

Content: minimum 95.0 per cent.

4-Chlororesorcinol. $C_6H_5ClO_2$. (M_r 144.6). *1177700.* [95-88-5]. 4-Chlorobenzene-1,3-diol. 1,3-Dihydroxy-4-chlorobenzene.

mp: 106 °C to 108 °C.

5-Chlorosalicylic acid. $C_7H_5ClO_3$. (M_r 172.6). *1019100.* [321-14-2].

White or almost white, crystalline powder, soluble in methanol.

mp: about 173 °C.

Chlorothiazide. $C_7H_6ClN_3O_4S_2$. (M_r 295.7). *1112100.* [58-94-6]. 6-Chloro-2*H*-1,2,4-benzothiadiazine-7-sulfonamide 1,1-dioxide.

Content: minimum 98.0 per cent.

White or almost white, crystalline powder, very slightly soluble in water, sparingly soluble in acetone, slightly soluble in ethanol (96 per cent). It dissolves in dilute solutions of alkali hydroxides.

Chlorotrimethylsilane. C_3H_9ClSi. (M_r 108.6). *1019300.* [75-77-4].

Clear, colourless liquid, fuming in air.

d_{20}^{20}: about 0.86.

n_D^{20}: about 1.388.

bp: about 57 °C.

Chlorpyriphos. $C_9H_{11}Cl_3NO_3PS$. (M_r 350.6). *1124400.* [2921-88-2].

bp: about 200 °C.

mp: 42 °C to 44 °C.

A suitable certified reference solution (10 ng/µL in cyclohexane) may be used.

Chlorpyriphos-methyl. $C_7H_7Cl_3NO_3PS$. (M_r 322.5). *1124500.* [5598-13-0].

mp: 45 °C to 47 °C.

A suitable certified reference solution (10 ng/µL in cyclohexane) may be used.

Chlortetracycline hydrochloride. *1145500.*

See *Chlortetracycline hydrochloride (0173).*

(5α)-Cholestane. $C_{27}H_{48}$. (M_r 372.7). *1167900.* [481-21-0].

Slightly soluble in anhydrous ethanol.

mp: about 81 °C.

Cholesterol. *1019400.* [57-88-5].

See *Cholesterol (0993).*

Choline chloride. $C_5H_{14}ClNO$. (M_r 139.6). *1019500.* [67-48-1]. (2-Hydroxyethyl)trimethylammonium chloride.

Deliquescent crystals, very soluble in water and in ethanol (96 per cent).

Chromatography. Thin-layer chromatography (*2.2.27*) as prescribed in the monograph *Suxamethonium chloride (0248)*: apply 5 µL of a 0.2 g/L solution in *methanol R*; the chromatogram shows one principal spot.

Storage: in an airtight container.

Chondroitinase ABC. *1162900.*

Pectin lyase-like enzyme secreted by *Flavobacterium heparinum*. Available in vials containing 5-10 units. It cleaves both glucuronate-containing disaccharides, e.g. chondroitin sulfate, and iduronate-containing disaccharides, e.g. dermatan sulfate.

Chondroitinase AC. *1163000.*

Pectin lyase-like enzyme secreted by *Flavobacterium heparinum*. Available in vials containing 5-10 units. It cleaves only glucuronate-containing disaccharides, e.g. chondroitin sulfate.

Chromazurol S. $C_{23}H_{13}Cl_2Na_3O_9S$. (M_r 605). *1019600.* [1667-99-8].

Schultz No. 841.

Colour Index No. 43825.

Trisodium 5-[(3-carboxylato-5-methyl-4-oxocyclohexa-2,5-dien-1-ylidene)(2,6-dichloro-3-sulfonatophenyl)methyl]-2-hydroxy-3-methylbenzoate.

Brownish-black powder, soluble in water, slightly soluble in ethanol (96 per cent).

Chromic acid cleansing mixture. *1019700.*

A saturated solution of *chromium trioxide R* in *sulfuric acid R*.

Chromic potassium sulfate. $CrK(SO_4)_2,12H_2O$. (M_r 499.4). *1019800.* [7788-99-0]. Chrome alum.

Large, violet-red or black crystals, freely soluble in water, practically insoluble in ethanol (96 per cent).

Chromium(III) acetylacetonate. $C_{15}H_{21}CrO_6$. (M_r 349.3). *1172900.* [21679-31-2]. (*OC*-6-11)-Tris(2,4-pentanedionato-κ*O*,κ*O*′)chromium.

Chromium(III) trichloride hexahydrate. $[Cr(H_2O)_4Cl_2]Cl,2H_2O$. (M_r 266.5). *1104800.* [10060-12-5].

Dark green crystalline powder, hygroscopic.

Storage: protected from humidity and oxidising agents.

Chromium trioxide. CrO_3. (M_r 100.0). *1019900.* [1333-82-0].

Dark brownish-red needles or granules, deliquescent, very soluble in water.

Storage: in an airtight glass container.

Chromogenic substrate R1. *1020000.*

Dissolve *N*-α-benzyloxycarbonyl-D-arginyl-L-glycyl-L-arginine-4-nitroanilide dihydrochloride in *water R* to give a 0.003 M solution. Dilute in *tris(hydroxymethyl)aminomethane-EDTA buffer solution pH 8.4 R* to 0.0005 M before use.

Chromogenic substrate R2. *1020100.*

Dissolve D-phenylalanyl-L-pipecolyl-L-arginine-4-nitroanilide dihydrochloride in *water R* to give a 0.003 M solution. Dilute before use in titrating in *tris(hydroxymethyl)aminomethane-EDTA buffer solution pH 8.4 R* to give a 0.0005 M solution.

Chromogenic substrate R3. *1149100.*

Dissolve D-valyl-leucyl-lysyl-4-nitroanilide dihydrochloride in *water R* to give a 0.003 M solution.

Chromogenic substrate R4. *1163100.*

Dissolve D-phenylalanyl-L-pipecolyl-L-arginine-4-nitroanilide dihydrochloride in *water R* to give a 0.008 M solution. Dilute to 0.0025 M with *phosphate buffer solution pH 8.5 R* before use.

Chromogenic substrate R5. *1163200.*

Dissolve *N*-benzoyl-L-isoleucyl-L-glutamyl-glycyl-L-arginine-4-nitroanilide hydrochloride in *water R* to give a 0.003 M solution.

Chromotrope II B. $C_{16}H_9N_3Na_2O_{10}S_2$. ($M_r$ 513.4). *1020200.* [548-80-1].

Schultz No. 67.

Colour Index No. 16575.

Disodium 4,5-dihydroxy-3-(4-nitrophenylazo)naphthalene-2,7-disulfonate.

Reddish-brown powder, soluble in water giving a yellowish-red colour, practically insoluble in ethanol (96 per cent).

Chromotrope II B solution. *1020201.*

A 0.05 g/L solution in *sulfuric acid R*.

Chromotropic acid, sodium salt. $C_{10}H_6Na_2O_8S_2,2H_2O$. ($M_r$ 400.3). *1020300.* [5808-22-0].

Schultz No. 1136.

Disodium 4,5-dihydroxynaphthalene-2,7-disulfonate dihydrate. Disodium 1,8-dihydroxynaphthalene-3,6-disulfonate dihydrate.

A yellowish-white powder, soluble in water, practically insoluble in ethanol (96 per cent).

Chromotropic acid, sodium salt solution. *1020301.*

Dissolve 0.60 g of *chromotropic acid, sodium salt R* in about 80 mL of *water R* and dilute to 100 mL with the same solvent. Use this solution within 24 h.

Chromotropic acid-sulfuric acid solution. *1020302.*

Dissolve 5 mg of *chromotropic acid, sodium salt R* in 10 mL of a mixture of 9 mL of *sulfuric acid R* and 4 mL of *water R*.

Chrysanthemin. $C_{21}H_{21}ClO_{11}$. (M_r 485.8). *1134800.* [7084-24-4]. Cyanidin 3-*O*-glucoside chloride. Kuromanin chloride. 2-(3,4-Dihydroxyphenyl)-3-(β-D-glucopyranosyl)oxy-5,7-dihydroxy-1-benzopyrylium chloride.

Reddish-brown crystalline powder, soluble in water and in ethanol (96 per cent).

Absorbance (*2.2.25*). A 0.01 g/L solution in a mixture of 1 volume of *hydrochloric acid R* and 999 volumes of *methanol R* shows an absorption maximum at 528 nm.

α-Chymotrypsin for peptide mapping. *1142400.*

α-Chymotrypsin of high purity, treated to eliminate tryptic activity.

Cimifugin. $C_{16}H_{18}O_6$. (M_r 306.3). *1181700.* [37921-38-3]. (2*S*)-7-(Hydroxymethyl)-2-(1-hydroxy-1-methylethyl)-4-methoxy-2,3-dihydro-5*H*-furo[3,2-*g*][1]benzopyran-5-one.

Cinchonidine. $C_{19}H_{22}N_2O$. (M_r 294.4). *1020400.* [485-71-2]. (*R*)-(Quinol-4-yl)[(2*S*,4*S*,5*R*)-5-vinylquinuclidin-2-yl]methanol.

White or almost white, crystalline powder, very slightly soluble in water and in light petroleum, soluble in ethanol (96 per cent).

$[\alpha]_D^{20}$: − 105 to − 110, determined on a 50 g/L solution in *ethanol (96 per cent) R*.

mp: about 208 °C, with decomposition.

Storage: protected from light.

Cinchonine. $C_{19}H_{22}N_2O$. (M_r 294.4). *1020500.* [118-10-5]. (*S*)-(Quinol-4-yl)[(2*R*,4*S*,5*R*)-5-vinylquinuclidin-2-yl]methanol.

White or almost white, crystalline powder, very slightly soluble in water, sparingly soluble in ethanol (96 per cent) and in methanol.

$[\alpha]_D^{20}$: + 225 to + 230, determined on a 50 g/L solution in *ethanol (96 per cent) R*.

mp: about 263 °C.

Storage: protected from light.

Cineole. $C_{10}H_{18}O$. (M_r 154.3). *1020600.* [470-82-6]. 1,8-Cineole. Eucalyptol. 1,8-Epoxy-*p*-menthane.

Colourless liquid, practically insoluble in water, miscible with anhydrous ethanol.

d_{20}^{20}: 0.922 to 0.927.

n_D^{20}: 1.456 to 1.459.

Freezing point (*2.2.18*): 0 °C to 1 °C.

Distillation range (*2.2.11*): 174 °C to 177 °C.

Phenol. Shake 1 g with 20 mL of *water R*. Allow to separate and add to 10 mL of the aqueous layer 0.1 mL of *ferric chloride solution R1*. No violet colour develops.

Turpentine oil. Dissolve 1 g in 5 mL of *ethanol (90 per cent V/V) R*. Add dropwise freshly prepared *bromine water R*. Not more than 0.5 mL is required to give a yellow colour lasting for 30 min.

Residue on evaporation: maximum 0.05 per cent.

To 10.0 mL add 25 mL of *water R*, evaporate on a water-bath and dry the residue to constant mass at 100-105 °C.

Cineole used in gas chromatography complies with the following additional test.

Assay. Gas chromatography (*2.2.28*) as prescribed in the monograph *Peppermint oil (0405)*.

Test solution. The substance to be examined.

Content: minimum 98.0 per cent, calculated by the normalisation procedure.

1,4-Cineole. $C_{10}H_{18}O$. (M_r 154.3). *1142500.* [470-67-7]. 1-Methyl-4-(1-methylethyl)-7-oxabicyclo[2.2.1]heptane. 1-Isopropyl-4-methyl-7-oxabicyclo[2.2.1]heptane.

Colourless liquid.

d_4^{20}: about 0.900.

n_D^{20}: about 1.445.

bp: about 173 °C.

Cinnamamide. C_9H_9NO. (M_r 147.2). *1154800.* [621-79-4]. (*E*)-3-Phenylprop-2-enamide.

White or almost white powder.

mp: about 149 °C.

***trans*-Cinnamic acid.** $C_9H_8O_2$. (M_r 148.2). *1159200.* [140-10-3]. *trans*-3-Phenylacrylic acid. (2*E*)-3-Phenylprop-2-enoic acid.

Colourless crystals, very slightly soluble in water, freely soluble in ethanol (96 per cent).

mp: 133 °C.

Cinnamic aldehyde. C_9H_8O. (M_r 132.2). *1020700.* [104-55-2]. 3-Phenylpropenal.

Yellowish or greenish-yellow, oily liquid, slightly soluble in water, very soluble in ethanol (96 per cent).

n_D^{20}: about 1.620.

Storage: protected from light.

***trans*-Cinnamic aldehyde.** C_9H_8O. (M_r 132.2). *1124600.* [14371-10-9]. *(E)*-3-Phenylprop-2-enal.

trans-Cinnamic aldehyde used in gas chromatography complies with the following additional test.

Assay. Gas chromatography (*2.2.28*) as prescribed in the monograph *Cassia oil (1496)*.

Content: minimum 99.0 per cent, calculated by the normalisation procedure.

Cinnamyl acetate. $C_{11}H_{12}O_2$. (M_r 176.2). *1124700.* [103-54-8]. 3-Phenylprop-2-en-1-yl acetate.

n_D^{20}: about 1.542.

bp: about 262 °C.

Cinnamyl acetate used in gas chromatography complies with the following additional test.

Assay. Gas chromatography (*2.2.28*) as prescribed in the monograph *Cassia oil (1496)*.

Content: minimum 99.0 per cent, calculated by the normalisation procedure.

Citral. $C_{10}H_{16}O$. (M_r 152.2). *1020800.* [5392-40-5]. Mixture of (2*E*)- and (2*Z*)-3,7-Dimethylocta-2,6-dienal.

Light yellow liquid, practically insoluble in water, miscible with ethanol (96 per cent) and with propylene glycol.

Chromatography. Thin-layer chromatography (*2.2.27*), using *silica gel* GF_{254} *R* as the coating substance: apply to the plate 10 µL of a 1 g/L solution in *toluene R*. Develop over a path of 15 cm using a mixture of 15 volumes of *ethyl acetate R* and

85 volumes of *toluene R*. Allow the plate to dry in air and examine in ultraviolet light at 254 nm. The chromatogram shows only one principal spot.

Citral used in gas chromatography complies with the following additional test.

Assay. Gas chromatography (*2.2.28*) as prescribed in the monograph *Citronella oil (1609)*.

Content of citral (neral + geranial): minimum 95.0 per cent, calculated by the normalisation procedure.

Citrated rabbit plasma. *1020900.*

Collect blood by intracardiac puncture from a rabbit kept fasting for 12 h, using a plastic syringe with a No. 1 needle containing a suitable volume of 38 g/L solution of *sodium citrate R* so that the final volume ratio of citrate solution to blood is 1 : 9. Separate the plasma by centrifugation at 1500 *g* to 1800 *g* at 15 °C to 20 °C for 30 min.

Storage: at 0 °C to 6 °C; use within 4 h of collection.

Citric acid. *1021000.* [5949-29-1].

See *Citric acid monohydrate (0456)*.

When used in the test for iron, it complies with the following additional requirement.

Dissolve 0.5 g in 10 mL of *water R*, add 0.1 mL of *thioglycollic acid R*, mix and make alkaline with *ammonia R*. Dilute to 20 mL with *water R*. No pink colour appears in the solution.

Citric acid, anhydrous. *1021200.* [77-92-9].

See *Anhydrous citric acid (0455)*.

Citronellal. $C_{10}H_{18}O$. (M_r 154.3). *1113300.* [106-23-0]. 3,7-Dimethyl-6-octenal.

Very slightly soluble in water, soluble in ethanol (96 per cent).

d_{20}^{20}: 0.848 to 0.856.

n_D^{20}: about 1.446.

Citronellal used in gas chromatography complies with the following additional test.

Assay. Gas chromatography (*2.2.28*) as prescribed in the monograph *Citronella oil (1609)*.

Content: minimum 95.0 per cent, calculated by the normalisation procedure.

Citronellol. $C_{10}H_{20}O$. (M_r 156.3). *1134900.* [106-22-9]. 3,7-Dimethyloct-6-en-1-ol.

Clear, colourless liquid, practically insoluble in water, miscible with ethanol (96 per cent).

d_{20}^{20}: 0.857.

n_D^{20}: 1.456.

bp: 220 °C to 222 °C.

Citronellol used in gas chromatography complies with the following additional test.

Assay. Gas chromatography (*2.2.28*) as prescribed in the monograph *Citronella oil (1609)*.

Content: minimum 95.0 per cent, calculated by the normalisation procedure.

Storage: in an airtight container, protected from light.

Citronellyl acetate. $C_{12}H_{22}O_2$. (M_r 198.3). *1135000.* [150-84-5]. 3,7-Dimethyl-6-octen-1-yl acetate.

d_{20}^{20}: 0.890.

n_D^{20}: 1.443.

bp: 229 °C.

Citronellyl acetate used in gas chromatography complies with the following additional test.

Assay. Gas chromatography (*2.2.28*) as prescribed in the monograph *Citronella oil (1609)*.

Content: minimum 97.0 per cent, calculated by the normalisation procedure.

Storage: in an airtight container, protected from light.

Citropten. $C_{11}H_{10}O_4$. (M_r 206.2). *1021300.* [487-06-9]. Limettin. 5,7-Dimethoxy-2*H*-1-benzopyran-2-one.

Needle-shaped crystals, practically insoluble in water and in light petroleum, freely soluble in acetone and in ethanol (96 per cent).

mp: about 145 °C.

Chromatography. Thin-layer chromatography (*2.2.27*), using *silica gel GF$_{254}$ R* as the coating substance: apply to the plate 10 µL of a 1 g/L solution in *toluene R*. Develop over a path of 15 cm using a mixture of 15 volumes of *ethyl acetate R* and 85 volumes of *toluene R*. Allow the plate to dry in air and examine in ultraviolet light at 254 nm. The chromatogram obtained shows only one principal spot.

Clobetasol propionate. $C_{25}H_{32}ClFO_5$. (M_r 467.0). *1097700.* [25122-46-7]. 21-Chloro-9-fluoro-11β,17-dihydroxy-16β-methylpregna-1,4-diene-3,20-dione 17-propionate.

White or almost white crystalline powder, insoluble in water, soluble in ethanol (96 per cent) and in acetone.

$[\alpha]_D^{20}$: about + 104 (in dioxan).

mp: about 196 °C.

Coagulation factor V solution. *1021400.*

Coagulation factor V solution may be prepared by the following method or by any other method which excludes factor VIII.

Prepare the factor V reagent from fresh oxalated bovine plasma, by fractionation at 4 °C with a saturated solution of *ammonium sulfate R* prepared at 4 °C. Separate the fraction which precipitates between 38 per cent and 50 per cent of saturation, which contains factor V without significant contamination with factor VIII. Remove the ammonium sulfate by dialysis and dilute the solution with a 9 g/L solution of *sodium chloride R* to give a solution containing between 10 per cent and 20 per cent of the quantity of factor V present in fresh human normal plasma.

Assay of factor V. Prepare two dilutions of the preparation of factor V in *imidazole buffer solution pH 7.3 R* containing 1 volume of the preparation in 10 volumes and in 20 volumes of the buffer solution respectively. Test each dilution as follows: mix 0.1 mL of *plasma substrate deficient in factor V R*, 0.1 mL of the solution to be examined, 0.1 mL of *thromboplastin R* and 0.1 mL of a 3.5 g/L solution of *calcium chloride R* and measure the coagulation times, i.e. the interval between the moment at which the calcium chloride solution is added and the first indication of the formation of fibrin, which may be observed visually or by means of a suitable apparatus.

In the same manner, determine the coagulation time (in duplicate) of four dilutions of human normal plasma in *imidazole buffer solution pH 7.3 R*, containing respectively, 1 volume in 10 (equivalent to 100 per cent of factor V), 1 volume in 50 (20 per cent), 1 volume in 100 (10 per cent), and 1 volume in 1000 (1 per cent). Using two-way logarithmic paper plot the average coagulation times for each dilution of human plasma against the equivalent percentage of factor V and read the percentage of factor V for the two dilutions of the factor V solution by interpolation. The mean of the two results gives the percentage of factor V in the solution to be examined.

Storage: in the frozen state at a temperature not higher than – 20 °C.

Cobalt chloride. $CoCl_2,6H_2O$. (M_r 237.9). *1021600.* [7791-13-1].

Red, crystalline powder or deep-red crystals, very soluble in water, soluble in ethanol (96 per cent).

Cobalt nitrate. $Co(NO_3)_2,6H_2O$. (M_r 291.0). *1021700.* [10026-22-9].

Small garnet-red crystals, very soluble in water.

Codeine. *1021800.* [6059-47-8].

See *Codeine (0076)*.

Codeine phosphate. *1021900.* [52-28-8].
See *Codeine phosphate hemihydrate (0074).*

Congo red. $C_{32}H_{22}N_6Na_2O_6S_2$. ($M_r$ 697). *1022000.* [573-58-0].
Schultz No. 360.
Colour Index No. 22120.
Disodium (biphenyl-4,4′-diyl-bis-2,2′-azo)bis(1-amino-naphthalene-4-sulfonate).
Brownish-red powder, soluble in water.

Congo red paper. *1022002.*
Immerse strips of filter paper for a few minutes in *congo red solution R*. Allow to dry.

Congo red solution. *1022001.*
Dissolve 0.1 g of *congo red R* in a mixture of 20 mL of *ethanol (96 per cent) R* and *water R* and dilute to 100 mL with *water R*.
Test for sensitivity. To 0.2 mL of the congo red solution add 100 mL of *carbon dioxide-free water R* and 0.3 mL of *0.1 M hydrochloric acid*. The solution is blue. Not more than 0.3 mL of *0.1 M sodium hydroxide* is required to change the colour to pink.
Colour change: pH 3.0 (blue) to pH 5.0 (pink).

Coomassie blue. *1001400.* [3861-73-2].
See *acid blue 92 R*.

Coomassie blue solution. *1001401.*
See *acid blue 92 solution R*.

Coomassie staining solution. *1012201.*
A 1.25 g/L solution of *acid blue 83 R* in a mixture consisting of 1 volume of *glacial acetic acid R*, 4 volumes of *methanol R* and 5 volumes of *water R*. Filter.

Coomassie staining solution R1. *1173000.*
Dissolve 0.275 g of *acid blue 83 R* in 200 mL of *methanol R*. Stir until complete dissolution of the crystals (for about 2 h). Add 750 mL of *water R* and 50 mL of *glacial acetic acid R*. Stir overnight (for at least 16 h); filter.

Copper. Cu. (A_r 63.55). *1022100.* [7440-50-8].
Cleaned foil, turnings, wire or powder of the pure metal of electrolytic grade.

Copper acetate. $C_4H_6CuO_4,H_2O$. (M_r 199.7). *1022200.* [142-71-2].
Blue-green crystals or powder, freely soluble in boiling water, soluble in water and in ethanol (96 per cent), slightly soluble in glycerol (85 per cent).

Copper edetate solution. *1022300.*
To 2 mL of a 20 g/L solution of *copper acetate R* add 2 mL of *0.1 M sodium edetate* and dilute to 50 mL with *water R*.

Copper nitrate. $Cu(NO_3)_2,3H_2O$. (M_r 241.6). *1022400.* [10031-43-3]. Chloride dinitrate trihydrate.
Dark blue crystals, hygroscopic, very soluble in water giving a strongly acid reaction, freely soluble in ethanol (96 per cent) and in dilute nitric acid.
Storage: in an airtight container.

Copper sulfate. $CuSO_4,5H_2O$. (M_r 249.7). *1022500.* [7758-99-8].
Blue powder or deep-blue crystals, slowly efflorescent, very soluble in water, slightly soluble in ethanol (96 per cent).

Copper sulfate solution. *1022501.*
A 125 g/L solution.

Copper tetrammine, ammoniacal solution of. *1022600.*
Dissolve 34.5 g of *copper sulfate R* in 100 mL of *water R* and, whilst stirring, add dropwise *concentrated ammonia R* until the precipitate which forms dissolves completely. Keeping the temperature below 20 °C, add dropwise with continuous shaking 30 mL of *strong sodium hydroxide solution R*. Filter through a sintered-glass filter (40) (*2.1.2*), wash with *water R* until the filtrate is clear and take up the precipitate with 200 mL of *concentrated ammonia R*. Filter through a sintered-glass filter (*2.1.2*) and repeat the filtration to reduce the residue to a minimum.

Cortisone. $C_{21}H_{28}O_5$. (M_r 360.4). *1175000.* [53-06-5].
Content: minimum 95.0 per cent.
mp: 223-228 °C.

Cortisone acetate. *1097800.* [50-04-4].
See *Cortisone acetate (0321).*

Coumaphos. $C_{14}H_{16}ClO_5PS$. (M_r 362.8). *1124800.* [56-72-4].
mp: 91 °C to 92 °C.
A suitable certified reference solution (10 ng/µL in iso-octane) may be used.

***o*-Coumaric acid.** $C_9H_8O_3$. (M_r 164.2). *1157400.* [614-60-8]. (*E*)-2-Hydroxycinnamic acid. (2*E*)-3-(2-Hydroxyphenyl)prop-2-enoic acid.
White or almost white powder.
mp: about 217 °C.

***p*-Coumaric acid.** $C_9H_8O_3$. (M_r 164.2). *1157500.* [7400-08-0]. 4-Hydroxycinnamic acid. 3-(4-Hydroxyphenyl)-prop-2-enoic acid.
White or almost white needles, practically insoluble in water, soluble in acetone and in methanol.
mp: 214 °C to 217 °C.
p-Coumaric acid used in the assay in Nettle leaf (1897) complies with the following additional tests.
Loss on drying (*2.2.32*): maximum 5.0 per cent, determined on 0.200 g by drying in an oven at 105 °C for 2 h.
Assay. Liquid chromatography (*2.2.29*) as prescribed in the monograph *Nettle leaf (1897)*.
Content: minimum 95 per cent, calculated by the normalisation procedure.

Coumarin. $C_9H_6O_2$. (M_r 146.1). *1124900.* [91-64-5]. 2*H*-Chromen-2-one. 2*H*-1-Benzopyran-2-one.
Colourless, crystalline powder or orthorhombic or rectangular crystals, very soluble in boiling water, soluble in ethanol (96 per cent). It dissolves in solutions of alkali hydroxides.
mp: 68 °C to 70 °C.
Coumarin used in gas chromatography complies with the following additional test.
Assay. Gas chromatography (*2.2.28*) as prescribed in the monograph *Cassia oil (1496)*.
Content: minimum 98.0 per cent, calculated by the normalisation procedure.

Cresol. C_7H_8O. (M_r 108.1). *1022700.* [95-48-7]. *o*-Cresol. 2-Methylphenol.
Crystals or a super-cooled liquid becoming dark on exposure to light and air, miscible with anhydrous ethanol, soluble in about 50 parts of water and soluble in solutions of alkali hydroxides.
d_{20}^{20}: about 1.05.
n_D^{20}: 1.540 to 1.550.
bp: about 190 °C.
Freezing point (*2.2.18*): minimum 30.5 °C.
Residue on evaporation: maximum 0.1 per cent *m/m*, determined by evaporating on a water-bath and drying in an oven at 100-105 °C.
Storage: protected from light, moisture and oxygen.
Distil before use.

***m*-Cresol.** *1177100.* [108-39-4].

See *metacresol (2077)*.

***p*-Cresol.** C_7H_8O. (M_r 108.1). *1153100.* [106-44-5]. 4-Methylphenol.

Colourless or white or almost white crystals or crystalline mass.

d_{20}^{20}: about 1.02.

bp: about 202 °C.

***m*-Cresol purple.** $C_{21}H_{18}O_5S$. (M_r 382.44). *1121700.* [2303-01-7]. *m*-Cresolsulfonphthalein.

Olive-green, crystalline powder, slightly soluble in water, soluble in ethanol (96 per cent), in glacial acetic acid and in methanol.

***m*-Cresol purple solution.** *1121701.*

Dissolve 0.1 g of *m-cresol purple R* in 13 mL of *0.01 M sodium hydroxide*, dilute to 100 mL with *water R* and mix.

Colour change: pH 1.2 (red) to pH 2.8 (yellow); pH 7.4 (yellow) to pH 9.0 (purple).

Cresol red. $C_{21}H_{18}O_5S$. (M_r 382.4). *1022800.* [1733-12-6]. Cresolsulfonphthalein. 4,4′-(3*H*-2,1-Benzoxathiol-3-ylidene)bis-(2-methylphenol) *S*,*S*-dioxide.

A reddish-brown crystalline powder, slightly soluble in water, soluble in ethanol (96 per cent) and in dilute solutions of alkali hydroxides.

Cresol red solution. *1022801.*

Dissolve 0.1 g of *cresol red R* in a mixture of 2.65 mL of *0.1 M sodium hydroxide* and 20 mL of *ethanol (96 per cent) R* and dilute to 100 mL with *water R*.

Test for sensitivity. A mixture of 0.1 mL of the cresol red solution and 100 mL of *carbon dioxide-free water R* to which 0.15 mL of *0.02 M sodium hydroxide* has been added is purple-red. Not more than 0.15 mL of *0.02 M hydrochloric acid* is required to change the colour to yellow.

Colour change: pH 7.0 (yellow) to pH 8.6 (red).

Crystal violet. $C_{25}H_{30}ClN_3$. (M_r 408.0). *1022900.* [548-62-9].

Schultz No. 78.

Colour Index No. 42555.

Hexamethyl-pararosanilinium chloride.

Dark-green powder or crystals, soluble in water and in ethanol (96 per cent).

Crystal violet solution. *1022901.*

Dissolve 0.5 g of *crystal violet R* in *anhydrous acetic acid R* and dilute to 100 mL with the same solvent.

Test for sensitivity. To 50 mL of *anhydrous acetic acid R* add 0.1 mL of the crystal violet solution. On addition of 0.1 mL of *0.1 M perchloric acid* the bluish-purple solution turns bluish-green.

Cupric chloride. $CuCl_2,2H_2O$. (M_r 170.5). *1023000.* [10125-13-0]. Cupric chloride dihydrate.

Greenish-blue powder or crystals, deliquescent in moist air, efflorescent in dry air, freely soluble in water, in ethanol (96 per cent) and in methanol, sparingly soluble in acetone.

Storage: in an airtight container.

Cupri-citric solution. *1023100.*

Dissolve 25 g of *copper sulfate R*, 50 g of *citric acid R* and 144 g of *anhydrous sodium carbonate R* in *water R* and dilute to 1000 mL with the same solvent.

Cupri-citric solution R1. *1023200.*

Dissolve 25 g of *copper sulfate R*, 50 g of *citric acid R* and 144 g of *anhydrous sodium carbonate R* in *water R* and dilute to 1000 mL with the same solvent.

Adjust the solution so that it complies with the following requirements.

a) To 25.0 mL add 3 g of *potassium iodide R*. Add 25 mL of a 25 per cent *m/m* solution of *sulfuric acid R* with precaution and in small quantities. Titrate with *0.1 M sodium thiosulfate* using 0.5 mL of *starch solution R*, added towards the end of the titration, as indicator.

24.5 mL to 25.5 mL of *0.1 M sodium thiosulfate* is used in the titration.

b) Dilute 10.0 mL to 100.0 mL with *water R* and mix. To 10.0 mL of the solution, add 25.0 mL of *0.1 M hydrochloric acid* and heat for 1 h on a water-bath. Cool, adjust with *water R* to the initial volume and titrate with *0.1 M sodium hydroxide*, using 0.1 mL of *phenolphthalein solution R1* as indicator.

5.7 mL to 6.3 mL of *0.1 M sodium hydroxide* is used in the titration.

c) Dilute 10.0 mL to 100.0 mL with *water R* and mix. Titrate 10.0 mL of the solution with *0.1 M hydrochloric acid*, using 0.1 mL of *phenolphthalein solution R1* as indicator.

6.0 mL to 7.5 mL of *0.1 M hydrochloric acid* is used in the titration.

Cupriethylenediamine hydroxide solution. *3008700.* [14552-35-3].

The molar ratio of ethylenediamine to copper is 2.00 ± 0.04.

This solution is commercially available.

Cupri-tartaric solution. *1023300.*

Solution A. Dissolve 34.6 g of *copper sulfate R* in *water R* and dilute to 500 mL with the same solvent.

Solution B. Dissolve 173 g of *sodium potassium tartrate R* and 50 g of *sodium hydroxide R* in 400 mL of *water R*. Heat to boiling, allow to cool and dilute to 500 mL with *carbon dioxide-free water R*.

Mix equal volumes of the 2 solutions immediately before use.

Cupri-tartaric solution R2. *1023302.*

Add 1 mL of a solution containing 5 g/L of *copper sulfate R* and 10 g/L of *potassium tartrate R* to 50 mL of *sodium carbonate solution R1*. Prepare immediately before use.

Cupri-tartaric solution R3. *1023303.*

Prepare a solution containing 10 g/L of *copper sulfate R* and 20 g/L of *sodium tartrate R*. To 1.0 mL of the solution add 50 mL of *sodium carbonate solution R2*. Prepare immediately before use.

Cupri-tartaric solution R4. *1023304.*

Solution A. 150 g/L *copper sulfate R*.

Solution B. Dissolve 2.5 g of *anhydrous sodium carbonate R*, 2.5 g of *sodium potassium tartrate R*, 2.0 g of *sodium hydrogen carbonate R*, and 20.0 g of *anhydrous sodium sulfate R* in *water R* and dilute to 100 mL with the same solvent.

Mix 1 part of solution A with 25 parts of solution B immediately before use.

Curcumin. $C_{21}H_{20}O_6$. (M_r 368.4). *1023500.* [458-37-7]. 1,7-Bis(4-hydroxy-3-methoxyphenyl)hepta-1,6-diene-3,5-dione.

Orange-brown, crystalline powder, practically insoluble in water, soluble in glacial acetic acid.

mp: about 183 °C.

Curcuminoids. *1183900.*

A mixture of curcumin ($C_{21}H_{20}O_6$; M_r 368.4), demethoxycurcumin ($C_{20}H_{18}O_5$; M_r 338.4) and bis-demethoxycurcumin ($C_{19}H_{16}O_4$; M_r 308.3).

Cyanoacetic acid. $C_3H_3NO_2$. (M_r 85.1). *1097900.* [372-09-8].

White or yellowish-white, hygroscopic crystals, very soluble in water.

Storage: in an airtight container.

Cyanocobalamin. *1023600.* [68-19-9].

See *Cyanocobalamin (0547)*.

Cyanogen bromide solution. *1023700.* [506-68-3].
Add dropwise, with cooling *0.1 M ammonium thiocyanate* to *bromine water R* until the yellow colour disappears. Prepare immediately before use.

Cyanoguanidine. $C_2H_4N_4$. (M_r 84.1). *1023800.* [461-58-5]. Dicyandiamide. 1-Cyanoguanidine.
White or almost white, crystalline powder, sparingly soluble in water and in ethanol (96 per cent), practically insoluble in methylene chloride.
mp: about 210 °C.

α-Cyclodextrin. $C_{36}H_{60}O_{30}$. (M_r 972). *1176200.* [10016-20-3]. Cyclohexakis-(1→4)-(α-D-glucopyranosyl). Cyclomaltohexaose. Alfadex.

β-Cyclodextrin. *1184000.* [7585-39-9].
See *Betadex (1070)*.

β-Cyclodextrin for chiral chromatography, modified. *1154600.*
30 per cent of 2,3-di-*O*-ethyl-6-*O*-*tert*-butyldimethylsilyl-β-cyclodextrin dissolved in *poly(dimethyl)(85)(diphenyl)(15)siloxane R*.

β-Cyclodextrin for chiral chromatography, modified R1. *1160700.*
30 per cent of 2,3-di-*O*-acetyl-6-*O*-*tert*-butylsilyl-β-cyclodextrin dissolved in *poly(dimethyl)(85)(diphenyl)(15)siloxane R*.

Cyclohexane. C_6H_{12}. (M_r 84.2). *1023900.* [110-82-7].
Clear, colourless, flammable liquid, practically insoluble in water, miscible with organic solvents.
d_{20}^{20}: about 0.78.
bp: about 80.5 °C.
Cyclohexane used in spectrophotometry complies with the following additional test.
Minimum transmittance (*2.2.25*) using *water R* as compensation liquid: 45 per cent at 220 nm, 70 per cent at 235 nm, 90 per cent at 240 nm, 98 per cent at 250 nm.

Cyclohexane R1. *1023901.*
Complies with the requirements prescribed for *cyclohexane R* with the following additional requirement.
The fluorescence, measured at 460 nm, under illumination with an excitant light beam at 365 nm, is not more intense than that of a solution containing 0.002 ppm of *quinine R* in *0.05 M sulfuric acid*.

Cyclohexylamine. $C_6H_{13}N$. (M_r 99.2). *1024000.* [108-91-8]. Cyclohexanamine.
Colourless liquid, soluble in water, miscible with usual organic solvents.
n_D^{20}: about 1.460.
bp: 134 °C to 135 °C.

Cyclohexylenedinitrilotetra-acetic acid. $C_{14}H_{22}N_2O_8,H_2O$. (M_r 364.4). *1024100.* *trans*-Cyclohexylene-1,2-dinitrilo-*N,N,N',N'*-tetra-acetic acid.
White or almost white, crystalline powder.
mp: about 204 °C.

Cyclohexylmethanol. $C_7H_{14}O$. (M_r 114.2). *1135200.* [100-49-2]. Cyclohexylcarbinol.
Liquid with a slight odour of camphor, soluble in ethanol (96 per cent).
n_D^{25}: about 1.464.
bp: about 185 °C.

3-Cyclohexylpropionic acid. $C_9H_{16}O_2$. (M_r 156.2). *1119200.* [701-97-3].
Clear liquid.
d_{20}^{20}: about 0.998.
n_D^{20}: about 1.4648.
bp: about 130 °C.

Cyhalothrin. $C_{23}H_{19}ClF_3NO_3$. (M_r 449.9). *1125000.* [91465-08-6].
bp: 187 °C to 190 °C.
mp: about 49 °C.
A suitable certified reference solution (10 ng/μL in cyclohexane) may be used.

***p*-Cymene.** $C_{10}H_{14}$. (M_r 134.2). *1113400.* [99-87-6]. 1-Isopropyl-4-methylbenzene.
Colourless liquid, practically insoluble in water, soluble in ethanol (96 per cent).
d_{20}^{20}: about 0.858.
n_D^{20}: about 1.4895.
bp: 175 °C to 178 °C.
p-Cymene used in gas chromatography complies with the following additional test.
Assay. Gas chromatography (*2.2.28*) as prescribed in the monograph *Peppermint oil (0405)*.
Test solution. The substance to be examined.
Content: minimum 96.0 per cent, calculated by the normalisation procedure.

Cynarin. $C_{25}H_{24}O_{12}$. (M_r 516.4). *1159300.* [30964-13-7]. (1α,3α,4α,5β)-1,3-Bis[[3-(3,4-Dihydroxyphenyl)-1-oxo-2-propenyl]oxy]-4,5-dihydroxycyclohexanecarboxylic acid.
White or almost white amorphous mass, odourless.

Cypermethrin. $C_{22}H_{19}Cl_2NO_3$. (M_r 416.3). *1125100.* [52315-07-8].
bp: 170 °C to 195 °C.
mp: 60 °C to 80 °C.
A suitable certified reference solution (10 ng/μL in cyclohexane) may be used.

L-Cysteine. $C_3H_7NO_2S$. (M_r 121.1). *1024200.* [52-90-4].
Powder, freely soluble in water, in ethanol (96 per cent) and in acetic acid, practically insoluble in acetone.

Cysteine hydrochloride. *1024300.* [7048-04-6].
See *Cysteine hydrochloride monohydrate (0895)*.

L-Cystine. $C_6H_{12}N_2O_4S_2$. (M_r 240.3). *1024400.* [56-89-3].
White or almost white, crystalline powder, practically insoluble in water and in ethanol (96 per cent). It dissolves in dilute solutions of alkali hydroxides.
$[\alpha]_D^{20}$: − 218 to − 224, determined in *1 M hydrochloric acid*.
mp: 250 °C, with decomposition.

Cytosine. $C_4H_5N_3O$. (M_r 111.1). *1160800.* [71-30-7].
Content: minimum 95.0 per cent.

Daidzein. $C_{15}H_{10}O_4$. (M_r 254.2). *1178400.* [486-66-8]. 7-Hydroxy-3-(4-hydroxyphenyl)-4*H*-1-benzopyran-4-one.

Daidzin. $C_{21}H_{20}O_9$. (M_r 416.4). *1178300.* [552-66-9]. Daidzein-7-*O*-glucoside. 7-(β-D-Glucopyranosyloxy)-3-(4-hydroxyphenyl)-4*H*-1-benzopyran-4-one.

Dantron. $C_{14}H_8O_4$. (M_r 240.2). *1024500.* [117-10-2]. 1,8-Dihydroxyanthraquinone. 1,8-Dihydroxyanthracene-9,10-dione.
Crystalline orange powder, practically insoluble in water, slightly soluble in ethanol (96 per cent), soluble in solutions of alkali hydroxides.
mp: about 195 °C.
Dantron used in the sesquiterpenic acids assay in Valerian root (0453) complies with the following additional tests.

$A_{1\,cm}^{1\%}$: 355 to 375, determined at 500 nm in *1 M potassium hydroxide*.

Assay. Liquid chromatography (*2.2.29*) as prescribed in the monograph *Valerian Root (0453)* at the concentration of the reference solution.

Content: minimum 95 per cent, calculated by the normalisation procedure.

***o,p′*-DDD.** $C_{14}H_{10}Cl_4$. (M_r 320.0). *1125200*. [53-19-0]. 1-(2-Chlorophenyl)-1-(4-chlorophenyl)-2,2-dichloroethane.

A suitable certified reference solution (10 ng/µL in cyclohexane) may be used.

***p,p′*-DDD.** $C_{14}H_{10}Cl_4$. (M_r 320.0). *1125300*. [72-54-8]. 1,1-Bis(4-chlorophenyl)-2,2-dichloroethane.

bp: about 193 °C.

mp: about 109 °C.

A suitable certified reference solution (10 ng/µL in cyclohexane) may be used.

***o,p′*-DDE.** $C_{14}H_8Cl_4$. (M_r 318.0). *1125400*. [3424-82-6]. 1-(2-Chlorophenyl)-1-(4-chlorophenyl)-2,2-dichloroethylene.

A suitable certified reference solution (10 ng/µL in cyclohexane) may be used.

***p,p′*-DDE.** $C_{14}H_8Cl_4$. (M_r 318.0). *1125500*. [72-55-9]. 1,1-Bis(4-chlorophenyl)-2,2-dichloroethylene.

bp: 316 °C to 317 °C.

mp: 88 °C to 89 °C.

A suitable certified reference solution (10 ng/µL in cyclohexane) may be used.

***o,p′*-DDT.** $C_{14}H_9Cl_5$. (M_r 354.5). *1125600*. [789-02-6]. 1-(2-Chlorophenyl)-1-(4-chlorophenyl)-2,2,2-trichloroethane.

A suitable certified reference solution (10 ng/µL in cyclohexane) may be used.

***p,p′*-DDT.** $C_{14}H_9Cl_5$. (M_r 354.5). *1125700*. [50-29-3]. 1,1-Bis(4-chlorophenyl)-2,2,2-trichloroethane.

bp: about 260 °C.

mp: 108 °C to 109 °C.

A suitable certified reference solution (10 ng/µL in cyclohexane) may be used.

Decanal. $C_{10}H_{20}O$. (M_r 156.3). *1149200*. [112-31-2]. Decyl aldehyde.

Oily, colourless liquid, practically insoluble in water.

Decanal used in gas chromatography complies with the following additional test.

Assay. Gas chromatography (*2.2.28*) as prescribed in the monograph *Sweet orange oil (1811)*.

Content: minimum 97 per cent, calculated by the normalisation procedure.

Decane. $C_{10}H_{22}$. (M_r 142.3). *1024600*. [124-18-5].

Colourless liquid, practically insoluble in water.

n_D^{20}: about 1.411.

bp: about 174 °C.

Decanol. $C_{10}H_{22}O$. (M_r 158.3). *1024700*. [112-30-1]. Decan-1-ol.

Viscous liquid, solidifying at about 6 °C, practically insoluble in water, soluble in ethanol (96 per cent).

n_D^{20}: about 1.436.

bp: about 230 °C.

Deltamethrin. $C_{22}H_{19}Br_2NO_3$. (M_r 505.2). *1125800*. [52918-63-5].

bp: about 300 °C.

mp: about 98 °C.

A suitable certified reference solution (10 ng/µL in cyclohexane) may be used.

Demeclocycline hydrochloride. *1145600*.

See *Demeclocycline hydrochloride (0176)*.

Demethylflumazenil. $C_{14}H_{12}FN_3O_3$. (M_r 289.3). *1149300*. [79089-72-8]. Ethyl 8-fluoro-6-oxo-5,6-dihydro-4*H*-imidazo[1,5-*a*][1,4]benzodiazepine-3-carboxylate.

Colourless needles, soluble in dimethyl sulfoxide and in hot methanol.

mp: about 288 °C.

2-Deoxy-D-ribose. $C_5H_{10}O_4$. (M_r 134.1). *1163900*. [533-67-5]. Thyminose. 2-Deoxy-D-*erythro*-pentose.

2′-Deoxyuridine. $C_9H_{12}N_2O_5$. (M_r 228.2). *1024800*. [951-78-0]. 1-(2-Deoxy-β-d-*erythro*-pentofuranosyl)-1*H*,3*H*-pyrimidine-2,4-dione.

mp: about 165 °C.

Chromatography. Thin-layer chromatography (*2.2.27*) as prescribed in the monograph *Idoxuridine (0669)*: apply 5 µL of a 0.25 g/L solution; the chromatogram shows only one principal spot.

4-Deoxypyridoxine hydrochloride. $C_8H_{12}NO_2Cl$. (M_r 189.6). *1175500*. [148-51-6]. 5-(Hydroxymethyl)-2,4-dimethylpyridin-3-ol.

Desmethylmisonidazole. $C_6H_9N_3O_4$. (M_r 187.2). *1185600*. [13551-92-3]. (2*RS*)-3-(2-Nitro-1*H*-imidazol-1-yl)propane-1,2-diol.

Content: minimum 95 per cent.

Yellow powder.

Destaining solution. *1012202*.

A mixture consisting of 1 volume of *glacial acetic acid R*, 4 volumes of *methanol R* and 5 volumes of *water R*.

Deuterated acetic acid. $C_2{}^2H_4O_2$. (M_r 64.1). *1101100*. [1186-52-3]. Tetradeuteroacetic acid. Acetic-d_3 acid-*d*.

Degree of deuteration: minimum 99.7 per cent.

d_{20}^{20}: about 1.12.

n_D^{20}: about 1.368.

bp: about 115 °C.

mp: about 16 °C.

Deuterated acetone. $C_3{}^2H_6O$. (M_r 64.1). *1024900*. [666-52-4]. Acetone-d_6. ($^2H_6$)-Acetone.

Degree of deuteration: minimum 99.5 per cent.

Clear, colourless liquid, miscible with water, with dimethylformamide, with anhydrous ethanol and with methanol.

d_{20}^{20}: about 0.87.

n_D^{20}: about 1.357.

bp: about 55 °C.

Water and deuterium oxide. Not more than 0.1 per cent.

Deuterated acetonitrile. $C_2{}^2H_3N$. (M_r 44.1). *1173100*. [2206-26-0].

Degree of deuteration: minimum 99.8 per cent.

Clear, colourless liquid, miscible with water, with acetone and with methanol.

d_{20}^{20}: about 0.78.

n_D^{20}: about 1.344.

Deuterated chloroform. C^2HCl_3. (M_r 120.4). *1025000*. [865-49-6]. (^2H)-Chloroform. Chloroform-*d*.

Degree of deuteration: minimum 99.7 per cent.

Clear, colourless liquid, practically insoluble in water, miscible with acetone and with ethanol (96 per cent). It may be stabilised over silver foil.

d_{20}^{20}: about 1.51.

n_D^{20}: about 1.445.

bp: about 60 °C.

Water and deuterium oxide: maximum 0.05 per cent.

Deuterated dimethyl sulfoxide. $C_2{}^2H_6OS$. (M_r 84.2). *1025100.* [2206-27-1]. ($^2H_6$)-Dimethyl sulfoxide. Dimethyl sulfoxide-d_6.

Degree of deuteration: minimum 99.8 per cent.

Very hygroscopic liquid, practically colourless, viscous, soluble in water, in acetone and in anhydrous ethanol.

d_{20}^{20}: about 1.18.

mp: about 20 °C.

Water and deuterium oxide: maximum 0.1 per cent.

Storage: in an airtight container.

Deuterated methanol. C^2H_4O. (M_r 36.1). *1025200.* [811-98-3]. (^2H)-Methanol. Methanol-*d*.

Degree of deuteration: minimum 99.8 per cent.

Clear, colourless liquid miscible with water, with ethanol (96 per cent) and with methylene chloride.

d_{20}^{20}: about 0.888.

n_D^{20}: about 1.326.

bp: 65.4 °C.

Deuterated sodium trimethylsilylpropionate. $C_6H_9{}^2H_4NaO_2Si$. (M_r 172.3). *1179100.* [24493-21-8]. Sodium 3-(trimethylsilyl)(2,2,3,3-$^2H_4$)propionate. TSP-d_4.

Degree of deuteration: minimum 98 per cent.

White or almost white powder.

Deuterium chloride. ^2HCl. (M_r 37.47). *1178800.* [7698-05-7]. Deuterated hydrochloric acid.

Gas.

Degree of deuteration: minimum 99 per cent.

Caution: *toxic*.

Deuterium chloride solution. *1178801.*

Dilute 1 mL of *deuterium chloride R* (38 per cent *m/m*) with 5 mL of *deuterium oxide R*.

Deuterium oxide. ^2H_2O. (M_r 20.03). *1025300.* [7789-20-0]. Deuterated water.

Degree of deuteration: minimum 99.7 per cent.

d_{20}^{20}: about 1.11.

n_D^{20}: about 1.328.

bp: about 101 °C.

Deuterium oxide R1. ^2H_2O. (M_r 20.03). *1025301.* [7789-20-0]. Deuterated water.

Degree of deuteration: minimum 99.95 per cent.

Developer solution. *1122500.*

Dilute 2.5 mL of a 20 g/L solution of *citric acid R* and 0.27 mL of *formaldehyde R* to 500.0 mL with *water R*.

Dextran for chromatography, cross-linked R2. *1025500.*

Bead-form dextran with a fraction range suitable for the separation of peptides and proteins with relative molecular masses of 15×10^2 to 30×10^3. When dry, the beads have a diameter of 20-80 µm.

Dextran for chromatography, cross-linked R3. *1025600.*

Bead-form dextran with a fraction range suitable for the separation of peptides and proteins with relative molecular masses of 4×10^3 to 15×10^4. When dry, the beads have a diameter of 40-120 µm.

Dextrose. *1025700.* [50-99-7].

See *glucose R*.

3,3′-Diaminobenzidine tetrahydrochloride. $C_{12}H_{18}Cl_4N_4$, $2H_2O$. (M_r 396.1). *1098000.* [7411-49-6]. 3,3′,4,4′-Biphenyl-tetramine.

Almost white or slightly pink powder, soluble in water.

mp: about 280 °C, with decomposition.

Diammonium 2,2′-azinobis(3-ethylbenzothiazoline-6-sulfonate). $C_{18}H_{24}N_6O_6S_4$. (M_r 548.7). *1153000.* [30931-67-0]. ABTS. Diammonium 2,2′-(diazanediylidene)bis[3-ethyl-2,3-dihydrobenzothiazole-6-sulfonate].

Chromogenic substrate suitable for use in ELISA procedures.

Green tablets, freely soluble in water.

pH (*2.2.3*): 4.2 to 5.8 for a 0.1 g/L solution.

Diatomaceous earth. *1025900.* [91053-39-3].

White or almost white, fine granular powder, made up of siliceous frustules of fossil diatoms or of debris of fossil diatoms, practically insoluble in water and in ethanol (96 per cent).

The substance may be identified by microscopic examination with a magnification of × 500.

Diatomaceous earth for gas chromatography. *1026000.*

White or almost white, fine granular powder, made up of siliceous frustules of fossil diatoms or of debris of fossil diatoms, practically insoluble in water and in ethanol (96 per cent). The substance may be identified by microscopic examination with a magnification of × 500. The substance is purified by treating with *hydrochloric acid R* and washing with *water R*.

Particle size: maximum 5 per cent is retained on a sieve No. 180. Maximum 10 per cent passes a sieve No. 125.

Diatomaceous earth for gas chromatography R1. *1026100.*

White or almost white, fine granular powder, made up of siliceous frustules of fossil diatoms or of debris of fossil diatoms, practically insoluble in water and in ethanol (96 per cent). The substance may be identified by microscopic examination with a magnification of × 500. The substance is purified by treating with *hydrochloric acid R* and washing with *water R*.

Particle size. Maximum 5 per cent is retained on a sieve No. 250. Maximum 10 per cent passes a sieve No. 180.

Diatomaceous earth for gas chromatography R2. *1026200.*

White or almost white, fine granular powder with a specific surface area of about 0.5 m^2/g, made up of siliceous frustules of fossil diatoms or of debris of fossil diatoms, practically insoluble in water and in ethanol (96 per cent). The substance may be identified by microscopic examination with a magnification of × 500. The substance is purified by treating with *hydrochloric acid R* and washing with *water R*.

Particle size. Maximum 5 per cent is retained on a sieve No. 180. Maximum 10 per cent passes a sieve No. 125.

Diatomaceous earth for gas chromatography, silanised. *1026300.*

Diatomaceous earth for gas chromatography R silanised with dimethyldichlorosilane or other suitable silanising agents.

Diatomaceous earth for gas chromatography, silanised R1. *1026400.*

Prepared from crushed pink firebrick and silanised with dimethyldichlorosilane or other suitable silanising agents. The substance is purified by treating with *hydrochloric acid R* and washing with *water R*.

Diazinon. $C_{12}H_{21}N_2O_3PS$. (M_r 304.3). *1125900.* [333-41-5].

bp: about 306 °C.

A suitable certified reference solution (10 ng/µL in iso-octane) may be used.

Diazobenzenesulfonic acid solution R1. *1026500.*

Dissolve 0.9 g of *sulfanilic acid R* in a mixture of 30 mL of *dilute hydrochloric acid R* and 70 mL of *water R*. To 3 mL of the solution add 3 mL of a 50 g/L solution of *sodium nitrite R*. Cool in an ice-bath for 5 min, add 12 mL of the sodium nitrite solution and cool again. Dilute to 100 mL with *water R* and keep the reagent in an ice-bath. Prepare extemporaneously but allow to stand for 15 min before use.

Dibutylamine. $C_8H_{19}N$. (M_r 129.3). *1126000.* [111-92-2]. *N*-Butylbutan-1-amine.

Colourless liquid.

n_D^{20}: about 1.417.

bp: about 159 °C.

Dibutylammonium phosphate for ion-pairing. *1168800.*

A colourless solution of 10 per cent to 15 per cent *V/V* of di-*n*-butylamine and 12 per cent to 17 per cent *V/V* of phosphoric acid in water, suitable for ion-pairing in liquid chromatography.

Dibutyl ether. $C_8H_{18}O$. (M_r 130.2). *1026700.* [142-96-1].

Colourless, flammable liquid, practically insoluble in water, miscible with anhydrous ethanol.

d_{20}^{20}: about 0.77.

n_D^{20}: about 1.399.

Do not distil if the dibutyl ether does not comply with the test for peroxides.

Peroxides. Place 8 mL of *potassium iodide and starch solution R* in a 12 mL ground-glass-stoppered cylinder about 1.5 cm in diameter. Fill completely with the substance to be examined, shake vigorously and allow to stand protected from light for 30 min. No colour is produced.

The name and concentration of any added stabiliser are stated on the label.

Dibutyl phthalate. $C_{16}H_{22}O_4$. (M_r 278.3). *1026800.* [84-74-2]. Dibutyl benzene-1,2-dicarboxylate.

Clear, colourless or faintly coloured, oily liquid, very slightly soluble in water, miscible with acetone and with ethanol (96 per cent).

d_{20}^{20}: 1.043 to 1.048.

n_D^{20}: 1.490 to 1.495.

Dicarboxidine hydrochloride. $C_{20}H_{26}Cl_2N_2O_6$. (M_r 461.3). *1026900.* [56455-90-4]. 4,4′-[(4,4′-Diaminobiphenyl-3,3′-diyl)dioxy]dibutanoic acid dihydrochloride.

Dichlofenthion. $C_{10}H_{13}Cl_2O_3PS$. (M_r 315.2). *1126100.* [97-17-6].

A suitable certified reference solution (10 ng/µL in cyclohexane) may be used.

Dichloroacetic acid. $C_2H_2Cl_2O_2$. (M_r 128.9). *1027000.* [79-43-6].

Colourless liquid, miscible with water and ethanol (96 per cent).

d_{20}^{20}: about 1.566.

n_D^{20}: about 1.466.

bp: about 193 °C.

Dichloroacetic acid solution. *1027001.*

Dilute 67 mL of *dichloroacetic acid R* to 300 mL with *water R* and neutralise to *blue litmus paper R* using *ammonia R*. Cool, add 33 mL of *dichloroacetic acid R* and dilute to 600 mL with *water R*.

3,5-Dichloroaniline. $C_6H_5Cl_2N$. (M_r 162.0). *1177800.* [626-43-7]. 3,5-dichlorophenylamine.

mp: 46 °C to 52 °C.

Dichlorobenzene. $C_6H_4Cl_2$. (M_r 147.0). *1027100.* [95-50-1]. 1,2-Dichlorobenzene.

Colourless, oily liquid, practically insoluble in water, soluble in anhydrous ethanol.

d_{20}^{20}: about 1.31.

bp: about 180 °C.

2,4-Dichlorobenzoic acid. $C_7H_4Cl_2O_2$. (M_r 191.0). *1185700.* [50-84-0].

Faintly beige powder.

mp: about 160 °C.

2,3-Dichloro-5,6-dicyanobenzoquinone. $C_8Cl_2N_2O_2$. (M_r 227.0). *1153600.* [84-58-2]. 4,5-Dichloro-3,6-dioxo-cyclohexa-1,4-diene-1,2-dicarbonitrile.

Yellow or orange crystals, soluble in dioxan and in acetic acid, slightly soluble in methylene chloride. It decomposes in water.

mp: about 214 °C.

Storage: at a temperature of 2 °C to 8 °C.

(*S*)-3,5-Dichloro-2,6-dihydroxy-*N*-[(1-ethylpyrrolidin-2-yl)methyl]benzamide hydrobromide. $C_{14}H_{19}BrCl_2N_2O_3$. (M_r 414.1). *1142600.* [113310-88-6].

White or almost white, crystalline powder.

$[\alpha]_D^{22}$: + 11.4, determined on a 15.0 g/L solution in *anhydrous ethanol R*.

mp: about 212 °C.

Dichlorofluorescein. $C_{20}H_{10}Cl_2O_5$. (M_r 401.2). *1027200.* [76-54-0]. 2,7-Dichlorofluorescein. 2-(2,7-Dichloro-6-hydroxy-3-oxo-3*H*-xanthen-9-yl)benzoic acid.

Yellowish-brown or yellow-orange powder, slightly soluble in water, freely soluble in ethanol (96 per cent) and in dilute solutions of alkali hydroxides giving a solution showing a yellowish-green fluorescence.

2,6-Dichlorophenol. $C_6H_4Cl_2O$. (M_r 163.0). *1177600.* [87-65-0].

mp: 64 °C to 66 °C.

Dichlorophenolindophenol, sodium salt. $C_{12}H_6Cl_2NNaO_2,2H_2O$. ($M_r$ 326.1). *1027300.* [620-45-1]. The sodium derivative of 2,6-dichloro-*N*-(4-hydroxy-phenyl)-1,4-benzoquinone monoimine dihydrate.

Dark-green powder, freely soluble in water and in anhydrous ethanol. The aqueous solution is dark blue; when acidified it becomes pink.

Dichlorophenolindophenol standard solution. *1027301.*

Dissolve 50.0 mg of *dichlorophenolindophenol, sodium salt R* in 100.0 mL of *water R* and filter.

Assay. Dissolve 20.0 mg of *ascorbic acid R* in 10 mL of a freshly prepared 200 g/L solution of *metaphosphoric acid R* and dilute to 250.0 mL with *water R*. Titrate 5.0 mL rapidly with the dichloro-phenolindophenol standard solution, added from a microburette graduated in 0.01 mL, until the pink colour persists for 10 s, the titration occupying not more than 2 min. Dilute the dichlorophenolindophenol solution with *water R* to make 1 mL of the solution equivalent to 0.1 mg of ascorbic acid ($C_6H_8O_6$).

Storage: use within 3 days.

Standardise immediately before use.

5,7-Dichloroquinolin-8-ol. $C_9H_5Cl_2NO$. (M_r 214.1). *1157000.* [773-76-2]. 5,7-Dichlorooxine.

Yellow, crystalline powder, soluble in acetone, slightly soluble in ethanol (96 per cent).

mp: about 179 °C.

Content: minimum 95.0 per cent.

Dichloroquinonechlorimide. $C_6H_2Cl_3NO$. (M_r 210.4). *1027400.* [101-38-2]. 2,6-Dichloro-*N*-chloro-1,4-benzoquinone mono-imine.

Pale yellow or greenish-yellow crystalline powder, practically insoluble in water, soluble in ethanol (96 per cent) and in dilute alkaline solutions.

mp: about 66 °C.

Dichlorvos. $C_4H_7Cl_2O_4P$. (M_r 221). *1101200.* [62-73-7]. 2,2-Dichlorovinyl dimethyl phosphate.

Colourless or brownish-yellow liquid, soluble in water, miscible with most organic solvents.

n_D^{25}: about 1.452.

Dicyclohexyl. $C_{12}H_{22}$. (M_r 166.3). *1135300.* [92-51-3]. Bicyclohexyl.

d_{20}^{20}: about 0.864.

bp: about 227 °C.

mp: about 4 °C.

Dicyclohexylamine. $C_{12}H_{23}N$. (M_r 181.3). *1027500.* [101-83-7]. *N,N*-Dicyclohexylamine.

Colourless liquid, sparingly soluble in water, miscible with the usual organic solvents.

n_D^{20}: about 1.484.

bp: about 256 °C.

Freezing point (*2.2.18*): 0 °C to 1 °C.

Dicyclohexylurea. $C_{13}H_{24}N_2O$. (M_r 224.4). *1027600.* [2387-23-7]. 1,3-Dicyclohexylurea.

White or almost white, crystalline powder.

mp: about 232 °C.

Didocosahexaenoin. $C_{47}H_{68}O_5$. (M_r 713.0). *1142700.* [88315-12-2]. Diglyceride of docosahexaenoic acid (C22:6). Glycerol didocosahexaenoate. (*all-Z*)-Docosahexaenoic acid, diester with propane-1,2,3-triol.

Didodecyl 3,3′-thiodipropionate. $C_{30}H_{58}O_4S$. (M_r 514.8). *1027700.* [123-28-4].

White or almost white, crystalline powder, practically insoluble in water, freely soluble in acetone and in light petroleum, slightly soluble in ethanol (96 per cent).

mp: about 39 °C.

Dieldrin. $C_{12}H_8Cl_6O$. (M_r 380.9). *1126200.* [60-57-1].

bp: about 385 °C.

mp: about 176 °C.

A suitable certified reference solution (10 ng/µL in cyclohexane) may be used.

Diethanolamine. $C_4H_{11}NO_2$. (M_r 105.1). *1027800.* [111-42-2]. 2,2′-Iminobisethanol.

Viscous, clear, slightly yellow liquid or deliquescent crystals melting at about 28 °C, very soluble in water, in acetone and in methanol.

d_{20}^{20}: about 1.09.

pH (*2.2.3*): 10.0 to 11.5 for a 50 g/L solution.

Diethanolamine used in the test for alkaline phosphatase complies with the following additional test.

Ethanolamine. Gas chromatography (*2.2.28*).

Internal standard solution. Dissolve 1.00 g of *3-aminopropanol R* in *acetone R* and dilute to 10.0 mL with the same solvent.

Test solution (a). Dissolve 5.00 g of the substance to be examined in *acetone R* and dilute to 10.0 mL with the same solvent.

Test solution (b). Dissolve 5.00 g of the substance to be examined in *acetone R*, add 1.0 mL of the internal standard solution and dilute to 10.0 mL with the same solvent.

Reference solutions. Dissolve 0.50 g of *ethanolamine R* in *acetone R* and dilute to 10.0 mL with the same solvent. To 0.5 mL, 1.0 mL and 2.0 mL of this solution, add 1.0 mL of the internal standard solution and dilute to 10.0 mL with *acetone R*.

Column:

- *size*: *l* = 1 m, Ø = 4 mm;
- *stationary phase*: *diphenylphenylene oxide polymer R* (180-250 µm).

Carrier gas: *nitrogen for chromatography R*.

Flow rate: 40 mL/min.

Temperature:

	Time (min)	Temperature (°C)
Column	0 → 3	125
	3 → 17.6	125 → 300
Injection port		250
Detector		280

Detection: flame-ionisation.

Injection: 1.0 µL.

Limit:

- *ethanolamine*: maximum 1.0 per cent.

Diethoxytetrahydrofuran. $C_8H_{16}O_3$. (M_r 160.2). *1027900.* [3320-90-9]. 2,5-Diethoxytetrahydrofuran. A mixture of the *cis* and *trans* isomers.

Clear, colourless or slightly yellowish liquid, practically insoluble in water, soluble in ethanol (96 per cent) and in most other organic solvents.

d_{20}^{20}: about 0.98.

n_D^{20}: about 1.418.

Diethylamine. $C_4H_{11}N$. (M_r 73.1). *1028000.* [109-89-7].

Clear, colourless, flammable liquid, strongly alkaline, miscible with water and with ethanol (96 per cent).

d_{20}^{20}: about 0.71.

bp: about 55 °C.

Diethylamine R1. $C_4H_{11}N$. (M_r 73.1). *1028001.* [109-89-7]. *N*-Ethylethanamine.

Content: minimum 99.5 per cent.

Clear, colourless, flammable liquid, strongly alkaline, miscible with water and with ethanol (96 per cent).

d_{20}^{20}: about 0.71.

bp: about 55 °C.

Diethylaminoethyldextran. *1028200.*

Anion-exchange resin presented as the hydrochloride.

Powder forming gels with water.

***N,N*-Diethylaniline.** $C_{10}H_{15}N$. (M_r 149.2). *1028400.* [91-66-7].

d_{20}^{20}: about 0.938.

bp: about 217 °C.

mp: about − 38 °C.

Diethylene glycol. $C_4H_{10}O_3$. (M_r 106.1). *1028300.* [111-46-6]. 2,2′-Oxydiethanol.

Content: minimum 99.5 per cent *m/m*.

Clear, colourless liquid, hygroscopic, miscible with water, with acetone and with ethanol (96 per cent).

d_{20}^{20}: about 1.118.

n_D^{20}: about 1.447.

bp: 244 °C to 246 °C.

Storage: in an airtight container.

***N,N*-Diethylethane-1,2-diamine.** *1028500.* [100-36-7].

See *N,N-diethylethylenediamine R*.

***N,N*-Diethylethylenediamine.** $C_6H_{16}N_2$. (M_r 116.2). *1028500.* [100-36-7].

Content: minimum 98.0 per cent.

Slightly oily liquid, colourless or slightly yellow, strong odour of ammonia, irritant to the skin, eyes and mucous membranes.

d_{20}^{20}: 0.827.

bp: 145 °C to 147 °C.

Water (*2.5.12*): maximum 1.0 per cent, determined on 0.500 g.

Di(2-ethylhexyl) phthalate. $C_{24}H_{38}O_4$. (M_r 390.5). *1028100.* Di(2-ethylhexyl) benzene-1,2-dicarboxylate.

Colourless, oily liquid, practically insoluble in water, soluble in organic solvents.

d_{20}^{20}: about 0.98.

n_D^{20}: about 1.486.

Viscosity (*2.2.9*): about 80 mPa·s.

Diethylphenylenediamine sulfate. $C_{10}H_{18}N_2O_4S$. (M_r 262.3). *1028600.* [6283-63-2]. *N,N'*-Diethyl-*p*-phenylenediamine sulfate. *N,N'*-Diethylbenzene-1,4-diamine sulfate.

White or slightly yellow powder, soluble in water.

mp: about 185 °C, with decomposition.

Storage: protected from light.

Diethylphenylenediamine sulfate solution. *1028601.*

To 250 mL of *water R* add 2 mL of *sulfuric acid R* and 25 mL of *0.02 M sodium edetate.* Dissolve in this solution 1.1 g of *diethylphenylenediamine sulfate R* and dilute to 1000 mL with *water R*.

Do not use if the solution is not colourless.

Storage: protected from light and heat for 1 month.

Diflubenzuron. $C_{14}H_9ClF_2N_2O_2$. (M_r 310.7). *1180000.* [35367-38-5]. 1-(4-Chlorophenyl)-3-(2,6-difluorobenzoyl)urea.

Colourless or white or almost white crystals, practically insoluble in water, freely soluble in dimethyl sulfoxide, slightly soluble in acetone.

mp: 230 to 232 °C.

Digitonin. $C_{56}H_{92}O_{29}$. (M_r 1229). *1028700.* [11024-24-1]. 3β-[*O*-β-D-Glucopyranosyl-(1→3)-*O*-β-D-galactopyranosyl-(1→2)-*O*-[β-D-xylopyranosyl-(1→3)]-*O*-β-D-galactopyranosyl-(1→4)-*O*-β-D-galactopyranosyloxy]-(25*R*)-5α-spirostan-2α,15β-diol.

Crystals, practically insoluble in water, sparingly soluble in anhydrous ethanol, slightly soluble in ethanol (96 per cent).

Digitoxin. *1028800.* [71-63-6].

See *Digitoxin (0078).*

Dihydrocapsaicin. $C_{18}H_{29}NO_3$. (M_r 307.4). *1148100.* [19408-84-5]. *N*-[(4-Hydroxy-3-methoxyphenyl)methyl]-8-methylnonanamide.

White or almost white, crystalline powder, practically insoluble in cold water, freely soluble in anhydrous ethanol.

10,11-Dihydrocarbamazepine. $C_{15}H_{14}N_2O$. (M_r 238.3). *1028900.* [3564-73-6]. 10,11-Dihydro-5*H*-dibenzo[*b,f*]azepine-5-carboxamide.

mp: 205 °C to 210 °C.

Dihydrocarvone. $C_{10}H_{16}O$. (M_r 152.2). *1160900.* [7764-50-3]. *p*-Menth-8-en-2-one. 2-Methyl-5-(1-methylethenyl)cyclohexanone.

Dihydrocarvone used in gas chromatography complies with the following additional test.

Assay. Gas chromatography (*2.2.28*) as prescribed in the test for chromatographic profile in the monograph *Caraway oil (1817).*

Content calculated by the normalisation procedure:

- *major component (trans-dihydrocarvone)*: minimum 70 per cent;
- *sum of cis- and trans-dihydrocarvone*: minimum 98 per cent.

2,5-Dihydroxybenzoic acid. $C_7H_6O_4$. (M_r 154.1). *1148200.* [490-79-9]. Gentisic acid.

Light yellow crystals.

mp: about 200 °C.

5,7-Dihydroxy-4-methylcoumarin. $C_{10}H_8O_4$. (M_r 192.2). *1149400.* [2107-76-8]. 5,7-Dihydroxy-4-methyl-2*H*-1-benzopyran-2-one.

Light yellowish powder, practically insoluble in water, sparingly soluble in ethanol (96 per cent).

mp: 295 °C to 303 °C.

Dihydroxynaphthalene. *1029000.* [132-86-5].

See *1,3-dihydroxynaphthalene R.*

1,3-Dihydroxynaphthalene. $C_{10}H_8O_2$. (M_r 160.2). *1029000.* [132-86-5]. Naphthalene-1,3-diol.

Crystalline, generally brownish-violet powder, freely soluble in water and in ethanol (96 per cent).

mp: about 125 °C.

2,7-Dihydroxynaphthalene. $C_{10}H_8O_2$. (M_r 160.2). *1029100.* [582-17-2]. Naphthalene-2,7-diol.

Needles, soluble in water and in ethanol (96 per cent).

mp: about 190 °C.

2,7-Dihydroxynaphthalene solution. *1029101.*

Dissolve 10 mg of *2,7-dihydroxynaphthalene R* in 100 mL of *sulfuric acid R* and allow to stand until decolorised.

Storage: use within 2 days.

5,7-Diiodoquinolin-8-ol. $C_9H_5I_2NO$. (M_r 397.0). *1157100.* [83-73-8]. 5,7-Diiodooxine.

Yellowish-brown powder, sparingly soluble in acetone and in ethanol (96 per cent).

Content: minimum 95.0 per cent.

Di-isobutyl ketone. $C_9H_{18}O$. (M_r 142.2). *1029200.* [108-83-8].

Clear, colourless liquid, slightly soluble in water, miscible with most organic solvents.

n_D^{20}: about 1.414

bp: about 168 °C.

Di-isopropyl ether. $C_6H_{14}O$. (M_r 102.2). *1029300.* [108-20-3].

Clear, colourless liquid, very slightly soluble in water, miscible with ethanol (96 per cent).

d_{20}^{20}: 0.723 to 0.728.

bp: 67 °C to 69 °C.

Do not distil if the di-isopropyl ether does not comply with the test for peroxides.

Peroxides. Place 8 mL of *potassium iodide and starch solution R* in a 12 mL ground-glass-stoppered cylinder about 1.5 cm in diameter. Fill completely with the substance to be examined, shake vigorously and allow to stand protected from light for 30 min. No colour is produced.

The name and concentration of any added stabiliser are stated on the label.

Storage: protected from light.

***N,N'*-Diisopropylethylenediamine.** $C_8H_{20}N_2$. (M_r 144.3). *1140600.* [4013-94-9]. *N,N'*-Bis(1-methylethyl)-1,2-ethanediamine.

Colourless or yellowish, corrosive, flammable, hygroscopic liquid.

d_{20}^{20}: about 0.798.

n_D^{20}: about 1.429.

bp: about 170 °C.

4,4′-Dimethoxybenzophenone. $C_{15}H_{14}O_3$. (M_r 242.3). *1126300.* [90-96-0]. Bis(4-methoxyphenyl)methanone.

White or almost white powder, practically insoluble in water and slightly soluble in ethanol (96 per cent).

mp: about 142 °C.

Dimethoxypropane. $C_5H_{12}O_2$. (M_r 104.1). *1105200.* [77-76-9]. 2,2-Dimethoxypropane.

Colourless liquid, decomposing on exposure to moist air or water.

d_{20}^{20}: about 0.847.

n_D^{20}: about 1.378.

bp: about 83 °C.

Dimethylacetamide. C_4H_9NO. (M_r 87.1). *1029700.* [127-19-5]. *N,N*-Dimethylacetamide.

Content: minimum 99.5 per cent.

Colourless liquid, miscible with water and with many organic solvents.

d_{20}^{20}: about 0.94.

n_D^{20}: about 1.437.

bp: about 165 °C.

Dimethylamine. C_2H_7N. (M_r 45.08). *1168900.* [124-40-3]. *N*-Methylmethanamine.

Colourless, flammable gas.

bp: about 7 °C.

mp: about − 92.2 °C.

Dimethylamine solution. *1168901.*

A 400 g/L solution.

Clear, colourless solution.

Density: about 0.89.

bp: about 54 °C.

mp: about − 37 °C.

Dimethylaminobenzaldehyde. $C_9H_{11}NO$. (M_r 149.2). *1029800.* [100-10-7]. 4-Dimethylaminobenzaldehyde.

White or yellowish-white crystals, soluble in ethanol (96 per cent) and in dilute acids.

mp: about 74 °C.

Dimethylaminobenzaldehyde solution R1. *1029801.*

Dissolve 0.2 g of *dimethylaminobenzaldehyde R* in 20 mL of *ethanol (96 per cent) R* and add 0.5 mL of *hydrochloric acid R*. Shake the solution with *activated charcoal R* and filter. The colour of the reagent is less intense than that of *iodine solution R3*. Prepare immediately before use.

Dimethylaminobenzaldehyde solution R2. *1029802.*

Dissolve 0.2 g of *dimethylaminobenzaldehyde R*, without heating, in a mixture of 4.5 mL of *water R* and 5.5 mL of *hydrochloric acid R*. Prepare immediately before use.

Dimethylaminobenzaldehyde solution R6. *1029803.*

Dissolve 0.125 g of *dimethylaminobenzaldehyde R* in a cooled mixture of 35 mL of *water R* and 65 mL of *sulfuric acid R*. Add 0.1 mL of a 50 g/L solution of *ferric chloride R*. Before use allow to stand for 24 h, protected from light.

Storage: when stored at room temperature, use within 1 week; when stored in a refrigerator use within several months.

Dimethylaminobenzaldehyde solution R7. *1029804.*

Dissolve 1.0 g of *dimethylaminobenzaldehyde R* in 50 mL of *hydrochloric acid R* and add 50 mL of *ethanol (96 per cent) R*.

Storage: protected from light; use within 4 weeks.

Dimethylaminobenzaldehyde solution R8. *1029805.*

Dissolve 0.25 g of *dimethylaminobenzaldehyde R* in a mixture of 5 g of *phosphoric acid R*, 45 g of *water R* and 50 g of *anhydrous acetic acid R*. Prepare immediately before use.

4-Dimethylaminocinnamaldehyde. $C_{11}H_{13}NO$. (M_r 175.2). *1029900.* [6203-18-5]. 3-(4-Dimethylamino-phenyl)prop-2-enal.

Orange or orange-brown crystals or powder. Sensitive to light.

mp: about 138 °C.

4-Dimethylaminocinnamaldehyde solution. *1029901.*

Dissolve 2 g of *4-dimethylaminocinnamaldehyde R* in a mixture of 100 mL of *hydrochloric acid R1* and 100 mL of *anhydrous ethanol R*. Dilute the solution to four times its volume with *anhydrous ethanol R* immediately before use.

2-(Dimethylamino)ethyl methacrylate. $C_8H_{15}NO_2$. (M_r 157.2). *1147200.* [2867-47-2]. 2-(Dimethylamino)ethyl 2-methylpropenoate.

d_4^{20}: about 0.930.

bp: about 187 °C.

Dimethylaminonaphthalenesulfonyl chloride. $C_{12}H_{12}ClNO_2S$. (M_r 269.8). *1030000.* [605-65-2]. 5-Dimethyl-amino-1-naphthalenesulfonyl chloride.

Yellow, crystalline powder, slightly soluble in water, soluble in methanol.

mp: about 70 °C.

3-Dimethylaminophenol. $C_8H_{11}NO$. (M_r 137.2). *1156500.* [99-07-0]. 3-(Dimethylamino)phenol.

Grey powder, slightly soluble in water.

mp: about 80 °C.

2-(Dimethylamino)thioacetamide hydrochloride. $C_4H_{11}ClN_2S$. (M_r 154.7). *1181800.* [27366-72-9].

Dimethylaniline. *1030100.* [121-69-7].

See *N,N-Dimethylaniline R*.

***N,N*-Dimethylaniline.** $C_8H_{11}N$. (M_r 121.2). *1030100.* [121-69-7].

Clear, oily liquid, almost colourless when freshly distilled, darkening on storage to reddish-brown, practically insoluble in water, freely soluble in ethanol (96 per cent).

n_D^{20}: about 1.558.

Distillation range (*2.2.11*). Not less than 95 per cent distils between 192 °C and 194 °C.

2,3-Dimethylaniline. $C_8H_{11}N$. (M_r 121.2). *1105300.* [87-59-2]. 2,3-Xylidine.

Yellowish liquid, sparingly soluble in water, soluble in ethanol (96 per cent).

d_{20}^{20}: 0.993 to 0.995.

n_D^{20}: about 1.569.

bp: about 224 °C.

2,6-Dimethylaniline. $C_8H_{11}N$. (M_r 121.2). *1030200.* [87-62-7]. 2,6-Xylidine.

Colourless liquid, sparingly soluble in water, soluble in ethanol (96 per cent).

d_{20}^{20}: about 0.98.

2,6-Dimethylaniline hydrochloride. $C_8H_{12}ClN$. (M_r 157.6). *1169000.* [21436-98-6]. 2,6-Dimethylbenzenamide hydrochloride. 2,6-Xylidine hydrochloride.

Content: minimum 98.0 per cent.

2,4-Dimethyl-6-*tert*-butylphenol. $C_{12}H_{18}O$. (M_r 178.3). *1126500.* [1879-09-0].

Dimethyl carbonate. $C_3H_6O_3$. (M_r 90.1). *1119300.* [616-38-6]. Carbonic acid dimethyl ester.

Liquid, insoluble in water, miscible with ethanol (96 per cent).

d_4^{17}: 1.065.

n_D^{20}: 1.368.

bp: about 90 °C.

Dimethyl-β-cyclodextrin. $C_{56}H_{98}O_{35}$. (M_r 1331). *1169100.* [51166-71-3]. Heptakis(2,6-di-*O*-methyl)cyclomaltoheptaose. Cycloheptakis-(1→4)-(2,6-di-*O*-methyl-α-D-glucopyranosyl). $2^A,2^B,2^C,2^D,2^E,2^F,2^G,6^A,6^B,6^C,6^D,6^E,6^F,6^G$-Tetradeca-*O*-methyl-β-cyclodextrin.

White or almost white powder.

Dimethyldecylamine. $C_{12}H_{27}N$. (M_r 185.4). *1113500.* [1120-24-7]. *N,N*-dimethyldecylamine.

Content: minimum 98.0 per cent *m/m*.

bp: about 234 °C.

1,1-Dimethylethylamine. $C_4H_{11}N$. (M_r 73.1). *1100900.* [75-64-9]. 2-Amino-2-methylpropane. *tert*-Butylamine.

Liquid, miscible with ethanol (96 per cent).

d_{20}^{20}: about 0.694.

n_D^{20}: about 1.378.

bp: about 46 °C.

1,1-Dimethylethyl methyl ether. $C_5H_{12}O$. (M_r 88.1). *1013900.* [1634-04-4]. 2-Methoxy-2-methylpropane. *tert*-Butyl methyl ether.

Colourless, clear, flammable liquid.

n_D^{20}: about 1.376.

Minimum transmittance (*2.2.25*) using *water R* as compensation liquid: 50 per cent at 240 nm, 80 per cent at 255 nm, 98 per cent at 280 nm.

1,1-Dimethylethyl methyl ether R1. $C_5H_{12}O$. (M_r 88.1). *1126400.* [1634-04-4]. 2-Methoxy-2-methylpropane. *tert*-Butyl methyl ether.

Content: minimum 99.5 per cent.

d_{20}^{20}: about 0.741.

n_D^{20}: about 1.369.

bp: about 55 °C.

Dimethylformamide. C_3H_7NO. (M_r 73.1). *1030300.* [68-12-2].

Clear, colourless neutral liquid, miscible with water and with ethanol (96 per cent).

d_{20}^{20}: 0.949 to 0.952.

bp: about 153 °C.

Water (*2.5.12*): maximum 0.1 per cent.

Dimethylformamide diethylacetal. $C_7H_{17}NO_2$. (M_r 147.2). *1113600.* [1188-33-6]. *N,N*-Dimethylformamide diethylacetal.

n_D^{20}: about 1.40.

bp: 128 °C to 130 °C.

***N,N*-Dimethylformamide dimethylacetal.** $C_5H_{13}NO_2$. (M_r 119.2). *1140700.* [4637-24-5]. 1,1-Dimethoxytrimethylamine.

Clear, colourless liquid.

d_{20}^{20}: about 0.896.

n_D^{20}: about 1.396.

bp: about 103 °C.

Dimethylglyoxime. $C_4H_8N_2O_2$. (M_r 116.1). *1030400.* [95-45-4]. 2,3-Butanedione dioxime.

White or almost white, crystalline powder or colourless crystals, practically insoluble in cold water, very slightly soluble in boiling water, soluble in ethanol (96 per cent).

mp: about 240 °C, with decomposition.

Sulfated ash (*2.4.14*): maximum 0.05 per cent.

1,3-Dimethyl-2-imidazolidinone. $C_5H_{10}N_2O$. (M_r 114.2). *1135400.* [80-73-9]. *N,N′*-Dimethylethylene urea. 1,3-Dimethyl-2-imidazolidone.

n_D^{20}: 1.4720.

bp: about 224 °C.

***N,N*-Dimethyloctylamine.** $C_{10}H_{23}N$. (M_r 157.3). *1030500.* [7378-99-6]. Octyldimethylamine.

Colourless liquid.

d_{20}^{20}: about 0.765.

n_D^{20}: about 1.424.

bp: about 195 °C.

2,5-Dimethylphenol. $C_8H_{10}O$. (M_r 122.2). *1162300.* [95-87-4]. *p*-Xylenol.

White or almost white crystals.

2,6-Dimethylphenol. $C_8H_{10}O$. (M_r 122.2). *1030600.* [576-26-1].

Colourless needles, slightly soluble in water, very soluble in ethanol (96 per cent).

bp: about 203 °C.

mp: 46 °C to 48 °C.

3,4-Dimethylphenol. $C_8H_{10}O$. (M_r 122.2). *1098100.* [95-65-8].

White or almost white crystals, slightly soluble in water, freely soluble in ethanol (96 per cent).

bp: about 226 °C.

mp: 25 °C to 27 °C.

***N,N*-Dimethyl-L-phenylalanine.** $C_{11}H_{15}NO_2$. (M_r 193.2). *1164000.* [17469-89-5]. (2*S*)-2-(Dimethylamino)-3-phenylpropanoic acid.

mp: about 226 °C.

Dimethylpiperazine. $C_6H_{14}N_2$. (M_r 114.2). *1030700.* [106-58-1]. 1,4-Dimethylpiperazine.

A colourless liquid, miscible with water and with ethanol (96 per cent).

d_{20}^{20}: about 0.85.

n_D^{20}: about 1.446.

bp: about 131 °C.

Dimethylstearamide. $C_{20}H_{41}NO$. (M_r 311.6). *1030800.* *N,N*-Dimethylstearamide.

White or almost white solid mass, soluble in many organic solvents, including acetone.

mp: about 51 °C.

Dimethylstearylamide. *1030800.*

See *dimethylstearamide R*.

Dimethyl sulfone. $C_2H_6O_2S$. (M_r 94.1). *1030900.* [67-71-0].

White or almost white, crystalline powder, freely soluble in water, soluble in acetone and ethanol (96 per cent).

mp: 108 °C to 110 °C.

Dimethyl sulfoxide. *1029500.* [67-68-5].

See *Dimethyl sulfoxide (0763)*.

Dimethyl sulfoxide used in spectrophotometry complies with the following additional test.

Minimum transmittance (*2.2.25*) using *water R* as compensation liquid: 10 per cent at 262 nm, 35 per cent at 270 nm, 70 per cent at 290 nm, 98 per cent at 340 nm and at higher wavelengths.

Dimethyl sulfoxide R1. *1029501.*

Content: minimum 99.7 per cent, determined by gas chromatography.

Dimeticone. *1105400.* [9006-65-9].

See *Dimeticone (0138).*

Dimidium bromide. $C_{20}H_{18}BrN_3$. (M_r 380.3). *1031100.* [518-67-2]. 3,8-Diamino-5-methyl-6-phenylphenanthridinium bromide.

Dark-red crystals, slightly soluble in water at 20 °C, sparingly soluble in water at 60 °C and in ethanol (96 per cent).

Dimidium bromide-sulfan blue mixed solution. *1031101.*

Dissolve separately 0.5 g of *dimidium bromide R* and 0.25 g of *sulfan blue R* in 30 mL of a hot mixture of 1 volume of *anhydrous ethanol R* and 9 volumes of *water R*, stir, mix the two solutions, and dilute to 250 mL with the same mixture of solvents. Mix 20 mL of this solution with 20 mL of a 14.0 per cent *V/V* solution of *sulfuric acid R* previously diluted with about 250 mL of *water R* and dilute to 500 mL with *water R*.

Storage: protected from light.

Dinitrobenzene. $C_6H_4N_2O_4$. (M_r 168.1). *1031200.* [99-65-0]. 1,3-Dinitrobenzene.

Yellowish crystalline powder or crystals, practically insoluble in water, slightly soluble in ethanol (96 per cent).

mp: about 90 °C.

Dinitrobenzene solution. *1031201.*

A 10 g/L solution in *ethanol (96 per cent) R*.

Dinitrobenzoic acid. $C_7H_4N_2O_6$. (M_r 212.1). *1031300.* [99-34-3]. 3,5-Dinitrobenzoic acid.

Almost colourless crystals, slightly soluble in water, very soluble in ethanol (96 per cent).

mp: about 206 °C.

Dinitrobenzoic acid solution. *1031301.*

A 20 g/L solution in *ethanol (96 per cent) R*.

Dinitrobenzoyl chloride. $C_7H_3ClN_2O_5$. (M_r 230.6). *1031400.* [99-33-2]. 3,5-Dinitrobenzoyl chloride.

Translucent, yellow or greenish-yellow powder or yellowish crystals, soluble in acetone and in toluene.

mp: about 68 °C.

Suitability test. To 1 mL of *anhydrous ethanol R* and 0.1 g of *dinitrobenzoyl chloride R* add 0.05 mL of *dilute sulfuric acid R* and boil under a reflux condenser for 30 min. After evaporation on a water-bath add 5 mL of *heptane R* to the residue and heat to boiling. Filter the hot solution. Wash the crystals formed on cooling to room temperature with a small quantity of *heptane R* and dry in a desiccator. The crystals melt (*2.2.14*) at 94 °C to 95 °C.

Dinitrophenylhydrazine. $C_6H_6N_4O_4$. (M_r 198.1). *1031500.* [119-26-6]. 2,4-Dinitrophenylhydrazine.

Reddish-orange crystals, very slightly soluble in water, slightly soluble in ethanol (96 per cent).

mp: about 203 °C (instantaneous method).

Dinitrophenylhydrazine-aceto-hydrochloric solution. *1031501.*

Dissolve 0.2 g of *dinitrophenylhydrazine R* in 20 mL of *methanol R* and add 80 mL of a mixture of equal volumes of *acetic acid R* and *hydrochloric acid R1*. Prepare immediately before use.

Dinitrophenylhydrazine-hydrochloric solution. *1031502.*

Dissolve by heating 0.50 g of *dinitrophenylhydrazine R* in *dilute hydrochloric acid R* and dilute to 100 mL with the same solvent. Allow to cool and filter. Prepare immediately before use.

Dinitrophenylhydrazine-sulfuric acid solution. *1031503.*

Dissolve 1.5 g of *dinitrophenylhydrazine R* in 50 mL of a 20 per cent *V/V* solution of *sulfuric acid R*. Prepare immediately before use.

Dinonyl phthalate. $C_{26}H_{42}O_4$. (M_r 418.6). *1031600.* [28553-12-0].

Colourless to pale yellow, viscous liquid.

d_{20}^{20}: 0.97 to 0.98.

n_D^{20}: 1.482 to 1.489.

Acidity. Shake 5.0 g with 25 mL of *water R* for 1 min. Allow to stand, filter the separated aqueous layer and add 0.1 mL of *phenolphthalein solution R*. Not more than 0.3 mL of *0.1 M sodium hydroxide* is required to change the colour of the solution (0.05 per cent, calculated as phthalic acid).

Water (*2.5.12*): maximum 0.1 per cent.

Dioctadecyl disulfide. $C_{36}H_{74}S_2$. (M_r 571.1). *1031700.* [2500-88-1].

White or almost white powder, practically insoluble in water.

mp: 53 °C to 58 °C.

2,2′-Di(octadecyloxy)-5,5′-spirobi(1,3,2-dioxaphosphorinane). $C_{41}H_{82}O_6P_2$. (M_r 733). *1031800.*

White or almost white, waxy solid, practically insoluble in water, soluble in hydrocarbons.

mp: 40 °C to 70 °C.

Dioctadecyl 3,3′-thiodipropionate. $C_{42}H_{82}O_4S$. (M_r 683). *1031900.* [693-36-7].

White or almost white, crystalline powder, practically insoluble in water, freely soluble in methylene chloride, sparingly soluble in acetone, in ethanol (96 per cent) and in light petroleum.

mp: 58 °C to 67 °C.

Dioxan. $C_4H_8O_2$. (M_r 88.1). *1032000.* [123-91-1]. 1,4-Dioxan.

Clear, colourless liquid, miscible with water and with most organic solvents.

d_{20}^{20}: about 1.03.

Freezing-point (*2.2.18*): 9 °C to 11 °C.

Water (*2.5.12*): maximum 0.5 per cent.

Do not distil if the dioxan does not comply with the test for peroxides.

Peroxides. Place 8 mL of *potassium iodide and starch solution R* in a 12 mL ground-glass-stoppered cylinder about 1.5 cm in diameter. Fill completely with the substance to be examined, shake vigorously and allow to stand in the dark for 30 min. No colour is produced.

Dioxan used for liquid scintillation is of a suitable analytical grade.

Dioxan solution. *1032002.*

Dilute 50.0 mL of *dioxan stock solution R* to 100.0 mL with *water R*. (0.5 mg/mL of dioxan).

Dioxan solution R1. *1032003.*

Dilute 10.0 mL of *dioxan solution R* to 50.0 mL with *water R*. (0.1 mg/mL of dioxan).

Dioxan stock solution. *1032001.*

Dissolve 1.00 g of *dioxan R* in *water R* and dilute to 100.0 mL with the same solvent. Dilute 5.0 mL of this solution to 50.0 mL with *water R* (1.0 mg/mL).

Diphenylamine. $C_{12}H_{11}N$. (M_r 169.2). *1032100.* [122-39-4]. White or almost white crystals, slightly soluble in water, soluble in ethanol (96 per cent).

mp: about 55 °C.

Storage: protected from light.

Diphenylamine solution. *1032101.*

A 1 g/L solution in *sulfuric acid R*.

Storage: protected from light.

Diphenylamine solution R1. *1032102.*

A 10 g/L solution in *sulfuric acid R*. The solution is colourless.

Diphenylamine solution R2. *1032103.*

Dissolve 1 g of *diphenylamine R* in 100 mL of *glacial acetic acid R* and add 2.75 mL of *sulfuric acid R*. Use immediately.

Diphenylanthracene. $C_{26}H_{18}$. (M_r 330.4). *1032200.* [1499-10-1]. 9,10-Diphenylanthracene.

Yellowish or yellow, crystalline powder, practically insoluble in water.

mp: about 248 °C.

Diphenylbenzidine. $C_{24}H_{20}N_2$. (M_r 336.4). *1032300.* [531-91-9]. *N,N'*-Diphenylbenzidine. *N,N'*-Diphenylbiphenyl-4,4′-diamine.

White or faintly grey, crystalline powder, practically insoluble in water, slightly soluble in acetone and in ethanol (96 per cent).

mp: about 248 °C.

Nitrates. Dissolve 8 mg in a cooled mixture of 5 mL of *water R* and 45 mL of *nitrogen-free sulfuric acid R*. The solution is colourless or very pale blue.

Sulfated ash (*2.4.14*): maximum 0.1 per cent.

Storage: protected from light.

Diphenylboric acid aminoethyl ester. $C_{14}H_{16}BNO$. (M_r 225.1). *1032400.* [524-95-8].

White or slightly yellow, crystalline powder, practically insoluble in water, soluble in ethanol (96 per cent).

mp: about 193 °C.

Diphenylcarbazide. $C_{13}H_{14}N_4O$. (M_r 242.3). *1032500.* [140-22-7]. 1,5-Diphenylcarbonodihydrazide.

White or almost white, crystalline powder which gradually becomes pink on exposure to air, very slightly soluble in water, soluble in acetone, in ethanol (96 per cent) and in glacial acetic acid.

mp: about 170 °C.

Sulfated ash (*2.4.14*): maximum 0.1 per cent.

Storage: protected from light.

Diphenylcarbazide solution. *1032501.*

Dissolve 0.2 g of *diphenylcarbazide R* in 10 mL of *glacial acetic acid R* and dilute to 100 mL with *anhydrous ethanol R*. Prepare immediately before use.

Diphenylcarbazone. $C_{13}H_{12}N_4O$. (M_r 240.3). *1032600.* [538-62-5]. 1,5-Diphenylcarbazone.

Orange-yellow, crystalline powder, practically insoluble in water, freely soluble in ethanol (96 per cent).

mp: about 157 °C, with decomposition.

Diphenylcarbazone mercuric reagent. *1032601.*

Solution A. Dissolve 0.1 g of *diphenylcarbazone R* in *anhydrous ethanol R* and dilute to 50 mL with the same solvent.

Solution B. Dissolve 1 g of *mercuric chloride R* in *anhydrous ethanol R* and dilute to 50 mL with the same solvent.

Mix equal volumes of the two solutions.

2,2-Diphenylglycine. $C_{14}H_{13}NO_2$. (M_r 227.26). *1174300.* [3060-50-2]. Amino(diphenyl)acetic acid.

1,2-Diphenylhydrazine. $C_{12}H_{12}N_2$. (M_r 184.3). *1140800.* [122-66-7]. Hydrazobenzene. 1,2-Diphenyldiazane.

Orange powder.

mp: about 125 °C.

Diphenylmethanol. $C_{13}H_{12}O$. (M_r 184.2). *1145700.* [91-01-0]. Benzhydrol.

White or almost white, crystalline powder.

mp: about 66 °C.

Diphenyloxazole. $C_{15}H_{11}NO$. (M_r 221.3). *1032700.* [92-71-7]. 2,5-Diphenyloxazole.

White or almost white powder, practically insoluble in water, soluble in methanol, sparingly soluble in dioxan and in glacial acetic acid.

mp: about 70 °C.

$A_{1\,cm}^{1\%}$: about 1260 determined at 305 nm in *methanol R*.

Diphenyloxazole used for liquid scintillation is of a suitable analytical grade.

Diphenylphenylene oxide polymer. *1032800.* 2,6-Diphenyl-*p*-phenylene oxide polymer.

White or almost white, porous beads. The size range of the beads is specified after the name of the reagent in the tests where it is used.

Diphosphorus pentoxide. P_2O_5. (M_r 141.9). *1032900.* [1314-56-3]. Phosphorus pentoxide. Phosphoric anhydride.

White or almost white powder, amorphous, deliquescent. It is hydrated by water with the evolution of heat.

Storage: in an airtight container.

Dipotassium hydrogen phosphate. K_2HPO_4. (M_r 174.2). *1033000.* [7758-11-4].

White or almost white, crystalline powder, hygroscopic, very soluble in water, slightly soluble in ethanol (96 per cent).

Storage: in an airtight container.

Dipotassium hydrogen phosphate trihydrate. $K_2HPO_4,3H_2O$. (M_r 228.2). *1157600.* [16788-57-1].

Colourless or white or almost white powder or crystals, freely soluble in water.

Dipotassium sulfate. K_2SO_4. (M_r 174.3). *1033100.* [7778-80-5].

Colourless crystals, soluble in water.

2,2′-Dipyridylamine. $C_{10}H_9N_3$. (M_r 171.2). *1157700.* [1202-34-2]. *N*-(Pyridin-2-yl)pyridin-2-amine.

mp: about 95 °C.

Disodium arsenate. $Na_2HAsO_4,7H_2O$. (M_r 312.0). *1102500.* [10048-95-0]. Disodium hydrogen arsenate heptahydrate. Dibasic sodium arsenate.

Crystals, efflorescent in warm air, freely soluble in water, soluble in glycerol, slightly soluble in ethanol (96 per cent). The aqueous solution is alcaline to litmus.

d_{20}^{20}: about 1.87.

mp: about 57 °C when rapidly heated.

Disodium bicinchoninate. $C_{20}H_{10}N_2Na_2O_4$. (M_r 388.3). *1126600.* [979-88-4]. Disodium 2,2′-biquinoline-4-4′-dicarboxylate.

Disodium hydrogen citrate. $C_6H_6Na_2O_7,1^1/_2H_2O$. (M_r 263.1). *1033200.* [144-33-2]. Sodium acid citrate. Disodium hydrogen 2-hydroxypropane-1,2,3-tricarboxylate sesquihydrate.

White or almost white powder, soluble in less than 2 parts of water, practically insoluble in ethanol (96 per cent).

Disodium hydrogen phosphate. *1033300.* [10039-32-4].
See *Disodium phosphate dodecahydrate (0118).*

Disodium hydrogen phosphate solution. *1033301.*
A 90 g/L solution.

Disodium hydrogen phosphate, anhydrous. Na_2HPO_4. (M_r 142.0). *1033400.* [7558-79-4].

Disodium hydrogen phosphate dihydrate. *1033500.* [10028-24-7].
See *Disodium phosphate dihydrate (0602).*

Disodium tetraborate. *1033600.* [1303-96-4].
See *Borax (0013).*

Borate solution. *1033601.*
Dissolve 9.55 g of *disodium tetraborate R* in *sulfuric acid R*, heating on a water-bath, and dilute to 1 L with the same acid.

Ditalimphos. $C_{12}H_{14}NO_4PS$. (M_r 299.3). *1126700.* [5131-24-8]. *O,O*-Diethyl (1,3-dihydro-1,3-dioxo-2*H*-isoindol-2-yl)phosphonothioate.
Very slightly soluble in water, in ethyl acetate and in anhydrous ethanol.
A suitable certified reference solution may be used.

5,5′-Dithiobis(2-nitrobenzoic acid). $C_{14}H_8N_2O_8S_2$. (M_r 396.4). *1097300.* [69-78-3]. 3-Carboxy-4-nitrophenyldisulfide. Ellman's reagent. DTNB.
Yellow powder sparingly soluble in ethanol (96 per cent).
mp: about 242 °C.

Dithiol. $C_7H_8S_2$. (M_r 156.3). *1033800.* [496-74-2]. Toluene-3,4-dithiol. 4-Methylbenzene-1,2-dithiol.
White or almost white crystals, hygroscopic, soluble in methanol and in solutions of alkali hydroxides.
mp: about 30 °C.
Storage: in an airtight container.

Dithiol reagent. *1033801.*
To 1 g of *dithiol R* add 2 mL of *thioglycollic acid R* and dilute to 250 mL with a 20 g/L solution of *sodium hydroxide R*. Prepare immediately before use.

Dithiothreitol. $C_4H_{10}O_2S_2$. (M_r 154.2). *1098200.* [27565-41-9]. *threo*-1,4-Dimercaptobutane-2,3-diol.
Slightly hygroscopic needles, freely soluble in water, in acetone and in anhydrous ethanol.
Storage: in an airtight container.

Dithizone. $C_{13}H_{12}N_4S$. (M_r 256.3). *1033900.* [60-10-6]. 1,5-Diphenylthiocarbazone.
A bluish-black, brownish-black or black powder, practically insoluble in water, soluble in ethanol (96 per cent).
Storage: protected from light.

Dithizone solution. *1033901.*
A 0.5 g/L solution in *chloroform R*. Prepare immediately before use.

Dithizone solution R2. *1033903.*
Dissolve 40.0 mg of *dithizone R* in *chloroform R* and dilute to 1000.0 mL with the same solvent. Dilute 30.0 mL of the solution to 100.0 mL with *chloroform R*.
Assay. Dissolve a quantity of *mercuric chloride R* equivalent to 0.1354 g of $HgCl_2$ in a mixture of equal volumes of *dilute sulfuric acid R* and *water R* and dilute to 100.0 mL with the same mixture of solvents. Dilute 2.0 mL of this solution to 100.0 mL with a mixture of equal volumes of *dilute sulfuric acid R* and *water R*. (This solution contains 20 ppm of Hg). Transfer 1.0 mL of the solution to a separating funnel and add 50 mL of *dilute sulfuric acid R*, 140 mL of *water R* and 10 mL of a 200 g/L solution of *hydroxylamine hydrochloride R*. Titrate with the dithizone solution; after each addition, shake the mixture twenty times and towards the end of the titration allow to separate and discard the chloroform layer. Titrate until a bluish-green colour is obtained. Calculate the equivalent in micrograms of mercury per millilitre of the dithizone solution from the expression 20/*V*, where *V* is the volume in millilitres of the dithizone solution used in the titration.

Dithizone R1. $C_{13}H_{12}N_4S$. (M_r 256.3). *1105500.* [60-10-6]. 1,5-Diphenylthiocarbazone.
Content: minimum 98.0 per cent.
Bluish-black, brownish-black or black powder, practically insoluble in water, soluble in ethanol (96 per cent).
Storage: protected from light.

Divanadium pentoxide. V_2O_5. (M_r 181.9). *1034000.* [1314-62-1]. Vanadic anhydride.
Content: minimum 98.5 per cent.
Yellow-brown or rust-brown powder, slightly soluble in water, soluble in strong mineral acids and in solutions of alkali hydroxides with formation of salts.
Appearance of solution. Heat 1 g for 30 min with 10 mL of *sulfuric acid R*. Allow to cool and dilute to 10 mL with the same acid. The solution is clear (*2.2.1*).
Sensitivity to hydrogen peroxide. Dilute 1.0 mL of the solution prepared for the test for appearance of solution cautiously to 50.0 mL with *water R*. To 0.5 mL of the solution add 0.1 mL of a solution of *hydrogen peroxide R* (0.1 g/L of H_2O_2). The solution has a distinct orange colour compared with a blank prepared from 0.5 mL of the solution to be examined and 0.1 mL of *water R*. After the addition of 0.4 mL of hydrogen peroxide solution (0.1 g/L H_2O_2), the orange solution becomes orange-yellow.
Loss on ignition: maximum 1.0 per cent, determined on 1.00 g at 700 ± 50 °C.
Assay. Dissolve 0.200 g with heating in 20 mL of a 70 per cent *m/m* solution of *sulfuric acid R*. Add 100 mL of *water R* and *0.02 M potassium permanganate* until a reddish colour is obtained. Decolorise the excess of potassium permanganate by the addition of a 30 g/L solution of *sodium nitrite R*. Add 5 g of *urea R* and 80 mL of a 70 per cent *m/m* solution of *sulfuric acid R*. Cool. Using 0.1 mL of *ferroin R* as indicator, titrate the solution immediately with *0.1 M ferrous sulfate* until a greenish-red colour is obtained.
1 mL of *0.1 M ferrous sulfate* is equivalent to 9.095 mg of V_2O_5.

Divanadium pentoxide solution in sulfuric acid. *1034001.*
Dissolve 0.2 g of *divanadium pentoxide R* in 4 mL of *sulfuric acid R* and dilute to 100 mL with *water R*.

Docosahexaenoic acid methyl ester. $C_{23}H_{34}O_2$. (M_r 342.5). *1142800.* [301-01-9]. DHA methyl ester. Cervonic acid methyl ester. (all-*Z*)-Docosa-4,7,10,13,16,19-hexaenoic acid methyl ester.
Content: minimum 90.0 per cent, determined by gas chromatography.

Docusate sodium. *1034100.* [577-11-7].
See *Docusate sodium (1418).*

Dodecyltrimethylammonium bromide. $C_{15}H_{34}BrN$. (M_r 308.4). *1135500.* [1119-94-4]. *N,N,N*-Trimethyldodecan-1-aminium bromide.
White or almost white crystals.
mp: about 246 °C.

D-Dopa. $C_9H_{11}NO_4$. (M_r 197.2). *1164100.* [5796-17-8]. (2*R*)-2-Amino-3-(3,4-dihydroxyphenyl)propanoic acid. 3-Hydroxy-D-tyrosine. 3,4-Dihydroxy-D-phenylalanine.

$[\alpha]_D^{20}$: + 9.5 to + 11.5, determined on a 10 g/L solution in *1 M hydrochloric acid*.

mp: about 277 °C.

Dotriacontane. $C_{32}H_{66}$. (M_r 450.9). *1034200.* [544-85-4]. *n*-Dotriacontane.

White or almost white plates, practically insoluble in water, sparingly soluble in hexane.

mp: about 69 °C.

Impurities. Not more than 0.1 per cent of impurities with the same t_R value as α-tocopherol acetate, determined by the gas chromatographic method prescribed in the monograph *α-Tocopherol acetate (0439)*.

Doxycycline. *1145800.*

See *Doxycycline monohydrate (0820)*.

Echinacoside. $C_{35}H_{46}O_{20}$. (M_r 786.5). *1159400.* [82854-37-3]. β-(3′,4′-Dihydroxyphenyl)-ethyl-*O*-α-L-rhamnopyranosyl (1→3)-*O*-β-D-[β-D-glucopyranosyl(1→6)]-(4-*O*-caffeoyl)-glucopyranoside.

Pale yellow powder, odourless.

Edotreotide. $C_{65}H_{92}N_{14}O_{18}S_2$. ($M_r$ 1422). *1182400.* [204318-14-9]. *N*-[[4,7,10-Tris(carboxymethyl)-1,4,7,10-tetraazacyclododecan-1-yl]acetyl]-D-phenylalanyl-L-cysteinyl-L-tyrosyl-D-tryptophyl-L-lysyl-L-threonyl-*N*-[(1*R*,2*R*)-2-hydroxy-1-(hydroxymethyl)propyl]-L-cysteinamide cyclic (2→7)-disulfide. DOTATOC. DOTA-[Tyr^3]-octreotide.

White or almost white powder.

Content: minimum 95.0 per cent.

Electrolyte reagent for the micro determination of water. *1113700.*

Commercially available anhydrous reagent or a combination of anhydrous reagents for the coulometric titration of water, containing suitable organic bases, sulfur dioxide and iodide dissolved in a suitable solvent.

Elementary standard solution for atomic spectrometry (1.000 g/L). *5004000.*

This solution is prepared, generally in acid conditions, from the element or a salt of the element whose minimum content is not less than 99.0 per cent. The quantity per litre of solution is greater than 0.995 g throughout the guaranteed period, as long as the vial has not been opened. The starting material (element or salt) and the characteristics of the final solvent (nature and acidity, etc.) are mentioned on the label.

Emetine dihydrochloride. *1034300.* [316-42-7].

See *Emetine hydrochloride pentahydrate (0081)*.

Emodin. $C_{15}H_{10}O_5$. (M_r 270.2). *1034400.* [518-82-1]. 1,3,8-Trihydroxy-6-methylanthraquinone.

Orange-red needles, practically insoluble in water, soluble in ethanol (96 per cent) and in solutions of alkali hydroxides.

Chromatography. Thin-layer chromatography (*2.2.27*) as prescribed in the monograph *Rhubarb (0291)*; the chromatogram shows only one principal spot.

Endoprotease LysC. *1173200.*

Microbial extracellular proteolytic enzyme secreted by *Achromobacter lyticus*. A lyophilised powder, free of salts.

α-Endosulfan. $C_9H_6Cl_6O_3S$. (M_r 406.9). *1126800.* [959-98-8].

bp: about 200 °C.

mp: about 108 °C.

A suitable certified reference solution (10 ng/µL in cyclohexane) may be used.

β-Endosulfan. $C_9H_6Cl_6O_3S$. (M_r 406.9). *1126900.* [33213-65-9].

bp: about 390 °C.

mp: about 207 °C.

A suitable certified reference solution (10 ng/µL in cyclohexane) may be used.

Endrin. $C_{12}H_8Cl_6O$. (M_r 380.9). *1127000.* [72-20-8].

A suitable certified reference solution (10 ng/µL in cyclohexane) may be used.

Erucamide. $C_{22}H_{43}NO$. (M_r 337.6). *1034500.* [112-84-5]. (*Z*)-Docos-13-enoamide.

Yellowish or white powder or granules, practically insoluble in water, very soluble in methylene chloride, soluble in anhydrous ethanol.

mp: about 70 °C.

Erythritol. *1113800.* [149-32-6].

See *Erythritol (1803)*.

Esculetin. $C_9H_6O_4$. (M_r 178.1). *1185800.* [305-01-1]. 6,7-Dihydroxy-2*H*-1-benzopyran-2-one. Aesculetin.

Esculin. $C_{15}H_{16}O_9,1^1/_2H_2O$. ($M_r$ 367.3). *1119400.* [531-75-9]. 6-(β-D-Glucopyranosyloxy)-7-hydroxy-2*H*-chromen-2-one.

White or almost white powder or colourless crystals, sparingly soluble in water and in ethanol (96 per cent), freely soluble in hot water and in hot ethanol (96 per cent).

Chromatography (*2.2.27*). Thin-layer chromatography (*2.2.27*) as prescribed in the monograph *Eleutherococcus (1419)*; the chromatogram shows only one principal spot.

Estradiol. $C_{18}H_{24}O_2$. (M_r 272.4). *1135600.* [50-28-2]. Estra-1,3,5(10)-triene-3,17β-diol. β-Estradiol.

Prisms stable in air, practically insoluble in water, freely soluble in ethanol (96 per cent), soluble in acetone and in dioxane, sparingly soluble in vegetable oils.

mp: 173 °C to 179 °C.

17α-Estradiol. $C_{18}H_{24}O_2$. (M_r 272.4). *1034600.* [57-91-0].

White or almost white, crystalline powder or colourless crystals.

mp: 220 °C to 223 °C.

Estragole. $C_{10}H_{12}O$. (M_r 148.2). *1034700.* [140-67-0]. 1-Methoxy-4-prop-2-enylbenzene.

Liquid, miscible with ethanol (96 per cent).

n_D^{20}: about 1.52.

bp: about 216 °C.

Estragole used in gas chromatography complies with the following test.

Assay. Gas chromatography (*2.2.28*) as prescribed in the monograph *Anise oil (0804)*.

Test solution. The substance to be examined.

Content: minimum 98.0 per cent, calculated by the normalisation procedure.

Ethanol. *1034800.* [64-17-5].

See *Ethanol, anhydrous R*.

Ethanol, anhydrous. *1034800.* [64-17-5].

See *Ethanol, anhydrous (1318)*.

Ethanol R1. *1034801.*

Complies with the requirements prescribed for the monograph *Ethanol, anhydrous (1318)* with the following additional requirement.

Methanol. Gas chromatography (*2.2.28*).

Test solution. The substance to be examined.

Reference solution. Dilute 0.50 mL of *anhydrous methanol R* to 100.0 mL with the substance to be examined. Dilute 1.0 mL of this solution to 100.0 mL with the substance to be examined.

Column:
- *material*: glass;
- *size*: *l* = 2 m, Ø = 2 mm;
- *stationary phase*: *ethylvinylbenzene-divinylbenzene copolymer R* (75-100 µm).

Carrier gas: *nitrogen for chromatography R*.

Flow rate: 30 mL/min.

Temperature:
- *column*: 130 °C;
- *injection port*: 150 °C;
- *detector*: 200 °C.

Detection: flame-ionisation.

Injection: 1 µL of the test solution and 1 µL of the reference solution, alternately, three times.

After each chromatography, heat the column to 230 °C for 8 min. Integrate the methanol peak. Calculate the percentage methanol content from the following expression:

$$\frac{a \times b}{c - b}$$

a = percentage *V/V* content of methanol in the reference solution,

b = area of the methanol peak in the chromatogram obtained with the test solution,

c = area of the methanol peak in the chromatogram obtained with the reference solution.

Limit:
- *methanol*: maximum 0.005 per cent *V/V*.

Ethanol (96 per cent). *1002500.* [64-17-5].

See *Ethanol (96 per cent) (1317)*.

Ethanol (*x* per cent *V/V*). *1002502.*

Mix appropriate volumes of *water R* and *ethanol (96 per cent) R*, allowing for the effects of warming and volume contraction inherent to the preparation of such a mixture, to obtain a solution whose final content of ethanol corresponds to the value of *x*.

Ethanolamine. C_2H_7NO. (M_r 61.1). *1034900.* [141-43-5]. 2-Aminoethanol.

Clear, colourless, viscous, hygroscopic liquid, miscible with water and with methanol.

d_{20}^{20}: about 1.04.

n_D^{20}: about 1.454.

mp: about 11 °C.

Storage: in an airtight container.

Ether. $C_4H_{10}O$. (M_r 74.1). *1035000.* [60-29-7].

Clear, colourless, volatile and very mobile liquid, very flammable, hygroscopic, soluble in water, miscible with ethanol (96 per cent).

d_{20}^{20}: 0.713 to 0.715.

bp: 34 °C to 35 °C.

Do not distil if the ether does not comply with the test for peroxides.

Peroxides. Place 8 mL of *potassium iodide and starch solution R* in a 12 mL ground-glass-stoppered cylinder about 1.5 cm in diameter. Fill completely with the substance to be examined, shake vigorously and allow to stand in the dark for 30 min. No colour is produced.

The name and concentration of any added stabilisers are stated on the label.

Storage: in an airtight container, protected from light, at a temperature not exceeding 15 °C.

Ether, peroxide-free. *1035100.*

See *Anaesthetic ether (0367)*.

Ethion. $C_9H_{22}O_4P_2S_4$. (M_r 384.5). *1127100.* [563-12-2].

mp: − 24 °C to − 25 °C.

A suitable certified reference solution (10 ng/µL in cyclohexane) may be used.

Ethoxychrysoidine hydrochloride. $C_{14}H_{17}ClN_4O$. (M_r 292.8). *1035200.* [2313-87-3]. 4-[(4-Ethoxyphenyl)diazenyl]phenylene-1,3-diamine hydrochloride.

Reddish powder, soluble in ethanol (96 per cent).

Ethoxychrysoidine solution. *1035201.*

A 1 g/L solution in *ethanol (96 per cent) R*.

Test for sensitivity. To a mixture of 5 mL of *dilute hydrochloric acid R* and 0.05 mL of the ethoxy-chrysoidine solution add 0.05 mL of *0.0167 M bromide-bromate*. The colour changes from red to light yellow within 2 min.

Ethyl acetate. $C_4H_8O_2$. (M_r 88.1). *1035300.* [141-78-6].

Clear, colourless liquid, soluble in water, miscible with ethanol (96 per cent).

d_{20}^{20}: 0.901 to 0.904.

bp: 76 °C to 78 °C.

Ethyl acetate, treated. *1035301.*

Disperse 200 g of *sulfamic acid R* in *ethyl acetate R* and make up to 1000 mL with the same solvent. Stir the suspension obtained for three days and filter through a filter paper.

Storage: use within 1 month.

Ethyl acrylate. $C_5H_8O_2$. (M_r 100.1). *1035400.* [140-88-5]. Ethyl prop-2-enoate.

Colourless liquid.

d_{20}^{20}: about 0.924.

n_D^{20}: about 1.406.

bp: about 99 °C.

mp: about − 71 °C.

4-[(Ethylamino)methyl]pyridine. $C_8H_{12}N_2$. (M_r 136.2). *1101300.* [33403-97-3].

Pale yellow liquid.

d_{20}^{20}: about 0.98.

n_D^{20}: about 1.516.

bp: about 98 °C.

Ethylbenzene. C_8H_{10}. (M_r 106.2). *1035800.* [100-41-4].

Content: minimum 99.5 per cent *m/m*, determined by gas chromatography.

Clear, colourless liquid, practically insoluble in water, soluble in acetone, and in ethanol (96 per cent).

d_{20}^{20}: about 0.87.

n_D^{20}: about 1.496.

bp: about 135 °C.

Ethyl benzoate. $C_9H_{10}O_2$. (M_r 150.2). *1135700.* [93-89-0].

A clear, colourless, refractive liquid, practically insoluble in water, miscible with ethanol (96 per cent) and with light petroleum.

d_4^{25}: about 1.050.

n_D^{20}: about 1.506.

bp: 211 °C to 213 °C.

Ethyl 5-bromovalerate. $C_7H_{13}BrO_2$. (M_r 209.1). *1142900.* [14660-52-7]. Ethyl 5-bromopentanoate.

Clear, colourless liquid.

d_{20}^{20}: about 1.321.

bp: 104 °C to 109 °C.

Ethyl cyanoacetate. $C_5H_7NO_2$. (M_r 113.1). *1035500.* [105-56-6].

Colourless or pale yellow liquid, slightly soluble in water, miscible with ethanol (96 per cent).

bp: 205 °C to 209 °C, with decomposition.

Ethylene chloride. $C_2H_4Cl_2$. (M_r 99.0). *1036000.* [107-06-2]. 1,2-Dichloroethane.

Clear, colourless liquid, soluble in about 120 parts of water and in 2 parts of ethanol (96 per cent).

d_{20}^{20}: about 1.25.

Distillation range (*2.2.11*). Not less than 95 per cent distils between 82 °C and 84 °C.

Ethylenediamine. $C_2H_8N_2$. (M_r 60.1). *1036500.* [107-15-3]. Ethane-1,2-diamine.

Clear, colourless, fuming liquid, strongly alkaline, miscible with water and with ethanol (96 per cent).

bp: about 116 °C.

Ethylene bis[3,3-di(3-*tert*-butyl-4-hydroxyphenyl)butyrate]. *1035900.* [32509-66-3].

See *ethylene bis[3,3-di(3-(1,1-dimethylethyl)-4-hydroxyphenyl)butyrate] R*.

Ethylene bis[3,3-di(3-(1,1-dimethylethyl)-4-hydroxyphenyl)butyrate]. $C_{50}H_{66}O_8$. (M_r 795). *1035900.* [32509-66-3]. Ethylene bis[3,3-di(3-*tert*-butyl-4-hydroxyphenyl)butyrate].

Crystalline powder, practically insoluble in water and in light petroleum, very soluble in acetone and in methanol.

mp: about 165 °C.

(Ethylenedinitrilo)tetra-acetic acid. $C_{10}H_{16}N_2O_8$. (M_r 292.2). *1105800.* [60-00-4]. *N,N'*-1,2-Ethanediylbis[*N*-(carboxymethyl)glycine]. Edetic acid.

White or almost white crystalline powder, very slightly soluble in water.

mp: about 250 °C, with decomposition.

Ethylene glycol. $C_2H_6O_2$. (M_r 62.1). *1036100.* [107-21-1]. Ethane-1,2-diol.

Content: minimum 99.0 per cent.

Colourless, slightly viscous liquid, hygroscopic, miscible with water and with ethanol (96 per cent).

d_{20}^{20}: 1.113 to 1.115.

n_D^{20}: about 1.432.

bp: about 198 °C.

mp: about − 12 °C.

Acidity. To 10 mL add 20 mL of *water R* and 1 mL of *phenolphthalein solution R*. Not more than 0.15 mL of *0.02 M sodium hydroxide* is required to change the colour of the indicator to pink.

Water (*2.5.12*): maximum 0.2 per cent

Ethylene glycol monoethyl ether. $C_4H_{10}O_2$. (M_r 90.1). *1036200.* [110-80-5]. 2-Ethoxyethanol.

Content: minimum 99.0 per cent.

Clear, colourless liquid, miscible with water, with acetone and with ethanol (96 per cent).

d_{20}^{20}: about 0.93.

n_D^{25}: about 1.406.

bp: about 135 °C.

Ethylene glycol monomethyl ether. $C_3H_8O_2$. (M_r 76.1). *1036300.* [109-86-4]. 2-Methoxyethanol.

Content: minimum 99.0 per cent.

Clear, colourless liquid, miscible with water, with acetone and with ethanol (96 per cent).

d_{20}^{20}: about 0.97.

n_D^{20}: about 1.403.

bp: about 125 °C.

Ethylene oxide. C_2H_4O. (M_r 44.05). *1036400.* [75-21-8]. Oxirane.

Colourless, flammable gas, very soluble in water and in anhydrous ethanol.

Liquefaction point: about 12 °C.

Ethylene oxide solution. *1036402.*

Weigh a quantity of cool *ethylene oxide stock solution R* equivalent to 2.5 mg of ethylene oxide into a cool flask and dilute to 50.0 g with *macrogol 200 R1*. Mix well and dilute 2.5 g of this solution to 25.0 mL with *macrogol 200 R1* (5 µg of ethylene oxide per gram of solution). *Prepare immediately before use.*

The solution can be prepared using commercially available reagents instead of *ethylene oxide stock solution R*, making appropriate dilutions.

Ethylene oxide solution R1. *1036403.*

Dilute 1.0 mL of cooled *ethylene oxide stock solution R* (check the exact volume by weighing) to 50.0 mL with *macrogol 200 R1*. Mix well and dilute 2.5 g of this solution to 25.0 mL with *macrogol 200 R1*. Calculate the exact amount of ethylene oxide in parts per million from the volume determined by weighing and taking the relative density of *macrogol 200 R1* as 1.127. *Prepare immediately before use.*

The solution can be prepared using commercially available reagents instead of *ethylene oxide stock solution R*, making appropriate dilutions.

Ethylene oxide solution R2. *1036404.*

Weigh 1.00 g of cold *ethylene oxide stock solution R* (equivalent to 2.5 mg of ethylene oxide) into a cold flask containing 40.0 g of cold *macrogol 200 R1*. Mix and determine the exact mass and dilute to a calculated mass to obtain a solution containing 50 µg of ethylene oxide per gram of solution. Weigh 10.00 g into a flask containing about 30 mL of *water R*, mix and dilute to 50.0 mL with *water R* (10 µg/mL of ethylene oxide). *Prepare immediately before use.*

The solution can be prepared using commercially available reagents instead of *ethylene oxide stock solution R*, making appropriate dilutions.

Ethylene oxide solution R3. *1036405.*

Dilute 10.0 mL of *ethylene oxide solution R2* to 50.0 mL with *water R* (2 µg/mL of ethylene oxide). *Prepare immediately before use.*

Ethylene oxide solution R4. *1036407.*

Dilute 1.0 mL of *ethylene oxide stock solution R1* to 100.0 mL with *water R*. Dilute 1.0 mL of this solution to 25.0 mL with *water R*.

Ethylene oxide stock solution. *1036401.*

All operations carried out in the preparation of these solutions must be conducted in a fume cupboard. The operator must protect both hands and face by wearing polyethylene protective gloves and an appropriate face mask.

Store all solutions in an airtight container in a refrigerator at 4 °C to 8 °C. Carry out all determinations three times.

Into a dry, clean test-tube, cooled in a mixture of 1 part of *sodium chloride R* and 3 parts of crushed ice, introduce a slow current of *ethylene oxide R* gas, allowing condensation onto the inner wall of the test-tube. Using a glass syringe, previously cooled to − 10 °C, inject about 300 µL (corresponding to about 0.25 g) of liquid *ethylene oxide R*

into 50 mL of *macrogol 200 R1*. Determine the absorbed quantity of ethylene oxide by weighing before and after absorption (M_{eo}). Dilute to 100.0 mL with *macrogol 200 R1*. Mix well before use.

Assay. To 10 mL of a 500 g/L suspension of *magnesium chloride R* in *anhydrous ethanol R* add 20.0 mL of *0.1 M alcoholic hydrochloric acid* in a flask. Stopper and shake to obtain a saturated solution and allow to stand overnight to equilibrate. Weigh 5.00 g of ethylene oxide stock solution (2.5 g/L) into the flask and allow to stand for 30 min. Titrate with *0.1 M alcoholic potassium hydroxide* determining the end-point potentiometrically (*2.2.20*).

Carry out a blank titration, replacing the substance to be examined with the same quantity of *macrogol 200 R1*.

Ethylene oxide content in milligrams per gram is given by:

$$\frac{(V_0 - V_1) \times f \times 4.404}{m}$$

V_0, V_1 = volumes of *0.1 M alcoholic potassium hydroxide* used respectively for the blank titration and the assay,

f = factor of the alcoholic potassium hydroxide solution,

m = mass of the sample taken (g).

Ethylene oxide stock solution R1. *1036406.*

A 50 g/L solution of *ethylene oxide R* in *methanol R*.

Either use a commercially available reagent or prepare the solution corresponding to the aforementioned composition.

Ethylene oxide stock solution R2. *1036408.*

A 50 g/L solution of *ethylene oxide R* in *methylene chloride R*.

Either use a commercially available reagent or prepare the solution corresponding to the aforementioned composition.

Ethyl formate. $C_3H_6O_2$. (M_r 74.1). *1035600.* [109-94-4]. Ethyl methanoate.

Clear, colourless, flammable liquid, freely soluble in water, miscible with ethanol (96 per cent).

d_{20}^{20}: about 0.919.

n_D^{20}: about 1.36.

bp: about 54 °C.

2-Ethylhexane-1,3-diol. $C_8H_{18}O_2$. (M_r 146.2). *1105900.* [94-96-2].

Slightly oily liquid, soluble in anhydrous ethanol, 2-propanol, propylene glycol and castor oil.

d_{20}^{20}: about 0.942.

n_D^{20}: about 1.451.

bp: about 244 °C.

2-Ethylhexanoic acid. $C_8H_{16}O_2$. (M_r 144.2). *1036600.* [149-57-5].

Colourless liquid.

d_{20}^{20}: about 0.91.

n_D^{20}: about 1.425.

Related substances. Gas chromatography (*2.2.28*).

Injection: 1 µL of the test solution.

Test solution: suspend 0.2 g of the 2-ethylhexanoic acid in 5 mL of *water R*, add 3 mL of *dilute hydrochloric acid R* and 5 mL of *hexane R*, shake for 1 min, allow the layers to separate and use the upper layer. Carry out the chromatographic procedure as prescribed in the test for 2-ethylhexanoic acid in the monograph on *Amoxicillin sodium (0577)*.

Limit: the sum of the area of any peaks, apart from the principal peak and the peak due to the solvent, is not greater than 2.5 per cent of the area of the principal peak.

Ethyl 4-hydroxybenzoate. *1035700.* [120-47-8].

See *Ethyl parahydroxybenzoate R*.

***N*-Ethylmaleimide.** $C_6H_7NO_2$. (M_r 125.1). *1036700.* [128-53-0]. 1-Ethyl-1*H*-pyrrole-2,5-dione.

Colourless crystals, sparingly soluble in water, freely soluble in ethanol (96 per cent).

mp: 41 °C to 45 °C.

Storage: at a temperature of 2 °C to 8 °C.

Ethyl methanesulfonate. $C_3H_8O_3S$. (M_r 124.2). *1179300.* [62-50-0].

Clear, colourless liquid.

Content: minimum 99.0 per cent.

Density: about 1.206 g/cm³ (20 °C).

n_D^{20}: about 1.418.

bp: about 213 °C.

Ethyl methyl ketone. *1054100.* [78-93-3].

See *methyl ethyl ketone R*.

2-Ethyl-2-methylsuccinic acid. $C_7H_{12}O_4$. (M_r 160.2). *1036800.* [631-31-2]. 2-Ethyl-2-methylbutanedioic acid.

mp: 104 °C to 107 °C.

Ethyl parahydroxybenzoate. *1035700.* [120-47-8].

See *Ethyl parahydroxybenzoate (0900)*.

2-Ethylpyridine. C_7H_9N. (M_r 107.2). *1133400.* [100-71-0].

Colourless or brownish liquid.

d_{20}^{20}: about 0.939.

n_D^{20}: about 1.496.

bp: about 149 °C.

Ethylvinylbenzene-divinylbenzene copolymer. *1036900.*

Porous, rigid, cross-linked polymer beads. Several grades are available with different sizes of bead. The size range of the beads is specified after the name of the reagent in the tests where it is used.

Ethylvinylbenzene-divinylbenzene copolymer R1. *1036901.*

Porous, rigid, cross-linked polymer beads, with a nominal specific surface area of 500 m²/g to 600 m²/g and having pores with a mean diameter of 7.5 nm. Several grades are available with different sizes of beads. The size range of the beads is specified after the name of the reagent in the tests where it is used.

Eugenol. $C_{10}H_{12}O_2$. (M_r 164.2). *1037000.* [97-53-0]. 4-Allyl-2-methoxyphenol.

Colourless or pale yellow, oily liquid, darkening on exposure to air and light and becoming more viscous, practically insoluble in water, miscible with ethanol (96 per cent) and with fatty and essential oils.

d_{20}^{20}: about 1.07.

bp: about 250 °C.

Eugenol used in gas chromatography complies with the following additional test.

Assay. Gas chromatography (*2.2.28*) as prescribed in the monograph *Clove oil (1091)*.

Test solution. The substance to be examined.

Content: minimum 98.0 per cent, calculated by the normalisation procedure.

Storage: protected from light.

Euglobulins, bovine. *1037100.*

Use fresh bovine blood collected into an anticoagulant solution (for example, sodium citrate solution). Discard any haemolysed blood. Centrifuge at 1500-1800 *g* at 15-20 °C to obtain a supernatant plasma poor in platelets.

To 1 L of bovine plasma add 75 g of *barium sulfate R* and shake for 30 min. Centrifuge at not less than 1500-1800 *g* at 15-20 °C and draw off the clear supernatant. Add 10 mL of a 0.2 mg/mL solution of *aprotinin R* and shake to ensure mixing. In a container with a minimum capacity of 30 L in a chamber at 4 °C introduce 25 L of *distilled water R* at 4 °C and add about 500 g of solid carbon dioxide. Immediately add, while stirring, the supernatant obtained from the plasma. A white precipitate is formed. Allow to settle at 4 °C for 10-15 h. Remove the clear supernatant solution by siphoning. Collect the precipitate by centrifuging at 4 °C. Suspend the precipitate by dispersing mechanically in 500 mL of *distilled water R* at 4 °C, shake for 5 min and collect the precipitate by centrifuging at 4 °C. Disperse the precipitate mechanically in 60 mL of a solution containing 9 g/L of *sodium chloride R* and 0.9 g/L *sodium citrate R* and adjust to pH 7.2-7.4 by adding a 10 g/L solution of *sodium hydroxide R*. Filter through a sintered glass filter (*2.1.2*); to facilitate the dissolution of the precipitate crush the particles of the precipitate with a suitable instrument. Wash the filter and the instrument with 40 mL of the chloride-citrate solution described above and dilute to 100 mL with the same solution. Freeze-dry the solution. The yields are generally 6 g to 8 g of euglobulins per litre of bovine plasma.

Test for suitability. For this test, prepare the solutions using *phosphate buffer solution pH 7.4 R* containing 30 g/L of *bovine albumin R*.

Into a test-tube 8 mm in diameter placed in a water-bath at 37 °C introduce 0.2 mL of a solution of a reference preparation of urokinase containing 100 IU/mL and 0.1 mL of a solution of *human thrombin R* containing 20 IU/mL. Add rapidly 0.5 mL of a solution containing 10 mg of bovine euglobulins per millilitre. A firm clot forms in less than 10 s. Note the time that elapses between the addition of the solution of bovine euglobulins and the lysis of the clot. The lysis time does not exceed 15 min.

Storage: protected from moisture at 4 °C; use within 1 year.

Euglobulins, human. *1037200.*

For the preparation, use fresh human blood collected into an anticoagulant solution (for example sodium citrate solution) or human blood for transfusion that has been collected in plastic blood bags and which has just reached its expiry date. Discard any haemolysed blood. Centrifuge at 1500-1800 *g* at 15 °C to obtain a supernatant plasma poor in platelets. Iso-group plasmas may be mixed.

To 1 L of the plasma add 75 g of *barium sulfate R* and shake for 30 min. Centrifuge at not less than 15 000 *g* at 15 °C and draw off the clear supernatant. Add 10 mL of a solution of *aprotinin R* containing 0.2 mg/mL and shake to ensure mixing. In a container with a minimum capacity of 30 L in a chamber at 4 °C introduce 25 L of *distilled water R* at 4 °C and add about 500 g of solid carbon dioxide. Immediately add while stirring the supernatant obtained from the plasma. A white precipitate is formed. Allow to settle at 4 °C for 10-15 h. Remove the clear supernatant solution by siphoning. Collect the precipitate by centrifuging at 4 °C. Suspend the precipitate by dispersing mechanically in 500 mL of *distilled water R* at 4 °C, shake for 5 min and collect the precipitate by centrifuging at 4 °C. Disperse the precipitate mechanically in 60 mL of a solution containing 9 g/L of *sodium chloride R* and 0.9 g/L of *sodium citrate R*, and adjust the pH to 7.2-7.4 by adding a 10 g/L solution of *sodium hydroxide R*. Filter through a sintered-glass filter (*2.1.2*); to facilitate the dissolution of the precipitate crush the particles of the precipitate with a suitable instrument. Wash the filter and the instrument with 40 mL of the chloride-citrate solution described above and dilute to 100 mL with the same solution. Freeze-dry the solution. The yields are generally 6 g to 8 g of euglobulins per litre of human plasma.

Test for suitability. For this test, prepare the solutions using *phosphate buffer solution pH 7.2 R* containing 30 g/L of *bovine albumin R*. Into a test-tube 8 mm in diameter placed in a water-bath at 37 °C introduce 0.1 mL of a solution of a reference preparation of streptokinase containing 10 IU of streptokinase activity per millilitre and 0.1 mL of a solution of *human thrombin R* containing 20 IU/mL. Add rapidly 1 mL of a solution containing 10 mg of human euglobulins per millilitre. A firm clot forms in less than 10 s. Note the time that elapses between the addition of the solution of human euglobulins and the lysis of the clot. The lysis time does not exceed 15 min.

Storage: in an airtight container at 4 °C; use within 1 year.

Factor VII-deficient plasma. *1185900.*

Plasma that is deficient in factor VII.

Factor Xa, bovine, coagulation. *1037300.* [9002-05-5].

An enzyme which converts prothrombin to thrombin. The semi-purified preparation is obtained from liquid bovine plasma and it may be prepared by activation of the zymogen factor X with a suitable activator such as Russell's viper venom.

Storage: freeze-dried preparation at – 20 °C and frozen solution at a temperature lower than – 20 °C.

Factor Xa solution, bovine. *1037301.*

Reconstitute as directed by the manufacturer and dilute with *tris(hydroxymethyl)aminomethane sodium chloride buffer solution pH 7.4 R*.

Any change in the absorbance of the solution, measured at 405 nm (*2.2.25*) against *tris(hydroxymethyl)aminomethane sodium chloride buffer solution pH 7.4 R* and from which the blank absorbance has been substracted, is not more than 0.20 per minute.

Factor Xa solution, bovine R1. *1037302.*

Reconstitute as directed by the manufacturer and dilute to 1.4 nkat/mL with *tris(hydroxymethyl)aminomethane-EDTA buffer solution pH 8.4 R*.

***(E,E)*-Farnesol.** $C_{15}H_{26}O$. (M_r 222.4). *1161000.* [106-28-5].
trans,trans-Farnesol. (2*E*,6*E*)-3,7,11-Trimethyldodeca-2,6,10-trien-1-ol.

Fast blue B salt. $C_{14}H_{12}Cl_2N_4O_2$. (M_r 339.2). *1037400.* [84633-94-3].

Schultz No. 490.

Colour Index No. 37235.
3,3′-Dimethoxy(biphenyl)-4,4′-bisdiazonium dichloride.

Dark green powder, soluble in water. It is stabilised by addition of zinc chloride.

Storage: in an airtight container, at a temperature between 2 °C and 8 °C.

Fast red B salt. $C_{17}H_{13}N_3O_9S_2$. (M_r 467.4). *1037500.* [49735-71-9].

Schultz No. 155.

Colour Index No. 37125.
2-Methoxy-4-nitrobenzenediazonium hydrogen naphthalene-1,5-disulfonate.

Orange-yellow powder, soluble in water, slightly soluble in ethanol (96 per cent).

Storage: in an airtight container, protected from light, at 2 °C to 8 °C.

Fenchlorphos. $C_8H_8Cl_3O_3PS$. (M_r 321.5). *1127200.* [299-84-3].

mp: about 35 °C.

A suitable certified reference solution (10 ng/µL in cyclohexane) may be used.

Fenchone. $C_{10}H_{16}O$. (M_r 152.2). *1037600.* [7787-20-4].
(1*R*)-1,3,3-Trimethylbicyclo[2.2.1]heptan-2-one.

Oily liquid, miscible with ethanol (96 per cent), practically insoluble in water.

n_D^{20} : about 1.46.

bp_{15mm}: 192 °C to 194 °C.

Fenchone used in gas chromatography complies with the following test.

Assay. Gas chromatography (*2.2.28*) as prescribed in the monograph *Bitter fennel (0824)*.

Test solution. The substance to be examined.

Content: minimum 98.0 per cent, calculated by the normalisation procedure.

Fenvalerate. $C_{25}H_{22}ClNO_3$. (M_r 419.9). *1127300.* [51630-58-1].

bp: about 300 °C.

A suitable certified reference solution (10 ng/µL in cyclohexane) may be used.

Ferric ammonium sulfate. $FeNH_4(SO_4)_2,12H_2O$. (M_r 482.2). *1037700.* [7783-83-7]. Ammonium iron disulfate dodecahydrate.

Pale-violet crystals, efflorescent, very soluble in water, practically insoluble in ethanol (96 per cent).

Ferric ammonium sulfate solution R2. *1037702.*

A 100 g/L solution. If necessary filter before use.

Ferric ammonium sulfate solution R5. *1037704.*

Shake 30.0 g of *ferric ammonium sulfate R* with 40 mL of *nitric acid R* and dilute to 100 mL with *water R*. If the solution is turbid, centrifuge or filter it.

Storage: protected from light.

Ferric ammonium sulfate solution R6. *1037705.*

Dissolve 20 g of *ferric ammonium sulfate R* in 75 mL of *water R*, add 10 mL of a 2.8 per cent *V/V* solution of *sulfuric acid R* and dilute to 100 mL with *water R*.

Ferric chloride. $FeCl_3,6H_2O$. (M_r 270.3). *1037800.* [10025-77-1]. Iron trichloride hexahydrate.

Yellowish-orange or brownish crystalline masses, deliquescent, very soluble in water, soluble in ethanol (96 per cent). On exposure to light, ferric chloride and its solutions are partly reduced.

Storage: in an airtight container.

Ferric chloride solution R1. *1037801.*

A 105 g/L solution.

Ferric chloride solution R2. *1037802.*

A 13 g/L solution.

Ferric chloride solution R3. *1037803.*

Dissolve 2.0 g of *ferric chloride R* in *anhydrous ethanol R* and dilute to 100.0 mL with the same solvent.

Ferric chloride-ferricyanide-arsenite reagent. *1037805.*

Immediately before use mix 10 mL of a 27 g/L solution of *ferric chloride R* in *dilute hydrochloric acid R*, 7 mL of *potassium ferricyanide solution R*, 3 mL of *water R* and 10 mL of *sodium arsenite solution R*.

Ferric chloride-sulfamic acid reagent. *1037804.*

A solution containing 10 g/L of *ferric chloride R* and 16 g/L of *sulfamic acid R*.

Ferric nitrate. $Fe(NO_3)_3,9H_2O$. (M_r 404). *1106100.* [7782-61-8].

Content: minimum 99.0 per cent *m/m* of $Fe(NO_3)_3,9H_2O$.

Light-purple crystals or crystalline mass, very soluble in water.

Free acid: not more than 0.3 per cent (as HNO_3).

Ferric sulfate. $Fe_2(SO_4)_3,xH_2O$. *1037900.* [10028-22-5]. Iron(III) trisulfate hydrated.

Yellowish-white powder, very hygroscopic, decomposes in air, slightly soluble in water and in ethanol (96 per cent).

Storage: in an airtight container, protected from light.

Ferric sulfate solution. *1037901.*

Dissolve 50 g of *ferric sulfate R* in an excess of *water R*, add 200 mL of *sulfuric acid R* and dilute to 1000 mL with *water R*.

Ferric sulfate pentahydrate. $Fe_2(SO_4)_3,5H_2O$. (M_r 489.9). *1153700.* [142906-29-4].

White or yellowish powder.

Ferrocyphene. $C_{26}H_{16}FeN_6$. (M_r 468.3). *1038000.* [14768-11-7]. Dicyanobis(1,10-phenanthroline)iron(II).

Violet-bronze, crystalline powder, practically insoluble in water and in ethanol (96 per cent).

Storage: protected from light and moisture.

Ferroin. *1038100.* [14634-91-4].

Dissolve 0.7 g of *ferrous sulfate R* and 1.76 g of *phenanthroline hydrochloride R* in 70 mL of *water R* and dilute to 100 mL with the same solvent.

Test for sensitivity. To 50 mL of *dilute sulfuric acid R* add 0.15 mL of *osmium tetroxide solution R* and 0.1 mL of the ferroin. After the addition of 0.1 mL of *0.1 M ammonium and cerium nitrate* the colour changes from red to light blue.

Ferrous ammonium sulfate. $Fe(NH_4)_2(SO_4)_2,6H_2O$. (M_r 392.2). *1038200.* [7783-85-9]. Diammonium iron disulfate hexahydrate.

Pale bluish-green crystals or granules, freely soluble in water, practically insoluble in ethanol (96 per cent).

Storage: protected from light.

Ferrous sulfate. *1038300.* [7782-63-0].

See *Ferrous sulfate heptahydrate (0083)*.

Ferrous sulfate solution R2. *1038301.*

Dissolve 0.45 g of *ferrous sulfate R* in 50 mL of *0.1 M hydrochloric acid* and dilute to 100 mL with *carbon dioxide-free water R*. Prepare immediately before use.

Ferulic acid. $C_{10}H_{10}O_4$. (M_r 194.2). *1149500.* [1135-24-6]. 4-Hydroxy-3-methoxycinnamic acid. 3-(4-Hydroxy-3-methoxyphenyl)propenoic acid.

Faint yellow powder, freely soluble in methanol.

mp: 172.9 °C to 173.9 °C.

Ferulic acid used in the assay of eleutherosides in Eleutherococcus (1419) complies with the following additional test.

Assay. Liquid chromatography (*2.2.29*) as prescribed in the monograph *Eleutherococcus (1419)*.

Content: minimum 99 per cent, calculated by the normalisation procedure.

Fibrin blue. *1101400.*

Mix 1.5 g of fibrin with 30 mL of a 5 g/L solution of *indigo carmine R* in 1 per cent *V/V dilute hydrochloric acid R*. Heat the mixture to 80 °C and maintain at this temperature whilst stirring for about 30 min. Allow to cool. Filter. Wash extensively by resuspension in 1 per cent *V/V dilute hydrochloric acid R* and mixing for about 30 min; filter. Repeat the washing operation three times. Dry at 50 °C. Grind.

Fibrin congo red. *1038400.*

Take 1.5 g of fibrin and leave overnight in 50 mL of a 20 g/L solution of *congo red R* in *ethanol (90 per cent V/V) R*. Filter, rinse the fibrin with *water R* and store under *ether R*.

Fibrinogen. *1038500.* [9001-32-5].

See *Human fibrinogen, freeze-dried (0024).*

Fixing solution. *1122600.*

To 250 mL of *methanol R*, add 0.27 mL of *formaldehyde R* and dilute to 500.0 mL with *water R*.

Fixing solution for isoelectric focusing in polyacrylamide gel. *1138700.*

A solution containing 35 g of *sulfosalicylic acid R* and 100 g of *trichloroacetic acid R* per litre of *water R*.

Flufenamic acid. $C_{14}H_{10}F_3NO_2$. (M_r 281.2). *1106200.* [530-78-9]. 2-[[3-(Trifluoromethyl)phenyl]amino]benzoic acid.

Pale yellow, crystalline powder or needles, practically insoluble in water, freely soluble in ethanol (96 per cent).

mp: 132 °C to 135 °C.

Flumazenil. *1149600.* [78755-81-4].

See *Flumazenil (1326).*

Flunitrazepam. *1153800.* [1622-62-4].

See *Flunitrazepam (0717).*

Fluorene. $C_{13}H_{10}$. (M_r 166.2). *1127400.* [86-73-7]. Diphenylenemethane.

White or almost white crystals, freely soluble in anhydrous acetic acid, soluble in hot ethanol (96 per cent).

mp: 113 °C to 115 °C.

(9-Fluorenyl)methyl chloroformate. $C_{15}H_{11}ClO_2$. (M_r 258.7). *1180100.* [28920-43-6]. Fluoren-9-ylmethyl chloromethanoate.

mp: about 63 °C.

Fluorescamine. $C_{17}H_{10}O_4$. (M_r 278.3). *1135800.* [38183-12-9]. 4-Phenylspiro[furan-2(3*H*),1'(3'*H*)-isobenzofuran]-3,3'-dione.

mp: 154 °C to 155 °C.

Fluorescein. $C_{20}H_{12}O_5$. (M_r 332.3). *1106300.* [2321-07-5]. 3′,6′-Dihydroxyspiro[isobenzofurane-1(3*H*),9′-[9*H*]xanthen]-3-one.

Orange-red powder, practically insoluble in water, soluble in warm ethanol (96 per cent), soluble in alkaline solutions. In solution, fluorescein displays a green fluorescence.

mp: about 315 °C.

Fluorescein-conjugated rabies antiserum. *1038700.*

Immunoglobulin fraction with a high rabies antibody titre, prepared from the sera of suitable animals that have been immunised with inactivated rabies virus; the immunoglobulin is conjugated with fluorescein isothiocyanate.

2-Fluoro-2-deoxy-D-glucose. $C_6H_{11}FO_5$. (M_r 182.2). *1113900.* [86783-82-6].

White or almost white crystalline powder.

mp: 174 °C to 176 °C.

2-Fluoro-2-deoxy-D-mannose. $C_6H_{11}FO_5$. (M_r 182.1). *1172100.* [38440-79-8].

Colourless semi-solid.

Fluorodinitrobenzene. $C_6H_3FN_2O_4$. (M_r 186.1). *1038800.* [70-34-8]. 1-Fluoro-2,4-dinitrobenzene.

Pale yellow liquid or crystals, soluble in propylene glycol.

mp: about 29 °C.

Content: minimum 99.0 per cent, determined by gas chromatography.

DL-6-Fluorodopa hydrochloride. $C_9H_{11}ClFNO_4$. (M_r 251.6). *1169200.* (2*RS*)-2-Amino-3-(2-fluoro-4,5-dihydroxyphenyl)propanoic acid hydrochloride. 2-Fluoro-5-hydroxy-DL-tyrosine hydrochloride.

White or almost white powder.

6-Fluorolevodopa hydrochloride. $C_9H_{11}ClFNO_4$. (M_r 251.6). *1169300.* [144334-59-8]. (2*S*)-2-Amino-3-(2-fluoro-4,5-dihydroxyphenyl)propanoic acid hydrochloride. 2-Fluoro-5-hydroxy-L-tyrosine hydrochloride.

Colourless or almost colourless solid, soluble in water.

Fluoromisonidazole. $C_6H_8FN_3O_3$. (M_r 189.1). *1186000.* [13551-89-8]. (2*RS*)-1-Fluoro-3-(2-nitro-1*H*-imidazol-1-yl)propan-2-ol. FMISO.

Content: minimum 95 per cent.

Yellow crystals.

1-Fluoro-2-nitro-4-(trifluoromethyl)benzene. $C_7H_3F_4NO_2$. (M_r 209.1). *1038900.* [367-86-2].

mp: about 197 °C.

Folic acid. *1039000.* [75708-92-8].

See *Folic acid (0067).*

Formaldehyde. *1039100.* [50-00-0].

See *Formaldehyde solution R.*

Formaldehyde solution. *1039101.*

See *Formaldehyde solution (35 per cent) (0826).*

Formamide. CH_3NO. (M_r 45.0). *1039200.* [75-12-7].

Clear, colourless, oily liquid, hygroscopic, miscible with water and with ethanol (96 per cent). It is hydrolysed by water.

d_{20}^{20}: about 1.134.

bp: about 210 °C.

Content: minimum 99.5 per cent.

Storage: in an airtight container.

Formamide R1. *1039202.*

Complies with the requirements prescribed for *formamide R* with the following additional requirement.

Water (*2.5.12*): maximum 0.1 per cent determined with an equal volume of *anhydrous methanol R*.

Formamide, treated. *1039201.*

Disperse 1.0 g of *sulfamic acid R* in 20.0 mL of *formamide R* containing 5 per cent *V/V* of *water R*.

Formic acid, anhydrous. CH_2O_2. (M_r 46.03). *1039300.* [64-18-6].

Content: minimum 98.0 per cent *m/m*.

Colourless liquid, corrosive, miscible with water and with ethanol (96 per cent).

d_{20}^{20}: about 1.22.

Assay. Weigh accurately a conical flask containing 10 mL of *water R*, quickly add about 1 mL of the acid and weigh again. Add 50 mL of *water R* and titrate with *1 M sodium hydroxide*, using 0.5 mL of *phenolphthalein solution R* as indicator.

1 mL of *1 M sodium hydroxide* is equivalent to 46.03 mg of CH_2O_2.

Fructose. *1106400.* [57-48-7].

See *Fructose (0188).*

Fuchsin, basic. *1039400.* [632-99-5].

A mixture of rosaniline hydrochloride ($C_{20}H_{20}ClN_3$; M_r 337.9; Colour Index No. 42510; Schultz No. 780) and *para*-rosaniline hydrochloride ($C_{19}H_{18}ClN_3$; M_r 323.8; Colour Index No. 42500; Schultz No. 779).

If necessary, purify in the following manner. Dissolve 1 g in 250 mL of *dilute hydrochloric acid R*. Allow to stand for 2 h at room temperature, filter and neutralise with *dilute sodium*

hydroxide solution R and add 1 mL to 2 mL in excess. Filter the precipitate through a sintered-glass filter (40) (*2.1.2*) and wash with *water R*. Dissolve the precipitate in 70 mL of *methanol R*, previously heated to boiling, and add 300 mL of *water R* at 80 °C. Allow to cool to room temperature, filter and dry the crystals *in vacuo*.

Crystals with a greenish-bronze sheen, soluble in water and in ethanol (96 per cent).

Storage: protected from light.

Fuchsin solution, decolorised. *1039401.*

Dissolve 0.1 g of *basic fuchsin R* in 60 mL of *water R*. Add a solution containing 1 g of *anhydrous sodium sulfite R* or 2 g of *sodium sulfite R* in 10 mL of *water R*. Slowly and with continuous shaking add 2 mL of *hydrochloric acid R*. Dilute to 100 mL with *water R*. Allow to stand protected from light for at least 12 h, decolorise with *activated charcoal R* and filter. If the solution becomes cloudy, filter before use. If on standing the solution becomes violet, decolorise again by adding *activated charcoal R*.

Test for sensitivity. To 1.0 mL add 1.0 mL of *water R* and 0.1 mL of *aldehyde-free alcohol R*. Add 0.2 mL of a solution containing 0.1 g/L of formaldehyde (CH_2O, M_r 30.0). A pale-pink colour develops within 5 min.

Storage: protected from light.

Fuchsin solution, decolorised R1. *1039402.*

To 1 g of *basic fuchsin R* add 100 mL of *water R*. Heat to 50 °C and allow to cool with occasional shaking. Allow to stand for 48 h, shake and filter. To 4 mL of the filtrate add 6 mL of *hydrochloric acid R*, mix and dilute to 100 mL with *water R*. Allow to stand for at least 1 h before use.

Fucose. $C_6H_{12}O_5$. (M_r 164.2). *1039500.* [6696-41-9]. 6-Deoxy-L-galactose.

White or almost white powder, soluble in water and in ethanol (96 per cent).

$[\alpha]_D^{20}$: about − 76, determined on a 90 g/L solution 24 h after dissolution.

mp: about 140 °C.

Fumaric acid. $C_4H_4O_4$. (M_r 116.1). *1153200.* [110-17-8]. (*E*)-Butenedioic acid.

White or almost white crystals, slightly soluble in water, soluble in ethanol (96 per cent), slightly soluble in acetone.

mp: about 300 °C.

Furfural. $C_5H_4O_2$. (M_r 96.1). *1039600.* [98-01-1]. 2-Furaldehyde. 2-Furanecarbaldehyde.

Clear, colourless to brownish-yellow, oily liquid, miscible in 11 parts of water, miscible with ethanol (96 per cent).

d_{20}^{20}: 1.155 to 1.161.

Distillation range (*2.2.11*). Not less than 95 per cent distils between 159 °C and 163 °C.

Storage: in a dark place.

Galactose. $C_6H_{12}O_6$. (M_r 180.2). *1039700.* [59-23-4]. D-(+)-Galactose.

White or almost white, crystalline powder, freely soluble in water.

$[\alpha]_D^{20}$: + 79 to + 81, determined on a 100 g/L solution in *water R* containing about 0.05 per cent of NH_3.

Gallic acid. $C_7H_6O_5,H_2O$. (M_r 188.1). *1039800.* [5995-86-8]. 3,4,5-Trihydroxybenzoic acid monohydrate.

Crystalline powder or long needles, colourless or slightly yellow, soluble in water, freely soluble in hot water, in ethanol (96 per cent) and in glycerol.

It loses its water of crystallisation at 120 °C.

mp: about 260 °C, with decomposition.

Chromatography. Thin-layer chromatography (*2.2.27*) as prescribed in the monograph *Bearberry leaf (1054)*; the chromatogram shows only one principal spot.

Gallium (^{68}Ga) chloride solution. $^{68}GaCl_3$. (M_r 174.3). *1182500.*

Solution containing gallium-68 in the form of gallium chloride in *dilute hydrochloric acid R*.

Content: 90 per cent to 110 per cent of the declared gallium-68 radioactivity at the date and time stated on the label.

Gastric juice, artificial. *1039900.*

Dissolve 2.0 g of *sodium chloride R* and 3.2 g of *pepsin powder R* in *water R*. Add 80 mL of *1 M hydrochloric acid* and dilute to 1000 mL with *water R*.

GC concentrical column. *1135100.*

A commercially available system consisting of 2 concentrically arranged tubes. The outer tube is packed with molecular sieves and the inner tube is packed with a porous polymer mixture. The main application is the separation of gases.

Gelatin. *1040000.* [9000-70-8].

See *Gelatin (0330)*.

Gelatin, hydrolysed. *1040100.*

Dissolve 50 g of *gelatin R* in 1000 mL of *water R*. Autoclave in saturated steam at 121 °C for 90 min and freeze dry.

Geraniol. $C_{10}H_{18}O$. (M_r 154.2). *1135900.* [106-24-1]. (*E*)-3,7-Dimethylocta-2,6-dien-1-ol.

Oily liquid, slight odour of rose, practically insoluble in water, miscible with ethanol (96 per cent).

Geraniol used in gas chromatography complies with the following additional test.

Assay. Gas chromatography (*2.2.28*) as prescribed in the monograph *Citronella oil (1609)*.

Content: minimum 98.5 per cent, calculated by the normalisation procedure.

Storage: in an airtight container, protected from light

Geranyl acetate. $C_{12}H_{20}O_2$. (M_r 196.3). *1106500.* [105-87-3]. (*E*)-3,7-Dimethylocta-2,6-dien-1-yl acetate.

Colourless or slightly yellow liquid, slight odour of rose and lavender.

Geranyl acetate used in gas chromatography complies with the following additional test.

Assay. Gas chromatography (*2.2.28*) as prescribed in the monograph *Bitter-orange-flower oil (1175)*.

Test solution. The substance to be examined.

Content: minimum 98.0 per cent, calculated by the normalisation procedure.

Ginsenoside Rb1. $C_{54}H_{92}O_{23},3H_2O$. (M_r 1163). *1127500.* [41753-43-9]. (20*S*)-3β-Di-D-glucopyranosyl-20-di-D-glucopyranosylprotopanaxadiol. (20*S*)-3β-[(2-*O*-β-D-Glucopyranosyl-β-D-glucopyranosyl)oxy]-20-[(6-*O*-β-D-glucopyranosyl-β-D-glucopyranosyl)oxy]-5α-dammar-24-en-12β-ol. (20*S*)-3β-[(2-*O*-β-D-Glucopyranosyl-β-D-glucopyranosyl)oxy]-20-[(6-*O*-β-D-glucopyranosyl-β-D-glucopyranosyl)oxy]-4,4,8,14-tetramethyl-18-nor-5α-cholest-24-en-12β-ol.

A colourless solid, soluble in water, in anhydrous ethanol and in methanol.

$[\alpha]_D^{20}$: + 11.3 determined on a 10 g/L solution in *methanol R*.

mp: about 199 °C.

Water (2.5.12): maximum 6.8 per cent.

Assay. Liquid chromatography (*2.2.29*) as prescribed in the monograph *Ginseng (1523)*.

Test solution. Dissolve 3.0 mg, accurately weighted, of *ginsenoside Rb1* in 10 mL of *methanol R*.

Content: minimum 95.0 per cent, calculated by the normalisation procedure.

Ginsenoside Re. $C_{48}H_{82}O_{18}$. (M_r 947.2). *1157800.* [52286-59-6]. (3β,6α,12β)-20-(β-D-Glucopyranosyloxy)-3,12-dihydroxydammar-24-en-6-yl 2-*O*-(6-deoxy-α-L-mannopyranosyl)-β-D-glucopyranoside.

Colourless solid, soluble in water, in ethanol (96 per cent) and in methanol.

Ginsenoside Rf. $C_{42}H_{72}O_{14}$,$2H_2O$. (M_r 837). *1127700.* [52286-58-5]. (20*S*)-6-*O*-[β-D-Glucopyranosyl-(1→2)-β-D-glycopyranoside]-dammar-24-ene-3β,6α,12β,20-tetrol.

A colourless solid, soluble in water, in anhydrous ethanol and in methanol.

$[\alpha]_D^{20}$: + 12.8 determined on a 10 g/L solution in *methanol R*.

mp: about 198 °C.

Ginsenoside Rg1. $C_{42}H_{72}O_{14}$,$2H_2O$. (M_r 837). *1127600.* [22427-39-0]. (20*S*)-6β-D-Glucopyranosyl-D-glucopyranosylprotopanaxatriol. (20*S*)-6α,20-Bis(β-D-glucopyranosyloxy)-5α-dammar-24-ene-3β,12β-diol. (20*S*)-6α,20-Bis(β-D-glucopyranosyloxy)-4,4,8,14-tetramethyl-18-nor-5α-cholest-24-ene-3β,12β-diol.

A colourless solid, soluble in water, in anhydrous ethanol and in methanol.

$[\alpha]_D^{20}$: + 31.2 determined on a 10 g/L solution in *methanol R*.

mp: 188 °C to 191 °C.

Water (2.5.12): maximum 4.8 per cent.

Assay. Liquid chromatography (*2.2.29*) as prescribed in the monograph *Ginseng (1523)*.

Test solution. Dissolve 3.0 mg, accurately weighted, of *ginsenoside Rg1* in 10 mL of *methanol R*.

Content: minimum 95.0 per cent, calculated by the normalisation procedure.

Ginsenoside Rg2. $C_{42}H_{72}O_{13}$. (M_r 785). *1182600.* [52286-74-5]. 3β,12β,20-Trihydroxydammar-24-en-6α-yl 2-*O*-(6-deoxy-α-L-mannopyranosyl)-β-D-glucopyranoside.

Gitoxin. $C_{41}H_{64}O_{14}$. (M_r 781). *1040200.* [4562-36-1]. Glycoside of *Digitalis purpurea* L. 3β-(*O*-2,6-Dideoxy-β-d-*ribo*-hexopyranosyl-(1→4)-*O*-2,6-dideoxy-β-d-*ribo*-hexopyranosyl-(1→4)-2,6-dideoxy-β-d-*ribo*-hexopyranosyloxy)-14,16β-dihydroxy-5β,14β-card-20(22)-enolide.

A white or almost white, crystalline powder, practically insoluble in water and in most common organic solvents, soluble in pyridine.

$[\alpha]_D^{20}$: + 20 to + 24, determined on a 5 g/L solution in a mixture of equal volumes of *chloroform R* and *methanol R*.

Chromatography. Thin-layer chromatography (*2.2.27*) as prescribed in the monograph *Digitalis leaf (0117)*; the chromatogram shows only one principal spot.

Glucosamine hydrochloride. $C_6H_{14}ClNO_5$. (M_r 215.6). *1040300.* [66-84-2]. D-Glucosamine hydrochloride.

Crystals, soluble in water.

$[\alpha]_D^{20}$: + 100, decreasing to + 47.5 after 30 min, determined on a 100 g/L solution.

Glucose. *1025700.* [50-99-7].

See *Anhydrous glucose (0177)*.

D-Glucuronic acid. $C_6H_{10}O_7$. (M_r 194.1). *1119700.* [6556-12-3].

Content: minimum 96.0 per cent, calculated with reference to the substance dried *in vacuo* (*2.2.32*).

Soluble in water and in ethanol (96 per cent).

Shows mutarotation: $[\alpha]_D^{24}$: + 11.7 → + 36.3.

Assay. Dissolve 0.150 g in 50 mL of *anhydrous methanol R* while stirring under nitrogen. Titrate with *0.1 M tetrabutylammonium hydroxide*, protecting the solution from atmospheric carbon dioxide throughout solubilisation and titration. Determine the end-point potentiometrically (*2.2.20*).

1 mL of *0.1 M tetrabutylammonium hydroxide* is equivalent to 19.41 mg of $C_6H_{10}O_7$.

Glutamic acid. *1040400.* [56-86-0].

See *Glutamic acid (0750)*.

Glutamyl endopeptidase for peptide mapping. *1173300.* [137010-42-5]. Endoproteinase Glu-C of high purity from *Staphylococcus aureus* strain V8 (EC 3.4.21.19).

L-γ-Glutamyl-L-cysteine. $C_8H_{14}N_2O_5S$. (M_r 250.3). *1157900.* [636-58-8].

Glutaraldehyde. $C_5H_8O_2$. (M_r 100.1). *1098300.* [111-30-8].

Oily liquid, soluble in water.

n_D^{25} : about 1.434.

bp: about 188 °C.

Glutaric acid. $C_5H_8O_4$. (M_r 132.1). *1149700.* [110-94-1]. Pentanedioic acid.

White or almost white, crystalline powder.

L-Glutathione, oxidised. $C_{20}H_{32}N_6O_{12}S_2$. (M_r 612.6). *1158000.* [27025-41-8]. Bis(L-γ-glutamyl-L-cysteinylglycine) disulfide.

Glycerol. *1040500.* [56-81-5].

See *Glycerol (0496)*.

Glycerol R1. *1040501.*

Complies with the requirements prescribed for the monograph *Glycerol (0496)* and free from diethylene glycol when examined as prescribed in the test for impurity A and related substances in that monograph.

Glycerol (85 per cent). *1040600.*

See *Glycerol (85 per cent) (0497)*.

Glycerol (85 per cent) R1. *1040601.*

Complies with the requirements prescribed for the monograph *Glycerol 85 per cent (0497)* and free from diethylene glycol when examined as prescribed in the test for impurity A and related substances in that monograph.

Glycerol 1-decanoate. $C_{13}H_{26}O_4$. (M_r 246.3). *1169400.* [2277-23-8]. (2*RS*)-2,3-Dihydroxypropyl decanoate. α-Monocaprin. 1-Monodecanoyl-*rac*-glycerol.

Content: about 99 per cent.

Glycerol 1-octanoate. $C_{11}H_{22}O_4$. (M_r 218.3). *1169500.* [502-54-5]. (2*RS*)-2,3-Dihydroxypropyl octanoate. α-Monocaprylin. 1-Monooctanoyl-*rac*-glycerol.

Content: about 99 per cent.

Glycidol. $C_3H_6O_2$. (M_r 74.1). *1127800.* [556-52-5].

Slightly viscous liquid, miscible with water.

d_4^{20} : about 1.115.

n_D^{20} : about 1.432.

Glycine. *1040700.* [56-40-6].

See *Glycine (0614)*.

Glycollic acid. $C_2H_4O_3$. (M_r 76.0). *1040800.* [79-14-1]. 2-Hydroxyacetic acid.

Crystals, soluble in water, in acetone, in ethanol (96 per cent) and in methanol.

mp: about 80 °C.

Glycyrrhetic acid. $C_{30}H_{46}O_4$. (M_r 470.7). *1040900.* [471-53-4]. Glycyrrhetinic acid. 12,13-Didehydro-3β-hydroxy-11-oxo-olean-30-oic acid.

A mixture of α- and β-glycyrrhetic acids in which the β-isomer is predominant.

White or yellowish-brown powder, practically insoluble in water, soluble in anhydrous ethanol and in glacial acetic acid.

$[\alpha]_D^{20}$: + 145 to + 155, determined on a 10.0 g/L solution in *anhydrous ethanol R*.

Chromatography. Thin-layer chromatography (*2.2.27*) using *silica gel GF$_{254}$ R* as the coating substance; prepare the slurry using a 0.25 per cent *V/V* solution of *phosphoric acid R*. Apply to the plate 5 µL of a 5 g/L solution of the glycyrrhetic acid in a mixture of equal volumes of *chloroform R* and *methanol R*. Develop over a path of 10 cm using a mixture of 5 volumes of *methanol R* and 95 volumes of *chloroform R*. Examine the chromatogram in ultraviolet light at 254 nm. The chromatogram shows a dark spot (R_F about 0.3) corresponding to β-glycyrrhetic acid and a smaller spot (R_F about 0.5) corresponding to α-glycyrrhetic acid. Spray with *anisaldehyde solution R* and heat at 100-105 °C for 10 min. Both spots are coloured bluish-violet. Between them a smaller bluish-violet spot may be present.

18α-Glycyrrhetinic acid. $C_{30}H_{46}O_4$. (M_r 470.7). *1127900.* [1449-05-4]. (20β)-3β-Hydroxy-11-oxo-18α-olean-12-en-29-oic acid.

White or almost white powder, practically insoluble in water, soluble in anhydrous ethanol, sparingly soluble in methylene chloride.

Glyoxalhydroxyanil. $C_{14}H_{12}N_2O_2$. (M_r 240.3). *1041000.* [1149-16-2]. Glyoxal bis(2-hydroxyanil).

White or almost white crystals, soluble in hot ethanol (96 per cent).

mp: about 200 °C.

Glyoxal solution. *1098400.* [107-22-2].

Contains about 40 per cent (*m/m*) glyoxal.

Assay. In a ground-glass stoppered flask place 1.000 g of glyoxal solution, 20 mL of a 70 g/L solution of *hydroxylamine hydrochloride R* and 50 mL of *water R*. Allow to stand for 30 min and add 1 mL of *methyl red mixed solution R* and titrate with *1 M sodium hydroxide* until the colour changes from red to green. Carry out a blank titration.

1 mL of *1 M sodium hydroxide* is equivalent to 29.02 mg of glyoxal ($C_2H_2O_2$).

Gonadotrophin, chorionic. *1041100.* [9002-61-3].

See *Chorionic gonadotrophin (0498)*.

Gonadotrophin, serum. *1041200.*

See *Equine serum gonadotrophin for veterinary use (0719)*.

Guaiacol. $C_7H_8O_2$. (M_r 124.1). *1148300.* [90-05-1]. 2-Methoxyphenol. 1-Hydroxy-2-methoxybenzene.

Crystalline mass or colourless or yellowish liquid, hygroscopic, slightly soluble in water, very soluble in methylene chloride, freely soluble in ethanol (96 per cent).

bp: about 205 °C.

mp: about 28 °C.

Guaiacum resin. *1041400.*

Resin obtained from the heartwood of *Guaiacum officinale* L. and *Guaiacum sanctum* L.

Reddish-brown or greenish-brown, hard, glassy fragments; fracture shiny.

Guaiazulene. $C_{15}H_{18}$. (M_r 198.3). *1041500.* [489-84-9]. 1,4-Dimethyl-7-isopropylazulene.

Dark-blue crystals or blue liquid, very slightly soluble in water, miscible with fatty and essential oils and with liquid paraffin, sparingly soluble in ethanol (96 per cent), soluble in 500 g/L sulfuric acid and 80 per cent *m/m* phosphoric acid, giving a colourless solution.

mp: about 30 °C.

Storage: protected from light and air.

Guanidine hydrochloride. CH_5N_3HCl. (M_r 95.5). *1098500.* [50-01-1].

Crystalline powder, freely soluble in water and in ethanol (96 per cent).

Guanine. $C_5H_5N_5O$. (M_r 151.1). *1041600.* [73-40-5]. 2-Amino-1,7-dihydro-6*H*-purin-6-one.

Amorphous white or almost white powder, practically insoluble in water, slightly soluble in ethanol (96 per cent). It dissolves in ammonia and in dilute solutions of alkali hydroxides.

Haemoglobin. *1041700.* [9008-02-0].

Nitrogen: 15 per cent to 16 per cent.

Iron: 0.2 per cent to 0.3 per cent.

Loss on drying (*2.2.32*): maximum 2 per cent.

Sulfated ash (*2.4.14*): maximum 1.5 per cent.

Haemoglobin solution. *1041701.*

Transfer 2 g of *haemoglobin R* to a 250 mL beaker and add 75 mL of *dilute hydrochloric acid R2*. Stir until solution is complete. Adjust the pH to 1.6 ± 0.1 using *1 M hydrochloric acid*. Transfer to a 100 mL flask with the aid of *dilute hydrochloric acid R2*. Add 25 mg of *thiomersal R*. Prepare daily, store at 5 ± 3 °C and readjust to pH 1.6 before use.

Storage: at 2 °C to 8 °C.

Harpagoside. $C_{24}H_{30}O_{11}$. (M_r 494.5). *1098600.*

White or almost white, crystalline powder, very hygroscopic, soluble in water and in ethanol (96 per cent).

mp: 117 °C to 121 °C.

Storage: in an airtight container.

Hederacoside C. $C_{59}H_{96}O_{26}$. (M_r 1221). *1158100.* [14216-03-6]. *O*-6-Deoxy-α-L-mannopyranosyl-(1→4)-*O*-β-D-glucopyranosyl-(1→6)-β-D-glucopyranosyl (4*R*)-3β-[[2-*O*(-6-deoxy-α-L-mannopyranosyl)-α-L-arabinopyranosyl]oxy]-23-hydroxyolean-12-en-28-oate.

Colourless crystals or white or almost white powder.

mp: about 220 °C.

Hederacoside C used in liquid chromatography complies with the following additional test.

Assay. Liquid chromatography (*2.2.29*) as prescribed in the monograph *Ivy leaf (2148)*.

Test solution. Dissolve 5.0 mg of hederacoside C in 5.0 mL of *methanol R*.

Content: minimum 95 per cent, calculated by the normalisation procedure.

Hederagenin. $C_{30}H_{48}O_4$. (M_r 472.7). *1184100.* [465-99-6]. Astrantiagenin E. Caulosapogenin. 3β,23-Dihydroxy-4α-olean-12-en-28-oic acid.

α-Hederin. $C_{41}H_{66}O_{12}$. (M_r 751.0). *1158200.* [27013-91-8]. (+)-(4*R*)-3β-[[2-*O*-(6-Deoxy-α-L-mannopyranosyl)-α-L-arabinopyranosyl]oxy]-23-hydroxyolean-12-en-28-oic acid.

White or almost white powder.

mp: about 256 °C.

Helium for chromatography. He. (A_r 4.003). *1041800.* [7440-59-7].

Content: minimum 99.995 per cent *V/V* of He.

Heparin. *1041900.* [9041-08-1].
See *Heparin sodium (0333).*

Heptachlor. $C_{10}H_5Cl_7$. (M_r 373.3). *1128000.* [76-44-8].
bp: about 135 °C.
mp: about 95 °C.
A suitable certified reference solution (10 ng/µL in cyclohexane) may be used.

Heptachlor epoxide. $C_{10}H_5Cl_7O$. (M_r 389.3). *1128100.* [1024-57-3].
bp: about 200 °C.
mp: about 160 °C.
A suitable certified reference solution (10 ng/µL in cyclohexane) may be used.

Heptafluorobutyric acid. $C_4HF_7O_2$. (M_r 214.0). *1162400.* [375-22-4]. HFBA.
Clear, colourless liquid. Corrosive.
d_{20}^{20}: about 1.645.
n_D^{20}: about 1.300.
bp: about 120 °C.
Content: minimum 99.5 per cent.

Heptafluoro-*N*-methyl-*N*-(trimethylsilyl)butanamide. $C_8H_{12}F_7NOSi$. (M_r 299.3). *1139500.* [53296-64-3]. 2,2,3,3,4,4,4-Heptafluoro-*N*-methyl-*N*-(trimethylsilyl)-butyramide.
Clear, colourless liquid, flammable.
n_D^{20}: about 1.351.
bp: about 148 °C.

Heptane. C_7H_{16}. (M_r 100.2). *1042000.* [142-82-5].
Colourless, flammable liquid, practically insoluble in water, miscible with anhydrous ethanol.
d_{20}^{20}: 0.683 to 0.686.
n_D^{20}: 1.387 to 1.388.
Distillation range (*2.2.11*). Not less than 95 per cent distils between 97 °C and 98 °C.

Hesperidin. $C_{28}H_{34}O_{15}$. (M_r 611). *1139000.* [520-26-3]. (*S*)-7-[[6-*O*-(6-Deoxy-α-L-mannopyranosyl)-β-D-glucopyranosyl]oxy]-5-hydroxy-2-(3-hydroxy-4-methoxyphenyl)-2,3-dihydro-4*H*-1-benzopyran-4-one.
Hygroscopic powder, slightly soluble in water and in methanol.
mp: 258 °C to 262 °C.

Hexachlorobenzene. C_6Cl_6. (M_r 284.8). *1128200.* [118-74-1].
bp: about 332 °C.
mp: about 230 °C.
A suitable certified reference solution (10 ng/µL in cyclohexane) may be used.

α-Hexachlorocyclohexane. $C_6H_6Cl_6$. (M_r 290.8). *1128300.* [319-84-6].
bp: about 288 °C.
mp: about 158 °C.
A suitable certified reference solution (10 ng/µL in cyclohexane) may be used.

β-Hexachlorocyclohexane. $C_6H_6Cl_6$. (M_r 290.8). *1128400.* [319-85-7].
A suitable certified reference solution (10 ng/µL in cyclohexane) may be used.

δ-Hexachlorocyclohexane. $C_6H_6Cl_6$. (M_r 290.8). *1128500.* [319-86-8].
A suitable certified reference solution (10 ng/µL in cyclohexane) may be used.

Hexacosane. $C_{26}H_{54}$. (M_r 366.7). *1042200.* [630-01-3].
Colourless or white or almost white flakes.
mp: about 57 °C.

Hexadimethrine bromide. $(C_{13}H_{30}Br_2N_2)_n$. *1042300.* [28728-55-4]. 1,5-Dimethyl-1,5-diazaundecamethylene polymethobromide. Poly(1,1,5,5-tetramethyl-1,5-azonia-undecamethylene dibromide).
White or almost white, amorphous powder, hygroscopic, soluble in water.
Storage: in an airtight container.

2,2′,2″,6,6′,6″-Hexa(1,1-dimethylethyl)-4,4′,4″-[(2,4,6-trimethyl-1,3,5-benzenetriyl)trismethylene]triphenol. $C_{54}H_{78}O_3$. (M_r 775). *1042100.* 2,2′,2″,6,6′,6″-Hexa-*tert*-butyl-4,4′,4″-[(2,4,6-trimethyl-1,3,5-benzenetriyl)trismethylene]triphenol.
Crystalline powder, practically insoluble in water, soluble in acetone, slightly soluble in ethanol (96 per cent).
mp: about 244 °C.

1,1,1,3,3,3-Hexafluoropropan-2-ol. $C_3H_2F_6O$. (M_r 168.0). *1136000.* [920-66-1].
Content: minimum 99.0 per cent, determined by gas chromatography.
Clear, colourless liquid, miscible with water and with anhydrous ethanol.
d_{20}^{20}: about 1.596.
bp: about 59 °C.

Hexamethyldisilazane. $C_6H_{19}NSi_2$. (M_r 161.4). *1042400.* [999-97-3].
Clear, colourless liquid.
d_{20}^{20}: about 0.78.
n_D^{20}: about 1.408.
bp: about 125 °C.
Storage: in an airtight container.

Hexamethylenetetramine. $C_6H_{12}N_4$. (M_r 140.2). *1042500.* [100-97-0]. Hexamine. 1,3,5,7-Tetraazatricyclo[3.3.1.1^{3,7}]-decane.
Colourless, crystalline powder, very soluble in water.

Hexane. C_6H_{14}. (M_r 86.2). *1042600.* [110-54-3].
Colourless, flammable liquid, practically insoluble in water, miscible with anhydrous ethanol.
d_{20}^{20}: 0.659 to 0.663.
n_D^{20}: 1.375 to 1.376.
Distillation range (*2.2.11*). Not less than 95 per cent distils between 67 °C and 69 °C.
Hexane used in spectrophotometry complies with the following additional test.
Minimum transmittance (*2.2.25*) using *water R* as compensation liquid: 97 per cent from 260 nm to 420 nm.

Hexylamine. $C_6H_{15}N$. (M_r 101.2). *1042700.* [111-26-2]. Hexan-1-amine.
Colourless liquid, slightly soluble in water, soluble in ethanol (96 per cent).
d_{20}^{20}: about 0.766.
n_D^{20}: about 1.418.
bp: 127 °C to 131 °C.

Histamine dihydrochloride. *1042800.* [56-92-8].
See *Histamine dihydrochloride (0143).*

Histamine solution. *1042901.*
A 9 g/L solution of *sodium chloride R* containing 0.1 µg per millilitre of histamine base (as the phosphate or dihydrochloride).

Histidine monohydrochloride. $C_6H_{10}ClN_3O_2,H_2O$. (M_r 209.6). *1043000.* [123333-71-1]. (*RS*)-2-Amino-3-(imidazol-4-yl)propionic acid hydrochloride monohydrate.

Crystalline powder or colourless crystals, soluble in water.

mp: about 250 °C, with decomposition.

Chromatography. Thin-layer chromatography (*2.2.27*) as prescribed in the monograph *Histamine dihydrochloride (0143)*; the chromatogram shows only one principal spot.

Holmium oxide. Ho_2O_3. (M_r 377.9). *1043100.* [12055-62-8]. Diholmium trioxide.

Yellowish powder, practically insoluble in water.

Holmium perchlorate solution. *1043101.*

A 40 g/L solution of *holmium oxide R* in a solution of *perchloric acid R* containing 141 g/L of $HClO_4$.

DL-**Homocysteine.** $C_4H_9NO_2S$. (M_r 135.2). *1136100.* [454-29-5]. (2*RS*)-2-Amino-4-sulfanylbutanoic acid.

White or almost white, crystalline powder.

mp: about 232 °C.

L-**Homocysteine thiolactone hydrochloride.** C_4H_8ClNOS. (M_r 153.6). *1136200.* [31828-68-9]. (3*S*)-3-Aminodihydrothiophen-2(3*H*)-one hydrochloride.

White or almost white, crystalline powder.

mp: about 202 °C.

Honokiol. $C_{18}H_{18}O_2$. (M_r 266.3). *1182700.* [35354-74-6]. 3′,5-Di(prop-2-enyl)biphenyl-2,4′-diol. 3′,5-Diallyl-2,4′-dihydroxybiphenyl. 3′,5-Di-2-propenyl-[1,1′-biphenyl]-2,4′-diol.

Human tissue factor solution. *1186100.*

Solution containing human tissue factor, which may be produced by recombinant DNA technology, combined with phospholipids and calcium buffers. Suitable stabilisers may be added.

Hyaluronidase diluent. *1043300.*

Mix 100 mL of *phosphate buffer solution pH 6.4 R* with 100 mL of *water R*. Dissolve 0.140 g of *hydrolysed gelatin R* in the solution at 37 °C.

Storage: use within 2 h.

Hydrastine hydrochloride. $C_{21}H_{22}ClNO_6$. (M_r 419.9). *1154000.* [5936-28-7]. (3*S*)-6,7-Dimethoxy-3-[(5*R*)-6-methyl-5,6,7,8-tetrahydro-1,3-dioxolo[4,5-*g*]isoquinolin-5-yl]isobenzofuran-1(3*H*)-one hydrochloride.

White or almost white powder, hygroscopic, very soluble in water and in ethanol (96 per cent).

$[\alpha]_D^{17}$: about + 127.

mp: about 116 °C.

Hydrastine hydrochloride used in liquid chromatography complies with the following additional test.

Assay. Liquid chromatography (*2.2.29*) as prescribed in the monograph *Goldenseal rhizome (1831)*.

Content: minimum 98 per cent, calculated by the normalisation procedure.

Hydrazine. H_4N_2. (M_r 32.05). *1136300.* [302-01-2]. Diazane.

Slightly oily liquid, colourless, with a strong odour of ammonia, miscible with water. Dilute solutions in water are commercially available.

n_D^{20}: about 1.470.

bp: about 113 °C.

mp: about 1.5 °C.

Caution: toxic and corrosive.

Hydrazine sulfate. $H_6N_2O_4S$. (M_r 130.1). *1043400.* [10034-93-2].

Colourless crystals, sparingly soluble in cold water, soluble in hot water (50 °C) and freely soluble in boiling water, practically insoluble in ethanol (96 per cent).

Arsenic (*2.4.2, Method A*): maximum 1 ppm, determined on 1.0 g.

Sulfated ash (*2.4.14*): maximum 0.1 per cent.

Hydriodic acid. HI. (M_r 127.9). *1098900.* [10034-85-2].

Prepare by distilling hydriodic acid over red phosphorus, passing *carbon dioxide R* or *nitrogen R* through the apparatus during the distillation. Use the colourless or almost colourless, constant-boiling mixture (55 per cent to 58 per cent of HI) distilling between 126 °C and 127 °C.

Place the acid in small, amber, glass-stoppered bottles previously flushed with *carbon dioxide R* or *nitrogen R*, seal with paraffin.

Storage: in a dark place.

Hydrobromic acid, 30 per cent. *1098700.* [10035-10-6].

A 30 per cent solution of hydrobromic acid in *glacial acetic acid R*.

Degas with caution the contents before opening.

Hydrobromic acid, dilute. *1098701.*

Place 5.0 mL of *30 per cent hydrobromic acid R* in amber vials equipped with polyethylene stoppers. Seal under *argon R* and store in the dark. Add 5.0 mL of *glacial acetic acid R* immediately before use. Shake.

Storage: in the dark.

Hydrobromic acid, 47 per cent. *1118900.*

A 47 per cent *m/m* solution of hydrobromic acid.

Hydrobromic acid, dilute R1. *1118901.*

Contains 7,9 g/L of HBr.

Dissolve 16.81 g of *47 per cent hydrobromic acid R* in *water R* and dilute to 1000 mL with the same solvent.

Hydrochloric acid. *1043500.* [7647-01-0].

See *Concentrated hydrochloric acid (0002)*.

2 M Hydrochloric acid. *3001700.*

Dilute 206.0 g of *hydrochloric acid R* to 1000.0 mL with *water R*.

3 M Hydrochloric acid. *3001600.*

Dilute 309.0 g of *hydrochloric acid R* to 1000.0 mL with *water R*.

6 M Hydrochloric acid. *3001500.*

Dilute 618.0 g of *hydrochloric acid R* to 1000.0 mL with *water R*.

Hydrochloric acid R1. *1043501.*

Contains 250 g/L of HCl.

Dilute 70 g of *hydrochloric acid R* to 100 mL with *water R*.

Hydrochloric acid, brominated. *1043507.*

To 1 mL of *bromine solution R* add 100 mL of *hydrochloric acid R*.

Hydrochloric acid, dilute. *1043503.*

Contains 73 g/L of HCl.

Dilute 20 g of *hydrochloric acid R* to 100 mL with *water R*.

Hydrochloric acid, dilute, heavy metal-free. *1043509.*

Complies with the requirements prescribed for *dilute hydrochloric acid R* with the following maximum contents of heavy metals.

As: 0.005 ppm.

Cd: 0.003 ppm.

Cu: 0.003 ppm.
Fe: 0.05 ppm.
Hg: 0.005 ppm.
Ni: 0.004 ppm.
Pb: 0.001 ppm.
Zn: 0.005 ppm.

Hydrochloric acid, dilute R1. *1043504.*
Contains 0.37 g/L of HCl.
Dilute 1.0 mL of *dilute hydrochloric acid R* to 200.0 mL with *water R*.

Hydrochloric acid, dilute R2. *1043505.*
Dilute 30 mL of *1 M hydrochloric acid* to 1000 mL with *water R*; adjust to pH 1.6 ± 0.1.

Hydrochloric acid, ethanolic. *1043506.*
Dilute 5.0 mL of *1 M hydrochloric acid* to 500.0 mL with *ethanol (96 per cent) R*.

Hydrochloric acid, heavy metal-free. *1043510.*
Complies with the requirements prescribed for *hydrochloric acid R* with the following maximum contents of heavy metals.
As: 0.005 ppm.
Cd: 0.003 ppm.
Cu: 0.003 ppm.
Fe: 0.05 ppm.
Hg: 0.005 ppm.
Ni: 0.004 ppm.
Pb: 0.001 ppm.
Zn: 0.005 ppm.

Hydrochloric acid, lead-free. *1043508.*
Complies with the requirements prescribed for *hydrochloric acid R* with the following additional requirement.
Lead: maximum 20 ppb.
Atomic emission spectrometry (*2.2.22, Method I*).
Test solution. In a quartz crucible evaporate 200 g of the acid to be examined almost to dryness. Take up the residue in 5 mL of nitric acid prepared by sub-boiling distillation of *nitric acid R* and evaporate to dryness. Take up the residue in 5 mL of nitric acid prepared by sub-boiling distillation of *nitric acid R*.
Reference solutions. Prepare the reference solutions using *lead standard solution (0.1 ppm Pb) R* diluted with nitric acid prepared by sub-boiling distillation of *nitric acid R*.
Wavelength: 220.35 nm.

Hydrochloric acid, methanolic. *1043511.*
Dilute 4.0 mL of *hydrochloric acid R* to 1000.0 mL with *methanol R2*.

Hydrocortisone acetate. *1098800.* [50-03-3].
See *Hydrocortisone acetate (0334)*.

Hydrofluoric acid. HF. (M_r 20.01). *1043600.* [7664-39-3].
Content: minimum 40.0 per cent *m/m*.
Clear, colourless liquid.
Loss on ignition: not more than 0.05 per cent *m/m*; evaporate the hydrofluoric acid in a platinum crucible and gently ignite the residue to constant mass.
Assay. Weigh accurately a glass-stoppered flask containing 50.0 mL of *1 M sodium hydroxide*. Introduce 2 g of the hydrofluoric acid and weigh again. Titrate the solution with *0.5 M sulfuric acid*, using 0.5 mL of *phenolphthalein solution R* as indicator.
1 mL of *1 M sodium hydroxide* is equivalent to 20.01 mg of HF.
Storage: in a polyethylene container.

Hydrogen for chromatography. H_2. (M_r 2.016). *1043700.* [1333-74-0].
Content: minimum 99.95 per cent *V/V*.

Hydrogen peroxide solution, dilute. *1043800.* [7722-84-1].
See *Hydrogen peroxide solution (3 per cent) (0395)*.

Hydrogen peroxide solution, strong. *1043900.* [7722-84-1].
See *Hydrogen peroxide solution (30 per cent) (0396)*.

Hydrogen sulfide. H_2S. (M_r 34.08). *1044000.* [7783-06-4].
Gas, slightly soluble in water.

Hydrogen sulfide solution. *1136400.*
A recently prepared solution of *hydrogen sulfide R* in *water R*. The saturated solution contains about 0.4 per cent to 0.5 per cent of H_2S at 20 °C.

Hydrogen sulfide R1. H_2S. (M_r 34.08). *1106600.* [7783-06-4].
Content: minimum 99.7 per cent *V/V*.

Hydroquinone. $C_6H_6O_2$. (M_r 110.1). *1044100.* [123-31-9]. Benzene-1,4-diol.
Fine, colourless or white or almost white needles, darkening on exposure to air and light, soluble in water and in ethanol (96 per cent).
mp: about 173 °C.
Storage: protected from light and air.

Hydroquinone solution. *1044101.*
Dissolve 0.5 g of *hydroquinone R* in *water R*, add 20 µL of *sulfuric acid R* and dilute to 50 mL with *water R*.

2-Hydroxybenzimidazole. $C_7H_6N_2O$. (M_r 134.1). *1169600.* [615-16-7]. 1*H*-benzimidazol-2-ol.

4-Hydroxybenzohydrazide. $C_7H_8N_2O_2$. (M_r 152.2). *1145900.* [5351-23-5]. *p*-Hydroxybenzohydrazide.

4-Hydroxybenzoic acid. $C_7H_6O_3$. (M_r 138.1). *1106700.* [99-96-7].
Crystals, slightly soluble in water, very soluble in ethanol (96 per cent), soluble in acetone.
mp: 214 °C to 215 °C.

4-Hydroxycoumarin. $C_9H_6O_3$. (M_r 162.2). *1169700.* [1076-38-6]. 4-Hydroxy-2*H*-1-benzopyran-2-one.
White or almost white powder, freely soluble in methanol.
Content: minimum 98.0 per cent.

6-Hydroxydopa. $C_9H_{11}NO_5$. (M_r 213.2). *1169800.* [21373-30-8]. (2*RS*)-2-Amino-3-(2,4,5-trihydroxyphenyl)-propanoic acid. 2,5-Dihydroxy-DL-tyrosine.
mp: about 257 °C.

2-[4-(2-Hydroxyethyl)piperazin-1-yl]ethanesulfonic acid. $C_8H_{18}N_2O_4S$. (M_r 238.3). *1106800.* [7365-45-9]. HEPES.
White or almost white powder.
mp: about 236 °C, with decomposition

4-Hydroxyisophthalic acid. $C_8H_6O_5$. (M_r 182.1). *1106900.* [636-46-4]. 4-Hydroxybenzene-1,3-dicarboxylic acid.
Needles or platelets, very slightly soluble in water, freely soluble in ethanol (96 per cent).
mp: about 314 °C, with decomposition.

Hydroxylamine hydrochloride. NH_4ClO. (M_r 69.5). *1044300.* [5470-11-1].
White or almost white, crystalline powder, very soluble in water, soluble in ethanol (96 per cent).

Hydroxylamine hydrochloride solution R2. *1044304.*
Dissolve 2.5 g of *hydroxylamine hydrochloride R* in 4.5 mL of hot *water R* and add 40 mL of *ethanol (96 per cent) R* and 0.4 mL of *bromophenol blue solution R2*. Add *0.5 M*

alcoholic potassium hydroxide until a greenish-yellow colour is obtained. Dilute to 50.0 mL with *ethanol (96 per cent) R*.

Hydroxylamine solution, alcoholic. *1044301.*

Dissolve 3.5 g of *hydroxylamine hydrochloride R* in 95 mL of *ethanol (60 per cent V/V) R*, add 0.5 mL of a 2 g/L solution of *methyl orange R* in *ethanol (60 per cent V/V) R* and sufficient *0.5 M potassium hydroxide in alcohol (60 per cent V/V)* to give a pure yellow colour. Dilute to 100 mL with *ethanol (60 per cent V/V) R*.

Hydroxylamine solution, alkaline. *1044302.*

Immediately before use, mix equal volumes of a 139 g/L solution of *hydroxylamine hydrochloride R* and a 150 g/L solution of *sodium hydroxide R*.

Hydroxylamine solution, alkaline R1. *1044303.*

Solution A. Dissolve 12.5 g of *hydroxylamine hydrochloride R* in *methanol R* and dilute to 100 mL with the same solvent.

Solution B. Dissolve 12.5 g of *sodium hydroxide R* in *methanol R* and dilute to 100 mL with the same solvent.

Mix equal volumes of solution A and solution B immediately before use.

Hydroxymethylfurfural. $C_6H_6O_3$. (M_r 126.1). *1044400.* [67-47-0]. 5-Hydroxymethylfurfural.

Acicular crystals, freely soluble in water, in acetone and in ethanol (96 per cent).

mp: about 32 °C.

Hydroxynaphthol blue, sodium salt. $C_{20}H_{11}N_2Na_3O_{11}S_3$. ($M_r$ 620). *1044500.* [63451-35-4]. Trisodium 2,2′-dihydroxy-1,1′-azonaphthalene-3′,4,6′-trisulfonate.

2-Hydroxypropylbetadex for chromatography R. *1146000.* Betacyclodextrin modified by the bonding of (*R*) or (*RS*) propylene oxide groups on the hydroxyl groups.

Hydroxypropyl-β-cyclodextrin. *1128600.* [94035-02-6].

See *Hydroxypropylbetadex (1804)*.

pH (*2.2.3*): 5.0 to 7.5 for a 20 g/L solution.

Hydroxyquinoline. C_9H_7NO. (M_r 145.2). *1044600.* [148-24-3]. 8-Hydroxyquinoline. Quinolin-8-ol.

White or slightly yellowish, crystalline powder, slightly soluble in water, freely soluble in acetone, in ethanol (96 per cent) and in dilute mineral acids.

mp: about 75 °C.

Sulfated ash (*2.4.14*): maximum 0.05 per cent.

12-Hydroxystearic acid. $C_{18}H_{36}O_3$. (M_r 300.5). *1099000.* [106-14-9]. 12-Hydroxyoctadecanoic acid.

White or almost white powder.

mp: 71 °C to 74 °C.

5-Hydroxyuracil. $C_4H_4N_2O_3$. (M_r 128.1). *1044700.* [496-76-4]. Isobarbituric acid. Pyrimidine-2,4,5-triol.

White or almost white, crystalline powder.

mp: about 310 °C, with decomposition.

Chromatography. Thin-layer chromatography (*2.2.27*) as prescribed in the monograph *Fluorouracil (0611)*; the chromatogram shows a principal spot with an R_F of about 0.3.

Storage: in an airtight container.

Hyoscine hydrobromide. *1044800.* [6533-68-2].

See *Hyoscine hydrobromide (0106)*.

Hyoscyamine sulfate. *1044900.* [620-61-1].

See *Hyoscyamine sulfate (0501)*.

Hypericin. $C_{30}H_{16}O_8$. (M_r 504.4). *1149800.* [548-04-9]. 1,3,4,6,8,13-Hexahydroxy-10,11-dimethylphenanthro[1,10,9,8-*opqra*]perylene-7,14-dione.

Content: minimum 85 per cent.

Hyperoside. $C_{21}H_{20}O_{12}$. (M_r 464.4). *1045000.* 2-(3,4-Dihydroxyphenyl)-3-β-D-galactopyranosyloxy-5,7-dihydroxychromen-4-one.

Faint yellow needles, soluble in methanol.

mp: about 240 °C, with decomposition.

Absorbance (*2.2.25*). A solution in *methanol R* shows 2 absorption maxima at 259 nm and at 364 nm.

Hypophosphorous reagent. *1045200.*

Dissolve with the aid of gentle heat, 10 g of *sodium hypophosphite R* in 20 mL of *water R* and dilute to 100 mL with *hydrochloric acid R*. Allow to settle and decant or filter through glass wool.

Hypoxanthine. $C_5H_4N_4O$. (M_r 136.1). *1045300.* [68-94-0]. 1*H*-Purin-6-one.

White or almost white, crystalline powder, very slightly soluble in water, sparingly soluble in boiling water, soluble in dilute acids and in dilute alkali hydroxide solutions, decomposes without melting at about 150 °C.

Chromatography. Thin-layer chromatography (*2.2.27*) as prescribed in the monograph *Mercaptopurine (0096)*; the chromatogram shows only one principal spot.

Imidazole. $C_3H_4N_2$. (M_r 68.1). *1045400.* [288-32-4].

White or almost white, crystalline powder, soluble in water and in ethanol (96 per cent).

mp: about 90 °C.

Iminodibenzyl. $C_{14}H_{13}N$. (M_r 195.3). *1045500.* [494-19-9]. 10,11-Dihydrodibenz[*b*,*f*]azepine.

Pale yellow, crystalline powder, practically insoluble in water, freely soluble in acetone.

mp: about 106 °C.

Imperatorin. $C_{16}H_{14}O_4$. (M_r 270.3). *1180200.* [482-44-0]. 9-[(3-Methylbut-2-enyl)oxy]-7*H*-furo[3,2-*g*][1]benzopyran-7-one.

2-Indanamine hydrochloride. $C_9H_{12}ClN$. (M_r 169.7). *1175800.* [2338-18-3]. 2-Aminoindane hydrochloride.

2,3-Dihydro-1*H*-inden-2-amine hydrochloride.

Indigo carmine. $C_{16}H_8N_2Na_2O_8S_2$. (M_r 466.3). *1045600.* [860-22-0].

Schultz No. 1309.

Colour Index No. 73015.
3,3′-Dioxo-2,2′-bisindolylidene-5,5′-disulfonate disodium.
E 132.

It usually contains sodium chloride.

Blue or violet-blue powder or blue granules with a coppery lustre, sparingly soluble in water, practically insoluble in ethanol (96 per cent). It is precipitated from an aqueous solution by sodium chloride.

Indigo carmine solution. *1045601.*

To a mixture of 10 mL of *hydrochloric acid R* and 990 mL of 200 g/L *nitrogen-free sulfuric acid R* add 0.2 g of *indigo carmine R*.

The solution complies with the following test: add 10 mL to a solution of 1.0 mg of *potassium nitrate R* in 10 mL of *water R*, rapidly add 20 mL of *nitrogen-free sulfuric acid R* and heat to boiling. The blue colour is discharged within 1 min.

Indigo carmine solution R1. *1045602.*

Dissolve 4 g of *indigo carmine R* in about 900 mL of *water R* added in several portions. Add 2 mL of *sulfuric acid R* and dilute to 1000 mL with *water R*.

Assay. Place in a 100 mL conical flask with a wide neck 10.0 mL of *nitrate standard solution (100 ppm NO_3) R*, 10 mL of *water R*, 0.05 mL of the *indigo carmine solution R1*, and then in a single addition, but with caution, 30 mL of *sulfuric acid R*. Titrate the solution immediately, using the *indigo carmine solution R1*, until a stable blue colour is obtained.

The number of millilitres used, *n*, is equivalent to 1 mg of NO_3.

Indometacin. *1101500.* [53-86-1].

See *Indometacin (0092)*.

Inosine. $C_{10}H_{12}N_4O_5$. (M_r 268.2). *1169900.* [58-63-9]. 9-β-D-Ribofuranosylhypoxanthine. 9-β-D-Ribofuranosyl-1,9-dihydro-6*H*-purin-6-one.

mp: 222 °C to 226 °C.

***myo*-Inositol.** *1161100.*

See *myo-Inositol (1805)*.

Iodine. *1045800.* [7553-56-2].

See *Iodine (0031)*.

Iodine solution R1. *1045801.*

To 10.0 mL of *0.05 M iodine* add 0.6 g of *potassium iodide R* and dilute to 100.0 mL with *water R*. Prepare immediately before use.

Iodine solution R2. *1045802.*

To 10.0 mL of *0.05 M iodine* add 0.6 g of *potassium iodide R* and dilute to 1000.0 mL with *water R*. Prepare immediately before use.

Iodine solution R3. *1045803.*

Dilute 2.0 mL of *iodine solution R1* to 100.0 mL with *water R*. Prepare immediately before use.

Iodine solution R4. *1045806.*

Dissolve 14 g of *iodine R* in 100 mL of a 400 g/L solution of *potassium iodide R*, add 1 mL of *dilute hydrochloric acid R* and dilute to 1000 mL with *water R*.

Storage: protected from light.

Iodine solution, alcoholic. *1045804.*

A 10 g/L solution in *ethanol (96 per cent) R*.

Storage: protected from light.

Iodine solution, chloroformic. *1045805.*

A 5 g/L solution in *chloroform R*.

Storage: protected from light.

Iodine-123 and ruthenium-106 spiking solution. *1166700.*

Prepare immediately before use. Mix 3.5 mL of an 18.5 kBq/mL solution of ruthenium-106 in the form of ruthenium trichloride in a mixture of equal volumes of *glacial acetic acid R* and *water R* with 200 µL of a 75 kBq/mL solution of iodine-123 in the form of sodium iodide in *water R*.

Iodine bromide. IBr. (M_r 206.8). *1045900.* [7789-33-5].

Bluish-black or brownish-black crystals, freely soluble in water, in ethanol (96 per cent) and in glacial acetic acid.

bp: about 116 °C.

mp: about 40 °C.

Storage: protected from light.

Iodine bromide solution. *1045901.*

Dissolve 20 g of *iodine bromide R* in *glacial acetic acid R* and dilute to 1000 mL with the same solvent.

Storage: protected from light.

Iodine chloride. ICl. (M_r 162.4). *1143000.* [7790-99-0].

Black crystals, soluble in water, in acetic acid and in ethanol (96 per cent).

bp: about 97.4 °C.

Iodine chloride solution. *1143001.*

Dissolve 1.4 g of *iodine chloride R* in *glacial acetic acid R* and dilute to 100 mL with the same acid.

Storage: protected from light.

Iodine pentoxide, recrystallised. I_2O_5. (M_r 333.8). *1046000.* [12029-98-0]. Di-iodine pentoxide. Iodic anhydride.

Content: minimum 99.5 per cent.

White or almost white, crystalline powder, or white or greyish-white granules, hygroscopic, very soluble in water forming HIO_3.

Stability on heating. Dissolve 2 g, previously heated for 1 h at 200 °C, in 50 mL of *water R*. A colourless solution is obtained.

Assay. Dissolve 0.100 g in 50 mL of *water R*, add 3 g of *potassium iodide R* and 10 mL of *dilute hydrochloric acid R*. Titrate the liberated iodine with *0.1 M sodium thiosulfate*, using 1 mL of *starch solution R* as indicator.

1 mL of *0.1 M sodium thiosulfate* is equivalent to 2.782 mg of I_2O_5.

Storage: in an airtight container, protected from light.

Iodoacetamide. C_2H_4INO. (M_r 185.0). *1186200.* [144-48-9]. 2-Iodoacetamide.

Slightly yellow, crystalline powder, soluble in water.

mp: about 92 °C.

Iodoacetic acid. $C_2H_3IO_2$. (M_r 185.9). *1107000.* [64-69-7].

Colourless or white or almost white crystals, soluble in water and in ethanol (96 per cent).

mp: 82 °C to 83 °C.

2-Iodobenzoic acid. $C_7H_5IO_2$. (M_r 248.0). *1046100.* [88-67-5].

White or slightly yellow, crystalline powder, slightly soluble in water, soluble in ethanol (96 per cent).

mp: about 160 °C.

Chromatography. Thin-layer chromatography (*2.2.27*), using cellulose for chromatography f_{254} R as the coating substance: apply to the plate 20 µL of a solution of the 2-iodobenzoic acid, prepared by dissolving 40 mg in 4 mL of *0.1 M sodium hydroxide* and diluting to 10 mL with *water R*. Develop over a path of about 12 cm using as the mobile phase the upper layer obtained by shaking together 20 volumes of *water R*, 40 volumes of *glacial acetic acid R* and 40 volumes of *toluene R*. Allow the plate to dry in air and examine in ultraviolet light at 254 nm. The chromatogram shows only one principal spot.

3-Iodobenzylammonium chloride. C_7H_9ClIN. (M_r 269.5). *1168000.* [3718-88-5]. 1-(3-Iodophenyl)methanamine hydrochloride. 1-(3-Iodophenyl)methanaminium chloride. *m*-Iodobenzylamine hydrochloride.

White or almost white crystals.

mp: 188 °C to 190 °C.

Iodoethane. C_2H_5I. (M_r 155.9). *1099100.* [75-03-6].

Colourless or slightly yellowish liquid, darkening on exposure to air and light, miscible with ethanol (96 per cent) and most organic solvents.

d_{20}^{20}: about 1.95.

n_D^{20}: about 1.513.

bp: about 72 °C.

Storage: in an airtight container.

2-Iodohippuric acid. $C_9H_8INO_3,2H_2O$. (M_r 341.1). *1046200.* [147-58-0]. 2-(2-Iodobenzamido)acetic acid.

White or almost white, crystalline powder, sparingly soluble in water.

mp: about 170 °C.

Water (*2.5.12*): 9 per cent to 13 per cent, determined on 1.000 g.

Chromatography. Thin-layer chromatography (*2.2.27*), using *cellulose for chromatography F_{254} R* as the coating substance: apply to the plate 20 µL of a solution of the 2-iodohippuric acid, prepared by dissolving 40 mg in 4 mL of *0.1 M sodium hydroxide* and diluting to 10 mL with *water R*. Develop over a path of about 12 cm using as the mobile phase the upper layer obtained by shaking together 20 volumes of *water R*, 40 volumes of *glacial acetic acid R* and 40 volumes of *toluene R*. Allow the plate to dry in air and examine in ultraviolet light at 254 nm. The chromatogram shows only one principal spot.

Iodoplatinate reagent. *1046300.*

To 3 mL of a 100 g/L solution of *chloroplatinic acid R* add 97 mL of *water R* and 100 mL of a 60 g/L solution of *potassium iodide R*.

Storage: protected from light.

Iodoplatinate reagent R1. *1172200.*

Mix 2.5 mL of a 50 g/L solution of *chloroplatinic acid R*, 22.5 mL of a 100 g/L solution of *potassium iodide R* and 50 mL of *water R*.

Storage: protected from light, at a temperature of 2-8 °C.

Iodosulfurous reagent. *1046400.*

The apparatus, which must be kept closed and dry during the preparation, consists of a 3000 mL to 4000 mL round-bottomed flask with three inlets for a stirrer and a thermometer and fitted with a drying tube. To 700 mL of *anhydrous pyridine R* and 700 mL of *ethylene glycol monomethyl ether R* add, with constant stirring, 220 g of finely powdered *iodine R*, previously dried over *diphosphorus pentoxide R*. Continue stirring until the iodine has completely dissolved (about 30 min). Cool to – 10 °C, and add quickly, still stirring, 190 g of *sulfur dioxide R*. Do not allow the temperature to exceed 30 °C. Cool.

Assay. Add about 20 mL of *anhydrous methanol R* to a titration vessel and titrate to the end-point with the iodosulfurous reagent (*2.5.12*). Introduce in an appropriate form a suitable amount of *water R*, accurately weighed, and repeat the determination of water. Calculate the water equivalent in milligrams per millilitre of iodosulfurous reagent.

The minimum water equivalent is 3.5 mg of water per millilitre of reagent.

Work protected from humidity. Standardise immediately before use.

Storage: in a dry container.

5-Iodouracil. $C_4H_3IN_2O_2$. (M_r 238.0). *1046500.* [696-07-1]. 5-Iodo-1*H*,3*H*-pyrimidine-2,4-dione.

mp: about 276 °C, with decomposition.

Chromatography. Thin-layer chromatography (*2.2.27*) as prescribed in the monograph *Idoxuridine (0669)*: apply 5 µL of a 0.25 g/L solution; the chromatogram obtained shows only one principal spot.

Ion-exclusion resin for chromatography. *1131000.*

A resin with sulfonic acid groups attached to a polymer lattice consisting of polystyrene cross-linked with divinylbenzene.

Ion-exchange resin, strongly acidic. *1085400.*

Resin in protonated form with sulfonic acid groups attached to a lattice consisting of polystyrene cross-linked with 8 per cent of divinylbenzene. It is available as spherical beads; unless otherwise prescribed, the particle size is 0.3 mm to 1.2 mm.

Capacity. 4.5 mmol to 5 mmol per gram, with a water content of 50 per cent to 60 per cent.

Preparation of a column. Unless otherwise prescribed, use a tube with a fused-in sintered glass disc having a length of 400 mm, an internal diameter of 20 mm and a filling height of about 200 mm. Introduce the resin, mixing it with *water R* and pouring the slurry into the tube, ensuring that no air bubbles are trapped between the particles. When in use, the liquid must not be allowed to fall below the surface of the resin. If the resin is in its protonated form, wash with *water R* until 50 mL requires not more than 0.05 mL of *0.1 M sodium hydroxide* for neutralisation, using 0.1 mL of *methyl orange solution R* as indicator.

If the resin is in its sodium form or if it requires regeneration, pass about 100 mL of a mixture of equal volumes of *hydrochloric acid R1* and *water R* slowly through the column and then wash with *water R* as described above.

Irisflorentin. $C_{20}H_{18}O_8$. (M_r 386.4). *1186300.* [41743-73-1]. 9-Methoxy-7-(3,4,5-trimethoxyphenyl)-8*H*-1,3-dioxolo-[4,5-*g*][1]benzopyran-8-one.

Iron. Fe. (A_r 55.85). *1046600.* [7439-89-6].

Grey powder or wire, soluble in dilute mineral acids.

Iron salicylate solution. *1046700.*

Dissolve 0.1 g of *ferric ammonium sulfate R* in a mixture of 2 mL of *dilute sulfuric acid R* and 48 mL of *water R* and dilute to 100 mL with *water R*. Add 50 mL of a 11.5 g/L solution of *sodium salicylate R*, 10 mL of *dilute acetic acid R*, 80 mL of a 136 g/L solution of *sodium acetate R* and dilute to 500 mL with *water R*. The solution should be recently prepared.

Storage: in an airtight container, protected from light.

Isatin. $C_8H_5NO_2$. (M_r 147.1). *1046800.* [91-56-5]. Indoline-2,3-dione.

Small, yellowish-red crystals, slightly soluble in water, soluble in hot water and in ethanol (96 per cent), soluble in solutions of alkali hydroxides giving a violet colour becoming yellow on standing.

mp: about 200 °C, with partial sublimation.

Sulfated ash (*2.4.14*): maximum 0.2 per cent.

Isatin reagent. *1046801.*

Dissolve 6 mg of *ferric sulfate R* in 8 mL of *water R* and add cautiously 50 mL of *sulfuric acid R*. Add 6 mg of *isatin R* and stir until dissolved.

The reagent should be pale yellow, but not orange or red.

Isoamyl alcohol. $C_5H_{12}O$. (M_r 88.1). *1046900.* [123-51-3]. 3-Methylbutan-1-ol.

Colourless liquid, slightly soluble in water, miscible with ethanol (96 per cent).

bp: about 130 °C.

Isoamyl benzoate. $C_{12}H_{16}O_2$. (M_r 192.3). *1164200.* [94-46-2]. Isopentyl benzoate. 3-Methylbutyl benzoate.

n_D^{20}: about 1.494.

bp: about 261 °C.

Colourless or pale yellow liquid.

Isoandrosterone. $C_{19}H_{30}O_2$. (M_r 290.4). *1107100.* [481-29-8]. Epiandrosterone. 3β-Hydroxy-5α-androstan-17-one.

White or almost white powder, practically insoluble in water, soluble in organic solvents.

$[\alpha]_D^{20}$: + 88, determined on 20 g/L solution in *methanol R*.

mp: 172 °C to 174 °C.

ΔA (*2.2.41*): 14.24 × 10^3, determined at 304 nm on a 1.25 g/L solution.

***N*-Isobutyldodecatetraenamide.** $C_{16}H_{25}NO$. (M_r 247.4). *1159500.* [866602-52-0]. (2*E*,4*E*,8*Z*,10*EZ*)-*N*-2-(Methylpropyl)dodeca-2,4,8,10-tetraenamide.

White or almost white or non-coloured crystals.

mp: about 70 °C.

***N*-Isobutyldodecatetraenamide solution.** *1159501.*

A solution of *N-isobutyldodecatetraenamide R*, exactly weighed, in *methanol R* at a concentration of about 10 mg/mL.

Isodrin. $C_{12}H_8Cl_6$. (M_r 364.9). *1128700.* [465-73-6]. 1,2,3,4,10,10-Hexachloro-1,4,4a,5,8,8a-hexahydro-*endo,endo*-1,4:5,8-dimethanonaphthalene.

Practically insoluble in water, soluble in common organic solvents such as acetone.

A suitable certified reference solution may be used.

Isoleucine. *1185000.* [73-32-5].

See *Isoleucine (0770).*

Isomalt. $C_{12}H_{24}O_{11}$. (M_r 344.3). *1164300.* [64519-82-0].

Mixture of 6-*O*-α-D-glucopyranosyl-D-glucitol and of 1-*O*-α-D-glucopyranosyl-D-mannitol.

White or almost white powder or granules, freely soluble in water.

Isomaltitol. $C_{12}H_{24}O_{11}$. (M_r 344.3). *1161200.* [534-73-6]. 6-*O*-α-D-Glucopyranosyl-D-glucitol.

White or almost white powder, freely soluble in water.

Isomenthol. $C_{10}H_{20}O$. (M_r 156.3). *1047000.* [23283-97-8]. (+)-*Isomenthol:* (1*S*,2*R*,5*R*)-2-isopropyl-5-methylcyclohexanol. (±)-*Isomenthol:* a mixture of equal parts of (1*S*,2*R*,5*R*)- and (1*R*,2*S*,5*S*)-2-isopropyl-5-methylcyclohexanol.

Colourless crystals, practically insoluble in water, very soluble in ethanol (96 per cent).

$[\alpha]_D^{20}$: (+)-*Isomenthol*: about + 24, determined on a 100 g/L solution in *ethanol (96 per cent) R*.

bp: (+)-*Isomenthol*: about 218 °C. (±)-*Isomenthol*: about 218 °C.

mp: (+)-*Isomenthol*: about 80 °C. (±)-*Isomenthol*: about 53 °C.

(+)-Isomenthone. $C_{10}H_{18}O$. (M_r 154.2). *1047100.* (1*R*)-*cis*-*p*-Menthan-3-one. (1*R*)-*cis*-2-Isopropyl-5-methylcyclohexanone.

Contains variable amounts of menthone. A colourless liquid, very slightly soluble in water, soluble in ethanol (96 per cent).

d_{20}^{20}: about 0.904.

n_D^{20}: about 1.453.

$[\alpha]_D^{20}$: about + 93.2.

Isomenthone used in gas chromatography complies with the following additional test.

Assay. Gas chromatography (*2.2.28*) as prescribed in the monograph *Peppermint oil (0405).*

Test solution. The substance to be examined.

Content: minimum 80.0 per cent, calculated by the normalisation procedure.

Isomethyleugenol. $C_{11}H_{14}O_2$. (M_r 178.2). *1181900.* [93-16-3]. 1,2-Dimethoxy-4-prop-1-enylbenzene.

Isomethyleugenol used in gas chromatography complies with the following additional test.

Assay. Gas chromatography (*2.2.28*) as prescribed in the monograph *Niaouli oil, cineole type (2468).*

Content: minimum 97.0 per cent, calculated by the normalisation procedure.

Isopropylamine. C_3H_9N. (M_r 59.1). *1119800.* [75-31-0]. Propan-2-amine.

Colourless, highly volatile, flammable liquid.

n_D^{20}: about 1.374.

bp: 32 °C to 34 °C.

Isopropyl iodide. C_3H_7I. (M_r 170.0). *1166600.* [75-30-9]. 2-Iodopropane.

Isopropyl methanesulfonate. $C_4H_{10}O_3S$. (M_r 138.2). *1179400.* [926-06-7]. 1-methylethyl methanesulfonate.

Clear, colourless liquid.

Content: minimum 99.0 per cent.

Density: about 1.129 g/cm^3 (20 °C).

n_D^{20}: 1.418-1.421.

bp: about 82 °C at 6 mm Hg.

Isopropyl myristate. *1047200.* [110-27-0].

See *Isopropyl myristate (0725).*

4-Isopropylphenol. $C_9H_{12}O$. (M_r 136.2). *1047300.* [99-89-8].

Content: minimum 98 per cent.

bp: about 212 °C.

mp: 59 °C to 61 °C.

Isopulegol. $C_{10}H_{18}O$. (M_r 154.2). *1139600.* [89-79-2]. (−)-Isopulegol. (1*R*,2*S*,5*R*)-2-Isopropenyl-5-methylcyclohexanol.

d_4^{20}: about 0.911.

n_D^{20}: about 1.472.

bp: about 91 °C.

Isopulegol used in gas chromatography complies with the following additional test.

Assay. Gas chromatography (prescribed in the monograph *Mint oil, partly dementholised (1838).*

Content: minimum per cent, calculated by the normalisation procedure.

Isoquercitroside. $C_{21}H_{20}O_{12}$. (M_r 464.4). *1136500.* [21637-25-2]. Isoquercitrin. 2-(3,4-Dihydroxyphenyl)-3-(β-D-glucofuranosyloxy)-5,7-dihydroxy-4*H* ,4 ,5,7-Pentahydroxyflavone-3-glucoside.

Isosilibinin. $C_{25}H_{22}O_{10}$. (M_r 482.4). *1149900.* [72581-71-6]. 3,5,7-Trihydroxy-2-[2-(4-hydroxy-3-methoxyphenyl)-3-hydroxymethyl-2,3-dihydro-1,4-benzodioxin-6-yl]chroman-4-one.

White to yellowish powder, practically insoluble in water, soluble in acetone and in methanol.

Kaolin, light. *1047400.* [1332-58-7].

A purified native hydrated aluminium silicate. It contains a suitable dispersing agent.

Light, white or almost white powder free from gritty particles, unctuous to the touch, practically insoluble in water and in mineral acids.

Coarse particles: maximum 0.5 per cent.

Place 5.0 g in a ground-glass-stoppered cylinder about 160 mm long and 35 mm in diameter and add 60 mL of a 10 g/L solution of *sodium pyrophosphate R*. Shake vigorously and allow to stand for 5 min. Using a pipette, remove 50 mL of the liquid from a point about 5 cm below the surface. To the remaining liquid add 50 mL of *water R*, shake, allow to stand for 5 min and remove 50 mL before. Repeat the operations until a total of 400 mL has been removed. Transfer the remaining suspension to an evaporating dish. Evaporate to dryness on a water-bath and dry the residue to constant mass at 100-105 °C. The residue weighs not more than 25 mg.

Fine particles. Disperse 5.0 g in 250 mL of *water R* by shaking vigorously for 2 min. Immediately pour into a glass cylinder 50 mm in diameter and, using a pipette, transfer 20 mL to a glass dish, evaporate to dryness on a water-bath and dry to constant mass at 100-105 °C. Allow the remainder of the suspension to stand at 20 °C for 4 h and, using a pipette with its tip exactly 5 cm below the surface, withdraw a further 20 mL without disturbing the sediment, place in a glass dish, evaporate to dryness on a water-bath and dry to constant mass at 100-105 °C. The mass of the second residue is not less than 70 per cent of that of the first residue.

11-Keto-β-boswellic acid. $C_{30}H_{46}O_4$. (M_r 470.7). *1167600.* [17019-92-0]. 3α-Hydroxy-11-oxours-12-en-24-oic acid. (4β)-3α-Hydroxy-11-oxours-12-en-23-oic acid.

White or almost white powder, insoluble in water, soluble in acetone, in anhydrous ethanol and in methanol.

mp: 195 °C to 197 °C.

11-Keto-β-boswellic acid used in liquid chromatography complies with the following additional test.

Assay. Liquid chromatography (*2.2.29*) as prescribed in the monograph *Indian frankincense (2310)*.

Content: minimum 90 per cent, calculated by the normalisation procedure.

Kieselguhr for chromatography. *1047500.*

White or yellowish-white, light powder, practically insoluble in water, in dilute acids and in organic solvents.

Filtration rate. Use a chromatography column 0.25 m long and 10 mm in internal diameter with a sintered-glass (100) plate and two marks at 0.10 m and 0.20 m above the plate. Place sufficient of the substance to be examined in the column to reach the first mark and fill to the second mark with *water R*. When the first drops begin to flow from the column, fill to the second mark again with *water R* and measure the time required for the first 5 mL to flow from the column. The flow rate is not less than 1 mL/min.

Appearance of the eluate. The eluate obtained in the test for filtration rate is colourless (*2.2.2, Method I*).

Acidity or alkalinity. To 1.00 g add 10 mL of *water R*, shake vigorously and allow to stand for 5 min. Filter the suspension on a filter previously washed with hot *water R* until the washings are neutral. To 2.0 mL of the filtrate add 0.05 mL of *methyl red solution R*; the solution is yellow. To 2.0 mL of the filtrate add 0.05 mL of *phenolphthalein solution R1*; the solution is at most slightly pink.

Water-soluble substances. Place 10.0 g in a chromatography column 0.25 m long and 10 mm in internal diameter and elute with *water R*. Collect the first 20 mL of eluate, evaporate to dryness and dry the residue at 100 °C to 105 °C. The residue weighs not more than 10 mg.

Iron (*2.4.9*): maximum 200 ppm.

To 0.50 g add 10 mL of a mixture of equal volumes of *hydrochloric acid R1* and *water R*, shake vigorously, allow to stand for 5 min and filter. 1.0 mL of the filtrate complies with the test for iron.

Loss on ignition: maximum 0.5 per cent. During heating to red heat (600 ± 50 °C) the substance does not become brown or black.

Kieselguhr G. *1047600.*

Consists of kieselguhr treated with hydrochloric acid and calcined, to which is added about 15 per cent of calcium sulfate hemihydrate.

A fine greyish-white powder; the grey colour becomes more pronounced on triturating with water. The average particle size is 10-40 µm.

Calcium sulfate content. Determine by the method prescribed for *silica gel G R*.

pH (*2.2.3*). Shake 1 g with 10 mL of *carbon dioxide-free water R* for 5 min. The pH of the suspension is 7 to 8.

Chromatographic separation. Thin-layer chromatography (*2.2.27*). Prepare plates using a slurry of the kieselguhr G with a 2.7 g/L solution of *sodium acetate R*. Apply 5 µL of a solution containing 0.1 g/L of lactose, sucrose, glucose and fructose in *pyridine R*. Develop over a path of 14 cm using a mixture of 12 volumes of *water R*, 23 volumes of *2-propanol R* and 65 volumes of *ethyl acetate R*. The migration time of the solvent is about 40 min. Dry, spray onto the plate about 10 mL of *anisaldehyde solution R* and heat for 5-10 min at 100-105 °C. The chromatogram shows four well-defined spots without tailing and well separated from each other.

Lactic acid. *1047800.* [50-21-5].

See *Lactic acid (0458)*.

Lactic reagent. *1047801.*

Solution A. To 60 mL of *lactic acid R* add 45 mL of previously filtered *lactic acid R* saturated without heating with *Sudan red G R*; as lactic acid saturates slowly without heating, an excess of colorant is always necessary.

Solution B. Prepare 10 mL of a saturated solution of *aniline R*. Filter.

Solution C. Dissolve 75 mg of *potassium iodide R* in water and dilute to 70 mL with the same solvent. Add 10 mL of *ethanol (96 per cent) R* and 0.1 g of *iodine R*. Shake.

Mix solutions A and B. Add solution C.

Lactobionic acid. $C_{12}H_{22}O_{12}$. (M_r 358.3). *1101600.* [96-82-2].

White or almost white, crystalline powder, freely soluble in water, practically insoluble in ethanol (96 per cent).

mp: about 115 °C.

Lactose. *1047900.* [5989-81-1].

See *Lactose (0187)*.

β-Lactose. $C_{12}H_{22}O_{11}$. (M_r 342.3). *1150100.* [5965-66-2]. β-D-Lactose.

White or slightly yellowish powder.

Content: minimum 99 per cent.

α-D-Lactose: not greater than 35 per cent.

Assay. Gas chromatography (*2.2.28*): use the normalisation procedure.

Column:

- *size*: *l* = 30 m, Ø = 0.25 mm;
- *stationary phase*: *poly[(cyanopropyl)(phenyl)][dimethyl]siloxane R* (film thickness 1 µm).

Carrier gas: *helium for chromatography R*.

Temperature:

	Time (min)	Temperature (°C)
Column	0 - 32.5	20 → 280
Injection port		250
Detector		250

Detection: flame ionisation.

Injection: an appropriate derivatised sample.

α-Lactose monohydrate. $C_{12}H_{22}O_{11},H_2O$. (M_r 360.3). *1150000.* [5989-81-1]. α-D-Lactose monohydrate.

White or almost white powder.

Content: minimum 97 per cent.

β-D-Lactose: less than 3 per cent.

Assay. Gas chromatography (*2.2.28*): use the normalisation procedure.

Column:

- *size*: *l* = 30 m, Ø = 0.25 mm;
- *stationary phase*: *poly(dimethyl)siloxane R* (film thickness 1 µm).

Carrier gas: *helium for chromatography R*.

Temperature:

	Time (min)	Temperature (°C)
Column	0 - 12.5	230 → 280
Injection port		250
Detector		280

Detection: flame ionisation.

Injection: an appropriate derivatised sample.

Lanatoside C. $C_{49}H_{76}O_{20}$. (M_r 985). *1163300.* [17575-22-3]. 3β-[(β-D-Glucopyranosyl-(1→4)-3-*O*-acetyl-2,6-dideoxy-β-D-*ribo*-hexopyranosyl-(1→4)-2,6-dideoxy-β-D-*ribo*-hexopyranosyl-(1→4)-2,6-dideoxy-β-D-*ribo*-hexopyranosyl)oxy]-12β,14-dihydroxy-5β-card-20(22)-enolide.

Long, flat prisms obtained after recrystallisation in ethanol (96 per cent), freely soluble in pyridine and in dioxane.

Lanthanum chloride heptahydrate. $LaCl_3,7H_2O$. (M_r 371.4). *1167200.*

White or almost white powder or colourless crystals, freely soluble in water.

Lanthanum chloride solution. *1114001.*

To 58.65 g of *lanthanum trioxide R* slowly add 100 mL of *hydrochloric acid R*. Heat to boiling. Allow to cool and dilute to 1000.0 mL with *water R*.

Lanthanum nitrate. $La(NO_3)_3,6H_2O$. (M_r 433.0). *1048000.* [10277-43-7]. Lanthanum trinitrate hexahydrate.

Colourless crystals, deliquescent, freely soluble in water.

Storage: in an airtight container.

Lanthanum nitrate solution. *1048001.*

A 50 g/L solution.

Lanthanum trioxide. La_2O_3. (M_r 325.8). *1114000.* [1312-81-8].

An almost white, amorphous powder, practically insoluble in *water R*. It dissolves in dilute solutions of mineral acids and absorbs atmospheric carbon dioxide.

Calcium: maximum 5 ppm.

Lauric acid. $C_{12}H_{24}O_2$. (M_r 200.3). *1143100.* [143-07-7]. Dodecanoic acid.

White or almost white, crystalline powder, practically insoluble in water, freely soluble in ethanol (96 per cent).

mp: about 44 °C.

Lauric acid used in the assay of total fatty acids in Saw palmetto fruit (1848) complies with the following additional test.

Assay. Gas chromatography (*2.2.28*) as prescribed in the monograph *Saw palmetto fruit (1848)*.

Content: minimum 98 per cent, calculated by the normalisation procedure.

Lauryl alcohol. $C_{12}H_{26}O$. (M_r 186.3). *1119900.* [112-53-8]. Dodecan-1-ol.

d_{20}^{20}: about 0.820.

mp: 24 °C to 27 °C.

Content: minimum 98.0 per cent, determined by gas chromatography.

Lavandulol. $C_{10}H_{18}O$. (M_r 154.2). *1114100.* [498-16-8]. (*R*)-5-Methyl-2-(1-methylethenyl)-4-hexen-1-ol.

Oily liquid with a characteristic odour.

Lavandulol used in gas chromatography complies with the following additional test.

Assay. Gas chromatography (*2.2.28*) as prescribed in the monograph *Lavender oil (1338)*.

Test solution. The substance to be examined.

Content: minimum 90.0 per cent, calculated by the normalisation procedure.

Lavandulyl acetate. $C_{12}H_{20}O_2$. (M_r 196.3). *1114200.* [25905-14-0]. 2-Isopropenyl-5-methylhex-4-en-1-yl acetate.

Colourless liquid with a characteristic odour.

Lavandulyl acetate used in gas chromatography complies with the following additional test.

Assay. Gas chromatography (*2.2.28*) as prescribed in the monograph *Lavender oil (1338)*.

Test solution. The substance to be examined.

Content: minimum 93.0 per cent, calculated by the normalisation procedure.

Lead acetate. $C_4H_6O_4Pb,3H_2O$. (M_r 379.3). *1048100.* [6080-56-4]. Lead di-acetate.

Colourless crystals, efflorescent, freely soluble in water, soluble in ethanol (96 per cent).

Lead acetate cotton. *1048101.*

Immerse absorbent cotton in a mixture of 1 volume of *dilute acetic acid R* and 10 volumes of *lead acetate solution R*. Drain off the excess of liquid, without squeezing the cotton, by placing it on several layers of filter paper. Allow to dry in air.

Storage: in an airtight container.

Lead acetate paper. *1048102.*

Immerse filter paper weighing about 80 g/m^2 in a mixture of 1 volume of *dilute acetic acid R* and 10 volumes of *lead acetate solution R*. After drying, cut the paper into strips 15 mm by 40 mm.

Lead acetate solution. *1048103.*

A 95 g/L solution in *carbon dioxide-free water R*.

Lead dioxide. PbO_2. (M_r 239.2). *1048200.* [1309-60-0].

Dark brown powder, evolving oxygen when heated, practically insoluble in water, soluble in hydrochloric acid with evolution of chlorine, soluble in dilute nitric acid in the presence of hydrogen peroxide, oxalic acid or other reducing agents, soluble in hot, concentrated alkali hydroxide solutions.

Lead nitrate. $Pb(NO_3)_2$. (M_r 331.2). *1048300.* [10099-74-8]. Lead dinitrate.

White or almost white, crystalline powder or colourless crystals, freely soluble in water.

Lead nitrate solution. *1048301.*

A 33 g/L solution.

Lead subacetate solution. *1048400.* [1335-32-6]. Basic lead acetate solution.

Content: 16.7 per cent *m/m* to 17.4 per cent *m/m* of Pb (A_r 207.2) in a form corresponding approximately to the formula $C_8H_{14}O_{10}Pb_3$.

Dissolve 40.0 g of *lead acetate R* in 90 mL of *carbon dioxide-free water R*. Adjust the pH to 7.5 with *strong sodium hydroxide solution R*. Centrifuge and use the clear colourless supernatant solution.

The solution remains clear when stored in a well-closed container.

Leiocarposide. $C_{27}H_{34}O_{16}$. (M_r 614.5). *1150200.* [71953-77-0]. 2-(β-D-Glucopyranosyloxy)benzyl 3-(β-D-glucopyranosyloxy)-6-hydroxy-2-methoxybenzoate. 2-[[[3-(β-D-Glucopyranosyloxy)-6-hydroxy-2-methoxybenzoyl]oxy]methyl]phenyl-β-D-glucopyranoside.

White or almost white powder, soluble in water, freely soluble in methanol, slightly soluble in ethanol (96 per cent).

mp: 190 °C to 193 °C.

Lemon oil. *1101700.*

See *Lemon oil (0620)*.

Leucine. *1048500.* [61-90-5].

See *Leucine (0771)*.

Levodopa. *1170000.* [59-92-7].

See *Levodopa (0038)*.

(*Z*)-Ligustilide. $C_{12}H_{14}O_2$. (M_r 190.2). *1180300.* [81944-09-4]. (3*Z*)-3-Butylidene-1,3,4,5-tetrahydroisobenzofuran-1-one.

Limonene. $C_{10}H_{16}$. (M_r 136.2). *1048600.* [5989-27-5]. D-Limonene. (+)-*p*-Mentha-1,8-diene. (*R*)-4-Isopropenyl-1-methylcyclohex-1-ene.

Colourless liquid, practically insoluble in water, soluble in ethanol (96 per cent).

d_{20}^{20}: about 0.84.

n_D^{20}: 1.471 to 1.474.

$[\alpha]_D^{20}$: about + 124.

bp: 175 °C to 177 °C.

Limonene used in gas chromatography complies with the following additional test.

Assay. Gas chromatography (*2.2.28*) as prescribed in the monograph *Peppermint oil (0405)*.

Test solution. The substance to be examined.

Content: minimum 99.0 per cent, calculated by the normalisation procedure.

Linalol. $C_{10}H_{18}O$. (M_r 154.2). *1048700.* [78-70-6]. (*RS*)-3,7-Dimethylocta-1,6-dien-3-ol.

Mixture of two stereoisomers (licareol and coriandrol).

Liquid, practically insoluble in water.

d_{20}^{20}: about 0.860.

n_D^{20}: about 1.462.

bp: about 200 °C.

Linalol used in gas chromatography complies with the following test.

Assay. Gas chromatography (*2.2.28*) as prescribed in the monograph *Anise oil (0804)*.

Test solution. The substance to be examined.

Content: minimum 98.0 per cent, calculated by the normalisation procedure.

Linalyl acetate. $C_{12}H_{20}O_2$. (M_r 196.3). *1107200.* [115-95-7]. (*RS*)-1,5-Dimethyl-1-vinylhex-4-enyl acetate.

Colourless or slightly yellow liquid with a strong odour of bergamot and lavender.

d_{25}^{25}: 0.895 to 0.912.

n_D^{20}: 1.448 to 1.451.

bp: about 215 °C.

Linalyl acetate used in gas chromatography complies with the following additional test.

Assay. Gas chromatography (*2.2.28*) as prescribed in the monograph *Bitter-orange-flower oil (1175)*.

Test solution. The substance to be examined.

Content: minimum 95.0 per cent, calculated by the normalisation procedure.

Lindane. $C_6H_6Cl_6$. (M_r 290.8). *1128900.* [58-89-9]. γ-Hexachlorocyclohexane.

For the monograph *Wool fat (0134)*, a suitable certified reference solution (10 ng/µL in cyclohexane) may be used.

Linoleic acid. $C_{18}H_{32}O_2$. (M_r 280.5). *1143200.* [60-33-3]. (9*Z*,12*Z*)-Octadeca-9,12-dienoic acid.

Colourless, oily liquid.

d_4^{20}: about 0.903.

n_D^{20}: about 1.470.

Linoleic acid used in the assay of total fatty acids in Saw palmetto fruit (1848) complies with the following additional test.

Assay. Gas chromatography (*2.2.28*) as prescribed in the monograph *Saw palmetto fruit (1848)*.

Content: minimum 98 per cent, calculated by the normalisation procedure.

Linolenic acid. $C_{18}H_{30}O_2$. (M_r 278.4). *1143300.* [463-40-1]. (9*Z*,12*Z*,15*Z*)-Octadeca-9,12,15-trienoic acid. α-Linolenic acid.

Colourless liquid, practically insoluble in water, soluble in organic solvents.

d_4^{20}: about 0.915.

n_D^{20}: about 1.480.

Linolenic acid used in the assay of total fatty acids in Saw palmetto fruit (1848) complies with the following additional test.

Assay. Gas chromatography (*2.2.28*) as prescribed in the monograph *Saw palmetto fruit (1848)*.

Content: minimum 98 per cent, calculated by the normalisation procedure.

Linolenyl alcohol. $C_{18}H_{32}O$. (M_r 264.4). *1156200.* [24149-05-1]. (9*Z*,12*Z*,15*Z*)-Octadeca-9,12,15-trien-1-ol. α-Linolenyl alcohol.

Content: minimum 96 per cent.

Linoleyl alcohol. $C_{18}H_{34}O$. (M_r 266.5). *1155900.* [506-43-4]. (9*Z*,12*Z*)-Octadeca-9,12-dien-1-ol.

Relative density: 0.830.

Content: minimum 85 per cent.

Linsidomine hydrochloride. $C_6H_{11}ClN_4O_2$. (M_r 206.6). *1171200.* [16142-27-1]. 3-(Morpholin-4-yl)sydnonimine hydrochloride. 3-(Morpholin-4-yl)-1,2,3-oxadiazol-3-ium-5-aminide hydrochloride.

White or almost white powder.

Liquid scintillation cocktail. *1167300.*

Commercially available solution for the determination of radioactivity by liquid scintillation counting. It contains one or more fluorescent agents and mostly one or more emulsifying agents in a suitable organic solvent or mixture of organic solvents.

Liquid scintillation cocktail R1. *1176800.*

To 1000 mL of *dioxan R*, add 0.3 g of *methylphenyloxazolylbenzene R*, 7 g of *diphenyloxazole R* and 100 g of *naphthalene R*.

Lithium. Li. (A_r 6.94). *1048800.* [7439-93-2].

A soft metal whose freshly cut surface is silvery-grey. It rapidly tarnishes in contact with air. It reacts violently with water, yielding hydrogen and giving a solution of lithium hydroxide; soluble in methanol, yielding hydrogen and a solution of lithium methoxide; practically insoluble in light petroleum.

Storage: under light petroleum or liquid paraffin.

Lithium carbonate. Li_2CO_3. (M_r 73.9). *1048900.* [554-13-2]. Dilithium carbonate.

White or almost white, light powder, sparingly soluble in water, very slightly soluble in ethanol (96 per cent). A saturated solution at 20 °C contains about 13 g/L of Li_2CO_3.

Lithium chloride. LiCl. (M_r 42.39). *1049000.* [7447-41-8].

Crystalline powder or granules or cubic crystals, deliquescent, freely soluble in water, soluble in acetone and in ethanol (96 per cent). Aqueous solutions are neutral or slightly alkaline.

Storage: in an airtight container.

Lithium hydroxide. $LiOH,H_2O$. (M_r 41.96). *1049100.* [1310-66-3]. Lithium hydroxide monohydrate.

White or almost white, granular powder, strongly alkaline, it rapidly absorbs water and carbon dioxide, soluble in water, sparingly soluble in ethanol (96 per cent).

Storage: in an airtight container.

Lithium metaborate, anhydrous. $LiBO_2$. (M_r 49.75). *1120000.* [13453-69-5].

Lithium sulfate. Li_2SO_4,H_2O. (M_r 128.0). *1049200.* [10102-25-7]. Dilithium sulfate monohydrate.

Colourless crystals, freely soluble in water, practically insoluble in ethanol (96 per cent).

Lithium trifluoromethanesulfonate. CF_3LiO_3S. (M_r 156.0). *1173400.* [33454-82-9].

Litmus. *1049300.* [1393-92-6].

Schultz No. 1386.

Indigo-blue fragments prepared from various species of Rocella, Lecanora or other lichens, soluble in water, practically insoluble in ethanol (96 per cent).

Colour change: pH 5 (red) to pH 8 (blue).

Litmus paper, blue. *1049301.*

Boil 10 parts of coarsely powdered *litmus R* for 1 h with 100 parts of *ethanol (96 per cent) R*. Decant the alcohol and add to the residue a mixture of 45 parts of *ethanol (96 per cent) R* and 55 parts of *water R*. After 2 days decant the clear liquid. Impregnate strips of filter paper with the solution and allow to dry.

Test for sensitivity. Immerse a strip measuring 10 mm by 60 mm in a mixture of 10 mL of *0.02 M hydrochloric acid* and 90 mL of *water R*. On shaking the paper turns red within 45 s.

Litmus paper, red. *1049302.*

To the blue litmus extract, add *dilute hydrochloric acid R* dropwise until the blue colour becomes red. Impregnate strips of filter paper with the solution and allow to dry.

Test for sensitivity. Immerse a strip measuring 10 mm by 60 mm in a mixture of 10 mL of *0.02 M sodium hydroxide* and 90 mL of *water R*. On shaking the paper turns blue within 45 s.

Loganin. $C_{17}H_{26}O_{10}$. (M_r 390.4). *1136700.* [18524-94-2]. Methyl (1*S*,4a*S*,6*S*,7*R*,7a*S*)-1-(β-D-glucopyranosyloxy)-6-hydroxy-7-methyl-1,4a,5,6,7,7a-hexahydro-cyclopenta[*c*]pyran-4-carboxylate.

mp: 220 °C to 221 °C.

Longifolene. $C_{15}H_{24}$. (M_r 204.4). *1150300.* [475-20-7]. (1*S*,3a*R*,4*S*,8a*S*)-4,8,8-Trimethyl-9-methylenedecahydro-1,4-methanoazulene.

Oily, colourless liquid, practically insoluble in water, miscible with ethanol (96 per cent).

d_4^{18}: 0.9319.

n_D^{20}: 1.5050.

$[\alpha]_D^{20}$: + 42.7.

bp: 254 °C to 256 °C.

Longifolene used in gas chromatography complies with the following additional test.

Assay. Gas chromatography (*2.2.28*) as prescribed in the monograph *Turpentine oil, Pinus pinaster type (1627).*

Content: minimum 98.0 per cent, calculated by the normalisation procedure.

Low-vapour-pressure hydrocarbons (type L). *1049400.*

Unctuous mass, soluble in benzene and in toluene.

Lumiflavine. $C_{13}H_{12}N_4O_2$. (M_r 256.3). *1141000.* [1088-56-8]. 7,8,10-Trimethylbenzo[*g*]pteridine-2,4(3*H*,10*H*)-dione.

Yellow powder or orange crystals, very slightly soluble in water, freely soluble in methylene chloride.

Luteolin-7-glucoside. $C_{21}H_{20}O_{11}$. (M_r 448.4). *1163400.* [5373-11-5]. 2-(3,4-Dihydroxyphenyl)-7-(β-D-glucopyranosyloxy)-5-hydroxy-4*H*-1-benzopyran-4-one.

Yellow powder.

Absorbance (*2.2.25*). A solution in *methanol R* shows absorption maxima at 255 nm, 267 nm, 290 nm and 350 nm.

mp: about 247 °C.

Macrogol 23 lauryl ether. *1129000.*

See *Macrogol lauryl ether (1124)*, the number of moles of ethylene oxide reacted per mole of lauryl alcohol being 23 (nominal value).

Macrogol 200. *1099200.* [25322-68-3]. Polyethyleneglycol 200.

Clear, colourless or almost colourless viscous liquid, very soluble in acetone and in anhydrous ethanol, practically insoluble in fatty oils.

d_{20}^{20}: about 1.127.

n_D^{20}: about 1.450.

Macrogol 200 R1. *1099201.*

Introduce 500 mL of *macrogol 200 R* into a 1000 mL round bottom flask. Using a rotation evaporator remove any volatile components applying for 6 h a temperature of 60 °C and a vacuum with a pressure of 1.5-2.5 kPa.

Macrogol 300. *1067100.* [25322-68-3]. Polyethyleneglycol 300.

See *Macrogols (1444)*.

Macrogol 400. *1067200.* [25322-68-3]. Polyethyleneglycol 400.

See *Macrogols (1444)*.

Macrogol 1000. *1067300.* [25322-68-3]. Polyethyleneglycol 1000.

See *Macrogols (1444)*.

Macrogol 1500. *1067400.* [25322-68-3]. Polyethyleneglycol 1500.

See *Macrogols (1444)*.

Macrogol 20 000. *1067600.* Polyethyleneglycol 20 000.

See *Macrogols (1444)*.

Macrogol 20 000 2-nitroterephthalate. *1067601.* Polyethyleneglycol 20 000 2-nitroterephthalate.

Macrogol 20 000 R modified by treating with 2-nitroterephthalate acid.

A hard, white or almost white, waxy solid, soluble in acetone.

Magnesium. Mg. (A_r 24.30). *1049500.* [7439-95-4].

Silver-white ribbon, turnings or wire, or a grey powder.

Magnesium acetate. $C_4H_6MgO_4,4H_2O$. (M_r 214.5). *1049600.* [16674-78-5]. Magnesium diacetate tetrahydrate.

Colourless crystals, deliquescent, freely soluble in water and in ethanol (96 per cent).

Storage: in an airtight container.

Magnesium chloride. *1049700.* [7791-18-6].

See *Magnesium chloride hexahydrate (0402)*.

Magnesium nitrate. $Mg(NO_3)_2,6H_2O$. (M_r 256.4). *1049800.* [13446-18-9]. Magnesium nitrate hexahydrate.

Colourless, clear crystals, deliquescent, very soluble in water, freely soluble in ethanol (96 per cent).

Storage: in an airtight container.

Magnesium nitrate solution. *1049801.*

Dissolve 17.3 g of *magnesium nitrate R* in 5 mL of *water R* warming gently and add 80 mL of *ethanol (96 per cent) R*. Cool and dilute to 100.0 mL with the same solvent.

Magnesium nitrate solution R1. *1049802.*

Dissolve 20 g of *magnesium nitrate R* ($Mg(NO_3)_2,6H_2O$) in *deionised distilled water R* and dilute to 100 mL with the same solvent. Immediately before use, dilute 10 mL to 100 mL with *deionised distilled water R*. A volume of 5 µL will provide 0.06 mg of Mg $(NO_3)_2$.

Magnesium oxide. *1049900.* [1309-48-4].

See *Light magnesium oxide (0040).*

Magnesium oxide R1. *1049901.*

Complies with the requirements prescribed for *magnesium oxide R* with the following modifications.

Arsenic (*2.4.2, Method A*): maximum 2 ppm.

Dissolve 0.5 g in a mixture of 5 mL of *water R* and 5 mL of *hydrochloric acid R1*.

Heavy metals (*2.4.8*): maximum 10 ppm.

Dissolve 1.0 g in a mixture of 3 mL of *water R* and 7 mL of *hydrochloric acid R1*. Add 0.05 mL of *phenolphthalein solution R* and *concentrated ammonia R* until a pink colour is obtained. Neutralise the excess of ammonia by the addition of *glacial acetic acid R*. Add 0.5 mL in excess and dilute to 20 mL with *water R*. Filter, if necessary. 12 mL of the solution complies with test A. Prepare the reference solution using a mixture of 5 mL of *lead standard solution (1 ppm Pb) R* and 5 mL of *water R*.

Iron (*2.4.9*): maximum 50 ppm.

Dissolve 0.2 g in 6 mL of *dilute hydrochloric acid R* and dilute to 10 mL with *water R*.

Magnesium oxide, heavy. *1050000.* [1309-48-4].

See *Heavy magnesium oxide (0041).*

Magnesium silicate for pesticide residue analysis. *1129100.* [1343-88-0].

Magnesium silicate for chromatography (60-100 mesh).

Magnesium sulfate. *1050200.* [10034-99-8].

See *Magnesium sulfate heptahydrate (0044).*

Magnolol. $C_{18}H_{18}O_2$. (M_r 266.3). *1182800.* [528-43-8]. 5,5′-Di(prop-2-enyl)biphenyl-2,2′-diol. 5,5′-Diallyl-2,2′-dihydroxybiphenyl. 5,5′-Di-2-propenyl-[1,1′-biphenyl]-2,2′-diol.

Maize oil. *1050400.*

See *Maize oil, refined (1342).*

Malachite green. $C_{23}H_{25}ClN_2$. (M_r 364.9). *1050500.* [123333-61-9].

Schultz No. 754.

Colour Index No. 42000.
[4-[[4-(Dimethylamino)phenyl]phenylmethylene]cyclohexa-2,5-dien-1-ylidene]dimethylammonium chloride.

Green crystals with a metallic lustre, very soluble in water giving a bluish-green solution, soluble in ethanol (96 per cent) and in methanol.

Absorbance (*2.2.25*). A 0.01 g/L solution in *ethanol (96 per cent) R* shows an absorption maximum at 617 nm.

Malachite green solution. *1050501.*

A 5 g/L solution in *anhydrous acetic acid R*.

Malathion. $C_{10}H_{19}O_6PS_2$. (M_r 330.3). *1129200.* [121-75-5].

bp: about 156 °C.

A suitable certified reference solution (10 ng/µL in iso-octane) may be used.

Maleic acid. *1050600.* [110-16-7].

See *Maleic acid (0365).*

Maleic anhydride. $C_4H_2O_3$. (M_r 98.1). *1050700.* [108-31-6]. Butenedioic anhydride. 2,5-Furandione.

White or almost white crystals, soluble in water forming maleic acid, very soluble in acetone and in ethyl acetate, freely soluble in toluene, soluble in ethanol (96 per cent) with ester formation, very slightly soluble in light petroleum.

mp: about 52 °C.

Any residue insoluble in toluene does not exceed 5 per cent (maleic acid).

Maleic anhydride solution. *1050701.*

Dissolve 5 g of *maleic anhydride R* in *toluene R* and dilute to 100 mL with the same solvent. Use within one month. If the solution becomes turbid, filter.

Maltitol. *1136800.* [585-88-6].

See *Maltitol (1235).*

Maltotriose. $C_{18}H_{32}O_{16}$. (M_r 504.4). *1176300.* [1109-28-0]. α-D-Glucopyranosyl-(1→4)-α-D-glucopyranosyl-(1→4)-D-glucose.

White or almost white, crystalline powder, very soluble in water.

mp: about 134 °C.

Mandelic acid. $C_8H_8O_3$. (M_r 152.1). *1171300.* [90-64-2]. 2-Hydroxy-2-phenylacetic acid.

White crystalline flakes, soluble in water.

mp: 118 to 121 °C.

Manganese sulfate. $MnSO_4,H_2O$. (M_r 169.0). *1050900.* [10034-96-5]. Manganese sulfate monohydrate.

Pale-pink, crystalline powder or crystals, freely soluble in water, practically insoluble in ethanol (96 per cent).

Loss on ignition: 10.0 per cent to 12.0 per cent, determined on 1.000 g at 500 ± 50 °C.

Mannitol. *1051000.* [69-65-8].

See *Mannitol (0559).*

Mannose. $C_6H_{12}O_6$. (M_r 180.2). *1051100.* [3458-28-4]. D-(+)-Mannose.

white or almost white, crystalline powder or small crystals, very soluble in water, slightly soluble in anhydrous ethanol.

$[\alpha]_D^{20}$: + 13.7 + 14.7, determined on a 200 g/L solution in *water R* containing about 0.05 per cent of NH_3.

mp: about 132 °C, with decomposition.

Marrubiin. $C_{20}H_{28}O_4$. (M_r 332.4). *1158300.* [465-92-9]. (2a*S*,5a*S*,6*R*,7*R*,8a*R*,8b*R*)-6-[2-(Furan-3-yl)ethyl]-6-hydroxy-2a,5a,7-trimethyldecahydro-2*H*-naphtho[1,8-*bc*]furan-2-one.

Colourless, microcrystalline powder.

Marrubiin used in liquid chromatography complies with the following additional test.

Assay. Liquid chromatography (*2.2.29*) as prescribed in the monograph *White horehound (1835).*

Content: minimum 95.0 per cent, calculated by the normalisation procedure.

Meclozine dihydrochloride. *1051200.* [1104-22-9].

See *Meclozine dihydrochloride (0622).*

Melamine. $C_3H_6N_6$. (M_r 126.1). *1051300.* [108-78-1]. 1,3,5-Triazine-2,4,6-triamine.

A white or almost white, amorphous powder, very slightly soluble in water and in ethanol (96 per cent).

Menadione. *1051400.* [58-27-5].

See *Menadione (0507).*

Menthofuran. $C_{10}H_{14}O$. (M_r 150.2). *1051500.* [17957-94-7]. 3,9-Epoxy-*p*-mentha-3,8-diene. 3,6-Dimethyl-4,5,6,7-tetrahydro-benzofuran.

Slightly bluish liquid, very slightly soluble in water, soluble in ethanol (96 per cent).

d_{15}^{20}: about 0.965.

n_D^{20}: about 1.480.

$[\alpha]_D^{20}$: about + 93.

bp: 196 °C.

Menthofuran used in gas chromatography complies with the following additional test.

Assay. Gas chromatography (*2.2.28*) as prescribed in the monograph *Peppermint oil (0405)*.

Test solution. The substance to be examined.

Content: minimum 97.0 per cent, calculated by the normalisation procedure.

Menthol. *1051600.* [2216-51-5].

See *Levomenthol (0619)* and *Racemic menthol (0623)*.

Menthol used in gas chromatography complies with the following additional test.

Assay. Gas chromatography (*2.2.28*) as prescribed in the related substances test included in the monograph *Racemic menthol (0623)*.

Content: minimum 98.0 per cent, calculated by the normalisation procedure.

Menthone. $C_{10}H_{18}O$. (M_r 154.2). *1051700.* [14073-97-3]. (2*S*,5*R*)-2-Isopropyl-5-methylcyclohexanone. (–)-*trans*-*p*-Menthan-3-one.

Contains variable amounts of isomenthone.

Colourless liquid, very slightly soluble in water, very soluble in ethanol (96 per cent).

d_{20}^{20}: about 0.897.

n_D^{20}: about 1.450.

Menthone used in gas chromatography complies with the following additional test.

Assay. Gas chromatography (*2.2.28*) as prescribed in the monograph *Peppermint oil (0405)*.

Test solution. The substance to be examined.

Content: minimum 90.0 per cent, calculated by the normalisation procedure.

Menthyl acetate. $C_{12}H_{22}O_2$. (M_r 198.3). *1051800.* [2623-23-6]. 2-Isopropyl-5-methylcyclohexyl acetate.

Colourless liquid, slightly soluble in water, miscible with ethanol (96 per cent).

d_{20}^{20}: about 0.92.

n_D^{20}: about 1.447.

bp: about 228 °C.

Menthyl acetate used in gas chromatography complies with the following additional test.

Assay. Gas chromatography (*2.2.28*) as prescribed in the monograph *Peppermint oil (0405)*.

Test solution. The substance to be examined.

Content: minimum 97.0 per cent, calculated by the normalisation procedure.

2-Mercaptobenzimidazole. $C_7H_6N_2S$. (M_r 150.2). *1170100.* [583-39-1]. 1*H*-benzimidazole-2-thiol.

mp: about 302 °C.

2-Mercaptoethanol. C_2H_6OS. (M_r 78.1). *1099300.* [60-24-2].

Liquid, miscible with water.

d_{20}^{20}: about 1.116.

bp: about 157 °C.

Mercaptopurine. *1051900.* [6112-76-1].

See *Mercaptopurine (0096)*.

Mercuric acetate. $C_4H_6HgO_4$. (M_r 318.7). *1052000.* [1600-27-7]. Mercury diacetate.

White or almost white crystals, freely soluble in water, soluble in ethanol (96 per cent).

Mercuric acetate solution. *1052001.*

Dissolve 3.19 g of *mercuric acetate R* in *anhydrous acetic acid R* and dilute to 100 mL with the same acid. If necessary, neutralise the solution with *0.1 M perchloric acid* using 0.05 mL of *crystal violet solution R* as indicator.

Mercuric bromide. $HgBr_2$. (M_r 360.4). *1052100.* [7789-47-1]. Mercury dibromide.

White or faintly yellow crystals or a crystalline powder, slightly soluble in water, soluble in ethanol (96 per cent).

Mercuric bromide paper. *1052101.*

In a rectangular dish place a 50 g/L solution of *mercuric bromide R* in *anhydrous ethanol R* and immerse in it pieces of white filter paper weighing 80 g per square metre (speed of filtration = filtration time expressed in seconds for 100 mL of water at 20 °C with a filter surface of 10 cm^2 and constant pressure of 6.7 kPa: 40 s to 60 s), each measuring 1.5 cm by 20 cm and folded in two. Allow the excess liquid to drain and allow the paper to dry, protected from light, suspended over a non-metallic thread. Discard 1 cm from each end of each strip and cut the remainder into 1.5 cm squares or discs of 1.5 cm diameter.

Storage: in a glass-stoppered container wrapped with black paper.

Mercuric chloride. *1052200.* [7487-94-7].

See *Mercuric chloride (0120)*.

Mercuric chloride solution. *1052201.*

A 54 g/L solution.

Mercuric iodide. HgI_2. (M_r 454.4). *1052300.* [7774-29-0]. Mercury di-iodide.

Dense, scarlet, crystalline powder, slightly soluble in water, sparingly soluble in acetone and in ethanol (96 per cent), soluble in an excess of *potassium iodide solution R*.

Storage: protected from light.

Mercuric nitrate. $Hg(NO_3)_2,H_2O$. (M_r 342.6). *1052400.* [7783-34-8]. Mercury dinitrate monohydrate.

Colourless or slightly coloured crystals, hygroscopic, soluble in water in the presence of a small quantity of nitric acid.

Storage: in an airtight container, protected from light.

Mercuric oxide. HgO. (M_r 216.6). *1052500.* [21908-53-2]. Yellow mercuric oxide. Mercury oxide.

A yellow to orange-yellow powder, practically insoluble in water and in ethanol (96 per cent).

Storage: protected from light.

Mercuric sulfate solution. *1052600.* [7783-35-9].

Dissolve 1 g of *mercuric oxide R* in a mixture of 20 mL of *water R* and 4 mL of *sulfuric acid R*.

Mercuric thiocyanate. $Hg(SCN)_2$. (M_r 316.7). *1052700.* [592-85-8]. Mercury di(thiocyanate).

White or almost white, crystalline powder, very slightly soluble in water, slightly soluble in ethanol (96 per cent), soluble in solutions of sodium chloride.

Mercuric thiocyanate solution. *1052701.*

Dissolve 0.3 g of *mercuric thiocyanate R* in *anhydrous ethanol R* and dilute to 100 mL with the same solvent.

Storage: use within 1 week.

Mercury. Hg. (A_r 200.6). *1052800.* [7439-97-6].

Silver-white liquid, breaking into spherical globules which do not leave a metallic trace when rubbed on paper.

d_{20}^{20}: about 13.5.
bp: about 357 °C.

Mercury, nitric acid solution of. *1052801.*

Carefully dissolve 3 mL of *mercury R* in 27 mL of *fuming nitric acid R*. Dilute the solution with an equal volume of *water R*.

Storage: protected from light; use within 2 months.

Mesityl oxide. $C_6H_{10}O$. (M_r 98.1). *1120100.* [141-79-7].
4-Methylpent-3-en-2-one.
Colourless, oily liquid, soluble in 30 parts of water, miscible with most organic solvents.
d_{20}^{20}: about 0.858.
bp: 129 °C to 130 °C.

Metanil yellow. $C_{18}H_{14}N_3NaO_3S$. (M_r 375.4). *1052900.* [587-98-4].
Schultz No. 169.
Colour Index No. 13065.
Sodium 3-[4-(phenylamino)phenylazo]benzenesulfonate.
A brownish-yellow powder, soluble in water and in ethanol (96 per cent).

Metanil yellow solution. *1052901.*

A 1 g/L solution in *methanol R*.

Test for sensitivity. To 50 mL of *anhydrous acetic acid R* add 0.1 mL of the metanil yellow solution. Add 0.05 mL of *0.1 M perchloric acid*; the colour changes from pinkish-red to violet.

Colour change: pH 1.2 (red) to pH 2.3 (orange-yellow).

Metaphosphoric acid. $(HPO_3)_x$. *1053000.* [37267-86-0].
Glassy lumps or sticks containing a proportion of sodium metaphosphate, hygroscopic, very soluble in water.
Nitrates. Boil 1.0 g with 10 mL of *water R*, cool, add 1 mL of *indigo carmine solution R*, 10 mL of *nitrogen-free sulfuric acid R* and heat to boiling. The blue colour is not entirely discharged.
Reducing substances: maximum 0.01 per cent, calculated as H_3PO_3.
Dissolve 35.0 g in 50 mL of *water R*. Add 5 mL of a 200 g/L solution of *sulfuric acid R*, 50 mg of *potassium bromide R* and 5.0 mL of *0.02 M potassium bromate* and heat on a water-bath for 30 min. Allow to cool and add 0.5 g of *potassium iodide R*. Titrate the liberated iodine with *0.1 M sodium thiosulfate*, using 1 mL of *starch solution R* as indicator. Carry out a blank test.
1 mL of *0.02 M potassium bromate* is equivalent to 4.10 mg of H_3PO_3.
Storage: in an airtight container.

Methacrylic acid. $C_4H_6O_2$. (M_r 86.1). *1101800.* [79-41-4].
2-Methylprop-2-enoic acid.
Colourless liquid.
n_D^{20}: about 1.431.
bp: about 160 °C.
mp: about 16 °C.

Methane. CH_4. (M_r 16). *1166300.* [74-82-8].
Content: minimum 99.0 per cent *V/V*.

Methane R1. CH_4. (M_r 16). *1176400.* [74-82-8].
Content: minimum 99.995 per cent *V/V*.

Methanesulfonic acid. CH_4O_3S. (M_r 96.1). *1053100.* [75-75-2].
Clear, colourless liquid, solidifying at about 20 °C, miscible with water, slightly soluble in toluene, practically insoluble in hexane.
d_{20}^{20}: about 1.48.
n_D^{20}: about 1.430.

Methanesulfonyl chloride. CH_3ClO_2S. (M_r 114.6). *1181300.* [124-63-0].
Clear, colourless or slightly yellow liquid.
Content: minimum 99.0 per cent.
Density: 1.48 g/cm³.
n_D^{20}: about 1.452.
bp: about 161 °C.

Methanol. CH_4O. (M_r 32.04). *1053200.* [67-56-1].
Clear, colourless, flammable liquid, miscible with water and with ethanol (96 per cent).
d_{20}^{20}: 0.791 to 0.793.
bp: 64 °C to 65 °C.

Methanol R1. *1053201.*

Complies with the requirements prescribed for *methanol R* and the following additional requirement.

Minimum transmittance (*2.2.25*) using *water R* as compensation liquid: 20 per cent at 210 nm, 50 per cent at 220 nm, 75 per cent at 230 nm, 95 per cent at 250 nm, 98 per cent at 260 nm and at higher wavelengths.

Methanol R2. *1053202.*

Complies with the requirements prescribed for *methanol R* and the following additional requirements.

Content: minimum 99.8 per cent.

Absorbance (2.2.25): maximum 0.17, determined at 225 nm using *water R* as the compensation liquid.

Methanol, hydrochloric. *1053203.*

Dilute 1.0 mL of *hydrochloric acid R1* to 100.0 mL with *methanol R*.

Methanol, aldehyde-free. *1053300.*
Dissolve 25 g of *iodine R* in 1 L of *methanol R* and pour the solution, with constant stirring, into 400 mL of *1 M sodium hydroxide*. Add 150 mL of *water R* and allow to stand for 16 h. Filter. Boil under a reflux condenser until the odour of iodoform disappears. Distil the solution by fractional distillation.
Aldehydes and ketones: maximum 0.001 per cent.

Methanol, anhydrous. *1053400.* [67-56-1].
Treat 1000 mL of *methanol R* with 5 g of *magnesium R*. If necessary initiate the reaction by adding 0.1 mL of *mercuric chloride solution R*. When the evolution of gas has ceased, distil the liquid and collect the distillate in a dry container protected from moisture.
Water (*2.5.12*): maximum 0.3 g/L.

DL-Methionine. *1129400.* [59-51-8].
See *DL-Methionine (0624)*.

L-Methionine. *1053500.* [63-68-3].
See *Methionine (1027)*.

(*RS*)-Methotrexate. $C_{20}H_{22}N_8O_5$. *1120200.* [60388-53-6].
(*RS*)-2-[4-[[(2,4-diaminopteridin-6-yl)methyl]-methylamino]benzoylamino]pentanedioic acid.
Content: minimum 96.0 per cent.
mp: about 195 °C.

Methoxychlor. $C_{16}H_{15}Cl_3O_2$. (M_r 345.7). *1129300.* [72-43-5].
1,1-(2,2,2-Trichloroethylidene)-bis(4-methoxybenzene).
Practically insoluble in water, freely soluble in most organic solvents.
bp: about 346 °C.
mp: 78 °C to 86 °C.
A suitable certified reference solution (10 ng/µL in iso-octane) may be used.

***trans*-2-Methoxycinnamaldehyde.** $C_{10}H_{10}O_2$. (M_r 162.2). *1129500.* [60125-24-8].

mp: 44 °C to 46 °C.

trans-2-Methoxycinnamaldehyde used in gas chromatography complies with the following additional test.

Assay. Gas chromatography (*2.2.28*) as prescribed in the monograph *Cassia oil (1496)*.

Content: minimum 96.0 per cent, calculated by the normalisation procedure.

(1*RS*)-1-(6-Methoxynaphthalen-2-yl)ethanol. $C_{13}H_{14}O_2$. (M_r 202.3). *1159600.* [77301-42-9]. 6-Methoxy-α-methyl-2-naphthalenemethanol.

White or almost white powder.

mp: about 113 °C.

1-(6-Methoxynaphthalen-2-yl)ethanone. $C_{13}H_{12}O_2$. (M_r 200.2). *1159700.* [3900-45-6]. 6′-Methoxy-2′-acetonaphthone.

White or almost white powder.

mp: about 108 °C.

6-Methoxy-2-naphthoic acid. $C_{12}H_{10}O_3$. (M_r 202.2). *1184200.* [2471-70-7]. 6-Methoxynaphthalene-2-carboxylic acid.

White or almost white, crystalline powder.

mp: 201 °C to 206 °C.

Methoxyphenylacetic acid. $C_9H_{10}O_3$. (M_r 166.2). *1053600.* [7021-09-2]. (*RS*)-2-Methoxy-2-phenylacetic acid.

White, crystalline powder or white or almost white crystals, sparingly soluble in water, freely soluble in ethanol (96 per cent).

mp: about 70 °C.

Methoxyphenylacetic reagent. *1053601.*

Dissolve 2.7 g of *methoxyphenylacetic acid R* in 6 mL of *tetramethylammonium hydroxide solution R* and add 20 mL of *anhydrous ethanol R*.

Storage: in a polyethylene container.

3-Methoxy-L-tyrosine. $C_{10}H_{13}NO_4H_2O$. (M_r 229.2). *1164400.* [200630-46-2].

Off-white or yellow powder.

Methyl acetate. $C_3H_6O_2$. (M_r 74.1). *1053700.* [79-20-9].

Clear, colourless liquid, soluble in water, miscible with ethanol (96 per cent).

d_{20}^{20}: about 0.933.

n_D^{20}: about 1.361.

bp: 56 °C to 58 °C.

Methyl 4-acetylbenzoate. $C_{10}H_{10}O_3$. (M_r 178.2). *1154100.* [3609-53-8].

mp: about 94 °C.

Methyl 4-acetylbenzoate reagent. *1154101.*

Dissolve 0.25 g of *methyl 4-acetylbenzoate R* in a mixture of 5 mL of *sulfuric acid R* and 85 mL of cooled *methanol R*.

Methylal. $C_3H_8O_2$. (M_r 76.1). *1173500.* [109-87-5]. Dimethoxymethane. Dioxapentane. Formaldehyde dimethyl acetal. Methylene dimethyl ether.

Clear, colourless, volatile, flammable liquid, soluble in water and miscible with ethanol (96 per cent).

d_{20}^{20}: about 0.860.

n_D^{20}: about 1.354.

bp: about 41 °C.

Methylal used in gas chromatography complies with the following additional test.

Content: minimum 99.5 per cent, determined by gas chromatography.

Methyl 4-aminobenzoate. $C_8H_9NO_2$. (M_r 151.2). *1175600.* [619-45-4].

mp: 110 °C to 113 °C.

4-Methylaminophenol sulfate. $C_{14}H_{20}N_2O_6S$. (M_r 344.4). *1053800.* [55-55-0].

Colourless crystals, very soluble in water, slightly soluble in ethanol (96 per cent).

mp: about 260 °C.

3-(Methylamino)-1-phenylpropan-1-ol. $C_{10}H_{15}NO$. (M_r 165.2). *1186400.* [42142-52-9].

White or almost white powder.

mp: 59 °C to 64 °C.

Methyl anthranilate. $C_8H_9NO_2$. (M_r 151.2). *1107300.* [134-20-3]. Methyl 2-aminobenzoate.

Colourless crystals or a colourless or yellowish liquid, soluble in water, freely soluble in ethanol (96 per cent).

bp: 134 °C to 136 °C.

mp: 24 °C to 25 °C.

Methyl anthranilate used in gas chromatography complies with the following additional test.

Assay. Gas chromatography (*2.2.28*) as prescribed in the monograph *Bitter-orange-flower oil (1175)*.

Test solution. The substance to be examined.

Content: minimum 95.0 per cent, calculated by the normalisation procedure.

Methyl arachidate. $C_{21}H_{42}O_2$. (M_r 326.6). *1053900.* [1120-28-1]. Methyl eicosanoate.

Content: minimum 98.0 per cent, determined by gas chromatography (*2.4.22*).

White or yellow, crystalline mass, soluble in ethanol (96 per cent) and in light petroleum.

mp: about 46 °C.

Methyl behenate. $C_{23}H_{46}O_2$. (M_r 354.6). *1107500.* [929-77-1]. Methyl docosanoate.

mp: 54 °C to 55 °C.

Methyl benzenesulfonate. $C_7H_8O_3S$. (M_r 172.2). *1159800.* [80-18-2].

Clear, colourless liquid.

bp: about 148 °C.

Methyl benzoate. $C_8H_8O_2$. (M_r 136.2). *1164500.* [93-58-3]. Benzoic acid, methyl ester.

Colourless liquid.

d_4^{20}: 1.088.

bp: about 200 °C.

Methylbenzothiazolone hydrazone hydrochloride. $C_8H_{10}ClN_3S,H_2O$. (M_r 233.7). *1055300.* [38894-11-0]. 3-Methylbenzothiazol-2(3*H*)-one hydrazone hydrochloride monohydrate.

Almost white or yellowish, crystalline powder.

mp: about 270 °C.

Suitability for determination of aldehydes. To 2 mL of *aldehyde-free methanol R* add 60 µL of a 1 g/L solution of *propionaldehyde R* in *aldehyde-free methanol R* and 5 mL of a 4 g/L solution of methylbenzothiazolone hydrazone hydrochloride. Mix. Allow to stand for 30 min. Prepare a blank omitting the propionaldehyde solution. Add 25.0 mL of a 2 g/L solution of *ferric chloride R* to the test solution and to the blank, dilute to 100.0 mL with *acetone R* and mix. The absorbance (*2.2.25*) of the test solution, measured at 660 nm using the blank as compensation liquid, is not less than 0.62.

(*R*)-(+)-α-Methylbenzyl isocyanate. C_9H_9NO. (M_r 147.2). *1171400.* [33375-06-3]. (+)-(*R*)-α-Methylbenzyl isocyanate. (+)-[(1*R*)-1-Isocyanatoethyl]benzene. (+)-(1*R*)-1-Phenylethyl isocyanate.

Content: minimum 99.0 per cent.

Colourless liquid.

d_{20}^{20}: about 1.045.

n_D^{20}: about 1.513.

bp: 55 °C to 56 °C at 2.5 mm Hg.

Enantiomeric purity: minimum 99.5.

Storage: at a temperature of 2 °C to 8 °C.

(*S*)-(−)-α-Methylbenzyl isocyanate. C_9H_9NO. (M_r 147.2). *1170200.* [14649-03-7]. (−)-(*S*)-α-Methylbenzyl isocyanate. (−)-[(1*S*)-1-Isocyanatoethyl]benzene. (−)-(1*S*)-1-Phenylethyl isocyanate.

Content: minimum 99.0 per cent.

Colourless liquid.

d_{20}^{20}: about 1.045.

n_D^{20}: about 1.514.

bp: 55 °C to 56 °C at 2.5 mm Hg.

Enantiomeric purity: minimum 99.5 per cent.

Storage: at a temperature of 2 °C to 8 °C.

NOTE: do not use the reagent if it is coloured.

2-Methylbutane. C_5H_{12}. (M_r 72.2). *1099500.* [78-78-4]. Isopentane.

Content: minimum 99.5 per cent of C_5H_{12}.

Very flammable colourless liquid.

d_{20}^{20}: about 0.621.

n_D^{20}: about 1.354.

bp: about 29 °C.

Water (2.5.12): maximum 0.02 per cent.

Residue on evaporation: maximum 0.0003 per cent.

Minimum transmittance (2.2.25) using *water R* as compensation liquid: 50 per cent at 210 nm, 85 per cent at 220 nm, 98 per cent at 240 nm and at higher wavelengths.

2-Methylbut-2-ene. C_5H_{10}. (M_r 70.1). *1055400.* [513-35-9].

Very flammable liquid, practically insoluble in water, miscible with ethanol (96 per cent).

bp: 37.5 °C to 38.5 °C.

Methyl caprate. *1054000.*

See *Methyl decanoate R*.

Methyl caproate. $C_7H_{14}O_2$. (M_r 130.2). *1120300.* [106-70-7]. Methyl hexanoate.

d_{20}^{20}: about 0.885.

n_D^{20}: about 1.405.

bp: 150 °C to 151 °C.

Methyl caprylate. $C_9H_{18}O_2$. (M_r 158.2). *1120400.* [111-11-5]. Methyl octanoate.

d_{20}^{20}: about 0.876.

n_D^{20}: about 1.417.

bp: 193 °C to 194 °C.

Methylcellulose 450. *1055500.* [9004-67-5].

See *Methylcellulose (0345)*.

Nominal viscosity: 450 mPa·s.

Methyl cinnamate. $C_{10}H_{10}O_2$. (M_r 162.2). *1099400.* [103-26-4].

Colourless crystals practically insoluble in water, soluble in ethanol (96 per cent).

n_D^{20}: about 1.56.

bp: about 260 °C.

mp: 34 °C to 36 °C.

Methyl decanoate. $C_{11}H_{22}O_2$. (M_r 186.3). *1054000.* [110-42-9].

Content: minimum 99.0 per cent.

Clear, colourless or yellow liquid, soluble in light petroleum.

d_{20}^{20}: 0.871 to 0.876.

n_D^{20}: 1.425 to 1.426.

Foreign substances. Gas chromatography (*2.2.28*), injecting equal volumes of each of the following:

A 0.02 g/L solution of the substance to be examined in *carbon disulfide R* (solution A), a 2 g/L solution of the substance to be examined in *carbon disulfide R* (solution B), and *carbon disulfide R* (solution C). Carry out the chromatographic procedure under the conditions of the test for butylated hydroxytoluene prescribed in the monograph *Wool fat (0134)*. The total area of any peaks, apart from the solvent peak and the principal peak, in the chromatogram obtained with solution B is less than the area of the principal peak in the chromatogram obtained with solution A.

Methyldopa, racemic. $C_{10}H_{13}NO_4$,1½H_2O. (M_r 238.2). *1175100.*

Mixture of equal volumes of (2*S*)- and (2*R*)-2-amino-3-(3,4-dihydroxyphenyl)-2-methylpropanoic acids.

3-*O*-Methyldopamine hydrochloride. $C_9H_{14}ClNO_2$. (M_r 203.7). *1055600.* [1477-68-5]. 4-(2-Aminoethyl)-2-methoxyphenol hydrochloride.

mp: 213 °C to 215 °C.

4-*O*-Methyldopamine hydrochloride. $C_9H_{14}ClNO_2$. (M_r 203.7). *1055700.* [645-33-0]. 5-(2-Aminoethyl)-2-methoxyphenol hydrochloride.

mp: 207 °C to 208 °C.

Methylenebisacrylamide. $C_7H_{10}N_2O_2$. (M_r 154.2). *1056000.* [110-26-9]. *N,N′*-Methylenebispropenamide.

Fine, white or almost white powder, slightly soluble in water, soluble in ethanol (96 per cent).

mp: 300 °C, with decomposition.

Methylene blue. $C_{16}H_{18}ClN_3S,xH_2O$. (M_r 319.9 for the anhydrous substance). *1055800.* [122965-43-9].

Schultz No. 1038.

Colour Index No. 52015.

3,7-Dimethylaminophenothiazin-5-ium chloride.

It occurs in different hydrated forms and may contain up to 22 per cent of water.

Dark-green or bronze, crystalline powder, freely soluble in water, soluble in ethanol (96 per cent).

Methylene chloride. CH_2Cl_2. (M_r 84.9). *1055900.* [75-09-2]. Dichloromethane.

Colourless liquid, sparingly soluble in water, miscible with ethanol (96 per cent).

bp: 39 °C to 42 °C.

Methylene chloride used in fluorimetry complies with the following additional test.

Fluorescence. Under irradiation at 365 nm, the fluorescence (*2.2.21*) measured at 460 nm in a 1 cm cell is not more intense than that of a solution containing 0.002 ppm of *quinine R* in *0.5 M sulfuric acid* measured in the same conditions.

Methylene chloride, acidified. *1055901.*

To 100 mL of *methylene chloride R* add 10 mL of *hydrochloric acid R*, shake, allow to stand and separate the two layers. Use the lower layer.

Methyl eicosenoate. $C_{21}H_{40}O_2$. (M_r 324.5). *1120500.* [2390-09-2]. Methyl (11*Z*)-eicos-11-enoate.

Methyl erucate. $C_{23}H_{44}O_2$. (M_r 352.6). *1146100.* [1120-34-9]. Methyl (13*Z*)-docos-13-enoate.

d_{20}^{20}: about 0.871.

n_D^{20}: about 1.456.

3-*O*-Methylestrone. $C_{19}H_{24}O_2$. (M_r 284.4). *1137000.* [1624-62-0]. 3-Methoxy-1,3,5(10)-estratrien-17-one.

White to yellowish-white powder.

$[\alpha]_D^{20}$: about + 157.

mp: about 173 °C.

Methyl ethyl ketone. C_4H_8O. (M_r 72.1). *1054100.* [78-93-3]. Ethyl methyl ketone. 2-Butanone.

Clear, colourless, flammable liquid, very soluble in water, miscible with ethanol (96 per cent).

d_{20}^{20}: about 0.81.

bp: 79 °C to 80 °C.

Methyleugenol. $C_{11}H_{14}O_2$. (M_r 178.2). *1182000.* [93-15-2]. 1,2-Dimethoxy-4-prop-2-enylbenzene.

Methyleugenol used in gas chromatography complies with the following additional test.

Assay. Gas chromatography (*2.2.28*) as prescribed in the monograph *Niaouli oil, cineole type (2468)*.

Content: minimum 97.0 per cent, calculated by the normalisation procedure.

Methyl green. $C_{26}H_{33}Cl_2N_3$. (M_r 458.5). *1054200.* [7114-03-6].

Schultz No. 788.

Colour Index No. 42585.

4-[[4-(Dimethyl-amino)phenyl][4-(dimethyliminio)cyclo-hexa-2,5-dienylidene]-methylphenyl]trimethylammonium dichloride.

Green powder, soluble in water, soluble in sulfuric acid giving a yellow solution turning green on dilution with water.

Methyl green-iodomercurate paper. *1054201.*

Immerse thin strips of suitable filter paper in a 40 g/L solution of *methyl green R* and allow to dry in air. Immerse the strips for 1 h in a solution containing 140 g/L of *potassium iodide R* and 200 g/L of *mercuric iodide R*. Wash with *distilled water R* until the washings are practically colourless and allow to dry in air.

Storage: protected from light; use within 48 h.

Methyl 4-hydroxybenzoate. *1055000.* [99-76-3].

See *Methyl parahydroxybenzoate R*.

1-Methylimidazole. $C_4H_6N_2$. (M_r 82.1). *1139700.* [616-47-7]. 1-Methyl-1*H*-imidazole.

Colourless or slightly yellowish liquid.

n_D^{20}: about 1.495.

bp: 195 °C to 197 °C.

Storage: in an airtight container, protected from light.

1-Methylimidazole R1. *1139701.*

Complies with the requirements prescribed for *1-methylimidazole R* with the following additional requirement.

Content: minimum 95.0 per cent.

2-Methylimidazole. $C_4H_6N_2$. (M_r 82.1). *1143400.* [693-98-1].

White or almost white, crystalline powder.

mp: about 145 °C.

Methyl iodide. CH_3I. (M_r 141.9). *1166400.* [74-88-4]. Iodomethane.

Methyl isobutyl ketone. $C_6H_{12}O$. (M_r 100.2). *1054300.* [108-10-1]. 4-Methyl-2-pentanone.

Clear, colourless liquid, slightly soluble in water, miscible with most organic solvents.

d_{20}^{20}: about 0.80.

bp: about 115 °C.

Distillation range (*2.2.11*). Distil 100 mL. The range of temperature of distillation from 1 mL to 95 mL of distillate does not exceed 4.0 °C.

Residue on evaporation: maximum 0.01 per cent, determined by evaporating on a water-bath and drying at 100-105 °C.

Methyl isobutyl ketone R1. *1054301.*

Shake 50 mL of freshly distilled *methyl isobutyl ketone R* with 0.5 mL of *hydrochloric acid R1* for 1 min. Allow the phases to separate and discard the lower phase. Prepare immediately before use.

Methyl isobutyl ketone R3. *1054302.*

Complies with the requirements for *methyl isobutyl ketone R* and with the following limits.

Cr: maximum 0.02 ppm.

Cu: maximum 0.02 ppm.

Pb: maximum 0.1 ppm.

Ni: maximum 0.02 ppm.

Sn: maximum 0.1 ppm.

Methyl laurate. $C_{13}H_{26}O_2$. (M_r 214.4). *1054400.* [111-82-0]. Methyl dodecanoate.

Content: minimum 98.0 per cent, determined by gas chromatography (*2.4.22*).

Colourless or yellow liquid, soluble in ethanol (96 per cent) and in light petroleum.

d_{20}^{20}: about 0.87.

n_D^{20}: about 1.431.

mp: about 5 °C.

Methyl lignocerate. $C_{25}H_{50}O_2$. (M_r 382.7). *1120600.* [2442-49-1]. Methyl tetracosanoate.

Flakes.

mp: about 58 °C.

Methyl linoleate. $C_{19}H_{34}O_2$. (M_r 294.5). *1120700.* [112-63-0]. Methyl (9*Z*,12*Z*)-octadeca-9,12-dienoate.

d_{20}^{20}: about 0.888.

n_D^{20}: about 1.466.

bp: 207 °C to 208 °C.

Methyl linolenate. $C_{19}H_{32}O_2$. (M_r 292.5). *1120800.* [301-00-8]. Methyl (9*Z*,12*Z*,15*Z*)-octadeca-9,12,15-trienoate. Methyl α-linolenate.

d_{20}^{20}: about 0.901.

n_D^{20}: about 1.471.

bp: about 207 °C.

Methyl γ-linolenate. $C_{19}H_{32}O_2$. (M_r 292.5). *1158400.* [16326-32-2]. Methyl (6*Z*,9*Z*,12*Z*)-octadeca-6,9,12-trienoate.

Content: minimum 99.0 per cent, determined by gas chromatography.

Methyl margarate. $C_{18}H_{36}O_2$. (M_r 284.5). *1120900.* [1731-92-6]. Methyl heptadecanoate.

White or almost white powder.

mp: 32 °C to 34 °C.

Methyl margarate used in the assay of total fatty acids in Saw palmetto fruit (1848) complies with the following additional test.

Assay. Gas chromatography (*2.2.28*) as prescribed in the monograph *Saw palmetto fruit (1848)*.

Content: minimum 97 per cent, calculated by the normalisation procedure.

Methyl methacrylate. $C_5H_8O_2$. (M_r 100.1). *1054500.* [80-62-6]. Methyl 2-methylprop-2-enoate.

Colourless liquid.

n_D^{20}: about 1.414.

bp: about 100 °C.

mp: about – 48 °C.

It contains a suitable stabilising reagent.

Methyl methanesulfonate. $C_2H_6O_3S$. (M_r 110.1). *1179500.* [66-27-3].

Clear, colourless or slightly yellow liquid.

Content: minimum 99.0 per cent.

Density: about 1.3 g/cm^3 (25 °C).

n_D^{20}: about 1.414.

bp: about 202 °C.

Methyl *N*-methylanthranilate. $C_9H_{11}NO_2$. (M_r 165.2). *1164600.* [85-91-6]. Methyl 2-(methylamino)benzoate.

Pale yellow liquid.

d_4^{20}: about 1.128.

n_D^{20}: about 1.579.

bp: 255 °C to 258 °C.

Methyl N-methylanthranilate used in gas chromatography complies with the following additional test.

Assay. Gas chromatography (*2.2.28*) as prescribed in the monograph *Mandarin oil (2355)*.

Test solution. The substance to be examined.

Content: minimum 97 per cent, calculated by the normalisation procedure.

Methyl myristate. $C_{15}H_{30}O_2$. (M_r 242.4). *1054600.* [124-10-7]. Methyl tetradecanoate.

Content: minimum 98.0 per cent, determined by gas chromatography (*2.4.22*).

Colourless or slightly yellow liquid, soluble in ethanol (96 per cent) and in light petroleum.

d_{20}^{20}: about 0.87.

n_D^{20}: about 1.437.

mp: about 20 °C.

Methyl nervonate. *1144800.* [2733-88-2].

See *Tetracos-15-enoic acid methyl ester R*.

Methyl oleate. $C_{19}H_{36}O_2$. (M_r 296.4). *1054700.* [112-62-9]. Methyl (9*Z*)-octadec-9-enoate.

Content: minimum 98.0 per cent, determined by gas chromatography (*2.4.22*).

Colourless or slightly yellow liquid, soluble in ethanol (96 per cent) and in light petroleum.

d_{20}^{20}: about 0.88.

n_D^{20}: about 1.452.

Methyl orange. $C_{14}H_{14}N_3NaO_3S$. (M_r 327.3). *1054800.* [547-58-0].

Schultz No. 176.

Colour Index No. 13025.
Sodium 4′-(dimethylamino)azobenzene-4-sulfonate.

Orange-yellow, crystalline powder, slightly soluble in water, practically insoluble in ethanol (96 per cent).

Methyl orange mixed solution. *1054801.*

Dissolve 20 mg of *methyl orange R* and 0.1 g of *bromocresol green R* in 1 mL of *0.2 M sodium hydroxide* and dilute to 100 mL with *water R*.

Colour change: pH 3.0 (orange) to pH 4.4 (olive-green).

Methyl orange solution. *1054802.*

Dissolve 0.1 g of *methyl orange R* in 80 mL of *water R* and dilute to 100 mL with *ethanol (96 per cent) R*.

Test for sensitivity. A mixture of 0.1 mL of the methyl orange solution and 100 mL of *carbon dioxide-free water R* is yellow. Not more than 0.1 mL of *1 M hydrochloric acid* is required to change the colour to red.

Colour change: pH 3.0 (red) to pH 4.4 (yellow).

Methyl palmitate. $C_{17}H_{34}O_2$. (M_r 270.5). *1054900.* [112-39-0]. Methyl hexadecanoate.

Content: minimum 98.0 per cent, determined by gas chromatography (*2.4.22*).

White or yellow, crystalline mass, soluble in ethanol (96 per cent) and in light petroleum.

mp: about 30 °C.

Methyl palmitoleate. $C_{17}H_{32}O_2$. (M_r 268.4). *1121000.* [1120-25-8]. Methyl (9*Z*)-hexadec-9-enoate.

d_{20}^{20}: about 0.876.

n_D^{20}: about 1.451.

Methyl parahydroxybenzoate. *1055000.* [99-76-3].

See *Methyl parahydroxybenzoate (0409)*.

Methyl pelargonate. $C_{10}H_{20}O_2$. (M_r 172.3). *1143500.* [1731-84-6]. Methyl nonanoate.

Clear, colourless liquid.

d_4^{20}: about 0.873.

n_D^{20}: about 1.422.

bp: 91 °C to 92 °C.

Methyl pelargonate used in the assay of total fatty acids in Saw palmetto fruit (1848) complies with the following additional test.

Assay. Gas chromatography (*2.2.28*) as prescribed in the monograph *Saw palmetto fruit (1848)*.

Content: minimum 98 per cent, calculated by the normalisation procedure.

2-Methylpentane. C_6H_{14}. (M_r 86.2). *1180400.* [107-83-5].

Isohexane.

d_{20}^{20}: about 0.653.

bp: about 60.0 °C.

Colourless, flammable liquid, practically insoluble in water, miscible with anhydrous ethanol.

3-Methylpentan-2-one. $C_6H_{12}O$. (M_r 100.2). *1141100.* [565-61-7].

Colourless, flammable liquid.

d_{20}^{20}: about 0.815.

n_D^{20}: about 1.400.

bp: about 118 °C

4-Methylpentan-2-ol. $C_6H_{14}O$. (M_r 102.2). *1114300.* [108-11-2].

Clear, colourless, volatile liquid.

d_4^{20}: about 0.802.

n_D^{20}: about 1.411.

bp: about 132 °C.

4-Methylphenazone. $C_{12}H_{14}N_2O$. (M_r 202.3). *1182100.* [56430-08-1]. 1,5-Dimethyl-2-(4-methylphenyl)-1,2-dihydro-3*H*-pyrazol-3-one.

Methylphenyloxazolylbenzene. $C_{26}H_{20}N_2O_2$. (M_r 392.5). *1056200.* [3073-87-8]. 1,4-Bis[2-(4-methyl-5-phenyl)-oxazolyl]benzene.

Fine, greenish-yellow powder with a blue fluorescence or small crystals, soluble in ethanol (96 per cent), sparingly soluble in xylene.

mp: about 233 °C.

Methylphenyloxazolylbenzene used for liquid scintillation is of a suitable analytical grade.

1-Methyl-4-phenyl-1,2,3,6-tetrahydropyridine. $C_{12}H_{15}N$. (M_r 173.3). *1137100.* [28289-54-5]. MPTP.

White or almost white, crystalline powder, slightly soluble in water.

mp: about 41 °C.

Methylpiperazine. $C_5H_{12}N_2$. (M_r 100.2). *1056300.* [109-01-3]. 1-Methylpiperazine.

Colourless liquid, miscible with water and with ethanol (96 per cent).

d_{20}^{20}: about 0.90.

n_D^{20}: about 1.466.

bp: about 138 °C.

4-(4-Methylpiperidin-1-yl)pyridine. $C_{11}H_{16}N_2$. (M_r 176.3). *1114400.* [80965-30-6].

Clear liquid.

n_D^{20}: about 1.565.

2-Methylpropanol. $C_4H_{10}O$. (M_r 74.1). *1056400.* [78-83-1]. Isobutyl alcohol. 2-Methylpropan-1-ol.

Clear colourless liquid, soluble in water, miscible with ethanol (96 per cent).

d_{20}^{20}: about 0.80.

n_D^{15}: 1.397 to 1.399.

bp: about 107 °C.

Distillation range (*2.2.11*). Not less than 96 per cent distils between 107 °C and 109 °C.

2-Methyl-2-propanol. $C_4H_{10}O$. (M_r 74.1). *1056500.* [75-65-0]. 1,1-Dimethyl ethyl alcohol. *tert*-Butyl alcohol.

Clear, colourless liquid or crystalline mass, soluble in water, miscible with ethanol (96 per cent).

Freezing point (*2.2.18*): about 25 °C.

Distillation range (*2.2.11*). Not less than 95 per cent distils between 81 °C and 83 °C.

(15*R*)-15-Methylprostaglandin $F_{2\alpha}$. $C_{21}H_{36}O_5$. (M_r 368.5). *1159900.* [35864-81-4]. (5*Z*)-7-[(1*R*,2*R*,3*R*,5*S*)-3,5-Dihydroxy-2-[(1*E*)-(3*R*)-3-hydroxy-3-methyloct-1-enyl]cyclopentyl]hept-5-enoic acid.

Available as a 10 g/L solution in *methyl acetate R*.

Storage: at a temperature below – 15 °C.

***N*-Methylpyrrolidine.** $C_5H_{11}N$. (M_r 85.2). *1164700.* [120-94-5].

Content: minimum 97.0 per cent.

bp: about 80 °C.

***N*-Methylpyrrolidone.** C_5H_9NO. (M_r 99.1). *1164800.* [872-50-4]. 1-Methylpyrrolidin-2-one.

d_{20}^{20}: about 1.028.

bp: about 202 °C.

mp: about – 24 °C.

Methyl red. $C_{15}H_{15}N_3O_2$. (M_r 269.3). *1055100.* [493-52-7].

Schultz No. 250.

Colour Index No. 13020.

2-(4-Dimethylamino-phenylazo)benzoic acid.

Dark-red powder or violet crystals, practically insoluble in water, soluble in ethanol (96 per cent).

Methyl red mixed solution. *1055101.*

Dissolve 0.1 g of *methyl red R* and 50 mg of *methylene blue R* in 100 mL of *ethanol (96 per cent) R*.

Colour change: pH 5.2 (red-violet) to pH 5.6 (green).

Methyl red solution. *1055102.*

Dissolve 50 mg in a mixture of 1.86 mL of *0.1 M sodium hydroxide* and 50 mL of *ethanol (96 per cent) R* and dilute to 100 mL with *water R*.

Test for sensitivity. To 0.1 mL of the methyl red solution add 100 mL of *carbon dioxide-free water R* and 0.05 mL of *0.02 M hydrochloric acid*. The solution is red. Not more than 0.1 mL of *0.02 M sodium hydroxide* is required to change the colour to yellow.

Colour change: pH 4.4 (red) to pH 6.0 (yellow).

Methyl salicylate. *1146200.* [119-36-8].

See *Methyl salicylate (0230)*

Methyl stearate. $C_{19}H_{38}O_2$. (M_r 298.5). *1055200.* [112-61-8]. Methyl octadecanoate.

Content: minimum 98.0 per cent, determined by gas chromatography (*2.4.22*).

White or yellow, crystalline mass, soluble in ethanol (96 per cent) and in light petroleum.

mp: about 38 °C.

Methylthymol blue. $C_{37}H_{40}N_2Na_4O_{13}S$. ($M_r$ 845). *1158500.* [1945-77-3]. Tetrasodium 2,2′,2″,2‴-[3*H*-2,1-benzoxathiol-3-ylidenebis[[6-hydroxy-2-methyl-5-(1-methylethyl)-3,1-phenylene]methylenenitrilo]]tetraacetate *S,S*-dioxide.

Produces a blue colour with calcium in alkaline solution.

Methylthymol blue mixture. *1158501.*

A mixture of 1 part of *methylthymol blue R* and 100 parts of *potassium nitrate R*.

***N*-Methyl-*m*-toluidine.** $C_8H_{11}N$. (M_r 121.2). *1175200.* [696-44-6]. *N*,3-Dimethylaniline. *N*,3-Dimethylbenzenamine. Methyl-*m*-tolylamine.

Content: minimum 97 per cent.

Methyl tricosanoate. $C_{24}H_{48}O_2$. (M_r 368.6). *1111500.* [2433-97-8]. Tricosanoic acid methyl ester.

Content: minimum 99.0 per cent.

White or almost white crystals, practically insoluble in water, soluble in hexane.

mp: 55 °C to 56 °C.

Methyl tridecanoate. $C_{14}H_{28}O_2$. (M_r 228.4). *1121100.* [1731-88-0].

Colourless or slightly yellow liquid, soluble in ethanol (96 per cent) and in light petroleum.

d_{20}^{20}: about 0.86.

n_D^{20}: about 1.441.

mp: about 6 °C.

Methyl 3,4,5-trimethoxybenzoate. $C_{11}H_{14}O_5$. (M_r 226.23). *1177200.* [1916-07-0].

***N*-Methyltrimethylsilyl-trifluoroacetamide.** $C_6H_{12}F_3NOSi$. (M_r 199.3). *1129600.* [24589-78-4]. 2,2,2-Trifluoro-*N*-methyl-*N*-(trimethylsilyl)acetamide.

n_D^{20}: about 1.380.

bp: 130 °C to 132 °C.

Minocycline hydrochloride. *1146300.*

See *Minocycline hydrochloride (1030)*.

Molecular sieve. *1056600.*

Molecular sieve composed of sodium aluminosilicate. It is available as beads with a pore size of 0.4 nm and with a diameter of 2 mm.

Molecular sieve for chromatography. *1129700.*

Molecular sieve composed of sodium aluminosilicate. The pore size is indicated after the name of the reagent in the tests where it is used. If necessary, the particle size is also indicated.

Molybdovanadic reagent. *1056700.*

In a 150 mL beaker, mix 4 g of finely powdered *ammonium molybdate R* and 0.1 g of finely powdered *ammonium vanadate R*. Add 70 mL of *water R* and grind the particles

using a glass rod. A clear solution is obtained within a few minutes. Add 20 mL of *nitric acid R* and dilute to 100 mL with *water R*.

Monodocosahexaenoin. $C_{25}H_{38}O_4$. (M_r 402.6). *1143600.* [124516-13-8]. Monoglyceride of docosahexaenoic acid (C22:6). Glycerol monodocosahexaenoate.
(all-4,7,10,13,16,19-hexaenoic acid, monoester with propane-1,2,3-triol.

Mordant black 11. $C_{20}H_{12}N_3NaO_7S$. (M_r 461.4). *1056800.* [1787-61-7].

Schultz No. 241.

Colour Index No. 14645.
Sodium 2-hydroxy-1-[(1-hydroxynaphth-2-yl)azo]-6-nitronaph-thalene-4-sulfonate. Eriochrome black.

Brownish-black powder, soluble in water and in ethanol (96 per cent).

Storage: in an airtight container, protected from light.

Mordant black 11 triturate. *1056801.*

Mix 1 g of *mordant black 11 R* with 99 g of *sodium chloride R*.

Test for sensitivity. Dissolve 50 mg in 100 mL of *water R*. The solution is brownish-violet. On addition of 0.3 mL of *ammonia R1* the solution turns blue. On the subsequent addition of 0.1 mL of a 10 g/L solution of *magnesium sulfate R*, it turns violet.

Storage: in an airtight container, protected from light.

Mordant black 11 triturate *1056802.*

Mix 1.0 g of *mordant black 11 R*, 0.4 g of *methyl orange R* and 100 g of *sodium chloride R*.

Morphine hydrochloride. *1056900.*

See *Morphine hydrochloride (0097)*.

Morpholine. C_4H_9NO. (M_r 87.1). *1057000.* [110-91-8]. Tetrahydro-1,4-oxazine.

Colourless, hygroscopic liquid, flammable, soluble in water and in ethanol (96 per cent).

d_{20}^{20}: about 1.01.

Distillation range (*2.2.11*). Not less than 95 per cent distils between 126 °C and 130 °C.

Storage: in an airtight container.

Morpholine for chromatography. *1057001.*

Complies with the requirements prescribed for *morpholine R* with the following additional requirement.

Content: minimum 99.5 per cent.

2-[*N*-Morpholino]ethanesulfonic acid. $C_6H_{13}NO_4S$. (M_r 195.2). *1186500.* [4432-31-9]. 2-(Morpholin-4-yl)sulfonic acid.

White or almost white, crystalline powder, soluble in water.

mp: about 300 °C.

Murexide. $C_8H_8N_6O_6,H_2O$. (M_r 302.2). *1137200.* 5,5′-Nitrilobis(pyrimidine-2,4,6(1*H*,3*H*,5*H*)-trione) monoammonium salt.

Brownish-red crystalline powder, sparingly soluble in cold water, soluble in hot water, practically insoluble in ethanol (96 per cent), soluble in solutions of potassium hydroxide or sodium hydroxide giving a blue colour.

Myosmine. $C_9H_{10}N_2$. (M_r 146.2). *1121200.* [532-12-7]. 3-(4,5-Dihydro-3*H*-pyrrol-2-yl)pyridine.

Colourless crystals.

mp: about 45 °C.

β-Myrcene. $C_{10}H_{16}$. (M_r 136.2). *1114500.* [123-35-3]. 7-Methyl-3-methylenocta-1,6-diene.

Oily liquid with a pleasant odour, practically insoluble in water, miscible with ethanol (96 per cent), soluble in glacial acetic acid. It dissolves in solutions of alkali hydroxides.

d_4^{20}: about 0.794.

n_D^{20}: about 1.470.

β-Myrcene used in gas chromatography complies with the following additional test.

Assay. Gas chromatography (*2.2.28*) as prescribed in the monograph *Peppermint oil (0405)*.

Test solution. The substance to be examined.

Content: minimum 90.0 per cent, calculated by the normalisation procedure.

Myristic acid. $C_{14}H_{28}O_2$. (M_r 228.4). *1143700.* [544-63-8]. Tetradecanoic acid.

Colourless or white or almost white flakes.

mp: about 58.5 °C.

Myristic acid used in the assay of total fatty acids in Saw palmetto fruit (1848) complies with the following additional test.

Assay. Gas chromatography (*2.2.28*) as prescribed in the monograph *Saw palmetto fruit (1848)*.

Content: minimum 97 per cent, calculated by the normalisation procedure.

Myristicine. $C_{11}H_{12}O_3$. (M_r 192.2). *1099600.* [607-91-0]. 5-Allyl-1-methoxy-2,3-methylenedioxybenzene. 4-Methoxy-6-(prop-2-enyl)-1,3-benzodioxole.

Oily colourless liquid, practically insoluble in water, slightly soluble in anhydrous ethanol, miscible with toluene and with xylene.

d_{20}^{20}: about 1.144.

n_D^{20}: about 1.540.

bp: 276 °C to 277 °C.

mp: about 173 °C.

Chromatography. Thin-layer chromatography (*2.2.27*) as prescribed in the monograph *Star anise (1153)*; the chromatogram shows only one principal spot.

Myristicine used in gas chromatography complies with the following additional test.

Assay. Gas chromatography (*2.2.28*) as prescribed in the monograph *Nutmeg oil (1552)*.

Content: minimum 95.0 per cent, calculated by the normalisation procedure.

Storage: protected from light.

Myristyl alcohol. $C_{14}H_{30}O$. (M_r 214.4). *1121300.* [112-72-1]. Tetradecan-1-ol.

d_{20}^{20}: about 0.823.

mp: 38 °C to 40 °C.

Myrtillin. $C_{21}H_{21}ClO_{12}$. (M_r 500.8). *1172300.* [6906-38-3]. Delphinidin 3-*O*-glucoside chloride.

Naphthalene. $C_{10}H_8$. (M_r 128.2). *1057100.* [91-20-3].

White or almost white crystals, practically insoluble in water, soluble in ethanol (96 per cent).

mp: about 80 °C.

Naphthalene used for liquid scintillation is of a suitable analytical grade.

Naphtharson. $C_{16}H_{11}AsN_2Na_2O_{10}S_2$. ($M_r$ 576.3). *1121400.* [3688-92-4]. Thorin. Disodium 4-[(2-arsonophenyl)azo]-3-hydroxynaphthalene-2,7-disulfonate.

Red powder, soluble in water.

Naphtharson solution. *1121401.*

A 0.58 g/L solution.

Test for sensitivity. To 50 mL of *ethanol (96 per cent) R*, add 20 mL of *water R*, 1 mL of *0.05 M sulfuric acid* and 1 mL of the naphtharson solution. Titrate with *0.025 M barium perchlorate*; the colour changes from orange-yellow to orange-pink.

Storage: protected from light; use within 1 week.

α-Naphthol. $C_{10}H_8O$. (M_r 144.2). *1057300.* [90-15-3]. 1-Naphthol.

White or almost white, crystalline powder or colourless or white or almost white crystals, darkening on exposure to light, slightly soluble in water, freely soluble in ethanol (96 per cent).

mp: about 95 °C.

Storage: protected from light.

α-Naphthol solution. *1057301.*

Dissolve 0.10 g of *α-naphthol R* in 3 mL of a 150 g/L solution of *sodium hydroxide R* and dilute to 100 mL with *water R*. Prepare immediately before use.

β-Naphthol. $C_{10}H_8O$. (M_r 144.2). *1057400.* [135-19-3]. 2-Naphthol.

White or slightly pink plates or crystals, very slightly soluble in water, very soluble in ethanol (96 per cent).

mp: about 122 °C.

Storage: protected from light.

β-Naphthol solution. *1057401.*

Dissolve 5 g of freshly recrystallised *β-naphthol R* in 40 mL of *dilute sodium hydroxide solution R* and dilute to 100 mL with *water R*. Prepare immediately before use.

β-Naphthol solution R1. *1057402.*

Dissolve 3.0 mg of *β-naphthol R* in 50 mL of *sulfuric acid R* and dilute to 100.0 mL with the same acid. Use the recently prepared solution.

Naphtholbenzein. $C_{27}H_{18}O_2$. (M_r 374.4). *1057600.* [145-50-6]. α-Naphtholbenzein. 4-[(4-Hydroxynaphthalen-1-yl)(phenyl)methylidene] naphthalen-1(4*H*)-one.

Brownish-red powder or shiny brownish-black crystals, practically insoluble in water, soluble in ethanol (96 per cent) and in glacial acetic acid.

Naphtholbenzein solution. *1057601.*

A 2 g/L solution in *anhydrous acetic acid R*.

Test for sensitivity. To 50 mL of *glacial acetic acid R* add 0.25 mL of the naphtholbenzein solution. The solution is brownish-yellow. Not more than 0.05 mL of *0.1 M perchloric acid* is required to change the colour to green.

Naphthol yellow. $C_{10}H_5N_2NaO_5$. (M_r 256.2). *1136600.* 2,4-Dinitro-1-naphthol, sodium salt.

Orange-yellow powder or crystals, freely soluble in water, slightly soluble in ethanol (96 per cent).

Naphthol yellow S. $C_{10}H_4N_2Na_2O_8S$. (M_r 358.2). *1143800.* [846-70-8].

Colour Index No. 10316.
8-Hydroxy-5,7-dinitro-2-naphthalenesulfonic acid disodium salt. Disodium 5,7-dinitro-8-oxidonaphthalene-2-sulfonate.

Yellow or orange-yellow powder, freely soluble in water.

1-Naphthylacetic acid. $C_{12}H_{10}O_2$. (M_r 186.2). *1148400.* [86-87-3]. (Naphthalen-1-yl)acetic acid.

White or yellow crystalline powder, very slightly soluble in water, freely soluble in acetone.

mp: about 135 °C.

Naphthylamine. $C_{10}H_9N$. (M_r 143.2). *1057700.* [134-32-7]. 1-Naphthylamine.

White or almost white, crystalline powder, turning pink on exposure to light and air, slightly soluble in water, freely soluble in ethanol (96 per cent).

mp: about 51 °C.

Storage: protected from light.

Naphthylethylenediamine dihydrochloride. $C_{12}H_{16}Cl_2N_2$. (M_r 259.2). *1057800.* [1465-25-4]. *N*-(1-Naphthyl)ethylene-diamine dihydrochloride.

It may contain methanol of crystallisation.

White or yellowish-white powder, soluble in water, slightly soluble in ethanol (96 per cent).

Naphthylethylenediamine dihydrochloride solution. *1057801.*

Dissolve 0.1 g of *naphthylethylenediamine dihydrochloride R* in *water R* and dilute to 100 mL with the same solvent. Prepare immediately before use.

Naringin. $C_{27}H_{32}O_{14}$. (M_r 580.5). *1137300.* [10236-47-2]. 7-[[2-*O*-(6-Deoxy-α-L-mannopyranosyl)-β-D-glucopyranosyl]oxy]-5-hydroxy-2-(4-hydroxyphenyl)-2,3-dihydro-4*H*-chromen-4-one.

White or almost white crystalline powder, slightly soluble in water, soluble in methanol and in dimethylformamide.

mp: about 171 °C.

Absorbance (*2.2.25*). Naringin dissolved in a 5 g/L solution of *dimethylformamide R* in *methanol R* shows an absorption maximum at 283 nm.

Neohesperidin. $C_{28}H_{34}O_{15}$. (M_r 610.6). *1182200.* [13241-33-3]. Hesperetin-7-neohesperidoside. (2*S*)-7-[[2-*O*-(6-Deoxy-α-L-mannopyranosyl)-β-D-glucopyranosyl]oxy]-5-hydroxy-2-(3-hydroxy-4-methoxyphenyl)-2,3-dihydro-4*H*-1-benzopyran-4-one.

***trans*-Nerolidol.** $C_{15}H_{26}O$. (M_r 222.4). *1107900.* [40716-66-3]. 3,7,11-Trimethyldodeca-1,6,10-trien-3-ol.

Slightly yellow liquid, slight odour of lily and lily of the valley, practically insoluble in water and in glycerol, miscible with ethanol (96 per cent).

d_{20}^{20}: about 0.876.

n_D^{20}: about 1.479.

bp_{12}: 145 °C to 146 °C.

trans-Nerolidol used in gas chromatography complies with the following additional test.

Assay. Gas chromatography (*2.2.28*) as prescribed in the monograph *Bitter-orange-flower oil (1175).*

Test solution. The substance to be examined.

Content: minimum 90.0 per cent, calculated by the normalisation procedure.

Neryl acetate. $C_{12}H_{20}O_2$. (M_r 196.3). *1108000.* [141-12-8]. (*Z*)-3,7-Dimethylocta-2,6-dienyl acetate.

Colourless, oily liquid.

d_{20}^{20}: about 0.907.

n_D^{20}: about 1.460.

bp_{25}: 134 °C.

Neryl acetate used in gas chromatography complies with the following additional test.

Assay. Gas chromatography (*2.2.28*) as prescribed in the monograph *Bitter-orange-flower oil (1175).*

Test solution. The substance to be examined.

Content: minimum 93.0 per cent, calculated by the normalisation procedure.

Nickel-aluminium alloy. *1058100.*

Contains 48 per cent to 52 per cent of aluminium (Al; A_r 26.98) and 48 per cent to 52 per cent of nickel (Ni; A_r 58.70).

Before use, reduce to a fine powder (180) (*2.9.12*).

It is practically insoluble in water and soluble in mineral acids.

Nickel-aluminium alloy (halogen-free). *1118100.*

Contains 48 per cent to 52 per cent of aluminium (Al; A_r 26.98) and 48 per cent to 52 per cent of nickel (Ni; A_r 58.71).

Fine, grey powder, practically insoluble in water, soluble in mineral acids with formation of salts.
Chlorides: maximum 10 ppm.

Dissolve 0.400 g in 40 mL of a mixture of 67 volumes of *sulfuric acid R* and 33 volumes of *dilute nitric acid R*. Evaporate the solution nearly to dryness, dissolve the residue in *water R* and dilute to 20.0 mL with the same solvent. To one half-aliquot of the solution, add 1.0 mL of *0.1 M silver nitrate*. Filter after 15 min and add 0.2 mL of sodium chloride solution (containing 10 µg of chlorides per millilitre) to the filtrate. After 5 min the solution is more opalescent than a mixture of the second half-aliquot of the solution with 1.0 mL of *0.1 M silver nitrate*.

Nickel chloride. $NiCl_2$. (M_r 129.6). *1057900.* [7718-54-9]. Nickel chloride, anhydrous.

Yellow, crystalline powder, very soluble in water, soluble in ethanol (96 per cent). It sublimes in the absence of air and readily absorbs ammonia. The aqueous solution is acid.

Nickel nitrate hexahydrate. $Ni(NO_3)_2,6H_2O$. (M_r 290.8). *1175300.* [13478-00-7].

Nickel sulfate. $NiSO_4,7H_2O$. (M_r 280.9). *1058000.* [10101-98-1]. Nickel sulfate heptahydrate.

Green, crystalline powder or crystals, freely soluble in water, slightly soluble in ethanol (96 per cent).

Nicotinamide-adenine dinucleotide. $C_{21}H_{27}N_7O_{14}P_2$. (M_r 663). *1108100.* [-84-9]. NAD^+.

White or almost white powder, very hygroscopic, freely soluble in water.

Nicotinamide-adenine dinucleotide solution. *1108101.*

Dissolve 40 mg of *nicotinamide-adenine dinucleotide R* in *water R* and dilute to 10 mL with the same solvent. Prepare immediately before use.

Nicotinic acid. *1158600.* [59-67-6].

See *Nicotinic acid (0459)*.

Nile blue A. $C_{20}H_{21}N_3O_5S$. (M_r 415.5). *1058200.* [3625-57-8].

Schultz No. 1029.

Colour Index No. 51180.
5-Amino-9-(diethylamino)benzo[*a*]phenoxazinylium hydrogen sulfate.

Green, crystalline powder with a bronze lustre, sparingly soluble in ethanol (96 per cent), in glacial acetic acid and in pyridine.

Absorbance (*2.2.25*). A 0.005 g/L solution in *ethanol (50 per cent V/V) R* shows an absorption maximum at 640 nm.

Nile blue A solution. *1058201.*

A 10 g/L solution in *anhydrous acetic acid R*.

Test for sensitivity. To 50 mL of *anhydrous acetic acid R* add 0.25 mL of the Nile blue A solution. The solution is blue. On the addition of 0.1 mL of *0.1 M perchloric acid*, the colour changes to blue-green.

Colour change: pH 9.0 (blue) to pH 13.0 (red).

Ninhydrin. $C_9H_4O_3,H_2O$. (M_r 178.1). *1058300.* [485-47-2]. 1,2,3-Indanetrione monohydrate.

White or very pale yellow, crystalline powder, soluble in water and in ethanol (96 per cent).

Storage: protected from light.

Ninhydrin and stannous chloride reagent. *1058301.*

Dissolve 0.2 g of *ninhydrin R* in 4 mL of hot *water R*, add 5 mL of a 1.6 g/L solution of *stannous chloride R*, allow to stand for 30 min, then filter and store at a temperature of 2 °C to 8 °C. Immediately before use dilute 2.5 mL of the solution with 5 mL of *water R* and 45 mL of *2-propanol R*.

Ninhydrin and stannous chloride reagent R1. *1058302.*

Dissolve 4 g of *ninhydrin R* in 100 mL of *ethylene glycol monomethyl ether R*. Shake gently with 1 g of *cation-exchange resin R* (300 µm to 840 µm) and filter (solution A). Dissolve 0.16 g of *stannous chloride R* in 100 mL of *buffer solution pH 5.5 R* (solution B). Immediately before use, mix equal volumes of each solution.

Ninhydrin solution. *1058303.*

A 2 g/L solution of *Ninhydrin R* in a mixture of 5 volumes of *dilute acetic acid R* and 95 volumes of *butanol R*.

Ninhydrin solution R1. *1058304.*

Dissolve 1.0 g of *ninhydrin R* in 50 mL of *ethanol (96 per cent) R* and add 10 mL of *glacial acetic acid R*.

Ninhydrin solution R2. *1058305.*

Dissolve 3 g of *ninhydrin R* in 100 mL of a 45.5 g/L solution of *sodium metabisulfite R*.

Ninhydrin solution R3. *1058306.*

A 4 g/L solution in a mixture of 5 volumes of *anhydrous acetic acid R* and 95 volumes of *butanol R*.

Ninhydrin solution R4. *1058307.*

A 3 g/L solution of *ninhydrin R* in a mixture of 5 volumes of *glacial acetic acid R* and 95 volumes of *2-propanol R*.

Nitrazepam. *1143900.* [146-22-5].

See *Nitrazepam (0415)*.

Nitric acid. HNO_3. (M_r 63.0). *1058400.* [7697-37-2].

Content: 63.0 per cent *m/m* to 70.0 per cent *m/m*.

Clear, colourless or almost colourless liquid, miscible with water.

d_{20}^{20}: 1.384 to 1.416.

A 10 g/L solution is strongly acid and gives the reaction of nitrates (*2.3.1*).

Appearance. Nitric acid is clear (*2.2.1*) and not more intensely coloured than reference solution Y_6 (*2.2.2, Method II*).

Chlorides (*2.4.4*): maximum 0.5 ppm.

To 5 g add 10 mL of *water R* and 0.3 mL of *silver nitrate solution R2* and allow to stand for 2 min protected from light. Any opalescence is not more intense than that of a standard prepared in the same manner using 13 mL of *water R*, 0.5 mL of *nitric acid R*, 0.5 mL of *chloride standard solution (5 ppm Cl) R* and 0.3 mL of *silver nitrate solution R2*.

Sulfates (*2.4.13*): maximum 2 ppm.

Evaporate 10 g to dryness with 0.2 g of *sodium carbonate R*. Dissolve the residue in 15 mL of *distilled water R*. Prepare the standard using a mixture of 2 mL of *sulfate standard solution (10 ppm SO_4) R* and 13 mL of *distilled water R*.

Arsenic (*2.4.2, Method A*): maximum 0.02 ppm.

Gently heat 50 g with 0.5 mL of *sulfuric acid R* until white fumes begin to evolve. To the residue add 1 mL of a 100 g/L solution of *hydroxylamine hydrochloride R* and dilute to 2 mL with *water R*. Prepare the standard using 1.0 mL of *arsenic standard solution (1 ppm As) R*.

Iron (*2.4.9*): maximum 1 ppm.

Dissolve the residue from the determination of sulfated ash in 1 mL of *dilute hydrochloric acid R* and dilute to 50 mL with *water R*. Dilute 5 mL of this solution to 10 mL with *water R*.

Heavy metals (*2.4.8*): maximum 2 ppm.

Dilute 10 mL of the solution prepared for the limit test for iron to 20 mL with *water R*. 12 mL of the solution complies with test A. Prepare the reference solution using *lead standard solution (2 ppm Pb) R*.

Sulfated ash: maximum 0.001 per cent.

Carefully evaporate 100 g to dryness. Moisten the residue with a few drops of *sulfuric acid R* and heat to dull red.

Assay. To 1.50 g add about 50 mL of *water R* and titrate with *1 M sodium hydroxide*, using 0.1 mL of *methyl red solution R* as indicator.

1 mL of *1 M sodium hydroxide* is equivalent to 63.0 mg of HNO_3.

Storage: protected from light.

Nitric acid, cadmium- and lead-free. *1058401.*

Complies with the requirements prescribed for *nitric acid R* and with the following additional test.

Test solution. To 100 g add 0.1 g of *anhydrous sodium carbonate R* and evaporate to dryness. Dissolve the residue in *water R* heating slightly, and dilute to 50.0 mL with the same solvent.

Cadmium: maximum 0.1 ppm.

Atomic absorption spectrometry (*2.2.23, Method II*).

Source: cadmium hollow-cathode lamp.

Wavelength: 228.8 nm.

Atomisation device: air-acetylene or air-propane flame.

Lead: maximum 0.1 ppm.

Atomic absorption spectrometry (*2.2.23, Method II*).

Source: lead hollow-cathode lamp.

Wavelength: 283.3 nm or 217.0 nm.

Atomisation device: air-acetylene flame.

Nitric acid, dilute. *1058402.*

Contains about 125 g/L of HNO_3 (M_r 63.0).

Dilute 20 g of *nitric acid R* to 100 mL with *water R*.

Nitric acid, dilute R1. *1058407.*

Dilute 40 g of *nitric acid R* to 100 mL with *water R*.

Nitric acid, dilute R2. *1058409.*

Dilute 30 g of *nitric acid R* to 100 mL with *water R*.

Nitric acid, heavy metal-free. *1058404.*

Complies with the requirements prescribed for *nitric acid R* with the following maximum contents of heavy metals.

As: 0.005 ppm.

Cd: 0.005 ppm.

Cu: 0.001 ppm.

Fe: 0.02 ppm.

Hg: 0.002 ppm.

Ni: 0.005 ppm.

Pb: 0.001 ppm.

Zn: 0.01 ppm.

Nitric acid, lead-free. *1058403.*

Complies with the requirements prescribed for *Nitric acid R* with the following additional test.

Lead: maximum 0.1 ppm.

Atomic absorption spectrometry (*2.2.23, Method II*).

Test solution. To 100 g add 0.1 g of *anhydrous sodium carbonate R* and evaporate to dryness. Dissolve the residue in *water R*, heating slightly, and dilute to 50.0 mL with the same solvent.

Source: lead hollow-cathode lamp.

Wavelength: 283.3 nm or 217.0 nm.

Atomisation device: air-acetylene flame.

Nitric acid, lead-free R1. *1058405.*

Nitric acid R containing not more than 1 µg/kg of lead.

Nitric acid, lead-free, dilute. *1058406.*

Dilute 5 g of *lead-free nitric acid R1* to 100 mL with *deionised distilled water R*.

Nitric acid, nickel-free. *1058408.*

Complies with the requirements prescribed for *nitric acid R* with the following additional requirement.

Nickel: maximum 0.005 ppm.

Nitric acid, fuming. *1058500.* [52583-42-3].

Clear, slightly yellowish liquid, fuming on contact with air.

d_{20}^{20}: about 1.5.

Nitrilotriacetic acid. $C_6H_9NO_6$. (M_r 191.1). *1137400.* [139-13-9].

White or almost white crystalline powder, practically insoluble in water and in most organic solvents.

mp: about 240 °C, with decomposition.

Nitroaniline. $C_6H_6N_2O_2$. (M_r 138.1). *1058600.* [100-01-6]. 4-Nitroaniline.

Bright yellow, crystalline powder, very slightly soluble in water, sparingly soluble in boiling water, soluble in ethanol (96 per cent), forms water-soluble salts with strong mineral acids.

mp: about 147 °C.

Nitrobenzaldehyde. $C_7H_5NO_3$. (M_r 151.1). *1058700.* [552-89-6]. 2-Nitrobenzaldehyde.

Yellow needles, slightly soluble in water, freely soluble in ethanol (96 per cent), volatile in steam.

mp: about 42 °C.

Nitrobenzaldehyde paper. *1058701.*

Dissolve 0.2 g of *nitrobenzaldehyde R* in 10 mL of a 200 g/L solution of *sodium hydroxide R*. Use the solution within 1 h. Immerse the lower half of a slow filter paper strip 10 cm long and 0.8-1 cm wide. Absorb the excess reagent between two sheets of filter paper. Use within a few minutes of preparation.

Nitrobenzaldehyde solution. *1058702.*

Add 0.12 g of powdered *nitrobenzaldehyde R* to 10 mL of *dilute sodium hydroxide solution R*; allow to stand for 10 min shaking frequently and filter. Prepare immediately before use.

Nitrobenzene. $C_6H_5NO_2$. (M_r 123.1). *1058800.* [98-95-3].

Colourless or very slightly yellow liquid, practically insoluble in water, miscible with ethanol (96 per cent).

bp: about 211 °C.

Dinitrobenzene. To 0.1 mL add 5 mL of *acetone R*, 5 mL of *water R* and 5 mL of *strong sodium hydroxide solution R*. Shake and allow to stand. The upper layer is almost colourless.

4-Nitrobenzoic acid. $C_7H_5NO_4$. (M_r 167.1). *1144000.* [62-23-7].

Yellow crystals.

mp: about 240 °C.

Nitrobenzoyl chloride. $C_7H_4ClNO_3$. (M_r 185.6). *1058900.* [122-04-3]. 4-Nitrobenzoyl chloride.

Yellow crystals or a crystalline mass, decomposing in moist air, completely soluble in sodium hydroxide solution giving a yellowish-orange colour.

mp: about 72 °C.

Nitrobenzyl chloride. $C_7H_6ClNO_2$. (M_r 171.6). *1059000.* [100-14-1]. 4-Nitrobenzyl chloride.

Pale-yellow crystals, lachrymatory, practically insoluble in water, very soluble in ethanol (96 per cent).

4-(4-Nitrobenzyl)pyridine. $C_{12}H_{10}N_2O_2$. (M_r 214.2). *1101900.* [1083-48-3].

Yellow powder.

mp: about 70 °C.

Nitrochromic reagent. *1059100.*

Dissolve 0.7 g of *potassium dichromate R* in *nitric acid R* and dilute to 100 mL with the same acid.

Nitroethane. $C_2H_5NO_2$. (M_r 75.1). *1059200.* [79-24-3].

Clear, oily, colourless liquid.

bp: about 114 °C.

Nitrofurantoin. *1099700.* [67-20-9].

See *Nitrofurantoin (0101)*.

Nitrogen. N_2. (M_r 28.01). *1059300.* [7727-37-9].

Nitrogen, washed and dried.

Nitrogen gas mixture. *1136900.*

Nitrogen R containing 1 per cent *V/V* of each of the following gases: *carbon dioxide R2*, *carbon monoxide R1* and *oxygen R1*.

Nitrogen, oxygen-free. *1059600.*

Nitrogen R which has been freed from oxygen by passing it through *alkaline pyrogallol solution R*.

Nitrogen R1. N_2. (M_r 28.01). *1059400.* [7727-37-9].

Content: minimum 99.999 per cent *V/V*.

Carbon monoxide: less than 5 ppm.

Oxygen: less than 5 ppm.

Nitrogen dioxide. NO_2. (M_r 46.01). *1179600.* [10102-44-0].

Content: minimum 98.0 per cent *V/V*.

Nitrogen for chromatography. N_2. (M_r 28.01). *1059500.* [7727-37-9].

Content: minimum 99.95 per cent *V/V*.

Nitrogen monoxide. NO. (M_r 30.01). *1108300.*

Content: minimum 98.0 per cent *V/V*.

Nitromethane. CH_3NO_2. (M_r 61.0). *1059700.* [75-52-5].

Clear, colourless, oily liquid, slightly soluble in water, miscible with ethanol (96 per cent).

d_{20}^{20}: 1.132 to 1.134.

n_D^{20}: 1.381 to 1.383.

Distillation range (*2.2.11*). Not less than 95 per cent distils between 100 °C and 103 °C.

Nitro-molybdovanadic reagent. *1060100.*

Solution A. Dissolve 10 g of *ammonium molybdate R* in *water R*, add 1 mL of *ammonia R* and dilute to 100 mL with *water R*.

Solution B. Dissolve 2.5 g of *ammonium vanadate R* in hot *water R*, add 14 mL of *nitric acid R* and dilute to 500 mL with *water R*.

To 96 mL of *nitric acid R* add 100 mL of solution A and 100 mL of solution B and dilute to 500 mL with *water R*.

4-Nitrophenol. $C_6H_5NO_3$. (M_r 139.1). *1146400.* [100-02-7]. *p*-Nitrophenol.

Content: minimum 95 per cent.

Colourless or slightly yellow powder, sparingly soluble in water and in methanol.

mp: about 114 °C.

3-Nitrosalicylic acid. $C_7H_5NO_5$. (M_r 183.1). *1184300.* [85-38-1]. 2-Hydroxy-3-nitrobenzoic acid.

Yellowish crystals, slightly soluble in water, freely soluble in ethanol (96 per cent).

mp: 142 °C to 147 °C.

***N*-Nitrosodiethanolamine.** $C_4H_{10}N_2O_3$. (M_r 134.1). *1129800.* [1116-54-7]. 2,2′-(Nitrosoimino)diethanol.

Yellow liquid, miscible with anhydrous ethanol.

n_D^{20}: about 1.485.

bp: about 125 °C.

***N*-Nitrosodiisopropanolamine.** $C_6H_{14}N_2O_3$. (M_r 162.2). *1176500.* [53609-64-6]. 1,1′-(Nitrosoimino)bispropan-2-ol.

bp: 122-124 °C.

Nitrosodipropylamine. $C_6H_{14}N_2O$. (M_r 130.2). *1099900.* [621-64-7]. Dipropylnitrosamine.

Liquid, soluble in anhydrous ethanol and in strong acids.

d_{20}^{20}: about 0.915.

bp: about 78 °C.

Appropriate grade for chemiluminescence determination.

Nitrosodipropylamine solution. *1099901.*

Inject 78.62 g of *anhydrous ethanol R* through the septum of a vial containing *nitrosodipropylamine R*. Dilute 1/100 in *anhydrous ethanol R* and place 0.5 mL aliquots in crimp-sealed vials.

Storage: in the dark at 5 °C.

Nitrotetrazolium blue. $C_{40}H_{30}Cl_2N_{10}O_6$. ($M_r$ 818). *1060000.* [298-83-9]. 3,3′-(3,3′-Dimethoxy-4,4′-diphenylene)di[2-(4-nitrophenyl)-5-phenyl-2*H*-tetrazolium] dichloride. *p*-Nitro-tetrazolium blue.

Crystals, soluble in methanol, giving a clear, yellow solution.

mp: about 189 °C, with decomposition.

Nitrous oxide. N_2O. (M_r 44.01). *1108500.*

Content: minimum 99.99 per cent *V/V*.

Nitrogen monoxide: less than 1 ppm.

Carbon monoxide: less than 1 ppm.

Nonivamide. $C_{17}H_{27}NO_3$. (M_r 293.4). *1148500.* [2444-46-4]. *N*-[(4-Hydroxy-3-methoxyphenyl)methyl]nonanamide.

White or almost white, crystalline powder, practically insoluble in cold water, freely soluble in anhydrous ethanol.

Nonivamide used in the test for nonivamide in the monograph Capsicum (1859) complies with the following additional test.

Assay. Liquid chromatography (*2.2.29*) as prescribed in the monograph *Capsicum (1859)*.

Content: minimum 98.0 per cent, calculated by the normalisation procedure.

Nonylamine. $C_9H_{21}N$. (M_r 143.3). *1139800.* [112-20-9]. Nonan-1-amine. 1-Aminononane.

Corrosive, colourless, clear liquid.

d_4^{20}: about 0.788.

n_D^{20}: about 1.433.

Nordazepam. $C_{15}H_{11}ClN_2O$. (M_r 270.7). *1060200.* [1088-11-5]. 7-Chloro-2,3-dihydro-5-phenyl-1*H*-1,4-benzodiazepin-2-one.

White or pale yellow, crystalline powder, practically insoluble in water, slightly soluble in ethanol (96 per cent).

mp: about 216 °C.

DL-Norleucine. $C_6H_{13}NO_2$. (M_r 131.2). *1060300.* [616-06-8]. (*RS*)-2-Aminohexanoic acid.

Shiny crystals, sparingly soluble in water and in ethanol (96 per cent), soluble in acids.

Noscapine hydrochloride. *1060500.* [912-60-7].
See *Noscapine hydrochloride (0515).*

Ochratoxin A solution. *1175700.*
50 µg/mL solution of (2*S*)-2-([[(3*R*)-5-chloro-8-hydroxy-3-methyl-1-oxo-3,4-dihydro-1*H*-2-benzopyran-7-yl]carbonyl]amino)-3-phenylpropanoic acid (ochratoxin A) in a mixture of 1 volume of *acetic acid R* and 99 volumes of *benzene R*.

Octadecyl [3-[3,5-bis(1,1-dimethylethyl)-4-hydroxyphenyl]-propionate]. $C_{35}H_{62}O_3$. (M_r 530.9). *1060600.* [2082-79-3]. Octadecyl 3-(3,5-di-*tert*-butyl-4-hydroxyphenyl)propionate.
White or slightly yellowish, crystalline powder, practically insoluble in water, very soluble in acetone and in hexane, slightly soluble in methanol.
mp: 49 °C to 55 °C.

Octanal. $C_8H_{16}O$. (M_r 128.2). *1150400.* [124-13-0]. Octyl aldehyde.
Oily, colourless liquid. Practically insoluble in water.
Octanal used in gas chromatography complies with the following additional test.
Assay. Gas chromatography (*2.2.28*) as prescribed in the monograph *Sweet orange oil (1811).*
Content: minimum 99 per cent, calculated by the normalisation procedure.

Octane. C_8H_{18}. (M_r 114.2). *1166500.* [111-65-9].

Octanol. $C_8H_{18}O$. (M_r 130.2). *1060700.* [111-87-5]. Octan-1-ol. Caprylic alcohol.
Colourless liquid, practically insoluble in water, miscible with ethanol (96 per cent).
d_{20}^{20}: about 0.828.
bp: about 195 °C.

3-Octanone. $C_8H_{16}O$. (M_r 128.2). *1114600.* [106-68-3]. Octan-3-one. Ethylpentylketone.
Colourless liquid with a characteristic odour.
d_{20}^{20}: about 0.822.
n_D^{20}: about 1.415.
bp: about 167 °C.
3-Octanone used in gas chromatography complies with the following additional test.
Assay. Gas chromatography (*2.2.28*) as prescribed in the monograph *Lavender oil (1338).*
Test solution. The substance to be examined.
Content: minimum 98.0 per cent, calculated by the normalisation procedure.

Octoxinol 10. $C_{34}H_{62}O_{11}$ (average). (M_r 647). *1060800.* [9002-93-1]. α-[4-(1,1,3,3-Tetramethylbutyl)phenyl]-ω-hydroxypoly-(oxyethylene).
Clear, pale-yellow, viscous liquid, miscible with water, with acetone and with ethanol (96 per cent), soluble in toluene.
Storage: in an airtight container.

Octreotide acetate. $C_{49}H_{66}N_{10}O_{10}S_2,xC_2H_4O_2$. *1182900.* [79517-01-4]. (Acetate-free peptide: M_r 1019. [83150-76-9]). D-Phenylalanyl-L-cysteinyl-L-phenylalanyl-D-tryptophyl-L-lysyl-L-threonyl-*N*-[(1*R*,2*R*)-2-hydroxy-1-(hydroxymethyl)propyl]-L-cysteinamide cyclic (2→7)-disulfide acetate. It contains a variable quantity of acetic acid.
White or almost white powder, freely soluble in water and acetic acid.
Content: minimum 96.0 per cent.

Octylamine. $C_8H_{19}N$. (M_r 129.2). *1150500.* [111-86-4]. Octan-1-amine.
Colourless liquid.
d_{20}^{20}: about 0.782.
bp: 175 °C to 179 °C.

Oleamide. $C_{18}H_{35}NO$. (M_r 281.5). *1060900.* (9*Z*)-Octadec-9-enoamide.
Yellowish or white powder or granules, practically insoluble in water, very soluble in methylene chloride, soluble in anhydrous ethanol.
mp: about 80 °C.

Oleanolic acid. $C_{30}H_{48}O_3$. (M_r 456.7). *1183000.* [508-02-1]. 3β-Hydroxyolean-12-en-28-oic acid. Astrantiagenin C.

Oleic acid. $C_{18}H_{34}O_2$. (M_r 282.5). *1144100.* [112-80-1]. (9*Z*)-Octadec-9-enoic acid.
Clear, colourless liquid, practically insoluble in water.
d_4^{20}: about 0.891.
n_D^{20}: about 1.459.
mp: 13 °C to 14 °C.
Oleic acid used in the assay of total fatty acids in the monograph Saw palmetto fruit (1848) complies with the following additional test.
Assay. Gas chromatography (*2.2.28*) as prescribed in the monograph *Saw palmetto fruit (1848).*
Content: minimum 98 per cent, calculated by the normalisation procedure.

Oleuropein. $C_{25}H_{32}O_{13}$. (M_r 540.5). *1152900.* [32619-42-4]. 2-(3,4-Dihydroxyphenyl)ethyl[(2*S*,3*E*,4*S*)-3-ethylidene-2-(β-D-glucopyranosyloxy)-5-(methoxycarbonyl)-3,4-dihydro-2*H*-pyran-4-yl]acetate.
Powder, soluble in methanol.
Oleuropein used in Olive leaf (1878) complies with the following test.
Assay. Liquid chromatography (*2.2.29*) as prescribed in the monograph *Olive leaf (1878).*
Content: minimum 80 per cent, calculated by the normalisation procedure.

Oleyl alcohol. $C_{18}H_{36}O$. (M_r 268.5). *1156000.* [143-28-2]. (9*Z*)-Octadec-9-en-1-ol.
bp: about 207 °C.
n_D^{20}: 1.460.
Content: minimum 85 per cent.

Olive oil. *1061000.* [8001-25-0].
See *Olive oil, virgin (0518).*

Oracet blue 2R. $C_{20}H_{14}N_2O_2$. (M_r 314.3). *1061100.* [4395-65-7].
Colour Index No. 61110.
1-Amino-4-(phenylamino)anthracene-9,10-dione.
mp: about 194 °C.

Orcinol. $C_7H_8O_2,H_2O$. (M_r 142.2). *1108700.* [6153-39-5]. 5-Methylbenzene-1,3-diol monohydrate.
Crystalline powder, sensitive to light.
bp: about 290 °C.
mp: 58 °C to 61 °C.

Organosilica polymer, amorphous, octadecylsilyl. *1144200.*
Synthetic, spherical hybrid particles, containing both inorganic (silica) and organic (organosiloxanes) components, chemically modified at the surface by trifunctionally bonded octadecylsilyl groups.

Organosilica polymer, amorphous, octadecylsilyl, end-capped. *1178600.*
Synthetic, spherical hybrid particles, containing both inorganic (silica) and organic (organosiloxanes) components, chemically modified at the surface by trifunctionally bonded octadecylsilyl groups. To minimise any interaction with basic

compounds, it is carefully end-capped to cover most of the remaining silanol groups. The particle size is indicated after the name of the reagent in the tests where it is used.

Organosilica polymer, amorphous, polar-embedded octadecylsilyl, end-capped. *1150600.*

Synthetic, spherical hybrid particles containing both inorganic (silica) and organic (organosiloxanes) components, chemically modified at the surface by the bonding of polar embedded octadecylsilyl groups. To minimise any interaction with basic compounds, it is carefully end-capped to cover most of the remaining silanol groups. The particle size is indicated after the name of the reagent in the tests where it is used.

Organosilica polymer, amorphous, propyl-2-phenylsilyl, end-capped. *1178100.*

Synthetic, spherical hybrid particles containing both inorganic (silica) and organic (organosiloxanes) components, chemically modified at the surface by the bonding of propyl-2-phenylsilyl groups. To minimise any interaction with basic compounds, it is carefully end-capped to cover most of the remaining silanol groups. The particle size is indicated after the name of the reagent in the tests where it is used.

Organosilica polymer for mass spectrometry, amorphous, octadecylsilyl, end-capped. *1164900.*

Synthetic, spherical hybrid particles containing both inorganic (silica) and organic (organosiloxanes) components. To minimise any interaction with basic compounds, it is carefully end-capped to cover most of the remaining silanol groups. The particle size is indicated after the name of the reagent in the tests where it is used.

Osmium tetroxide. OsO_4. (M_r 254.2). *1061200.* [20816-12-0].

Light-yellow needles or a yellow, crystalline mass, hygroscopic, light sensitive, soluble in water and in ethanol (96 per cent).

Storage: in an airtight container.

Osmium tetroxide solution. *1061201.*

A 2.5 g/L solution in *0.05 M sulfuric acid*.

Osthole. $C_{15}H_{16}O_3$. (M_r 244.3). *1180500.* [484-12-8]. 7-Methoxy-8-(3-methylbut-2-enyl)-2*H*-1-benzopyran-2-one. 7-Methoxy-8-isopentenylcoumarin.

Oxalic acid. $C_2H_2O_4,2H_2O$. (M_r 126.1). *1061400.* [6153-56-6]. Ethanedioic acid dihydrate.

White or almost white crystals, soluble in water, freely soluble in ethanol (96 per cent).

Oxalic acid and sulfuric acid solution. *1061401.*

A 50 g/L solution of *oxalic acid R* in a cooled mixture of equal volumes of *sulfuric acid R* and *water R*.

Oxazepam. *1144300.* [604-75-1].

See *Oxazepam (0778)*.

Ox brain, acetone-dried. *1061300.*

Cut into small pieces a fresh ox brain previously freed from vascular and connective tissue. Place in *acetone R* for preliminary dehydration. Complete the dehydration by pounding in a mortar 30 g of this material with successive quantities, each of 75 mL, of *acetone R* until a dry powder is obtained after filtration. Dry at 37 °C for 2 h or until the odour of acetone is no longer present.

2,2′-Oxybis(*N*,*N*-dimethylethylamine). $C_8H_{20}N_2O$. (M_r 160.3). *1141200.* [3033-62-3]. Bis(2-dimethylaminoethyl) ether.

Colourless, corrosive liquid.

d_{20}^{20}: about 0.85.

n_D^{20}: about 1.430.

Oxygen. O_2. (M_r 32.00). *1108800.*

Content: minimum 99.99 per cent *V/V*.

Nitrogen and argon: less than 100 ppm.

Carbon dioxide: less than 10 ppm.

Carbon monoxide: less than 5 ppm.

Oxygen R1. O_2. (M_r 32.00). *1137600.*

Content: minimum 99 per cent *V/V*.

Oxytetracycline hydrochloride. *1146500.*

See *Oxytetracycline hydrochloride (0198)*.

Palladium. Pd. (A_r 106.4). *1114700.* [7440-05-3].

Grey white metal, soluble in hydrochloric acid.

Palladium chloride. $PdCl_2$. (M_r 177.3). *1061500.* [7647-10-1].

Red crystals.

mp: 678 °C to 680 °C.

Palladium chloride solution. *1061501.*

Dissolve 1 g of *palladium chloride R* in 10 mL of warm *hydrochloric acid R*. Dilute the solution to 250 mL with a mixture of equal volumes of *dilute hydrochloric acid R* and *water R*. Dilute this solution immediately before use with 2 volumes of *water R*.

Palmitic acid. $C_{16}H_{32}O_2$. (M_r 256.4). *1061600.* [57-10-3]. Hexadecanoic acid.

White or almost white, crystalline scales, practically insoluble in water, freely soluble in hot ethanol (96 per cent).

mp: about 63 °C.

Chromatography. Thin-layer chromatography (*2.2.27*) as prescribed in the monograph *Chloramphenicol palmitate (0473)*; the chromatogram shows only one principal spot.

Palmitic acid used in the assay of total fatty acids in the monograph Saw palmetto fruit (1848) complies with the following additional test.

Assay. Gas chromatography (*2.2.28*) as prescribed in the monograph *Saw palmetto fruit (1848)*.

Content: minimum 98 per cent, calculated by the normalisation procedure.

Palmitoleic acid. $C_{16}H_{30}O_2$. (M_r 254.4). *1144400.* [373-49-9]. (9*Z*)-Hexadec-9-enoic acid.

Clear, colourless liquid.

bp: about 162 °C.

Palmitoleic acid used in the assay of total fatty acids in Saw palmetto fruit (1848) complies with the following additional test.

Assay. Gas chromatography (*2.2.28*) as prescribed in the monograph *Saw palmetto fruit (1848)*.

Content: minimum 98 per cent, calculated by the normalisation procedure.

Palmityl alcohol. $C_{16}H_{34}O$. (M_r 242.4). *1156100.* [36653-82-4]. Hexadecan-1-ol. Cetyl alcohol.

mp: about 48 °C.

Content: minimum 96 per cent.

Pancreas powder. *1061700.*

See *Pancreas powder (0350)*.

Papain. *1150700.* [9001-73-4].

A proteolytic enzyme obtained from the latex of the green fruit and leaves of *Carica papaya* L.

Papaverine hydrochloride. *1061800.* [61-25-6].

See *Papaverine hydrochloride (0102)*.

Paper chromatography performance test solutions. *1150800.*

Test solution (A). Sodium pertechnetate (^{99m}Tc) injection (fission) (0124) or *Sodium pertechnetate (^{99m}Tc) injection (non-fission) (0283)*.

Test solution (B). In a closed vial mix 100 µL of a 5 g/L solution of *stannous chloride R* in *0.05 M hydrochloric acid* and 100 MBq to 200 MBq of *Sodium pertechnetate (^{99m}Tc) injection (fission) (0124)* or *Sodium pertechnetate (^{99m}Tc) injection (non-fission) (0283)* in a volume not exceeding 2 mL.

Paper for chromatography. *1150900.*

Pure cellulose grade thin paper with a smooth surface and a thickness of about 0.2 mm.

Chromatographic separation. To 2 strips of *paper for chromatography R* apply separately 2-5 µL of test solution (a) and test solution (b) of *paper chromatography performance test solutions R*. Develop over a pathlength of 3/4 of the paper height, using a mixture of equal volumes of *methanol R* and *water R*. Allow to dry and determine the distribution of radioactivity using a suitable detector. The paper is not satisfactory, unless the chromatogram obtained with test solution (a) shows a single radioactivity spot with an R_F value in the range 0.8-1.0 and the chromatogram obtained with test solution (b) shows a single radioactivity spot at the application point (R_F value in the range 0.0-0.1).

Paracetamol. *1061900.* [103-90-2].

See *Paracetamol (0049)*.

Paracetamol, 4-aminophenol-free. *1061901.*

Recrystallise *paracetamol R* from *water R* and dry *in vacuo* at 70 °C; repeat the procedure until the product complies with the following test: dissolve 5 g of the dried substance in a mixture of equal volumes of *methanol R* and *water R* and dilute to 100 mL with the same mixture of solvents. Add 1 mL of a freshly prepared solution containing 10 g/L of *sodium nitroprusside R* and 10 g/L of *anhydrous sodium carbonate R*, mix and allow to stand for 30 min protected from light. No blue or green colour is produced.

Paraffin, liquid. *1062000.* [8042-47-5].

See *Liquid paraffin (0239)*.

Paraffin, white soft. *1062100.*

A semi-liquid mixture of hydrocarbons obtained from petroleum and bleached, practically insoluble in water and in ethanol (96 per cent), soluble in *light petroleum R1*, the solution sometimes showing a slight opalescence.

Paraldehyde. *1151000.* [123-63-7].

See *Paraldehyde (0351)*.

Pararosaniline hydrochloride. $C_{19}H_{18}ClN_3$. (M_r 323.8). *1062200.* [569-61-9].

Schultz No. 779.

Colour Index No. 42500.
4-[Bis(4-aminophenyl)methylene]cyclohexa-2,5-dieniminium chloride.

Bluish-red, crystalline powder, slightly soluble in water, soluble in anhydrous ethanol. Solutions in water and anhydrous ethanol are deep-red; solutions in sulfuric acid and in hydrochloric acid are yellow.

mp: about 270 °C, with decomposition.

Decolorised pararosaniline solution. *1062201.*

To 0.1 g of *pararosaniline hydrochloride R* in a ground-glass-stoppered flask add 60 mL of *water R* and a solution of 1.0 g of *anhydrous sodium sulfite R* or 2.0 g of *sodium sulfite R* or 0.75 g of *sodium metabisulfite R* in 10 mL of *water R*. Slowly and with stirring add 6 mL of *dilute hydrochloric acid R*, stopper the flask and continue stirring until dissolution is complete. Dilute to 100 mL with *water R*. Allow to stand for 12 h before use.

Storage: protected from light.

Parthenolide. $C_{15}H_{20}O_3$. (M_r 248.3). *1129900.* [20554-84-1]. (4*E*)-(1a*R*,7a*S*,10a*S*,10b*S*)-1a,5-Dimethyl-8-methylene-2,3,6,7,7a,8,10a,10b-octahydro-oxireno[9,10]cyclodeca[1,2-*b*]furan-9(1a*H*)-one. (*E*)-(5*S*,6*S*)-4,5-Epoxygermacra-1(10),11(13)-dieno-12(6)-lactone.

White or almost white, crystalline powder, very slightly soluble in water, very soluble in methylene chloride, soluble in methanol.

$[\alpha]_D^{22}$: – 71.4, determined on a 2.2 g/L solution in *methylene chloride R*.

mp: 115 °C to 116 °C.

Absorbance (*2.2.25*). A 0.01 g/L solution in *ethanol (96 per cent) R* shows an absorption maximum at 214 nm.

Assay. Liquid chromatography (*2.2.29*) as prescribed in the monograph *Feverfew (1516)*, at the concentration of the reference solution.

Content: minimum 90 per cent, calculated by the normalisation procedure.

Penicillinase solution. *1062300.*

Dissolve 10 g of casein hydrolysate, 2.72 g of *potassium dihydrogen phosphate R* and 5.88 g of *sodium citrate R* in 200 mL of *water R*, adjust to pH 7.2 with a 200 g/L solution of *sodium hydroxide R* and dilute to 1000 mL with *water R*. Dissolve 0.41 g of *magnesium sulfate R* in 5 mL of *water R* and add 1 mL of a 1.6 g/L solution of *ferrous ammonium sulfate R* and sufficient *water R* to produce 10 mL. Sterilise both solutions by heating in an autoclave, cool, mix, distribute in shallow layers in conical flasks and inoculate with *Bacillus cereus* (NCTC 9946). Allow the flasks to stand at 18 °C to 37 °C until growth is apparent and then maintain at 35 °C to 37 °C for 16 h, shaking constantly to ensure maximum aeration. Centrifuge and sterilise the supernatant by filtration through a membrane filter. 1.0 mL of penicillinase solution contains not less than 0.4 microkatals (corresponding to the hydrolysis of not less than 500 mg of benzylpenicillin to benzylpenicilloic acid per hour) at 30 °C and pH 7, provided that the concentration of benzylpenicillin does not fall below the level necessary for enzyme saturation.

The Michaelis constant for benzylpenicillin of the penicillinase in penicillinase solution is approximately 12 µg/mL.

Sterility (*2.6.1*). It complies with the test for sterility.

Storage: at a temperature between 0 °C and 2 °C for 2 to 3 days. When freeze-dried and kept in sealed ampoules, it may be stored for several months.

Pentaerythrityl tetrakis[3-(3,5-di(1,1-dimethylethyl)-4-hydroxyphenyl)propionate]. $C_{73}H_{108}O_{12}$. (M_r 1178). *1062400.* [6683-19-8]. Pentaerythrityl tetrakis[3-(3,5-di-*tert*-butyl-4-hydroxyphenyl) propionate]. 2,2′-Bis(hydroxymethyl)propane-1,3-diol tetrakis[3-[3,5-di(1,1-dimethylethyl)-4-hydroxyphenyl]]propionate.

White or slightly yellow, crystalline powder, practically insoluble in water, very soluble in acetone, soluble in methanol, slightly soluble in hexane.

mp: 110 °C to 125 °C.

α-form: 120 °C to 125 °C.

β-form: 110 °C to 115 °C.

Pentafluoropropanoic acid. $C_3HF_5O_2$. (M_r 164.0). *1151100.* [422-64-0].

Clear, colourless liquid.

d_{20}^{20}: about 1.561.

n_D^{20}: about 1.284.

bp: about 97 °C.

Pentafluoropropionic anhydride. $C_6F_{10}O_3$. (M_r 310.0). *1177300.* [356-42-3]. Pentafluoropropanoic anhydride.

Pentane. C_5H_{12}. (M_r 72.2). *1062500.* [109-66-0].
Clear, colourless, flammable liquid, very slightly soluble in water, miscible with acetone and with anhydrous ethanol.
d_{20}^{20}: about 0.63.
n_D^{20}: about 1.359.
bp: about 36 °C.
Pentane used in spectrophotometry complies with the following additional test.
Minimum transmittance (*2.2.25*) using *water R* as compensation liquid: 20 per cent at 200 nm, 50 per cent at 210 nm, 85 per cent at 220 nm, 93 per cent at 230 nm, 98 per cent at 240 nm.

1,2-Pentanediol. $C_5H_{12}O_2$. (M_r 104.2). *1155800.* [5343-92-0]. (2*RS*)-Pentane-1,2-diol.
d_4^{20}: about 0.971.
n_D^{20}: about 1.439.
bp: about 201 °C.

Pentanol. $C_5H_{12}O$. (M_r 88.1). *1062600.* [71-41-0]. Pentan-1-ol.
Colourless liquid, sparingly soluble in water, miscible with ethanol (96 per cent).
n_D^{20}: about 1.410.
bp: about 137 °C.

3-Pentanone. $C_5H_{10}O$. (M_r 86.13). *1173600.* [96-22-0]. Pentan-3-one. Diethyl ketone.

***tert*-Pentyl alcohol.** $C_5H_{12}O$. (M_r 88.1). *1062700.* [75-85-4]. *tert*-Amyl alcohol. 2-Methyl-2-butanol.
Volatile, flammable liquid, freely soluble in water, miscible with ethanol (96 per cent) and with glycerol.
d_{20}^{20}: about 0.81.
Distillation range (*2.2.11*). Not less than 95 per cent distils between 100 °C and 104 °C.
Storage: protected from light.

Pentetic acid. $C_{14}H_{23}N_3O_{10}$. (M_r 393.3). *1183100.* [67-43-6]. [[(Carboxymethyl)imino]bis(ethylenenitrilo)]tetraacetic acid. White or almost white powder, slightly soluble in water.
mp: 219 °C to 220 °C, with decomposition.

Pepsin powder. *1062800.* [9001-75-6].
See *Pepsin powder (0682).*

Peptide *N*-glycosidase F. *1186600.* [83534-39-8].
Peptide-N^4-(*N*-acetyl-β-glucosaminyl)asparagine amidase (EC 3.5.1.52). PNGase F.

Perchloric acid. $HClO_4$. (M_r 100.5). *1062900.* [7601-90-3].
Content: 70.0 per cent *m/m* to 73.0 per cent *m/m*.
Clear, colourless liquid, miscible with water.
d_{20}^{20}: about 1.7.
Assay. To 2.50 g add 50 mL of *water R* and titrate with *1 M sodium hydroxide*, using 0.1 mL of *methyl red solution R* as indicator.
1 mL of *1 M sodium hydroxide* is equivalent to 100.5 mg of $HClO_4$.

Perchloric acid solution. *1062901.*
Dilute 8.5 mL of *perchloric acid R* to 100 mL with *water R*.

Periodic acetic acid solution. *1063000.*
Dissolve 0.446 g of *sodium periodate R* in 2.5 mL of a 25 per cent *V/V* solution of *sulfuric acid R*. Dilute to 100.0 mL with *glacial acetic acid R*.

Periodic acid. H_5IO_6. (M_r 227.9). *1108900.* [10450-60-9].
Crystals, freely soluble in water and soluble in ethanol (96 per cent).
mp: about 122 °C.

Permethrin. $C_{21}H_{20}Cl_2O_3$. (M_r 391.3). *1130000.* [52645-53-1].
mp: 34 °C to 35 °C.
A suitable certified reference solution (10 ng/μL in cyclohexane) may be used.

Peroxide test strips. *1147800.*
Use commercial test strips with a suitable scale in the range from 0 ppm to 25 ppm peroxide.

Perylene. $C_{20}H_{12}$. (M_r 252.3). *1130100.* [198-55-0]. Dibenz[*de*,*kl*]anthracene.
Orange powder.
mp: about 279 °C.

Petroleum, light. *1063100.* [8032-32-4]. Petroleum ether 50-70 °C.
Clear, colourless, flammable liquid without fluorescence, practically insoluble in water, miscible with ethanol (96 per cent).
d_{20}^{20}: 0.661 to 0.664.
Distillation range (*2.2.11*): 50 °C to 70 °C.

Petroleum, light R1. *1063101.* Petroleum ether 40-60 °C.
Complies with the requirements prescribed for *light petroleum R*, with the following modifications.
d_{20}^{20}: 0.630 to 0.656.
Distillation range (*2.2.11*): 40 °C to 60 °C. It does not become cloudy at 0 °C.

Petroleum, light R2. *1063102.* Petroleum ether 30-40 °C.
Complies with the requirements prescribed for *light petroleum R*, with the following modifications.
d_{20}^{20}: 0.620 to 0.630.
Distillation range (*2.2.11*): 30 °C to 40 °C. It does not become cloudy at 0 °C.

Petroleum, light R3. *1063103.* Petroleum ether 100-120 °C.
Complies with the requirements prescribed for *light petroleum R*, with the following modifications.
d_{20}^{20}: about 0.720.
Distillation range (*2.2.11*): 100 °C to 120 °C.
Water (*2.5.12*): maximum 0.03 per cent.

Petroleum, light R4. *1063104.* Petroleum ether 80-100 °C.
Complies with the requirements prescribed for *light petroleum R*, with the following modifications.
d_{20}^{20}: about 0.70.
Distillation range (*2.2.11*): 80 °C to 100 °C.

pH indicator strip. *1178900.*
Plastic strip containing multiple segments of different dye-impregnated papers allowing visual determination of pH in the prescribed range by comparison with a master chart.

α-Phellandrene. $C_{10}H_{16}$. (M_r 136.2). *1130400.* [4221-98-1]. (*R*)-5-Isopropyl-2-methyl-cyclohexa-1,3-diene. (–)-*p*-Mentha-1,5-diene.
n_D^{20}: about 1.471.
bp: 171 °C to 174 °C.
α-Phellandrene used in gas chromatography complies with the following additional test.
Assay. Gas chromatography (*2.2.28*) as prescribed in the monograph *Eucalyptus oil (0390)*.
Test solution. The substance to be examined.
Content: 95.0 per cent, calculated by the normalisation procedure.

Phenanthrene. $C_{14}H_{10}$. (M_r 178.2). *1063200.* [85-01-8].
White or almost white crystals, practically insoluble in water, sparingly soluble in ethanol (96 per cent).
mp: about 100 °C.

Phenanthroline hydrochloride. $C_{12}H_9ClN_2,H_2O$. (M_r 234.7). *1063300.* [3829-86-5]. 1,10-Phenanthroline hydrochloride monohydrate.

White or almost white, crystalline powder, freely soluble in water, soluble in ethanol (96 per cent).

mp: about 215 °C, with decomposition.

Phenazone. *1063400.* [60-80-0].

See *Phenazone (0421)*.

Phenol. *1063500.* [108-95-2].

See *Phenol (0631)*.

Phenolphthalein. $C_{20}H_{14}O_4$. (M_r 318.3). *1063700.* [77-09-8]. 3,3-Bis(4-hydroxyphenyl)-3*H*-isobenzofuran-1-one.

White or yellowish-white powder, practically insoluble in water, soluble in ethanol (96 per cent).

Phenolphthalein paper. *1063704.*

Immerse strips of filter paper for a few minutes in *phenolphthalein solution R*. Allow to dry.

Phenolphthalein solution. *1063702.*

Dissolve 0.1 g of *phenolphthalein R* in 80 mL of *ethanol (96 per cent) R* and dilute to 100 mL with *water R*.

Test for sensitivity. To 0.1 mL of the phenolphthalein solution add 100 mL of *carbon dioxide-free water R*. The solution is colourless. Not more than 0.2 mL of *0.02 M sodium hydroxide* is required to change the colour to pink.

Colour change: pH 8.2 (colourless) to pH 10.0 (red).

Phenolphthalein solution R1. *1063703.*

A 10 g/L solution in *ethanol (96 per cent) R*.

Phenol red. *1063600.* [143-74-8].

Bright red or dark red, crystalline powder, very slightly soluble in water, slightly soluble in ethanol (96 per cent).

Phenol red solution. *1063601.*

Dissolve 0.1 g of *phenol red R* in a mixture of 2.82 mL of *0.1 M sodium hydroxide* and 20 mL of *ethanol (96 per cent) R* and dilute to 100 mL with *water R*.

Test for sensitivity. Add 0.1 mL of the phenol red solution to 100 mL of *carbon dioxide-free water R*. The solution is yellow. Not more than 0.1 mL of *0.02 M sodium hydroxide* is required to change the colour to reddish-violet.

Colour change: pH 6.8 (yellow) to pH 8.4 (reddish-violet).

Phenol red solution R2. *1063603.*

Solution A. Dissolve 33 mg of *phenol red R* in 1.5 mL of *dilute sodium hydroxide solution R* and dilute to 100 mL with *water R*.

Solution B. Dissolve 25 mg of *ammonium sulfate R* in 235 mL of *water R*; add 105 mL of *dilute sodium hydroxide solution R* and 135 mL of *dilute acetic acid R*.

Add 25 mL of solution A to solution B. If necessary, adjust the pH of the mixture to 4.7.

Phenol red solution R3. *1063604.*

Solution A. Dissolve 33 mg of *phenol red R* in 1.5 mL of *dilute sodium hydroxide solution R* and dilute to 50 mL with *water R*.

Solution B. Dissolve 50 mg of *ammonium sulfate R* in 235 mL of *water R*; add 105 mL of *dilute sodium hydroxide solution R* and 135 mL of *dilute acetic acid R*.

Add 25 mL of solution A to solution B; if necessary, adjust the pH of the mixture to 4.7.

Phenoxyacetic acid. $C_8H_8O_3$. (M_r 152.1). *1063800.* [122-59-8]. 2-Phenoxyethanoic acid.

Almost white crystals, sparingly soluble in water, freely soluble in ethanol (96 per cent), and in glacial acetic acid.

mp: about 98 °C.

Chromatography. Thin-layer chromatography (*2.2.27*) as prescribed in the monograph *Phenoxymethylpenicillin (0148)*; the chromatogram shows only one principal spot.

2-Phenoxyaniline. $C_{12}H_{11}NO$. (M_r 185.2). *1165500.* [2688-84-8]. 2-Phenoxybenzenamine. 2-Aminophenyl phenyl ether.

Phenoxybenzamine hydrochloride. $C_{18}H_{23}Cl_2NO$. (M_r 340.3). *1063900.* *N*-(2-Chloroethyl)-*N*-(1-methyl-2-phenoxyethyl)-benzylamine hydrochloride.

Content: 97.0 per cent to 103.0 per cent (dried substance).

White or almost white, crystalline powder, sparingly soluble in water, freely soluble in ethanol (96 per cent).

mp: about 138 °C.

Loss on drying (*2.2.32*): maximum 0.5 per cent, determined by drying over *diphosphorus pentoxide R* at a pressure not exceeding 670 Pa for 24 h.

Assay. Dissolve 0.500 g in 50.0 mL of *ethanol-free chloroform R* and extract with three quantities, each of 20 mL, of *0.01 M hydrochloric acid*. Discard the acid extracts, filter the chloroform layer through cotton and dilute 5.0 mL of the filtrate to 500.0 mL with *ethanol-free chloroform R*. Measure the absorbance of the resulting solution in a closed cell at the maximum at 272 nm. Calculate the content of $C_{18}H_{23}Cl_2NO$, taking the specific absorbance to be 56.3.

Storage: protected from light.

Phenoxyethanol. $C_8H_{10}O_2$. (M_r 138.2). *1064000.* [122-99-6]. 2-Phenoxyethanol.

Clear, colourless, oily liquid, slightly soluble in water, freely soluble in ethanol (96 per cent).

d_{20}^{20}: about 1.11.

n_D^{20}: about 1.537.

Freezing point (*2.2.18*): minimum 12 °C.

Phenylacetic acid. $C_8H_8O_2$. (M_r 136.2). *1160000.* [103-82-2].

White or almost white powder, soluble in water.

bp: about 265 °C.

mp: about 75 °C.

Phenylalanine. *1064100.* [63-91-2].

See *Phenylalanine (0782)*.

***p*-Phenylenediamine dihydrochloride.** $C_6H_{10}Cl_2N_2$. (M_r 181.1). *1064200.* [615-28-1]. 1,4-Diaminobenzene dihydrochloride.

Crystalline powder or white or slightly coloured crystals, turning reddish on exposure to air, freely soluble in water, slightly soluble in ethanol (96 per cent).

α-Phenylglycine. $C_8H_9NO_2$. (M_r 151.2). *1064300.* [2835-06-5]. (*RS*)-2-Amino-2-phenylacetic acid.

D-Phenylglycine. $C_8H_9NO_2$. (M_r 151.2). *1144500.* [875-74-1]. (2*R*)-2-Amino-2-phenylacetic acid.

Content: minimum 99 per cent.

White or almost white, crystalline powder.

Phenylhydrazine hydrochloride. $C_6H_9ClN_2$. (M_r 144.6). *1064500.* [59-88-1].

White or almost white, crystalline powder, becoming brown on exposure to air, soluble in water and in ethanol (96 per cent).

mp: about 245 °C, with decomposition.

Storage: protected from light.

Phenylhydrazine hydrochloride solution. *1064501.*

Dissolve 0.9 g of *phenylhydrazine hydrochloride R* in 50 mL of *water R*. Decolorise with *activated charcoal R* and filter. To the filtrate add 30 mL of *hydrochloric acid R* and dilute to 250 mL with *water R*.

Phenylhydrazine-sulfuric acid solution. *1064502.*

Dissolve 65 mg of *phenylhydrazine hydrochloride R*, previously recrystallised from *ethanol (85 per cent V/V) R*, in a mixture of 80 volumes of *water R* and 170 volumes of *sulfuric acid R* and dilute to 100 mL with the same mixture of solvents. Prepare immediately before use.

Phenyl isothiocyanate. C_7H_5NS. (M_r 135.2). *1121500.* [103-72-0].

Liquid, insoluble in water, soluble in ethanol (96 per cent).

d_{20}^{20}: about 1.13.

n_D^{20}: about 1.65.

bp: about 221 °C.

mp: about − 21 °C.

Use a grade suitable for protein sequencing.

1-Phenylpiperazine. $C_{10}H_{14}N_2$. (M_r 162.2). *1130500.* [92-54-6].

Slightly viscous, yellow liquid, not miscible with water.

d_4^{20}: about 1.07.

n_D^{20}: about 1.588.

Phloroglucide. $C_{12}H_{10}O_5$. (M_r 234.2). *1177400.* [491-45-2]. 2,3′,4,5′,6-Biphenylpentol.

White or almost white powder, hygroscopic, light sensitive. Slowly discolours on exposure to light.

Phloroglucinol. $C_6H_6O_3,2H_2O$. (M_r 162.1). *1064600.* [6099-90-7]. Benzene-1,3,5-triol.

White or yellowish crystals, slightly soluble in water, soluble in ethanol (96 per cent).

mp: about 223 °C (instantaneous method).

Phloroglucinol solution. *1064601.*

To 1 mL of a 100 g/L solution of *phloroglucinol R* in *ethanol (96 per cent) R*, add 9 mL of *hydrochloric acid R*.

Storage: protected from light.

Phosalone. $C_{12}H_{15}ClNO_4PS_2$. (M_r 367.8). *1130200.* [2310-17-0].

mp: 45 °C to 48 °C

A suitable certified reference solution (10 ng/µL in iso-octane) may be used.

Phosphomolybdic acid. $12MoO_3,H_3PO_4,xH_2O$. *1064900.* [51429-74-4].

Orange-yellow, fine crystals, freely soluble in water, soluble in ethanol (96 per cent).

Phosphomolybdic acid solution. *1064901.*

Dissolve 4 g of *phosphomolybdic acid R* in *water R* and dilute to 40 mL with the same solvent. Add cautiously and with cooling 60 mL of *sulfuric acid R*. Prepare immediately before use.

Phosphomolybdotungstic reagent. *1065000.*

Dissolve 100 g of *sodium tungstate R* and 25 g of *sodium molybdate R* in 700 mL of *water R*. Add 100 mL of *hydrochloric acid R* and 50 mL of *phosphoric acid R*. Heat the mixture under a reflux condenser in a glass apparatus for 10 h. Add 150 g of *lithium sulfate R*, 50 mL of *water R* and a few drops of *bromine R*. Boil to remove the excess of bromine (15 min), allow to cool, dilute to 1000 mL with *water R* and filter. The reagent should be yellow in colour. If it acquires a greenish tint, it is unsatisfactory for use but may be regenerated by boiling with a few drops of *bromine R*. Care must be taken to remove the excess of bromine by boiling.

Storage: at 2 °C to 8 °C.

Phosphomolybdotungstic reagent, dilute. *1065001.*

To 1 volume of *phosphomolybdotungstic reagent R* add 2 volumes of *water R*.

Phosphoric acid. *1065100.* [7664-38-2].

See *Concentrated phosphoric acid (0004)*.

Phosphoric acid, dilute. *1065101.*

See *Dilute phosphoric acid (0005)*.

Phosphoric acid, dilute R1. *1065102.*

Dilute 93 mL of *dilute phosphoric acid R* to 1000 mL with *water R*.

Phosphorous acid. H_3PO_3. (M_r 82.0). *1130600.* [13598-36-2].

White or almost white, very hygroscopic and deliquescent crystalline mass; slowly oxidised by oxygen (air) to H_3PO_4.

Unstable, orthorhombic crystals, soluble in water, in ethanol (96 per cent) and in a mixture of 3 volumes of ether and 1 volume of ethanol (96 per cent).

d_4^{21}: 1.651.

mp: about 73 °C.

Phosphotungstic acid solution. *1065200.*

Heat under a reflux condenser for 3 h, 10 g of *sodium tungstate R* with 8 mL of *phosphoric acid R* and 75 mL of *water R*. Allow to cool and dilute to 100 mL with *water R*.

Phthalaldehyde. $C_8H_6O_2$. (M_r 134.1). *1065300.* [643-79-8]. Benzene-1,2-dicarboxaldehyde.

Yellow, crystalline powder.

mp: about 55 °C.

Storage: protected from light and air.

Phthalaldehyde reagent. *1065301.*

Dissolve 2.47 g of *boric acid R* in 75 mL of *water R*, adjust to pH 10.4 using a 450 g/L solution of *potassium hydroxide R* and dilute to 100 mL with *water R*. Dissolve 1.0 g of *phthalaldehyde R* in 5 mL of *methanol R*, add 95 mL of the boric acid solution and 2 mL of *thioglycollic acid R* and adjust to pH 10.4 with a 450 g/L solution of *potassium hydroxide R*.

Storage: protected from light; use within 3 days.

Phthalazine. $C_8H_6N_2$. (M_r 130.1). *1065400.* [253-52-1].

Pale yellow crystals, freely soluble in water, soluble in anhydrous ethanol, in ethyl acetate and in methanol.

mp: 89 °C to 92 °C.

Phthalein purple. $C_{32}H_{32}N_2O_{12},xH_2O$. ($M_r$ 637, anhydrous substance). *1065500.* [2411-89-4]. Metalphthalein. 2,2′,2″,2‴-[*o*-Cresolphthalein-3′,3″-bis(methylenenitrilo)]tetra-acetic acid. (1,3-Dihydro-3-oxo-isobenzofuran-1-ylidene)bis[(6-hydroxy-5-methyl-3,1-phenylene)bis(methyleneimino)diacetic acid].

Yellowish-white or brownish powder, practically insoluble in water, soluble in ethanol (96 per cent). The product may be found in commerce in the form of the sodium salt: a yellowish-white to pink powder, soluble in water, practically insoluble in ethanol (96 per cent).

Test for sensitivity. Dissolve 10 mg in 1 mL of *concentrated ammonia R* and dilute to 100 mL with *water R*. To 5 mL of the solution add 95 mL of *water R*, 4 mL of *concentrated ammonia R*, 50 mL of *ethanol (96 per cent) R* and 0.1 mL of *0.1 M barium chloride*. The solution is blue-violet. Add 0.15 mL of *0.1 M sodium edetate*. The solution becomes colourless.

Phthalic acid. $C_8H_6O_4$. (M_r 166.1). *1065600.* [88-99-3]. Benzene-1,2-dicarboxylic acid.

White or almost white, crystalline powder, soluble in hot water and in ethanol (96 per cent).

Phthalic anhydride. $C_8H_4O_3$. (M_r 148.1). *1065700.* [85-44-9]. Isobenzofuran-1,3-dione.

Content: minimum 99.0 per cent.

White or almost white flakes.

mp: 130 °C to 132 °C.

Assay. Dissolve 2.000 g in 100 mL of *water R* and boil under a reflux condenser for 30 min. Cool and titrate with *1 M sodium hydroxide*, using *phenolphthalein solution R* as indicator.

1 mL of *1 M sodium hydroxide* is equivalent to 74.05 mg of $C_8H_4O_3$.

Phthalic anhydride solution. *1065701.*

Dissolve 42 g of *phthalic anhydride R* in 300 mL of *anhydrous pyridine R*. Allow to stand for 16 h.

Storage: protected from light; use within 1 week.

Picein. $C_{14}H_{18}O_7$. (M_r 298.3). *1130700.* [530-14-3]. 1-[4-(β-D-Glucopyranosyloxy)phenyl]ethanone. *p*-(Acetylphenyl)-β-D-glucopyranoside.

mp: 194 °C to 195 °C.

Picric acid. $C_6H_3N_3O_7$. (M_r 229.1). *1065800.* [88-89-1]. 2,4,6-Trinitrophenol.

Yellow prisms or plates, soluble in water and in ethanol (96 per cent).

Storage: moistened with *water R*.

Picric acid solution. *1065801.*

A 10 g/L solution.

Picric acid solution R1. *1065802.*

Prepare 100 mL of a saturated solution of *picric acid R* and add 0.25 mL of *strong sodium hydroxide solution R*.

α-Pinene. $C_{10}H_{16}$. (M_r 136.2). *1130800.* [7785-70-8]. (1*R*,5*R*)-2,6,6-Trimethylbicyclo[3.1.1]hept-2-ene.

Liquid not miscible with water.

d_{20}^{20}: about 0.859.

n_D^{20}: about 1.466.

bp: 154 °C to 156 °C.

α-Pinene used in gas chromatography complies with the following additional test.

Assay. Gas chromatography (*2.2.28*) as prescribed in the monograph *Bitter-orange-flower oil (1175).*

Test solution. The substance to be examined.

Content: minimum 99.0 per cent, calculated by the normalisation procedure.

β-Pinene. $C_{10}H_{16}$. (M_r 136.2). *1109000.* [127-91-3]. 6,6-Dimethyl-2-methylenebicyclo[3.1.1]heptane.

Colourless, oily liquid, odour reminiscent of turpentine, practically insoluble in water, miscible with ethanol (96 per cent).

β-Pinene used in gas chromatography complies with the following additional test.

Assay. Gas chromatography (*2.2.28*) as prescribed in the monograph *Bitter-orange-flower oil (1175).*

Test solution. The substance to be examined.

Content: minimum 95.0 per cent.

1,4-Piperazinediethanesulfonic acid. $C_8H_{18}N_2O_6S_2$. (M_r 302.4). *1186700.* [5625-37-6]. Piperazine-1,4-bis(2-ethanesulfonic acid). 2,2′-(Piperazine-1,4-diyl)bis(ethanesulfonic acid). Piperazine-*N*,*N*′-bis(2-ethanesulfonic acid). PIPES.

Content: minimum 99 per cent.

White, crystalline powder.

Piperazine hydrate. *1065900.* [142-63-2].

See *Piperazine hydrate (0425).*

Piperidine. $C_5H_{11}N$. (M_r 85.2). *1066000.* [110-89-4]. Hexahydropyridine.

Colourless to slightly yellow, alkaline liquid, miscible with water, with ethanol (96 per cent) and with light petroleum.

bp: about 106 °C.

Piperine. $C_{17}H_{19}NO_3$. (M_r 285.3). *1183200.* [94-62-2]. (2*E*,4*E*)-1-(Piperidin-1-yl)-5-(1,3-benzodioxol-5-yl)penta-2,4-dien-1-one. 1-Piperoyl-piperidine. 1-[(2*E*,4*E*)-5-(3,4-Methylenedioxyphenyl)-1-oxo-2,4-pentadienyl]piperidine.

Piperitone. $C_{10}H_{16}O$. (M_r 152.2). *1151200.* [89-81-6]. 6-Isopropyl-3-methyl-cyclohex-2-en-1-one.

Pirimiphos-ethyl. $C_{13}H_{24}N_3O_3PS$. (M_r 333.4). *1130300.* [23505-41-1].

mp: 15 °C to 18 °C.

A suitable certified reference solution (10 ng/μL in cyclohexane) may be used.

Plasma, platelet-poor. *1066100.*

Withdraw 45 mL of human blood into a 50 mL plastic syringe containing 5 mL of a sterile 38 g/L solution of *sodium citrate R*. Without delay, centrifuge at 1500 *g* at 4 °C for 30 min. Remove the upper two-thirds of the supernatant plasma using a plastic syringe and without delay centrifuge at 3500 *g* at 4 °C for 30 min. Remove the upper two-thirds of the liquid and freeze it rapidly in suitable amounts in plastic tubes at or below − 40 °C. Use plastic or silicone-treated equipment.

Plasma substrate. *1066200.*

Separate the plasma from human or bovine blood collected into one-ninth its volume of a 38 g/L solution of *sodium citrate R*, or into two-sevenths its volume of a solution containing 20 g/L of *disodium hydrogen citrate R* and 25 g/L of *glucose R*. With the former, prepare the substrate on the day of collection of the blood. With the latter, prepare within two days of collection of the blood.

Storage: at − 20 °C.

Plasma substrate R1. *1066201.*

Use water-repellent equipment (made from materials such as suitable plastics or suitably silicone-treated glass) for taking and handling blood.

Collect a suitable volume of blood from each of at least five sheep; a 285 mL volume of blood collected into 15 mL of anticoagulant solution is suitable but smaller volumes may be collected, taking the blood, either from a live animal or at the time of slaughter, using a needle attached to a suitable cannula which is long enough to reach the bottom of the collecting vessel. Discarding the first few millilitres and collecting only free-flowing blood, collect the blood in a sufficient quantity of an anticoagulant solution containing 8.7 g of *sodium citrate R* and 4 mg of *aprotinin R* per 100 mL of *water R* to give a final ratio of blood to anticoagulant solution of 19 to 1. During and immediately after collection, swirl the flask gently to ensure mixing but do not allow frothing to occur. When collection is complete, close the flask and cool to 10-15 °C. When cold, pool the contents of all the flasks with the exception of any that show obvious haemolysis or clots and keep the pooled blood at 10-15 °C.

As soon as possible and within 4 h of collection, centrifuge the pooled blood at 1000-2000 *g* at 10-15 °C for 30 min. Separate the supernatant and centrifuge it at 5000 *g* for 30 min. (Faster centrifugation, for example 20 000 *g* for 30 min, may be used if necessary to clarify the plasma, but filtration procedures should not be used.) Separate the supernatant and, without delay, mix thoroughly and distribute the plasma substrate into small stoppered containers in portions sufficient for a complete heparin assay (for example 10 mL to 30 mL). Without delay, rapidly

cool to a temperature below – 70 °C (for example by immersing the containers into liquid nitrogen) and store at a temperature below – 30 °C.

The plasma is suitable for use as plasma substrate in the assay for heparin if, under the conditions of the assay, it gives a clotting time appropriate to the method of detection used and if it provides reproducible, steep log dose-response curves.

When required for use, thaw a portion of the plasma substrate in a water-bath at 37 °C, gently swirling until thawing is complete; once thawed it should be kept at 10-20 °C and used without delay. The thawed plasma substrate may be lightly centrifuged if necessary; filtration procedures should not be used.

Plasma substrate R2. *1066202.*

Prepare from human blood containing less than 1 per cent of the normal amount of factor IX. Collect the blood into one-ninth its volume of a 38 g/L solution of *sodium citrate R*.

Storage: in small amounts in plastic tubes at a temperature of – 30 °C or lower.

Plasma substrate R3. *1066203.*

Prepare from human blood containing less than 1 per cent of the normal amount of factor XI. Collect the blood into one-ninth its volume of a 38 g/L solution of *sodium citrate R*.

Storage: in small amounts in plastic tubes at a temperature of – 30 °C or lower.

Plasma substrate deficient in factor V. *1066300.*

Use preferably a plasma which is congenitally deficient, or prepare it as follows: separate the plasma from human blood collected into one tenth of its volume of a 13.4 g/L solution of *sodium oxalate R*. Incubate at 37 °C for 24 h to 36 h. The coagulation time determined by the method prescribed for *coagulation factor V solution R* should be 70 s to 100 s. If the coagulation time is less than 70 s, incubate again for 12 h to 24 h.

Storage: in small quantities at a temperature of – 20 °C or lower.

Plasminogen, human. *1109100.* [9001-91-6].

A substance present in blood that may be activated to plasmin, an enzyme that lyses fibrin in blood clots.

Plutonium-242 spiking solution. *1167400.*

Contains 50 Bq/L ^{242}Pu and a 134 g/L solution of *lanthanum chloride heptahydrate R* in a 284 g/L solution of *nitric acid R*.

Poloxamer 188. *1186800.*

See *Poloxamers (1464)*.

Poly[(cyanopropyl)methylphenylmethylsiloxane]. *1066500.*

See *poly[(cyanopropyl)(methyl)][(phenyl)(methyl)]siloxane R*.

Poly[(cyanopropyl)(methyl)][(phenyl)(methyl)]siloxane. *1066500.*

Contains 25 per cent of cyanopropyl groups, 25 per cent of phenyl groups and 50 per cent of methyl groups. (Average relative molecular mass 8000).

A very viscous liquid (viscosity about 9000 mPa·s).

d_{25}^{25}: about 1.10.

n_{D}^{25}: about 1.502.

Poly[(cyanopropyl)(phenyl)][dimethyl]siloxane. *1114800.*

Stationary phase for gas chromatography.

Contains 6 per cent of (cyanopropyl)(phenyl) groups and 94 per cent of dimethyl groups.

Poly(cyanopropyl)(phenylmethyl)siloxane. *1066600.*

Stationary phase for gas chromatography.

Contains 90 per cent of cyanopropylgroups and 10 per cent of phenylmethyl groups.

Poly(cyanopropyl)(7)(phenyl)(7)(methyl)(86)siloxane. *1109200.*

Stationary phase for gas chromatography.

Polysiloxane substituted with 7 per cent of cyanopropyl groups, 7 per cent of phenyl groups and 86 per cent of dimethyl groups.

Poly(cyanopropylphenyl)(14)(methyl)(86)siloxane. *1173700.*

Stationary phase for chromatography.

Contains 14 per cent of cyanopropylphenyl groups and 86 per cent of methyl groups.

Poly(cyanopropyl)siloxane. *1066700.*

Polysiloxane substituted with 100 per cent of cyanopropyl groups.

Poly(dimethyl)(diphenyl)(divinyl)siloxane. *1100000.*

Stationary phase for gas chromatography.

Contains 94 per cent of methyl groups, 5 per cent of phenyl groups and 1 per cent of vinyl groups. SE54.

Poly(dimethyl)(diphenyl)siloxane. *1066900.*

Stationary phase for gas chromatography.

Contains 95 per cent of methyl groups and 5 per cent of phenyl groups. DB-5, SE52.

Poly(dimethyl)(diphenyl)siloxane, base-deactivated. *1176600.*

Base-deactivated stationary phase for gas chromatography specially designed for amine analysis.

Contains 95 per cent of methyl groups and 5 per cent of phenyl groups.

Poly(dimethyl)(75)(diphenyl)(25)siloxane. *1171500.*

Stationary phase for chromatography.

Contains 75 per cent of methyl groups and 25 per cent of phenyl groups.

Poly(dimethyl)(85)(diphenyl)(15)siloxane. *1154700.*

Stationary phase for chromatography.

Contains 85 per cent of methyl groups and 15 per cent of phenyl groups. PS086.

Poly(dimethyl)siloxane. *1066800.*

Silicone gum rubber (methyl). Organosilicon polymer with the appearance of a semi-liquid, colourless gum.

The intrinsic viscosity, determined as follows is about 115 mL·g^{-1}. Weigh 1.5 g, 1 g and 0.3 g of the substance to be examined to the nearest 0.1 mg, into 100 mL volumetric flasks. Add 40-50 mL of *toluene R*, shake until the substance is completely dissolved and dilute to 100.0 mL with the same solvent. Determine the viscosity (*2.2.9*) of each solution. Determine the viscosity of *toluene R* under the same conditions. Reduce the concentration of each solution by half by diluting with *toluene R*. Determine the viscosity of these solutions.

c = concentration in grams per 100 mL,

t_1 = flow time of the solution to be examined,

t_2 = flow time of toluene,

η_1 = viscosity of the solution to be examined in millipascal seconds,

η_2 = viscosity of toluene in millipascal seconds,

d_1 = relative density of the solution to be examined,

d_2 = relative density of toluene.

To obtain the relative densities use the following data.

Concentration (g/100 mL)	Relative density (d_1)
0 - 0.5	1.000
0.5 - 1.25	1.001
1.25 - 2.20	1.002
2.20 - 2.75	1.003
2.75 - 3.20	1.004
3.20 - 3.75	1.005
3.75 - 4.50	1.006

The specific viscosity is obtained from the following equation:

$$\eta_{sp} = \frac{\eta_1 - \eta_2}{\eta_2} = \frac{t_1 d_1}{t_2 d_2} - 1$$

and the reduced viscosity from:

$$\eta_{red} = \frac{\eta_{sp}}{c}$$

The intrinsic viscosity (η) is obtained by extrapolating the preceding equation to $c = 0$. This is done by plotting the curve η_{sp}/c or $\log \eta_{sp}/c$ as a function of c. Extrapolation to $c = 0$ gives η. The intrinsic viscosity is expressed in millilitres per gram; the value obtained must therefore be multiplied by 100.

The infrared absorption spectrum (*2.2.24*) obtained by applying the substance, if necessary dispersed in a few drops of *carbon tetrachloride R*, to a sodium chloride plate, does not show absorption at 3053 cm^{-1}, corresponding to vinyl groups.

Loss on drying (*2.2.32*): maximum 2.0 per cent, determined on 1.000 g by drying *in vacuo* at 350 °C for 15 min; maximum 0.8 per cent, determined on 2.000 g by drying at 200 °C for 2 h.

Polyether hydroxylated gel for chromatography. *1067000.*

Gel with a small particle size having a hydrophilic surface with hydroxyl groups. It has an exclusion limit for dextran of relative molecular mass 2×10^5 to 2.5×10^6.

Polyethyleneglycol adipate. $(C_8H_{12}O_4)_n$. (M_r $(172.2)_n$). *1067700.*

White or almost white, wax-like mass, practically insoluble in water.

mp: about 43 °C.

Polyethyleneglycol, base-deactivated. *1170300.*

Stationary phase for gas chromatography.

Cross-linked, base-deactivated polyethyleneglycol specially designed for amine analysis.

Polyethyleneglycol, polar-deactivated. *1179000.*

Stationary phase for gas chromatography.

Polyethyleneglycol succinate. $(C_6H_8O_4)_n$. (M_r $(144.1)_n$). *1067800.*

White or almost white, crystalline powder, practically insoluble in water.

mp: about 102 °C.

Polymethacrylate gel. *1181100.*

A methacrylate-based size-exclusion stationary phase for water-soluble samples.

Polymethacrylate gel, hydroxylated. *1151300.*

Stationary phase for size-exclusion chromatography.

Gel based on hydroxylated methacrylic acid polymer.

Polymethylphenylsiloxane. *1067900.*

Stationary phase for gas chromatography.

Contains 50 per cent of methyl groups and 50 per cent of phenyl groups. (Average relative molecular mass 4000.)

Very viscous liquid (viscosity about 1300 mPa·s).

d_{25}^{25}: about 1.09.

n_D^{25}: about 1.540.

Poly[methyl(95)phenyl(5)]siloxane. *1068000.*

See *Poly(dimethyl)(diphenyl)siloxane R.*

Poly[methyl(94)phenyl(5)vinyl(1)]siloxane. *1068100.*

See *Poly(dimethyl)(diphenyl)(divinyl)siloxane R.*

Poly[methyl(trifluoropropylmethyl)siloxane]. *1171600.*

Stationary phase for gas chromatography.

Contains 50 per cent of trifluoropropylmethyl groups and 50 per cent of methyl groups.

Polyoxyethylated castor oil. *1068200.*

Light yellow liquid. It becomes clear above 26 °C.

Polysorbate 20. *1068300.* [9005-64-5].

See *Polysorbate 20 (0426).*

Polysorbate 80. *1068400.* [9005-65-6].

See *Polysorbate 80 (0428).*

Polystyrene 900-1000. *1112200.* [9003-53-6].

Organic standard used for calibration in gas chromatography.

M_w: about 950.

M_w/M_n: 1.10.

Potassium acetate. *1175900.* [127-08-2].

See *Potassium acetate (1139).*

Potassium bicarbonate. *1069900.* [298-14-6].

See *Potassium hydrogen carbonate R.*

Potassium bicarbonate solution, saturated methanolic. *1069901.*

See *potassium hydrogen carbonate solution, saturated methanolic R.*

Potassium bromate. $KBrO_3$. (M_r 167.0). *1068700.* [7758-01-2].

White or almost white granular powder or crystals, soluble in water, slightly soluble in ethanol (96 per cent).

Potassium bromide. *1068800.* [7758-02-3].

See *Potassium bromide (0184).*

Potassium bromide used for infrared absorption spectrophotometry (2.2.24) also complies with the following additional test.

A disc 2 mm thick prepared from the substance previously dried at 250 °C for 1 h, has a substantially flat baseline over the range 4000 cm^{-1} to 620 cm^{-1}. It exhibits no maxima with absorbance greater than 0.02 above the baseline, except maxima for water at 3440 cm^{-1} and 1630 cm^{-1}.

Potassium carbonate. K_2CO_3. (M_r 138.2). *1068900.* [584-08-7]. Dipotassium carbonate.

White or almost white, granular powder, hygroscopic, very soluble in water, practically insoluble in anhydrous ethanol.

Storage: in an airtight container.

Potassium chlorate. $KClO_3$. (M_r 122.6). *1069000.* [3811-04-9].

A white or almost white powder, granules or crystals, soluble in water.

Potassium chloride. *1069100.* [7447-40-7].

See *Potassium chloride (0185).*

Potassium chloride used for infrared absorption spectrophotometry (2.2.24) also complies with the following additional test.

A disc 2 mm thick, prepared from the substance previously dried at 250 °C for 1 h, has a substantially flat baseline over the range 4000 cm^{-1} to 620 cm^{-1}. It exhibits no maxima with absorbance greater than 0.02 above the baseline, except maxima for water at 3440 cm^{-1} and 1630 cm^{-1}.

Potassium chloride, 0.1 M. *1069101.*

A solution of *potassium chloride R* containing the equivalent of 7.46 g of KCl in 1000.0 mL.

Potassium chromate. K_2CrO_4. (M_r 194.2). *1069200.* [7789-00-6]. Dipotassium chromate.

Yellow crystals, freely soluble in water.

Potassium chromate solution. *1069201.*

A 50 g/L solution.

Potassium citrate. *1069300.* [6100-05-6].

See *Potassium citrate (0400).*

Potassium cyanide. KCN. (M_r 65.1). *1069400.* [151-50-8].

White or almost white, crystalline powder or white or almost white mass or granules, freely soluble in water, slightly soluble in ethanol (96 per cent).

Potassium cyanide solution. *1069401.*

A 100 g/L solution.

Potassium cyanide solution, lead-free. *1069402.*

Dissolve 10 g of *potassium cyanide R* in 90 mL of *water R*, add 2 mL of *strong hydrogen peroxide solution R* diluted 1 to 5. Allow to stand for 24 h, dilute to 100 mL with *water R* and filter.

The solution complies with the following test: take 10 mL of the solution, add 10 mL of *water R* and 10 mL of *hydrogen sulfide solution R*. No colour is evolved even after addition of 5 mL of *dilute hydrochloric acid R*.

Potassium dichromate. $K_2Cr_2O_7$. (M_r 294.2). *1069500.* [7778-50-9]. Dipotassium dichromate.

Potassium dichromate used for the calibration of spectrophotometers (*2.2.25*) contains not less than 99.9 per cent of $K_2Cr_2O_7$, calculated with reference to the substance dried at 130 °C.

Orange-red crystals, soluble in water, practically insoluble in ethanol (96 per cent).

Assay. Dissolve 1.000 g in *water R* and dilute to 250.0 mL with the same solvent. To 50.0 mL of this solution add a freshly prepared solution of 4 g of *potassium iodide R*, 2 g of *sodium hydrogen carbonate R* and 6 mL of *hydrochloric acid R* in 100 mL of *water R* in a 500 mL flask. Stopper the flask and allow to stand protected from light for 5 min. Titrate with *0.1 M sodium thiosulfate*, using 1 mL of *iodide-free starch solution R* as indicator.

1 mL of *0.1 M sodium thiosulfate* is equivalent to 4.903 mg of $K_2Cr_2O_7$.

Potassium dichromate solution. *1069501.*

A 106 g/L solution.

Potassium dichromate solution R1. *1069502.*

A 5 g/L solution.

Potassium dihydrogen phosphate. *1069600.* [7778-77-0].

See *Potassium dihydrogen phosphate (0920).*

Potassium dihydrogen phosphate, 0.2 M. *1069601.*

A solution of *potassium dihydrogen phosphate R* containing the equivalent of 27.22 g of KH_2PO_4 in 1000.0 mL.

Potassium ferricyanide. $K_3[Fe(CN)_6]$. (M_r 329.3). *1069700.* [13746-66-2]. Potassium hexacyanoferrate(III).

Red crystals, freely soluble in water.

Potassium ferricyanide solution. *1069701.*

Wash 5 g of *potassium ferricyanide R* with a little *water R*, dissolve and dilute to 100 mL with *water R*. Prepare immediately before use.

Potassium ferriperiodate solution. *1070801.*

Dissolve 1 g of *potassium periodate R* in 5 mL of a freshly prepared 120 g/L solution of *potassium hydroxide R*. Add 20 mL of *water R* and 1.5 mL of *ferric chloride solution R1*. Dilute to 50 mL with a freshly prepared 120 g/L solution of *potassium hydroxide R*.

Potassium ferrocyanide. $K_4[Fe(CN)_6],3H_2O$. (M_r 422.4). *1069800.* [14459-95-1]. Potassium hexacyanoferrate(II).

Transparent yellow crystals, freely soluble in water, practically insoluble in ethanol (96 per cent).

Potassium ferrocyanide solution. *1069801.*

A 53 g/L solution.

Potassium fluoride. KF. (M_r 58.1). *1137800.* [7789-23-3].

Colourless crystals or white or almost white crystalline powder, deliquescent, soluble in water, practically insoluble in ethanol (96 per cent).

Potassium hydrogen carbonate. $KHCO_3$. (M_r 100.1). *1069900.* [298-14-6]. Potassium bicarbonate.

Transparent, colourless crystals, freely soluble in water, practically insoluble in ethanol (96 per cent).

Potassium hydrogen carbonate solution, saturated methanolic. *1069901.*

Dissolve 0.1 g of *potassium hydrogen carbonate R* in 0.4 mL of *water R*, heating on water-bath. Add 25 mL of *methanol R* and swirl, keeping the solution on the water-bath until dissolution is complete. Use a freshly prepared solution.

Potassium hydrogen phthalate. $C_8H_5KO_4$. (M_r 204.2). *1070000.* [877-24-7]. Potassium hydrogen benzene-1,2-dicarboxylate.

White or almost white crystals, soluble in water, slightly soluble in ethanol (96 per cent).

Potassium hydrogen phthalate, 0.2 M. *1070001.*

A solution of *potassium hydrogen phthalate R* containing the equivalent of 40.84 g of $C_8H_5KO_4$ in 1000.0 mL.

Potassium hydrogen sulfate. $KHSO_4$. (M_r 136.2). *1070100.* [7646-93-7].

Colourless, transparent, hygroscopic crystals, freely soluble in water giving a strongly acid solution.

Storage: in an airtight container.

Potassium hydrogen tartrate. $C_4H_5KO_6$. (M_r 188.2). *1070200.* [868-14-4]. Potassium hydrogen (2*R*,3*R*)-2,3-dihydroxybutane-1,4-dioate.

White or almost white, crystalline powder or colourless, slightly opaque crystals, slightly soluble in water, soluble in boiling water, practically insoluble in ethanol (96 per cent).

Potassium hydroxide. *1070300.* [1310-58-3].

See *Potassium hydroxide (0840).*

Potassium hydroxide, alcoholic, 2 M. *1070301.*

Dissolve 12 g of *potassium hydroxide R* in 10 mL of *water R* and dilute to 100 mL with *ethanol (96 per cent) R*.

Potassium hydroxide in alcohol (10 per cent *V/V*), 0.5 M. *1070302.*

Dissolve 28 g of *potassium hydroxide R* in 100 mL of *ethanol (96 per cent) R* and dilute to 1000 mL with *water R*.

Potassium hydroxide solution, alcoholic. *1070303.*

Dissolve 3 g of *potassium hydroxide R* in 5 mL of *water R* and dilute to 100 mL with *aldehyde-free alcohol R*. Decant the clear solution. The solution should be almost colourless.

Potassium hydroxide solution, alcoholic R1. *1070304.*

Dissolve 6.6 g of *potassium hydroxide R* in 50 mL of *water R* and dilute to 1000 mL with *anhydrous ethanol R*.

Potassium iodate. KIO_3. (M_r 214.0). *1070400.* [7758-05-6].

White or almost white, crystalline powder, soluble in water.

Potassium iodide. *1070500.* [7681-11-0].

See *Potassium iodide (0186)*.

Potassium iodide and starch solution. *1070501.*

Dissolve 0.75 g of *potassium iodide R* in 100 mL of *water R*. Heat to boiling and add whilst stirring a solution of 0.5 g of *soluble starch R* in 35 mL of *water R*. Boil for 2 min and allow to cool.

Test for sensitivity. A mixture of 15 mL of the potassium iodide and starch solution, 0.05 mL of *glacial acetic acid R* and 0.3 mL of *iodine solution R2* is blue.

Potassium iodide solution. *1070502.*

A 166 g/L solution.

Potassium iodide solution, iodinated. *1070503.*

Dissolve 2 g of *iodine R* and 4 g of *potassium iodide R* in 10 mL of *water R*. When solution is complete dilute to 100 mL with *water R*.

Potassium iodide solution, iodinated R1. *1070505.*

Dissolve 500 mg of *iodine R* and 1.5 g of *potassium iodide R* in *water R* and dilute to 25 mL with the same solvent.

Potassium iodide solution, saturated. *1070504.*

A saturated solution of *potassium iodide R* in *carbon dioxide-free water R*. Make sure the solution remains saturated as indicated by the presence of undissolved crystals.

Test by adding to 0.5 mL of the saturated potassium iodide solution 30 mL of a mixture of 2 volumes of *chloroform R* and 3 volumes of *glacial acetic acid R*, as well as 0.1 mL of *starch solution R*. Any blue colour formed should be discharged by the addition of 0.05 mL of *0.1 M sodium thiosulfate*.

Storage: protected from light.

Potassium iodobismuthate solution. *1070600.*

To 0.85 g of *bismuth subnitrate R* add 40 mL of *water R*, 10 mL of *glacial acetic acid R* and 20 mL of a 400 g/L solution of *potassium iodide R*.

Potassium iodobismuthate solution, dilute. *1070603.*

Dissolve 100 g of *tartaric acid R* in 500 mL of *water R* and add 50 mL of *potassium iodobismuthate solution R1*.

Storage: protected from light.

Potassium iodobismuthate solution R1. *1070601.*

Dissolve 100 g of *tartaric acid R* in 400 mL of *water R* and add 8.5 g of *bismuth subnitrate R*. Shake for 1 h, add 200 mL of a 400 g/L solution of *potassium iodide R* and shake well. Allow to stand for 24 h and filter.

Storage: protected from light.

Potassium iodobismuthate solution R2. *1070602.*

Stock solution. Suspend 1.7 g of *bismuth subnitrate R* and 20 g of *tartaric acid R* in 40 mL of *water R*. To the suspension add 40 mL of a 400 g/L solution of *potassium iodide R* and stir for 1 h. Filter. The solution may be kept for several days in brown bottles.

Spray solution. Mix immediately before use 5 mL of the stock solution with 15 mL of *water R*.

Potassium iodobismuthate solution R3. *1070604.*

Dissolve 0.17 g of *bismuth subnitrate R* in a mixture of 2 mL of *glacial acetic acid R* and 18 mL of *water R*. Add 4 g of *potassium iodide R*, 1 g of *iodine R* and dilute to 100 mL with *dilute sulfuric acid R*.

Potassium iodobismuthate solution R4. *1070605.*

Dissolve 1.7 g of *bismuth subnitrate R* in 20 mL of *glacial acetic acid R*. Add 80 mL of *distilled water R*, 100 mL of a 400 g/L solution of *potassium iodide R*, 200 mL of *glacial acetic acid R* and dilute to 1000 mL with *distilled water R*. Mix 2 volumes of this solution with 1 volume of a 200 g/L solution of *barium chloride R*.

Potassium iodobismuthate solution R5. *1070606.*

To 0.85 g of *bismuth subnitrate R* add 10 mL of *glacial acetic acid R* and gently heat until completely dissolved. Add 40 mL of *water R* and allow to cool. To 5 mL of this solution, add 5 mL of a 400 g/L solution of *potassium iodide R*, 20 mL of *glacial acetic acid R* and 70 mL of *water R*.

Potassium nitrate. KNO_3. (M_r 101.1). *1070700.* [7757-79-1].

Colourless crystals, very soluble in water.

Potassium periodate. KIO_4. (M_r 230.0). *1070800.* [7790-21-8].

White or almost white, crystalline powder or colourless crystals, soluble in water.

Potassium permanganate. *1070900.* [7722-64-7].

See *Potassium permanganate (0121)*.

Potassium permanganate and phosphoric acid solution. *1070901.*

Dissolve 3 g of *potassium permanganate R* in a mixture of 15 mL of *phosphoric acid R* and 70 mL of *water R*. Dilute to 100 mL with *water R*.

Potassium permanganate solution. *1070902.*

A 30 g/L solution.

Potassium perrhenate. $KReO_4$. (M_r 289.3). *1071000.* [10466-65-6].

White or almost white, crystalline powder, soluble in water, slightly soluble in ethanol (96 per cent), in methanol and in propylene glycol.

Potassium persulfate. $K_2S_2O_8$. (M_r 270.3). *1071100.* [7727-21-1]. Dipotassium peroxodisulfate.

Colourless crystals or white or almost white, crystalline powder, sparingly soluble in water, practically insoluble in ethanol (96 per cent). Aqueous solutions decompose at room temperature and more rapidly on warming.

Potassium plumbite solution. *1071200.*

Dissolve 1.7 g of *lead acetate R*, 3.4 g of *potassium citrate R* and 50 g of *potassium hydroxide R* in *water R* and dilute to 100 mL with the same solvent.

Potassium pyroantimonate. $KSb(OH)_6$. (M_r 262.9). *1071300.* [12208-13-8]. Potassium hexahydroxoantimoniate.

White or almost white, crystals or crystalline powder, sparingly soluble in water.

Potassium pyroantimonate solution. *1071301.*

Dissolve 2 g of *potassium pyroantimonate R* in 95 mL of hot *water R*. Cool quickly and add a solution containing 2.5 g of *potassium hydroxide R* in 50 mL of *water R* and 1 mL of *dilute sodium hydroxide solution R*. Allow to stand for 24 h, filter and dilute to 150 mL with *water R*.

Potassium tartrate. $C_4H_4K_2O_6,{}^1/_2H_2O$. (M_r 235.3). *1071400.* [921-53-9]. Dipotassium (2*R*,3*R*)-2,3-dihydroxybutane-1,4-dioate hemihydrate.

White or almost white, granular powder or crystals, very soluble in water, very slightly soluble in ethanol (96 per cent).

Potassium tetraiodomercurate solution. *1071500.*

Dissolve 1.35 g of *mercuric chloride R* in 50 mL of *water R*. Add 5 g of *potassium iodide R* and dilute to 100 mL with *water R*.

Potassium tetraiodomercurate solution, alkaline. *1071600.*

Dissolve 11 g of *potassium iodide R* and 15 g of *mercuric iodide R* in *water R* and dilute to 100 mL with the same solvent. Immediately before use, mix 1 volume of this solution with an equal volume of a 250 g/L solution of *sodium hydroxide R*.

Potassium tetroxalate. $C_4H_3KO_8,2H_2O$. (M_r 254.2). *1071700.* [6100-20-5].

White or almost white, crystalline powder, sparingly soluble in water, soluble in boiling water, slightly soluble in ethanol (96 per cent).

Potassium thiocyanate. KSCN. (M_r 97.2). *1071800.* [333-20-0].

Colourless crystals, deliquescent, very soluble in water and in ethanol (96 per cent).

Storage: in an airtight container.

Potassium thiocyanate solution. *1071801.*

A 97 g/L solution.

Povidone. *1068500.* [9003-39-8].

See *Povidone (0685)*.

Procaine hydrochloride. *1109400.*

See *Procaine hydrochloride (0050)*.

Proline. *1152200.* [147-85-3].

See *Proline (0785)*.

Propane-1,3-diol. $C_3H_8O_2$. (M_r 76.1). *1185100.* [504-63-2]. 1,3-Dihydroxypropane.

Colourless, viscous liquid.

bp: about 214 °C.

mp: about − 27 °C.

Propanol. C_3H_8O. (M_r 60.1). *1072000.* [71-23-8]. Propan-1-ol.

Clear colourless liquid, miscible with water and with ethanol (96 per cent).

d_{20}^{20}: about 0.802 to 0.806.

bp: about 97.2 °C.

Distillation range (*2.2.11*). Not less than 95 per cent distils between 96 °C and 99 °C.

Propanol R1. *1184400.* [71-23-8].

See *Propanol (2036)*.

2-Propanol. C_3H_8O. (M_r 60.1). *1072100.* [67-63-0]. Propan-2-ol. Isopropyl alcohol.

Clear, colourless, flammable liquid, miscible with water and with ethanol (96 per cent).

d_{20}^{20}: about 0.785.

bp: 81 °C to 83 °C.

2-Propanol R1. *1072101.*

Complies with the requirements prescribed for *2-propanol R* with the following additional requirements.

n_D^{20}: about 1.378.

Water (*2.5.12*): maximum 0.05 per cent, determined on 10 g.

Minimum transmittance (*2.2.25*) using *water R* as compensation liquid: 25 per cent at 210 nm, 55 per cent at 220 nm, 75 per cent at 230 nm, 95 per cent at 250 nm, 98 per cent at 260 nm.

2-Propanol R2. *1184900.* [67-63-0].

See *Isopropyl alcohol (0970)*.

Propetamphos. $C_{10}H_{20}NO_4PS$. (M_r 281.3). *1130900.* [31218-83-4].

A suitable certified reference solution (10 ng/µL in cyclohexane) may be used.

Propidium iodide. $C_{27}H_{34}I_2N_4$. (M_r 668.4). *1154200.* [25535-16-4]. 3,8-Diamino-5-[3(diethylmethylammonio)-propyl]-6-phenylphenanthridinium diiodide.

Dark red solid.

Propionaldehyde. C_3H_6O. (M_r 58.1). *1072300.* [123-38-6]. Propanal.

Liquid freely soluble in water, miscible with ethanol (96 per cent).

d_{20}^{20}: about 0.81.

n_D^{20}: about 1.365.

bp: about 49 °C.

mp: about − 81 °C.

Propionic acid. $C_3H_6O_2$. (M_r 74.1). *1072400.* [79-09-4].

Oily liquid, soluble in ethanol (96 per cent), miscible with water.

d_{20}^{20}: about 0.993.

n_D^{20}: about 1.387.

bp: about 141 °C.

mp: about − 21 °C.

Propionic anhydride. $C_6H_{10}O_3$. (M_r 130.1). *1072500.* [123-62-6].

Clear, colourless liquid, soluble in ethanol (96 per cent).

d_{20}^{20}: about 1.01.

bp: about 167 °C.

Propionic anhydride reagent. *1072501.*

Dissolve 1 g of *toluenesulfonic acid R* in 30 mL of *glacial acetic acid R*, add 5 mL of *propionic anhydride R* and allow to stand for at least 15 min before use.

Storage: use within 24 h.

Propyl acetate. $C_5H_{10}O_2$. (M_r 102.1). *1072600.* [109-60-4].

d_{20}^{20}: about 0.888.

bp: about 102 °C.

mp: about − 95 °C.

Propyl parahydroxybenzoate. *1072700.* [94-13-3].

See *Propyl parahydroxybenzoate (0431)*.

D-Prolyl-L-phenylalanyl-L-arginine 4-nitroanilide dihydrochloride. $C_{26}H_{36}Cl_2N_8O_5$. (M_r 612). *1072800.*

Propylene glycol. *1072900.* [57-55-6].

See *Propylene glycol (0430)*.

Propylene oxide. C_3H_6O. (M_r 58.1). *1121800.* [75-56-9].

Colourless liquid, miscible with ethanol (96 per cent).

Protamine sulfate. *1073000.* [53597-25-4 (salmine) 9007-31-2 (clupeine)].

See *Protamine sulfate (0569)*.

Protopine hydrochloride. $C_{20}H_{20}ClNO_5$. (M_r 389.8). *1163500.* [6164-47-2].

5-Methyl-4,6,7,14-tetrahydrobis[1,3]benzodioxolo[4,5-*c*:5′,6′-*g*]azecin-13(5*H*)-one hydrochloride.

Pteroic acid. $C_{14}H_{12}N_6O_3$. (M_r 312.3). *1144600.* [119-24-4]. 4-[[(2-Amino-4-oxo-1,4-dihydropteridin-6-yl)methyl]amino]benzoic acid.

Crystals, soluble in solutions of alkali hydroxides.

Puerarin. $C_{21}H_{20}O_9$. (M_r 416.4). *1180600.* [3681-99-0]. 7,4′-Dihydroxy-8-*C*-glucosyliso-haloprone. 8-β-D-Glucopyranosyl-7-hydroxy-3-(4-hydroxyphenyl)-4*H*-1-benzopyran-4-one.

Pulegone. $C_{10}H_{16}O$. (M_r 152.2). *1073100.* [89-82-7]. (*R*)-2-Isopropylidene-5-methylcyclohexanone. (+)-*p*-Menth-4-en-3-one.

Oily, colourless liquid, practically insoluble in water, miscible with ethanol (96 per cent).

d_{15}^{20}: about 0.936.

n_D^{20}: 1.485 to 1.489.

bp: 222 °C to 224 °C.

Pulegone used in gas chromatography complies with the following additional test.

Assay. Gas chromatography (*2.2.28*) as prescribed in the monograph *Peppermint oil (0405)*.

Test solution. The substance to be examined.

Content: minimum 98.0 per cent, calculated by the normalisation procedure.

Putrescine. $C_4H_{12}N_2$. (M_r 88.15). *1137900.* [110–60–1]. 1,4-Butanediamine. Tetramethylenediamine.

Colourless oily liquid, very soluble in water. Strong piperidine-like odour.

bp: about 159 °C.

mp: about 23 °C.

Pyrazine-2-carbonitrile. $C_5H_3N_3$. (M_r 105.1). *1183300.* [19847-12-2]. 2-Cyanopyrazine.

Clear, pale yellow liquid.

Content: minimum 99 per cent.

Pyridin-2-amine. $C_5H_6N_2$. (M_r 94.1). *1073400.* [504-29-0]. 2-Aminopyridine.

Large crystals soluble in water and in ethanol (96 per cent).

bp: about 210 °C.

mp: about 58 °C.

Pyridine. C_5H_5N. (M_r 79.1). *1073200.* [110-86-1].

Clear, colourless liquid, hygroscopic, miscible with water and with ethanol (96 per cent).

bp: about 115 °C.

Storage: in an airtight container.

Pyridine, anhydrous. *1073300.*

Dry *pyridine R* over *anhydrous sodium carbonate R*. Filter and distil.

Water (*2.5.12*): maximum 0.01 per cent *m/m*.

Pyridinium hydrobromide perbromide. $C_5H_6Br_3N$. (M_r 319.8). *1166100.* [39416-48-3]. Pyridinium tribromide(1-).

Red crystals.

Pyridylazonaphthol. $C_{15}H_{11}N_3O$. (M_r 249.3). *1073500.* [85-85-8]. 1-(2-Pyridylazo)-2-naphthol.

Brick-red powder, practically insoluble in water, soluble in ethanol (96 per cent), in methanol and in hot dilute alkali solutions.

mp: about 138 °C.

Pyridylazonaphthol solution. *1073501.*

A 1 g/L solution in *anhydrous ethanol R*.

Test for sensitivity. To 50 mL of *water R* add 10 mL of *acetate buffer solution pH 4.4 R*, 0.10 mL of *0.02 M sodium edetate* and 0.25 mL of the pyridylazonaphthol solution. After addition of 0.15 mL of a 5 g/L solution of *copper sulfate R*, the colour changes from light yellow to violet.

4-(2-Pyridylazo)resorcinol monosodium salt. $C_{11}H_8N_3NaO_2$, H_2O. (M_r 255.2). *1131500.* [16593-81-0].

Orange crystalline powder.

Pyrocatechol. $C_6H_6O_2$. (M_r 110.1). *1073600.* [120-80-9]. Benzene-1,2-diol.

Colourless or slightly yellow crystals, soluble in water, in acetone and in ethanol (96 per cent).

mp: about 102 °C.

Storage: protected from light.

Pyrogallol. $C_6H_6O_3$. (M_r 126.1). *1073700.* [87-66-1]. Benzene-1,2,3-triol.

White or almost white crystals, becoming brownish on exposure to air and light, very soluble in water and in ethanol (96 per cent), slightly soluble in carbon disulfide. On exposure to air, aqueous solutions, and more rapidly alkaline solutions, become brown owing to the absorption of oxygen.

mp: about 131 °C.

Storage: protected from light.

Pyrogallol solution, alkaline. *1073701.*

Dissolve 0.5 g of *pyrogallol R* in 2 mL of *carbon dioxide-free water R*. Dissolve 12 g of *potassium hydroxide R* in 8 mL of *carbon dioxide-free water R*. Mix the two solutions immediately before use.

Pyrrolidine. C_4H_9N. (M_r 71.1). *1165000.* [123-75-1].

Content: minimum 99 per cent.

bp: 87 °C to 88 °C.

2-Pyrrolidone. C_4H_7NO. (M_r 85.1). *1138000.* [616-45-5]. Pyrrolidin-2-one.

Liquid above 25 °C, miscible with water, with anhydrous ethanol and with ethyl acetate.

d_4^{25}: 1.116.

Water (*2.5.12*): maximum 0.2 per cent determined on 2.00 g.

Assay. Gas chromatography (*2.2.28*): use the normalisation procedure.

Test solution. Dissolve 1.0 g in *methanol R* and dilute to 10.0 mL with the same solvent.

Column:

- *material*: glass;
- *size*: *l* = 30 m; Ø = 0.53 mm;
- *stationary phase*: *macrogol 20 000 R* (1.0 µm).

Carrier gas: *helium for chromatography R*.

Flow rate: adjusted so that the retention time of 2-pyrrolidone is about 10 min.

Split ratio: 1:20.

Temperature:

	Time (min)	Temperature (°C)
Column	0 - 1	80
	1 - 12	80 → 190
	12 - 32	190
Injection port		200

Detection: flame ionisation.

Injection: 1 µL of the test solution.

Content: minimum 98.0 per cent.

Pyruvic acid. $C_3H_4O_3$. (M_r 88.1). *1109300.* [127-17-3]. 2-Oxopropanoic acid.

Yellowish liquid, miscible with water and with anhydrous ethanol.

d_{20}^{20}: about 1.267.

n_D^{20}: about 1.413.

bp: about 165 °C.

Quercetin dihydrate. $C_{15}H_{10}O_7,2H_2O$. (M_r 338.2). *1138100.* 2-(3,4-Dihydroxyphenyl)-3,5,7-trihydroxy-4*H*-1-benzopyran-4-one.

Yellow crystals or yellowish powder, practically insoluble in water, soluble in acetone and in methanol.

Water (*2.5.12*): maximum 12.0 per cent, determined on 0.100 g.

Assay. Liquid chromatography (*2.2.29*) as prescribed in the monograph *Ginkgo leaf (1828)*.

Content:minimum 90 per cent (anhydrous substance) calculated by the normalisation procedure.

Storage: protected from light.

Quercitrin. $C_{21}H_{20}O_{11}$. (M_r 448.4). *1138200.* [522-12-3]. Quercetin 3-L-rhamnopyranoside. 3-[(6-Deoxy-α-L-mannopyranosyl)oxy]-2-(3,4-dihydroxyphenyl)-5,7-dihydroxy-4*H*-1-benzopyran-4-one. Quercitroside.

Yellow crystals, practically insoluble in cold water, soluble in ethanol (96 per cent).

mp: 176 °C to 179 °C.

Chromatography. Thin-layer chromatography (*2.2.27*) as prescribed in the monograph *Goldenrod (1892)*: apply 20 µL of the solution; after spraying, the chromatogram shows a yellowish-brown fluorescent zone with an R_F of about 0.6.

Storage: at a temperature of 2 °C to 8 °C.

Quillaia saponins, purified. *1184500.*

A mixture of related saponins obtained from the bark of *Quillaja saponaria* Molina *s.l.*

Chromatography. Thin-layer chromatography (*2.2.27*) as prescribed in the monograph *Quillaia bark (1843)*: apply 5 µL of the solution; after treating with a 10 per cent *V/V* solution of *sulfuric acid R* in *methanol R*, heat at 120 °C for 5 min and examine in daylight; the chromatogram shows 3 principal zones in the upper part of the middle third.

Quinaldine red. $C_{21}H_{23}IN_2$. (M_r 430.3). *1073800.* [117-92-0]. 2-[2-[4-(Dimethylamino)phenyl]ethenyl]-1-ethylquinolinium iodide.

Dark bluish-black powder, sparingly soluble in water, freely soluble in ethanol (96 per cent).

Quinaldine red solution. *1073801.*

Dissolve 0.1 g of *quinaldine red R* in *methanol R* and dilute to 100 mL with the same solvent.

Colour change: pH 1.4 (colourless) to pH 3.2 (red).

Quinhydrone. $C_{12}H_{10}O_4$. (M_r 218.2). *1073900.* [106-34-3]. Equimolecular compound of 1,4-benzoquinone and hydroquinone.

Dark green, lustrous crystals or a crystalline powder, slightly soluble in water, sparingly soluble in hot water, soluble in ethanol (96 per cent) and in concentrated ammonia.

mp: about 170 °C.

Quinidine. $C_{20}H_{24}N_2O_2$. (M_r 324.4). *1074000.* [56-54-2]. (*S*)-(6-Methoxyquinol-4-yl)[(2*R*,4*S*,5*R*)-5-vinylquinuclidin-2-yl]methanol.

White or almost white crystals, very slightly soluble in water, sparingly soluble in ethanol (96 per cent), slightly soluble in methanol.

$[\alpha]_D^{20}$: about + 260, determined on a 10 g/L solution in *anhydrous ethanol R*.

mp: about 172 °C.

Storage: protected from light.

Quinidine sulfate. *1109500.* [6591-63-5].

See *Quinidine sulfate (0017)*.

Quinine. $C_{20}H_{24}N_2O_2$. (M_r 324.4). *1074100.* [130-95-0]. (*R*)-(6-Methoxyquinol-4-yl)[(2*S*,4*S*,5*R*)-5-vinylquinuclidin-2-yl]methanol.

White or almost white, microcrystalline powder, very slightly soluble in water, slightly soluble in boiling water, very soluble in anhydrous ethanol.

$[\alpha]_D^{20}$: about − 167, determined on a 10 g/L solution in *anhydrous ethanol R*.

mp: about 175 °C.

Storage: protected from light.

Quinine hydrochloride. *1074200.* [6119-47-7].

See *Quinine hydrochloride (0018)*.

Quinine sulfate. *1074300.* [6119-70-6].

See *Quinine sulfate (0019)*.

Rabbit erythrocyte suspension. *1074500.*

Prepare a 1.6 per cent *V/V* suspension of rabbit erythrocytes as follows: defibrinate 15 mL of freshly drawn rabbit blood by shaking with glass beads, centrifuge at 2000 *g* for 10 min and wash the erythrocytes with three quantities, each of 30 mL, of a 9 g/L solution of *sodium chloride R*. Dilute 1.6 mL of the suspension of erythrocytes to 100 mL with a mixture of 1 volume of *phosphate buffer solution pH 7.2 R* and 9 volumes of a 9 g/L solution of *sodium chloride R*.

Raclopride tartrate. $C_{19}H_{26}Cl_2N_2O_9$. (M_r 497.3). *1144700.* [98185-20-7]. Raclopride L-tartrate.

White or almost white solid, sensitive to light, soluble in water.

$[\alpha]_D^{25}$: + 0.3, determined on a 3 g/L solution.

mp: about 141 °C.

Rapeseed oil. *1074600.*

See *Rapeseed oil, refined (1369)*.

Reducing mixture. *1074700.*

Grind the substances added in the following order to obtain a homogeneous mixture: 20 mg of *potassium bromide R*, 0.5 g of *hydrazine sulfate R* and 5 g of *sodium chloride R*.

Reichstein's substance S. $C_{21}H_{30}O_4$. (M_r 346.5). *1175400.* [152-58-9].

Content: minimum 95.0 per cent.

mp: about 208 °C.

Resin for reversed-phase ion chromatography. *1131100.*

A neutral, macroporous, high specific surface area with a non-polar character resin consisting of polymer lattice of polystyrene cross-linked with divinylbenzene.

Resin, weak cationic. *1096000.*

See *weak cationic resin R*.

Resorcinol. *1074800.* [108-46-3].

See *Resorcinol (0290)*.

Resorcinol reagent. *1074801.*

To 80 mL of *hydrochloric acid R1* add 10 mL of a 20 g/L solution of *resorcinol R* and 0.25 mL of a 25 g/L solution of *copper sulfate R* and dilute to 100.0 mL with *water R*. Prepare the solution at least 4 h before use.

Storage: at 2 °C to 8 °C for 1 week.

Resveratrol. $C_{14}H_{12}O_3$. (M_r 228.2). *1186900.* [501-36-0]. 3,4′,5-Stilbenetriol. 5-[(*E*)-2-(4-Hydroxyphenyl)ethenyl]benzene-1,3-diol.

Rhamnose. $C_6H_{12}O_5,H_2O$. (M_r 182.2). *1074900.* [6155-35-7]. L-(+)-Rhamnose. 6-Deoxy-L-mannose.

White or almost white, crystalline powder, freely soluble in water.

$[\alpha]_D^{20}$: + 7.8 to + 8.3, determined on a 50 g/L solution in *water R* containing about 0.05 per cent of NH_3.

Rhaponticin. $C_{21}H_{24}O_9$. (M_r 420.4). *1075000.* [155-58-8]. 3-Hydroxy-5-[2-(3-hydroxy-4-methoxyphenyl)ethenyl]phenyl β-D-glucopyranoside.

Yellowish-grey, crystalline powder, soluble in ethanol (96 per cent) and in methanol.

Chromatography. Thin-layer chromatography (*2.2.27*) as prescribed in the monograph *Rhubarb (0291)*; the chromatogram shows only one principal spot.

Rhodamine 6 G. $C_{28}H_{31}ClN_2O_3$. (M_r 479.0). *1153300.* [989-38-8].

Colour Index No. 45160.

9-[2-(Ethoxycarbonyl)phenyl]-3,6-bis(ethylamino)-2,7-dimethylxanthenylium chloride.

Brownish-red powder.

Rhodamine B. $C_{28}H_{31}ClN_2O_3$. (M_r 479.0). *1075100.* [81-88-9].

Schultz No. 864.

Colour Index No. 45170.

[9-(2-Carboxyphen-yl)-6-(diethylamino)-3*H*-xanthen-3-ylidene]diethylammonium chloride.

Green crystals or reddish-violet powder, very soluble in water and in ethanol (96 per cent).

Ribose. $C_5H_{10}O_5$. (M_r 150.1). *1109600.* [50-69-1]. D-Ribose.

Soluble in water, slightly soluble in ethanol (96 per cent).

mp: 88 °C to 92 °C.

Ricinoleic acid. $C_{18}H_{34}O_3$. (M_r 298.5). *1100100.* [141-22-0]. (9*Z*,12*R*)-12-Hydroxyoctadec-9-enoic acid. 12-Hydroxyoleic acid.

Yellow or yellowish-brown viscous liquid, consisting of a mixture of fatty acids obtained by the hydrolysis of castor oil, practically insoluble in water, very soluble in anhydrous ethanol.

d_{20}^{20}: about 0.942.

n_D^{20}: about 1.472.

mp: about 285 °C, with decomposition.

Rosmarinic acid. $C_{18}H_{16}O_8$. (M_r 360.3). *1138300.* [20283-92-5].

mp: 170 °C to 174 °C.

Ruthenium red. $[(NH_3)_5RuORu(NH_3)_4ORu(NH_3)_5]Cl_6,4H_2O$. ($M_r$ 858). *1075200.* [11103-72-3].

Brownish-red powder, soluble in water.

Ruthenium red solution. *1075201.*

A 0.8 g/L solution in *lead acetate solution R*.

Rutin. $C_{27}H_{30}O_{16},3H_2O$. (M_r 665). *1075300.* [153-18-4]. Rutoside. 3-(*O*-6-Deoxy-α-L-mannopyranosyl-(1→6)-β-D-glucopyranosyloxy)-2-(3,4-dihydroxyphenyl)-5,7-dihydroxy-4*H*-chromen-4-one.

Yellow, crystalline powder, darkening in light, very slightly soluble in water, soluble in about 400 parts of boiling water, slightly soluble in ethanol (96 per cent), soluble in solutions of the alkali hydroxides and in ammonia.

mp: about 210 °C, with decomposition.

Absorbance (*2.2.25*). A solution in *ethanol (96 per cent) R* shows two absorption maxima at 259 nm and 362 nm.

Storage: protected from light.

Sabinene. $C_{10}H_{16}$. (M_r 136.2). *1109700.* [3387-41-5]. Thuj-4(10)-ene. 4-Methylene-1-isopropylbicyclo[3.1.0]hexane.

A colourless, oily liquid.

Sabinene used in gas chromatography complies with the following additional test.

Assay. Gas chromatography (*2.2.28*) as prescribed in the monograph *Bitter-orange-flower oil (1175)*.

Test solution. The substance to be examined.

Content: minimum 95.0 per cent, calculated by the normalisation procedure.

Saccharin sodium. *1131400.* [128-44-9].

See *Saccharin sodium (0787)*.

Safrole. $C_{10}H_{10}O_2$. (M_r 162.2). *1131200.* [94-59-7]. 5-(Prop-2-enyl)-1,3-benzodioxole. 4-Allyl-1,2-(methylenedioxy)benzene.

Colourless or slightly yellow, oily liquid, with the odour of sassafras, insoluble in water, very soluble in ethanol (96 per cent), miscible with hexane.

d_{20}^{20}: 1.095 to 1.096.

n_D^{20}: 1.537 to 1.538.

bp: 232 °C to 234 °C.

Freezing point: about 11 °C.

Safrole used in gas chromatography complies with the following additional test.

Assay. Gas chromatography (*2.2.28*) as prescribed in the monograph *Cinnamon bark oil, Ceylon (1501)*.

Content: minimum 96.0 per cent, calculated by the normalisation procedure.

Salicin. $C_{13}H_{18}O_7$. (M_r 286.3). *1131300.* [138-52-3]. 2-(Hydroxymethyl)phenyl-β-D-glucopyranoside. Salicoside.

$[\alpha]_D^{20}$: − 62.5 ± 2.

mp: 199 °C to 201 °C.

Assay. Liquid chromatography (*2.2.29*) as prescribed in the monograph *Willow bark (1583)* at the concentration of the reference solution.

Content: minimum 99.0 per cent, calculated by the normalisation procedure.

Salicylaldehyde. $C_7H_6O_2$. (M_r 122.1). *1075400.* [90-02-8]. 2-Hydroxybenzaldehyde.

Clear, colourless, oily liquid.

d_{20}^{20}: about 1.167.

n_D^{20}: about 1.574.

bp: about 196 °C.

mp: about − 7 °C.

Salicylaldehyde azine. $C_{14}H_{12}N_2O_2$. (M_r 240.3). *1075500.* [959-36-4]. 2,2′-Azinodimethyldiphenol.

Dissolve 0.30 g of *hydrazine sulfate R* in 5 mL of *water R*, add 1 mL of *glacial acetic acid R* and 2 mL of a freshly prepared 20 per cent *V/V* solution of *salicylaldehyde R* in *2-propanol R*. Mix, allow to stand until a yellow precipate is formed. Shake with two quantities, each of 15 mL, of *methylene chloride R*. Combine the organic layers and dry over *anhydrous sodium sulfate R*. Decant or filter the solution and evaporate to dryness. Recrystallise from a mixture of 40 volumes of *methanol R* and 60 volumes of *toluene R* with cooling. Dry the crystals *in vacuo*.

mp: about 213 °C.

Chromatography. Thin-layer chromatography (*2.2.27*) as prescribed in the test for hydrazine in the monograph *Povidone (0685)*; the chromatogram shows only one principal spot.

Salicylic acid. *1075600.* [69-72-7].

See *Salicylic acid (0366)*.

Salvianolic acid B. $C_{36}H_{30}O_{16}$. (M_r 719). *1184600.* [121521-90-2]. (2*R*)-2-[[(2*E*)-3-[(2*S*,3*S*)-3-[[(1*R*)-1-Carboxy-2-(3,4-dihydroxyphenyl)ethoxy]carbonyl]-2-(3,4-dihydroxyphenyl)-7-hydroxy-2,3-dihydrobenzofuran-4-yl]prop-2-enoyl]oxy]-3-(3,4-dihydroxyphenyl)propanoic acid.

Sand. *1075800.*

White or slightly greyish grains of silica with a particle size between 150 µm and 300 µm.

Sarafloxacin hydrochloride. $C_{20}H_{18}ClF_2N_3O_3$. (M_r 421.8). *1181400.* [91296-87-6]. 6-Fluoro-1-(4-fluorophenyl)-4-oxo-7-piperazin-1-yl-1,4-dihydroquinoline-3-carboxylic acid hydrochloride.

Schisandrin. $C_{24}H_{32}O_7$. (M_r 432.5). *1173800.* [7432-28-2]. Schisandrol A. Wuweizichun A. (6*S*,7*S*,12aR_a)-5,6,7,8-Tetrahydro-1,2,3,10,11,12-hexamethoxy-6,7-dimethyldibenzo[*a*,*c*]cyclooctan-6-ol.

White or almost white, crystalline powder.

Schisandrin used in the assay in the monograph *Schisandra fruit (2428)* complies with the following additional test.

Assay. Liquid chromatography (*2.2.29*) as prescribed in the monograph *Schisandra fruit (2428)*.

Content: minimum 95 per cent, calculated by the normalisation procedure.

Storage: in an airtight container, at − 20 °C or below.

γ-Schisandrin. $C_{23}H_{28}O_6$. (M_r 400.5). *1173900.* [61281-37-6]. Schisandrin B. Wuweizisu B. *rac*-(6*R*,7*S*,13aR_a)-1,2,3,13-Tetramethoxy-6,7-dimethyl-5,6,7,8-tetrahydrobenzo[3,4]cycloocta[1,2-*f*][1,3]benzodioxole.

White or almost white, crystalline powder.

Storage: in an airtight container, at − 20 °C or below.

Sclareol. $C_{20}H_{36}O_2$. (M_r 308.5). *1139900.* [515-03-7]. (1*R*,2*R*,4a*S*,8a*S*)-1-[(3*R*)-3-Hydroxy-3-methylpent-4-enyl]-2,5,5,8a-tetramethyldecahydronaphthalen-2-ol.

Odourless crystals.

$[\alpha]_D^{20}$: 6.7, determined with a solution in anhydrous ethanol.

$bp_{19\ mm}$: 218 °C to 220 °C.

mp: 96 °C to 98 °C.

Sclareol used in the chromatographic profile test in the monograph Clary sage oil (1850) complies with the following additional test.

Assay. Gas chromatography (*2.2.28*) as prescribed in the monograph *Clary sage oil (1850)*.

Content: minimum 97 per cent, calculated by the normalisation procedure.

Scopoletin. $C_{10}H_8O_4$. (M_r 192.2). *1158700.* [92-61-5]. 7-Hydroxy-6-methoxy-2*H*-1-benzopyran-2-one. 7-Hydroxy-6-methoxycoumarin.

Faintly beige, fine crystals.

mp: 202 °C to 208 °C.

SDS-PAGE running buffer. *1114900.*

Dissolve 151.4 g of *tris(hydroxymethyl)aminomethane R*, 721.0 g of *glycine R* and 50.0 g of *sodium laurilsulfate R* in *water R* and dilute to 5000 mL with the same solvent. Immediately before use, dilute to 10 times its volume with *water R* and mix. Measure the pH (*2.2.3*) of the diluted solution. The pH is between 8.1 and 8.8.

SDS-PAGE sample buffer (concentrated). *1115000.*

Dissolve 1.89 g of *tris(hydroxymethyl)aminomethane R*, 5.0 g of *sodium laurilsulfate R* and 50 mg of *bromophenol blue R* in *water R*. Add 25.0 mL of *glycerol R* and dilute to 100 mL with *water R*. Adjust the pH to 6.8 with *hydrochloric acid R*, and dilute to 125 mL with *water R*.

SDS-PAGE sample buffer for reducing conditions (concentrated). *1122100.*

Dissolve 3.78 g of *tris(hydroxymethyl)aminomethane R*, 10.0 g of *sodium dodecyl sulfate R* and 100 mg of *bromophenol blue R* in *water R*. Add 50.0 mL of *glycerol R* and dilute to 200 mL with *water R*. Add 25.0 mL of *2-mercaptoethanol R*. Adjust to pH 6.8 with *hydrochloric acid R*, and dilute to 250.0 mL with *water R*.

Alternatively, dithiothreitol may be used as reducing agent instead of 2-mercaptoethanol. In this case prepare the sample buffer as follows: dissolve 3.78 g of *tris(hydroxymethyl)aminomethane R*, 10.0 g of *sodium dodecyl sulfate R* and 100 mg of *bromophenol blue R* in *water R*. Add 50.0 mL of *glycerol R* and dilute to 200 mL with *water R*. Adjust to pH 6.8 with *hydrochloric acid R*, and dilute to 250.0 mL with *water R*. Immediately before use, add *dithiothreitol R* to a final concentration of 100 mM.

Selenious acid. H_2SeO_3. (M_r 129.0). *1100200.* [7783-00-8].

Deliquescent crystals, freely soluble in water.

Storage: in an airtight container.

Selenium. Se. (A_r 79.0). *1075900.* [7782-49-2].

Brown-red or black powder or granules, practically insoluble in water and in ethanol (96 per cent), soluble in nitric acid.

mp: about 220 °C.

Serine. *1076000.* [56-45-1].

See *Serine (0788)*.

Sialic acid. *1001100.* [131-48-6].

See *N-acetylneuraminic acid R*.

Silibinin. $C_{25}H_{22}O_{10}$. (M_r 482.4). *1151400.* [22888-70-6]. Silybin. (2*R*,3*R*)-3,5,7-Trihydroxy-2-[(2*R*,3*R*)-3-(4-hydroxy-3-methoxyphenyl)-2-(hydroxymethyl)-2,3-dihydro-1,4-benzodioxin-6-yl]-2,3-dihydro-4*H*-1-benzopyran-4-one.

White or yellowish powder, practically insoluble in water, soluble in acetone and in methanol.

Silibinin used in the assay of Milk thistle fruit (1860) complies with the following additional test.

Assay. Liquid chromatography (*2.2.29*) as prescribed in the monograph *Milk thistle fruit (1860)*.

Test solution. Dissolve 5.0 mg of silibinin, dried *in vacuo*, in *methanol R* and dilute to 50.0 mL with the same solvent.

Silibinin A and silibinin B content: minimum 95.0 per cent, calculated by the normalisation procedure.

Silica gel π-acceptor/π-donor for chiral separations. *1160100.*

A very finely divided silica gel for chromatography consisting of spherical particles to which 1-(3,5-dinitrobenzamido)-1,2,3,4-tetrahydrophenantrene has been covalently bound, showing both π-electron acceptor and π-electron donor characteristics. The particle size and the configuration are indicated after the name of the reagent in the tests where it is used.

Silica gel for chiral separation, amylose derivative of. *1171700.*

A very finely divided silica gel for chromatography (5 µm) coated with the following derivative:

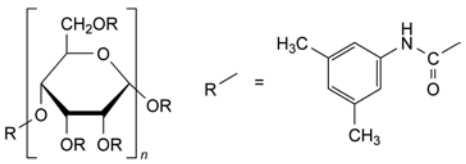

Silica gel for chiral separation, cellulose derivative of. *1110300.*

A very finely divided silica gel for chromatography (5 µm) coated with the following derivative:

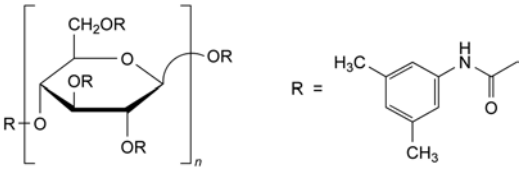

Silica gel AD for chiral separation. *1171700.*

See *Amylose derivative of silica gel for chiral separation R.*

Silica gel AGP for chiral chromatography. *1148700.*

See *α1-Acid-glycoprotein silica gel for chiral separation R.*

Silica gel, anhydrous. *1076100.* [112926-00-8].

Partly dehydrated polymerised, amorphous silicic acid, absorbing at 20 °C about 30 per cent of its mass of water. Practically insoluble in water, partly soluble in solutions of sodium hydroxide. It contains a suitable indicator for detection of the humidity status, for which the colour change from the hydrated to anhydrous form is given on the label.

Silica gel BC for chiral chromatography. *1161300.*

A very finely divided silica gel for chromatography (5 µm) coated with β-cyclodextrin. Higher selectivity may be obtained when cyclodextrin has been derivatized with propylene oxide.

Silica gel for chiral chromatography, urea type. *1181000.*

A very finely divided silica gel (5 µm) coated with the following derivative:

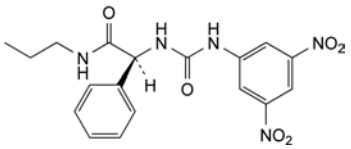

Silica gel for chromatography. *1076900.*

A very finely divided (3-10 µm) silica gel. The particle size is indicated after the name of the reagent in the tests where it is used.

Fine, white or almost white, homogeneous powder, practically insoluble in water and in ethanol (96 per cent).

Silica gel for chromatography, alkyl-bonded for use with highly aqueous mobile phases. *1160200.*

A very finely divided silica gel with bonded alkyl groups suitable for use with highly aqueous mobile phases.

Silica gel for chromatography, alkyl-bonded for use with highly aqueous mobile phases, end-capped. *1176900.*

A very finely divided silica gel with bonded alkyl groups suitable for use with highly aqueous mobile phases. To minimise any interaction with basic compounds it is carefully end-capped to cover most of the remaining silanol groups. The particle size is indicated after the name of the reagent in the tests where it is used.

Silica gel for chromatography, amidohexadecylsilyl. *1170400.*

A very finely divided silica gel with a fine particle size, chemically modified at the surface by the bonding of amidohexadecylsilyl groups. The particle size is indicated after the name of the reagent in the test where it is used.

Silica gel for chromatography, aminohexadecylsilyl. *1138400.*

A very finely divided (3-10 µm) silica gel with a fine particle size chemically modified at the surface by the bonding of aminohexadecylsilyl groups. The particle size is indicated after the name of the reagent in the test where it is used.

Fine, white or almost white, homogeneous powder, practically insoluble in water and in ethanol (96 per cent).

Silica gel for chromatography, aminopropylmethylsilyl. *1102400.*

Silica gel with a fine particle size (between 3 µm and 10 µm), chemically modified by bonding aminopropylmethylsilyl groups on the surface. The particle size is indicated after the name of the reagent in the tests where it is used.

Fine, white or almost white, homogeneous powder, practically insoluble in water and in ethanol (96 per cent).

Silica gel for chromatography, aminopropylsilyl. *1077000.*

Silica gel with a fine particle size (between 3 µm and 10 µm), chemically modified by bonding aminopropylsilyl groups on the surface. The particle size is indicated after the name of the reagent in the tests where it is used.

Fine, white or almost white, homogeneous powder, practically insoluble in water and in ethanol (96 per cent).

Silica gel for chromatography, aminopropylsilyl R1. *1077001.*

Silica gel with a particle size of about 55 µm, chemically modified by bonding aminopropylsilyl groups on the surface.

Silica gel for chromatography, amylose derivative of. *1109800.*

A very finely divided (10 µm) silica gel, chemically modified at the surface by the bonding of an amylose derivative. The particle size is indicated after the name of the reagent in the test where it is used.

Fine, white or almost white, homogenous powder, practically insoluble in water and in ethanol (96 per cent).

Silica gel for chromatography, butylsilyl. *1076200.*

A very finely divided silica gel (3-10 µm), chemically modified at the surface by the bonding of butylsilyl groups. The particle size is indicated after the name of the reagent in the tests where it is used.

Fine, white or almost white, homogeneous powder, practically insoluble in water and in ethanol (96 per cent).

Spheroidal silica: 30 nm.

Pore volume: 0.6 cm^3/g.

Specific surface area: 80 m^2/g.

Silica gel for chromatography, butylsilyl, end-capped. *1170500.*

A very finely divided silica (3-10 µm), chemically modified at the surface by the bonding of butylsilyl groups. To minimise any interaction with basic compounds, it is carefully end-capped to cover most of the remaining silanol groups. The particle size is indicated after the name of the reagent in the tests where it is used.

Fine, white or almost white, homogenous powder, practically insoluble in water and in ethanol (96 per cent).

Silica gel for chromatography, crown-ether. *1178000.*

Stationary phase for liquid chromatography.

Crown ether coated on silica gel.

Silica gel for chromatography, cyanosilyl. *1109900.*

A very finely divided silica gel chemically modified at the surface by the bonding of cyanosilyl groups. The particle size is indicated after the name of the reagent in the tests where it is used.

Fine, white or almost white, homogeneous powder, practically insoluble in water and in ethanol (96 per cent).

Silica gel for chromatography, di-isobutyloctadecylsilyl. *1140000.*

A very finely divided silica gel chemically modified at the surface by the bonding of di-isobutyloctadecylsilyl groups. The particle size is indicated after the name of the reagent in the tests where it is used.

Silica gel for chromatography, diisopropylcyanopropylsilyl. *1168100.*

A very finely divided silica gel chemically modified at the surface by the bonding of diisopropylcyanopropylsilyl groups. The particle size is indicated after the name of the reagent in which the test is used.

Silica gel for chromatography, dimethyloctadecylsilyl. *1115100.*

A very finely divided silica gel (3-10 µm), chemically modified at the surface by the bonding of dimethyloctadecylsilyl groups. The particle size is indicated after the name of the reagent in the tests where it is used.

Fine, white or almost white, homogeneous powder, practically insoluble in water and in ethanol (96 per cent). Irregular particle size.

Specific surface area: 300 m^2/g.

Silica gel for chromatography, diol. *1110000.*

Spherical silica particles to which dihydroxypropyl groups are bonded. Pore size 10 nm.

Silica gel for chromatography, dodecylsilyl, end-capped. *1179700.*

A very finely divided silica gel, chemically modified at the surface by the introduction of dodecylsilyl groups. To minimise any interaction with basic compounds, it is carefully end-capped to cover most of the remaining silanol groups.

Silica gel for chromatography, hexadecylamidylsilyl. *1162500.*

A very finely divided (5 µm) silica gel, chemically modified at the surface by the introduction of hexadecylcarboxamidopropyldimethylsilyl groups.

Silica gel for chromatography, hexadecylamidylsilyl, end-capped. *1172400.*

A very finely divided (5 µm) silica gel, chemically modified at the surface by the introduction of hexadecylcarboxamidopropyldimethylsilyl groups. To minimise any interaction with basic compounds it is carefully end-capped to cover most of the remaining silanol groups.

Silica gel for chromatography, hexylsilyl. *1077100.*

A very finely divided (3-10 µm) silica gel, chemically modified at the surface by the bonding of hexylsilyl groups. The particle size is indicated after the name of the reagent in the tests where it is used.

Fine, white or almost white, homogeneous powder, practically insoluble in water and in ethanol (96 per cent).

Silica gel for chromatography, hexylsilyl, end-capped. *1174400.*

A very finely divided (3-10 µm) silica gel, chemically modified at the surface by the bonding of hexylsilyl groups. To minimise any interaction with basic compounds it is carefully end-capped to cover most of the remaining silanol groups. The particle size is indicated after the name of the reagent in the tests where it is used.

A fine, white or almost white, homogeneous powder, practically insoluble in water and in ethanol (96 per cent).

Silica gel for chromatography, human albumin coated. *1138500.*

A very finely divided (3-10 µm) silica gel, chemically modified at the surface by the bonding of human albumin. The particle size is indicated after the name of the reagent in the tests where it is used.

White or almost white, fine, homogeneous powder.

Silica gel for chromatography, hydrophilic. *1077200.*

A very finely divided (3-10 µm) silica gel whose surface has been modified to provide hydrophilic characteristics. The particle size may be stated after the name of the reagent in the tests where it is used.

Silica gel for chromatography, nitrile. *1077300.*

A very finely divided silica gel, chemically modified at the surface by the bonding of cyanopropylsilyl groups. The particle size is indicated after the name of the reagent in the test where it is used.

Fine white or almost white, homogenous powder, practically insoluble in water and in ethanol (96 per cent).

Silica gel for chromatography, nitrile R1. *1077400.*

A very finely divided silica gel consisting of porous, spherical particles with chemically bonded nitrile groups. The particle size is indicated after the name of the reagent in the test where it is used.

Fine, white or almost white, homogeneous powder, practically insoluble in water and in ethanol (96 per cent).

Silica gel for chromatography, nitrile R2. *1119500.*

Ultrapure silica gel, chemically modified at the surface by the introduction of cyanopropylsilyl groups. Less than 20 ppm of metals. The particle size is indicated after the name of the reagent in the tests where it is used.

Fine white or almost white, homogenous powder, practically insoluble in water and in ethanol (96 per cent).

Silica gel for chromatography, nitrile, end-capped. *1174500.*

A very finely divided silica gel, chemically modified at the surface by the bonding of cyanopropylsilyl groups. To minimise any interaction with basic components it is carefully end-capped to cover most of the remaining silanol groups. The particle size is indicated after the name of the reagent in the test where it is used.

A fine, white or almost white, homogenous powder, practically insoluble in water and in anhydrous ethanol.

Silica gel for chromatography, 4-nitrophenylcarbamidesilyl. *1185200.*

A very finely divided silica gel, chemically modified at the surface by bonding of 4-nitrophenylcarbamide groups. The particle size is indicated after the name of the reagent in the tests where it is used.

Fine, white or almost white, homogeneous powder, practically insoluble in water and in ethanol (96 per cent).

Silica gel for chromatography, octadecanoylaminopropylsilyl. *1115200.*

A very finely divided (3-10 µm) silica gel, chemically modified at the surface by the bonding of aminopropylsilyl groups which are acylated with octadecanoyl groups. The particle size is indicated after the name of the reagent in the tests where it is used.

Fine, white or almost white, homogeneous powder, practically insoluble in water and in ethanol (96 per cent).

Silica gel for chromatography, octadecylsilyl. *1077500.*

A very finely divided (3-10 µm) silica gel, chemically modified at the surface by the bonding of octadecylsilyl groups. The particle size is indicated after the name of the reagent in the tests where it is used.

Fine, white or almost white, homogeneous powder, practically insoluble in water and in ethanol (96 per cent).

Silica gel for chromatography, octadecylsilyl R1. *1110100.*

A very finely divided ultrapure silica gel, chemically modified at the surface by the bonding of octadecylsilyl groups. The particle size, the pore size and the carbon loading are indicated after the name of the reagent in the tests where it is used. Less than 20 ppm of metals.

Silica gel for chromatography, octadecylsilyl R2. *1115300.*

A very finely divided (15 nm pore size) ultrapure silica gel, chemically modified at the surface by the bonding of octadecylsilyl groups (20 per cent carbon load), optimised for the analysis of polycyclic aromatic hydrocarbons. The particle size is indicated after the name of the reagent in the tests where it is used.

Fine, white or almost white, homogeneous powder, practically insoluble in water and in ethanol (96 per cent).

Silica gel for chromatography, octadecylsilyl, base-deactivated. *1077600.*

A very finely divided (3-10 µm) silica gel, pretreated before the bonding of octadecylsilyl groups by careful washing and hydrolysing most of the superficial siloxane bridges to minimise the interaction with basic components. The particle size is indicated after the name of the reagent in the tests where it is used.

Fine, white or almost white, homogeneous powder, practically insoluble in water and in ethanol (96 per cent).

Silica gel for chromatography, octadecylsilyl, end-capped. *1115400.*

A very finely divided (3-10 µm) silica gel, chemically modified at the surface by the bonding of octadecylsilyl groups. To minimise any interaction with basic compounds it is carefully end-capped to cover most of the remaining silanol groups. The particle size is indicated after the name of the reagent in the tests where it is used.

Fine, white or almost white, homogenous powder, practically insoluble in water and in ethanol (96 per cent).

Silica gel for chromatography, octadecylsilyl, end-capped R1. *1115401.*

A very finely divided (10 nm pore size) ultrapure silica gel, chemically modified at the surface by the bonding of octadecylsilyl groups (19 per cent carbon load). To minimise any interaction with basic compounds it is carefully end-capped to cover most of the remaining silanol groups. The particle size is indicated after the name of the reagent in the tests where it is used. It contains less than 20 ppm of metals.

Silica gel for chromatography, octadecylsilyl, end-capped, base-deactivated. *1108600.*

A very finely divided (3-10 µm) silica gel with a pore size of 10 nm and a carbon loading of 16 per cent, pre-treated before the bonding of octadecylsilyl groups by washing and hydrolysing most of the superficial siloxane bridges. To further minimise any interaction with basic compounds it is carefully end-capped to cover most of the remaining silanol groups. The particle size is indicated after the name of the reagent in the test where it is used.

Fine, white or almost white, homogeneous powder, practically insoluble in water and in ethanol (96 per cent).

Silica gel for chromatography, octadecylsilyl, end-capped, base-deactivated R1. *1162600.*

A very finely divided (3-10 µm) silica gel pre-treated before the bonding of octadecylsilyl groups by washing and hydrolysing most of the superficial siloxane bridges. To further minimise any interaction with basic compounds it is carefully end-capped to cover most of the remaining silanol groups. The particle size is indicated after the name of the reagent in the test where it is used.

Fine, white or almost white, homogeneous powder, practically insoluble in water and in ethanol (96 per cent).

Silica gel for chromatography, octadecylsilyl, monolithic. *1154500.*

Monolithic rods of highly porous (greater than 80 per cent) metal-free silica with a bimodal pore structure, modified at the surface by the bonding of octadecylsilyl groups.

Silica gel for chromatography, octadecylsilyl, with embedded polar groups, end-capped. *1177900.*

A very finely divided silica gel (3-10 µm). The particles are based on a mixture of silica chemically modified at the surface by the bonding of octadecylsilyl groups and silica chemically modified with a reagent providing a surface with chains having embedded polar groups. Furthermore, the packing material is end-capped. The particle size is indicated after the name of the reagent in the tests where it is used.

Silica gel for chromatography, octadecylsilyl, with polar incorporated groups, end-capped. *1165100.*

A very finely divided silica gel (3-10 µm). The particles are based on silica, chemically modified with a reagent providing a surface with chains having polar incorporated groups and terminating octadecyl groups. Furthermore, the packing material is end-capped. The particle size is indicated after the name of the reagent in the tests where it is used.

Fine, white or almost white, homogeneous powder.

Silica gel for chromatography, octylsilyl. *1077700.*

A very finely divided (3-10 µm) silica gel, chemically modified at the surface by the bonding of octylsilyl groups. The particle size is indicated after the name of the reagent in the tests where it is used.

Fine, white or almost white, homogeneous powder, practically insoluble in water and in ethanol (96 per cent).

Silica gel for chromatography, octylsilyl R1. *1077701.*

A very finely divided (3-10 µm) silica gel, chemically modified at the surface by the bonding of octylsilyl and methyl groups (double bonded phase). The particle size is indicated after the name of the reagent in the tests where it is used.

Fine, white or almost white, homogeneous powder, practically insoluble in water and in ethanol (96 per cent).

Silica gel for chromatography, octylsilyl R2. *1077702.*

Ultrapure very finely divided (10 nm pore size) silica gel, chemically modified at the surface by the bonding of octylsilyl groups (19 per cent carbon load). Less than 20 ppm of metals.

Silica gel for chromatography, octylsilyl R3. *1155200.*

A very finely divided ultrapure silica gel, chemically modified at the surface by the bonding of octylsilyl groups and sterically protected with branched hydrocarbons at the silanes. The particle size is indicated after the name of the reagent in the tests where it is used.

Silica gel for chromatography, octylsilyl, base-deactivated. *1131600.*

A very finely divided (3-10 µm) silica gel, pretreated before the bonding of octylsilyl groups by careful washing and hydrolysing most of the superficial siloxane bridges to minimise the interaction with basic components. The particle size is indicated after the name of the reagent in the tests where it is used.

Fine, white or almost white, homogeneous powder, practically insoluble in water and in ethanol (96 per cent).

Silica gel for chromatography, octylsilyl, end-capped. *1119600.*

A very finely divided (3-10 µm) silica gel, chemically modified at the surface by the bonding of octylsilyl groups. To minimise any interaction with basic compounds, it is carefully end-capped to cover most of the remaining silanol groups. The particle size is indicated after the name of the reagent in the tests where it is used.

Fine, white or almost white, homogeneous powder, practically insoluble in water and in ethanol (96 per cent).

Silica gel for chromatography, octylsilyl, end-capped, base-deactivated. *1148800.*

A very finely divided (3-10 µm) silica gel, pre-treated before the bonding of octylsilyl groups by washing and hydrolysing most of the superficial siloxane bridges. To further minimise any interaction with basic compounds it is carefully end-capped to cover most of the remaining silanol groups. The particle size is indicated after the name of the reagent in the test where it is used.

Fine, white or almost white, homogeneous powder, practically insoluble in water and in ethanol (96 per cent).

Silica gel for chromatography, octylsilyl, with polar incorporated groups, end-capped. *1152600.*

A very finely divided silica gel (3-10 µm). The particles are based on silica, chemically modified with a reagent providing a surface with chains having polar incorporated groups and terminating octyl groups. Furthermore, the packing material is end-capped. The particle size is indicated after the name of the reagent in the tests where it is used.

Fine, white or almost white, homogeneous powder.

Silica gel for chromatography, oxypropionitrilsilyl. *1184700.*

A very finely divided silica gel chemically modified at the surface by the bonding of oxypropionitrilsilyl groups. The particle size is indicated after the name of the reagent in the tests where it is used.

Silica gel for chromatography, palmitamidopropylsilyl, end-capped. *1161900.*

A very finely divided (3-10 µm) silica gel, chemically modified at the surface by the bonding of palmitamidopropyl groups and end-capped with acetamidopropyl groups. The particle size is indicated after the name of the reagent in the tests where it is used.

Fine, white or almost white, homogeneous powder, practically insoluble in water and in ethanol (96 per cent).

Silica gel for chromatography, phenylhexylsilyl. *1153900.*

A very finely divided silica gel, chemically modified at the surface by the bonding of phenylhexyl groups. The particle size is indicated after the name of the reagent in the tests where it is used.

Silica gel for chromatography, phenylhexylsilyl, end-capped. *1170600.*

A very finely divided silica gel (3 µm), chemically modified at the surface by the bonding of phenylhexylsilyl groups. To minimise any interaction with basic compounds, it is carefully end-capped to cover most of the remaining silanol groups. The particle size is indicated after the name of the reagent in the tests where it is used.

Silica gel for chromatography, phenylsilyl. *1110200.*

A very finely divided silica gel, chemically modified at the surface by the bonding of phenyl groups. The particle size is indicated after the name of the reagent in the tests where it is used.

Silica gel for chromatography, phenylsilyl R1. *1075700.*

A very finely divided silica gel (5 µm), chemically modified at the surface by the bonding of phenyl groups. The particle size is indicated after the name of the reagent in the tests where it is used.

Fine, white or almost white, homogeneous powder, practically insoluble in water, in ethanol (96 per cent) and in methylene chloride.

Spheroidal silica: 8 nm.

Specific surface area: 180 m^2/g.

Carbon loading: 5.5 per cent.

Silica gel for chromatography, phenylsilyl, end-capped. *1154900.*

A very finely divided (5-10 µm) silica gel, chemically modified at the surface by the bounding of phenyl groups. To minimise any interaction with basic compounds it is carefully end-capped to cover most of the remaining silanol groups. The particle size is indicated after the name of the reagent in the tests where it is used.

Silica gel for chromatography, propoxybenzene, end-capped. *1174600.*

A very finely divided (3-10 µm) silica gel, chemically modified at the surface by the bonding of propoxybenzene groups. The particle size is indicated after the name of the reagent in the test where it is used.

Silica gel for chromatography, propylsilyl. *1170700.*

A very finely divided silica gel (3-10 µm), chemically modified at the surface by the bonding of propylsilyl groups. The particle size is indicated after the name of the reagent in the test where it is used.

Silica gel for chromatography, strong-anion-exchange. *1077800.*

A very finely divided (3-10 µm) silica gel, chemically modified at the surface by the bonding of quaternary ammonium groups. The particle size is indicated after the name of the reagent in the tests where it is used.

Fine, white or almost white, homogeneous powder, practically insoluble in water and in ethanol (96 per cent).

pH limit of use: 2 to 8.

Silica gel for chromatography, strong cation-exchange. *1161400.*

A very finely divided (5-10 µm) silica gel, chemically modified at the surface by the bonding of sulfonic acid groups. The particle size is specified after the name of the reagent in the tests where it is used.

Silica gel for chromatography, trimethylsilyl. *1115500.*

A very finely divided (3-10 µm) silica gel, chemically modified at the surface by the bonding of trimethylsilyl groups. The particle size is indicated after the name of the reagent in the tests where it is used.

Fine, white or almost white, homogeneous powder, practically insoluble in water and in ethanol (96 per cent).

Silica gel for size-exclusion chromatography. *1077900.*

A very finely divided silica gel (10 µm) with a very hydrophilic surface. The average diameter of the pores is about 30 nm. It is compatible with aqueous solutions between pH 2 and 8 and with organic solvents. It is suitable for the separation of proteins with relative molecular masses of 1×10^3 to 3×10^5.

Silica gel G. *1076300.* [112926-00-8].

Contains about 13 per cent of calcium sulfate hemihydrate.

Fine, white or almost white, homogeneous powder with a particle size of about 15 µm.

Calcium sulfate content. Place 0.25 g in a ground-glass stoppered flask, add 3 mL of *dilute hydrochloric acid R* and 100 mL of *water R* and shake vigorously for 30 min.

Filter through a sintered-glass filter (*2.1.2*) and wash the residue. Carry out on the combined filtrate and washings the complexometric assay of calcium (*2.5.11*).

1 mL of *0.1 M sodium edetate* is equivalent to 14.51 mg of $CaSO_4,{}^1/_2H_2O$.

pH (*2.2.3*). Shake 1 g for 5 min with 10 mL of *carbon dioxide-free water R*. The pH of the suspension is about 7.

Silica gel GF_{254}. *1076400.* [112926-00-8].

Contains about 13 per cent of calcium sulfate hemihydrate and about 1.5 per cent of a fluorescent indicator having an optimal intensity at 254 nm.

Fine, white or almost white, homogeneous powder with a particle size of about 15 µm.

Calcium sulfate content. Determine by the method prescribed for *silica gel G R*.

pH (2.2.3). Complies with the test prescribed for *silica gel G R*.

Fluorescence. Thin-layer chromatography (*2.2.27*) using *silica gel GF_{254} R* as the coating substance. Apply separately to the plate at ten points increasing volumes from 1 µL to 10 µL of a 1 g/L solution of *benzoic acid R* in a mixture of 10 volumes of *anhydrous formic acid R* and 90 volumes of *2-propanol R*. Develop over a path of 10 cm with the same mixture of solvents. After evaporating the solvents examine the chromatogram in ultraviolet light at 254 nm. The benzoic acid appears as dark spots on a fluorescent background in the upper third of the chromatogram for quantities of 2 µg and greater.

Silica gel H. *1076500.* [112926-00-8].

Fine, white or almost white, homogeneous powder with a particle size of about 15 µm.

pH (2.2.3). Complies with the test prescribed for *silica gel G R*.

Silica gel H, silanised. *1076600.*

Preparation of a thin layer. See *silanised silica gel HF_{254} R*.

A fine, white or almost white homogeneous powder which, after being shaken with water, floats on the surface because of its water-repellent properties.

Chromatographic separation. Complies with the test prescribed for *silanised silica gel HF_{254} R*.

Silica gel HF_{254}. *1076700.*

Contains about 1.5 per cent of a fluorescent indicator having an optimal intensity at 254 nm.

Fine, white or almost white, homogeneous powder with a particle size of about 15 µm.

pH. Complies with the test prescribed for *silica gel G R*.

Fluorescence. Complies with the test prescribed for *silica gel GF_{254} R*.

Silica gel HF_{254}, silanised. *1076800.*

Contains about 1.5 per cent of a fluorescent indicator having an optimal intensity at 254 nm.

Fine, white or almost white, homogeneous powder which, after shaking with water, floats on the surface because of its water-repellent properties.

Preparation of a thin layer. Vigorously shake 30 g for 2 min with 60 mL of a mixture of 1 volume of *methanol R* and 2 volumes of *water R*. Coat carefully cleaned plates with a layer 0.25 mm thick using a spreading device. Allow the coated plates to dry in air and then heat in an oven at 100 °C to 105 °C for 30 min.

Chromatographic separation. Introduce 0.1 g each of *methyl laurate R*, *methyl myristate R*, *methyl palmitate R* and *methyl stearate R* into a 250 mL conical flask. Add 40 mL of *alcoholic potassium hydroxide solution R* and heat under a reflux condenser on a water-bath for 1 h. Allow to cool, transfer the solution to a separating funnel by means of 100 mL of *water R*, acidify (pH 2 to 3) with *dilute hydrochloric acid R* and shake with three quantities, each of 10 mL of *chloroform R*. Dry the combined chloroform extracts over *anhydrous sodium sulfate R*, filter and evaporate to dryness on a water-bath. Dissolve the residue in 50 mL of *chloroform R*. Examine by thin-layer chromatography (*2.2.27*), using silanised silica gel HF_{254} as the coating substance. Apply to the plate at each of three separate points 10 µL of the chloroformic solution. Develop over a path of 14 cm with a mixture of 10 volumes of *glacial acetic acid R*, 25 volumes of *water R* and 65 volumes of *dioxan R*. Dry the plate at 120 °C for 30 min. Allow to cool, spray with a 35 g/L solution of *phosphomolybdic acid R* in *2-propanol R* and heat at 150 °C until the spots become visible. Treat the plate with ammonia vapour until the background is white. The chromatograms show four clearly separated, well-defined spots.

Silica gel OC for chiral separations. *1146800.*

A very finely divided silica gel for chromatography (5 µm) coated with the following derivative:

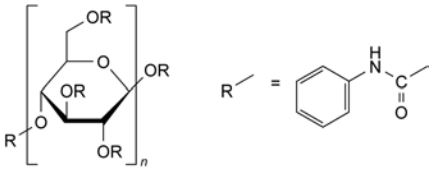

Silica gel OD for chiral separations. *1110300.*

See *Cellulose derivative of silica gel for chiral separation R*.

Silica gel OJ for chiral separations. *1179800.*

A very finely divided silica gel for chromatography consisting of spherical particles coated with cellulose tris(4-methylbenzoate). The particle size is indicated after the name of the reagent in the test where it is used.

Silicotungstic acid. $H_4SiW_{12}O_{40},xH_2O$. *1078000.* [11130-20-4].

White or yellowish-white crystals, deliquescent, very soluble in water and in ethanol (96 per cent).

Storage: in an airtight container.

Silicristin. $C_{25}H_{22}O_{10}$. (M_r 482.4). *1151500.* [33889-69-9]. (2*R*,3*R*)-3,5,7-Trihydroxy-2-[(2*R*,3*S*)-7-hydroxy-2-(4-hydroxy-3-methoxyphenyl)-3-hydroxymethyl-2,3-dihydro-1-benzofuran-5-yl]chroman-4-one.

White or yellowish powder, practically insoluble in water, soluble in acetone and in methanol.

Silidianin. $C_{25}H_{22}O_{10}$. (M_r 482.4). *1151600.* [29782-68-1]. (3*R*,3a*R*,6*R*,7a*R*,8*R*)-7a-Hydroxy-8-(4-hydroxy-3-methoxyphenyl)-4-[(2*R*, 3*R*)-3,5,7-trihydroxy-4-oxochroman-2-yl]-2,3,3a,7a-tetrahydro-3,6-methano-1-benzofuran-7(6a*H*)-one.

White or yellowish powder, practically insoluble in water, soluble in acetone and in methanol.

Silver diethyldithiocarbamate. $C_5H_{10}AgNS_2$. (M_r 256.1). *1110400.* [1470-61-7].

Pale-yellow or greyish-yellow powder, practically insoluble in water, soluble in pyridine.

It may be prepared as follows. Dissolve 1.7 g of *silver nitrate R* in 100 mL of *water R*. Separately dissolve 2.3 g of *sodium diethyldithiocarbamate R* in 100 mL of *water R*. Cool both solutions to 10 °C, then mix and while stirring collect the yellow precipitate on a sintered-glass filter (*2.1.2*) and wash with 200 mL of cold *water R*. Dry the precipitate *in vacuo* for 2-3 h.

Silver diethyldithiocarbamate may be used provided it has not changed in colour or developed a strong odour.

Silver manganese paper. *1078200.*

Immerse strips of slow filter paper into a solution containing 8.5 g/L of *manganese sulfate R* and 8.5 g/L of *silver nitrate R*. Maintain for a few minutes and allow to dry over *diphosphorus pentoxide R* protected from acid and alkaline vapours.

Silver nitrate. *1078300.* [7761-88-8].

See *Silver nitrate (0009)*.

Silver nitrate reagent. *1078305.*

To a mixture of 3 mL of *concentrated ammonia R* and 40 mL of *1 M sodium hydroxide*, add 8 mL of a 200 g/L solution of *silver nitrate R*, dropwise, with stirring. Dilute to 200 mL with *water R*.

Silver nitrate solution R1. *1078301.*

A 42.5 g/L solution.

Storage: protected from light.

Silver nitrate solution R2. *1078302.*

A 17 g/L solution.

Storage: protected from light.

Silver nitrate solution, ammoniacal. *1078303.*

Dissolve 2.5 g of *silver nitrate R* in 80 mL of *water R* and add *dilute ammonia R1* dropwise until the precipitate has dissolved. Dilute to 100 mL with *water R*. Prepare immediately before use.

Silver nitrate solution in pyridine. *1078304.*

An 85 g/L solution in *pyridine R*.

Storage: protected from light.

Silver oxide. Ag_2O. (M_r 231.7). *1078400.* [20667-12-3]. Disilver oxide.

Brownish-black powder, practically insoluble in water and in ethanol (96 per cent), freely soluble in dilute nitric acid and in ammonia.

Storage: protected from light.

Sinensetin. $C_{20}H_{20}O_7$. (M_r 372.4). *1110500.* [2306-27-6]. 3′,4′,5,6,7-Pentamethoxyflavone.

White or almost white, crystalline powder, practically insoluble in water, soluble in ethanol (96 per cent).

mp: about 177 °C.

Absorbance (*2.2.25*). A solution in *methanol R* shows 3 absorption maxima, at 243 nm, 268 nm and 330 nm.

Assay. Liquid chromatography (*2.2.29*) as prescribed in the monograph *Java tea (1229)*.

Content: minimum 95 per cent, calculated by the normalisation procedure.

Sinomenine. $C_{19}H_{23}NO_4$. (M_r 329.4). *1183400.* [115-53-7]. 7,8-Didehydro-4-hydroxy-3,7-dimethoxy-17-methyl-9α,13α,14α-morphinan-6-one. Cucoline.

Sitostanol. $C_{29}H_{52}O$. (M_r 416.7). *1140100.* [19466-47-8]. Dihydro-β-sitosterol.

Content: minimum 95.0 per cent.

β-Sitosterol. $C_{29}H_{50}O$. (M_r 414.7). *1140200.* [83-46-5]. Stigmast-5-en-3β-ol. 22,23-Dihydrostigmasterol.

White or almost white powder, practically insoluble in water, sparingly soluble in tetrahydrofuran.

Content: minimum 75.0 per cent *m/m* (dried substance).

Assay. Gas chromatography (*2.2.28*), as prescribed in the monograph *Phytosterol (1911)*.

Test solution. Dissolve 0.100 g of the substance to be examined in *tetrahydrofuran R* and dilute to 10.0 mL with the same solvent. Introduce 100 µL of this solution into a suitable 3 mL flask and evaporate to dryness under *nitrogen R*. To the residue add 100 µL of a freshly prepared mixture of 50 µL of *1-methylimidazole R* and 1.0 mL of *heptafluoro-N-methyl-N-(trimethylsilyl)butanamide R*. Close the flask tightly and heat at 100 °C for 15 min. Allow to cool.

Injection: 1 µL of the test solution.

Sodium. Na. (A_r 22.99). *1078500.* [7440-23-5].

A metal whose freshly cut surface is bright silver-grey. It rapidly tarnishes in contact with air and is oxidised completely to sodium hydroxide and converted to sodium carbonate. It reacts violently with water, yielding hydrogen and a solution of sodium hydroxide; soluble in anhydrous methanol, yielding hydrogen and a solution of sodium methoxide; practically insoluble in light petroleum.

Storage: under light petroleum or liquid paraffin.

Sodium acetate. *1078600.* [6131-90-4].

See *Sodium acetate trihydrate (0411)*.

Sodium acetate, anhydrous. $C_2H_3NaO_2$. (M_r 82.0). *1078700.* [127-09-3].

Colourless crystals or granules, very soluble in water, sparingly soluble in ethanol (96 per cent).

Loss on drying (*2.2.32*). Not more than 2.0 per cent, determined by drying in an oven at 105 °C.

Sodium arsenite. $NaAsO_2$. (M_r 129.9). *1165900.* [7784-46-5]. Sodium metaarsenite.

Sodium arsenite solution. *1165901.*

Dissolve 5.0 g of *sodium arsenite R* in 30 mL of *1 M sodium hydroxide*. Cool to 0 °C and add, while stirring, 65 mL of *dilute hydrochloric acid R*.

Sodium ascorbate solution. *1078800.* [134-03-2].

Dissolve 3.5 g of *ascorbic acid R* in 20 mL of *1 M sodium hydroxide*. Prepare immediately before use.

Sodium azide. NaN_3. (M_r 65.0). *1078900.* [26628-22-8].

White or almost white, crystalline powder or crystals, freely soluble in water, slightly soluble in ethanol (96 per cent).

Sodium bicarbonate. *1081300.* [144-55-8].

See *sodium hydrogen carbonate R*.

Sodium bismuthate. $NaBiO_3$. (M_r 280.0). *1079000.* [12232-99-4].

Content: minimum 85.0 per cent.

Yellow or yellowish-brown powder, slowly decomposing when moist or at a high temperature, practically insoluble in cold water.

Assay. Suspend 0.200 g in 10 mL of a 200 g/L solution of *potassium iodide R* and add 20 mL of *dilute sulfuric acid R*. Using 1 mL of *starch solution R* as indicator, titrate with *0.1 M sodium thiosulfate* until an orange colour is obtained.

1 mL of *0.1 M sodium thiosulfate* is equivalent to 14.00 mg of $NaBiO_3$.

Sodium bromide. *1154300.* [7647-15-6].

See *Sodium bromide (0190)*.

Sodium butanesulfonate. $C_4H_9NaO_3S$. (M_r 160.2). *1115600.* [2386-54-1].

White or almost white, crystalline powder, soluble in water.

mp: greater than 300 °C.

Sodium calcium edetate. *1174000.* [62-33-9].

See *sodium calcium edetate (0231)*.

Sodium carbonate. *1079200.* [6132-02-1].

See *Sodium carbonate decahydrate (0191)*.

Sodium carbonate, anhydrous. Na_2CO_3. (M_r 106.0). *1079300.* [497-19-8]. Disodium carbonate.

White or almost white powder, hygroscopic, freely soluble in water.

When heated to about 300 °C it loses not more than 1 per cent of its mass.

Storage: in an airtight container.

Sodium carbonate solution. *1079301.*

A 106 g/L solution of *anhydrous sodium carbonate R*.

Sodium carbonate solution R1. *1079302.*

A 20 g/L solution of *anhydrous sodium carbonate R* in *0.1 M sodium hydroxide*.

Sodium carbonate solution R2. *1079303.*

A 40 g/L solution of *anhydrous sodium carbonate R* in *0.2 M sodium hydroxide*.

Sodium carbonate monohydrate. *1131700.* [5968-11-6].

See *Sodium carbonate monohydrate (0192)*.

Sodium cetostearyl sulfate. *1079400.*

See *Sodium cetostearyl sulfate (0847)*.

Sodium chloride. *1079500.* [7647-14-5].

See *Sodium chloride (0193)*.

Sodium chloride solution. *1079502.*

A 20 per cent *m/m* solution.

Sodium chloride solution, saturated. *1079503.*

Mix 1 part of *sodium chloride R* with 2 parts of *water R*, shake from time to time and allow to stand. Before use, decant the solution from any undissolved substance and filter, if necessary.

Sodium citrate. *1079600.* [6132-04-3].

See *Sodium citrate (0412)*.

Sodium cobaltinitrite. $Na_3[Co(NO_2)_6]$. (M_r 403.9). *1079700.* [13600-98-1]. Trisodium hexanitrocobaltate(III).

Orange-yellow powder, freely soluble in water, slightly soluble in ethanol (96 per cent).

Sodium cobaltinitrite solution. *1079701.*

A 100 g/L solution. Prepare immediately before use.

Sodium decanesulfonate. $C_{10}H_{21}NaO_3S$. (M_r 244.3). *1079800.* [13419-61-9].

Crystalline powder or flakes, white or almost white, freely soluble in water, soluble in methanol.

Sodium decyl sulfate. $C_{10}H_{21}NaO_4S$. (M_r 260.3). *1138600.* [142-87-0].

Content: minimum 95.0 per cent.

White or almost white powder, freely soluble in water.

Sodium deoxycholate. $C_{24}H_{39}NaO_4$. (M_r 414.6). *1131800.* [302-95-4]. Sodium 3α,12α-dihydroxy-5β-cholan-24-oate.

Sodium deoxyribonucleate. (About 85 per cent has a relative molecular mass of 2×10^7 or greater). *1079900.* [73049-39-5].

White or almost white, fibrous preparation obtained from calf thymus.

Test for suitability. Dissolve 10 mg in *imidazole buffer solution pH 6.5 R* and dilute to 10.0 mL with the same buffer solution (solution A). Dilute 2.0 mL of solution A to 50.0 mL with *imidazole buffer solution pH 6.5 R*. The absorbance (*2.2.25*) of the solution, measured at 260 nm, is 0.4 to 0.8.

To 0.5 mL of solution A add 0.5 mL of *imidazole buffer solution pH 6.5 R* and 3 mL of perchloric acid (25 g/L $HClO_4$). A precipitate is formed. Centrifuge. The absorbance of the supernatant, measured at 260 nm using a mixture of 1 mL of *imidazole buffer solution pH 6.5 R* and 3 mL of perchloric acid (25 g/L $HClO_4$) as compensation liquid, is not greater than 0.3.

In each of two tubes, place 0.5 mL of solution A and 0.5 mL of a solution of a reference preparation of streptodornase containing 10 IU/mL in *imidazole buffer solution pH 6.5 R*. To one tube add immediately 3 mL of perchloric acid (25 g/L $HClO_4$). A precipitate is formed. Centrifuge and collect supernatant A. Heat the other tube at 37 °C for 15 min and add 3 mL of perchloric acid (25 g/L $HClO_4$). Centrifuge and collect supernatant B. The absorbance of supernatant B, measured at 260 nm with reference to supernatant A is not less than 0.15.

Sodium diethyldithiocarbamate. $C_5H_{10}NNaS_2,3H_2O$. (M_r 225.3). *1080000.* [20624-25-3].

White or almost white or colourless crystals, freely soluble in water, soluble in ethanol (96 per cent). The aqueous solution is colourless.

Sodium dihydrogen phosphate. *1080100.* [13472-35-0].

See *Sodium dihydrogen phosphate dihydrate (0194)*.

Sodium dihydrogen phosphate, anhydrous. NaH_2PO_4. (M_r 120.0). *1080200.* [7558-80-7].

White or almost white powder, hygroscopic.

Storage: in an airtight container.

Sodium dihydrogen phosphate monohydrate. NaH_2PO4,H_2O. (M_r 138.0). *1080300.* [10049-21-5].

White or almost white, slightly deliquescent crystals or granules, freely soluble in water, practically insoluble in ethanol (96 per cent).

Storage: in an airtight container.

Sodium dioctyl sulfosuccinate. $C_{20}H_{37}NaO_7S$. (M_r 444.6). *1170800.* [577-11-7]. Sodium 1,4-bis[(2-ethylhexyl)oxy]-1,4-dioxobutane-2-sulfonate. 1,4-Bis(2-ethylhexyl) sulfobutanedioate sodium salt.

White or almost white, waxy solid.

Sodium dithionite. $Na_2S_2O_4$. (M_r 174.1). *1080400.* [7775-14-6].

White or greyish-white, crystalline powder, oxidises in air, very soluble in water, slightly soluble in ethanol (96 per cent).

Storage: in an airtight container.

Sodium dodecyl sulfate. *1080500.* [151-21-3].

See *Sodium laurilsulfate (0098)*.

Content: minimum 99.0 per cent.

Sodium edetate. *1080600.* [6381-92-6].

See *Disodium edetate (0232)*.

Sodium fluoresceinate. $C_{20}H_{10}Na_2O_5$. (M_r 376.3). *1080700.* [518-47-8].

Schultz No. 880.

Colour Index No. 45350.

Fluorescein sodium. Disodium 2-(3-oxo-6-oxido-3H-xanthen-9-yl)benzoate.

Orange-red powder, freely soluble in water. Aqueous solutions display an intense yellowish-green fluorescence.

Sodium fluoride. *1080800.* [7681-49-4].

See *Sodium fluoride (0514)*.

Sodium formate. $CHNaO_2$. (M_r 68.0). *1122200.* [141-53-7]. Sodium methanoate.

White or almost white, crystalline powder or deliquescent granules, soluble in water and in glycerol, slightly soluble in ethanol (96 per cent).

mp: about 253 °C.

Sodium glucuronate. $C_6H_9NaO_7,H_2O$. (M_r 234.1). *1080900.* Sodium D-glucuronate monohydrate.

$[\alpha]_D^{20}$: about + 21.5, determined on a 20 g/L solution.

Sodium glycocholate. $C_{26}H_{42}NNaO_6,2H_2O$. (M_r 523.6). *1155500.* [207300-80-9]. Sodium [(3,7,12-trihydroxy-5-cholan-24-oyl)amino]acetate dihydrate. *N*-[(3,5,7,12)-3,7,12-Trihydroxy-24-oxocholan-24-yl]glycine monosodium salt dihydrate.

Content: minimum 97 per cent of $C_{26}H_{42}NNaO_6,2H_2O$.

Sodium heptanesulfonate. $C_7H_{15}NaO_3S$. (M_r 202.3). *1081000.* [22767-50-6].

White or almost white, crystalline mass, freely soluble in water, soluble in methanol.

Sodium heptanesulfonate monohydrate. $C_7H_{15}NaO_3S,H_2O$. (M_r 220.3). *1081100.*

Content: minimum 96 per cent (anhydrous substance).

White or almost white, crystalline powder, soluble in water, very slightly soluble in anhydrous ethanol.

Water (*2.5.12*): maximum 8 per cent, determined on 0.300 g.

Assay. Dissolve 0.150 g in 50 mL of *anhydrous acetic acid R*. Titrate with *0.1 M perchloric acid*, determining the end-point potentiometrically (*2.2.20*).

1 mL of *0.1 M perchloric acid* is equivalent to 20.22 mg of $C_7H_{15}NaO_3S$.

Sodium hexanesulfonate. $C_6H_{13}NaO_3S$. (M_r 188.2). *1081200.* [2832-45-3].

White or almost white powder, freely soluble in water.

Sodium hexanesulfonate monohydrate. $C_6H_{13}NaO_3S,H_2O$. (M_r 206.2). *1161500.* [207300-91-2].

White or almost white powder, soluble in water.

Sodium hexanesulfonate monohydrate for ion-pair chromatography. $C_6H_{13}NaO_3S,H_2O$. (M_r 206.2). *1182300.* [207300-91-2].

Content: minimum 99.0 per cent.

Sodium hydrogen carbonate. *1081300.* [144-55-8].

See *Sodium hydrogen carbonate (0195)*.

Sodium hydrogen carbonate solution. *1081301.*

A 42 g/L solution.

Sodium hydrogen sulfate. $NaHSO_4$. (M_r 120.1). *1131900.* [7681-38-1]. Sodium bisulfate.

Freely soluble in water, very soluble in boiling water. It decomposes in ethanol (96 per cent) into sodium sulfate and free sulfuric acid.

mp: about 315 °C.

Sodium hydrogensulfite. $NaHO_3S$. (M_r 104.1). *1115700.* [7631-90-5].

White or almost white, crystalline powder, freely soluble in water, sparingly soluble in ethanol (96 per cent).

On exposure to air, some sulfur dioxide is lost and the substance is gradually oxidated to sulfate.

Sodium hydroxide. *1081400.* [1310-73-2].

See *Sodium hydroxide (0677)*.

2 M Sodium hydroxide. *3009800.*

Dissolve 84 g of *sodium hydroxide R* in *carbon dioxide-free water R* and dilute to 1000.0 mL with the same solvent.

Sodium hydroxide solution. *1081401.*

Dissolve 20.0 g of *sodium hydroxide R* in *water R* and dilute to 100.0 mL with the same solvent. Verify the concentration by titration with *1 M hydrochloric acid*, using *methyl orange solution R* as indicator, and adjust if necessary to 200 g/L.

Sodium hydroxide solution, carbonate-free. *1081406.*

Dissolve *sodium hydroxide R* in *carbon dioxide-free water R* to give a concentration of 500 g/L and allow to stand. Decant the clear supernatant, taking precautions to avoid the introduction of carbon dioxide.

Sodium hydroxide solution, dilute. *1081402.*

Dissolve 8.5 g of *sodium hydroxide R* in *water R* and dilute to 100 mL with the same solvent.

Sodium hydroxide solution, methanolic. *1081403.*

Dissolve 40 mg of *sodium hydroxide R* in 50 mL of *water R*. Cool and add 50 mL of *methanol R*.

Sodium hydroxide solution, methanolic R1. *1081405.*

Dissolve 200 mg of *sodium hydroxide R* in 50 mL of *water R*. Cool and add 50 mL of *methanol R*.

Sodium hydroxide solution, strong. *1081404.*

Dissolve 42 g of *sodium hydroxide R* in *water R* and dilute to 100 mL with the same solvent.

Sodium 2-hydroxybutyrate. $C_4H_7NaO_3$. (M_r 126.1). *1158800.* [19054-57-0]. Sodium (2*RS*)-2-hydroxybutanoate.

Sodium hypobromite solution. *1081500.*

In a bath of iced water mix 20 mL of *strong sodium hydroxide solution R* and 500 mL of *water R*, add 5 mL of *bromine solution R* and stir gently until solution is complete. Prepare immediately before use.

Sodium hypochlorite solution, strong. *1081600.*

Content: 25 g/L to 30 g/L of active chlorine.

Yellowish liquid with an alkaline reaction.

Assay. Introduce into a flask, successively, 50 mL of *water R*, 1 g of *potassium iodide R* and 12.5 mL of *dilute acetic acid R*. Dilute 10.0 mL of the substance to be examined to 100.0 mL with *water R*. Introduce 10.0 mL of this solution into the flask and titrate with *0.1 M sodium thiosulfate*, using 1 mL of *starch solution R* as indicator.

1 mL of *0.1 M sodium thiosulfate* is equivalent to 3.546 mg of active chlorine.

Storage: protected from light.

Sodium hypophosphite. NaH_2PO_2,H_2O. (M_r 106.0). *1081700.* [10039-56-2]. Sodium phosphinate monohydrate.

White or almost white, crystalline powder or colourless crystals, hygroscopic, freely soluble in water, soluble in ethanol (96 per cent).

Storage: in an airtight container.

Sodium iodide. *1081800.* [7681-82-5].

See *Sodium iodide (0196)*.

Sodium laurilsulfate. *1081900.* [151-21-3].

See *Sodium laurilsulfate (0098)*.

Sodium lauryl sulfate. *1081900.* [151-21-3].

See *Sodium laurilsulfate R*.

Sodium laurylsulfonate for chromatography. $C_{12}H_{25}NaO_3S$. (M_r 272.4). *1132000.* [2386-53-0].

White or almost white powder or crystals, freely soluble in water.

Absorbance $A_{1\,cm}^{5\%}$ (*2.2.25*), determined in *water R*: about 0.05 at 210 nm; about 0.03 at 220 nm; about 0.02 at 230 nm; about 0.02 at 500 nm.

Sodium metabisulfite. *1082000.* [7681-57-4].

See *Sodium metabisulfite (0849)*.

Sodium methanesulfonate. CH_3SO_3Na. (M_r 118.1). *1082100.* [2386-57-4].

White or almost white, crystalline powder, hygroscopic.

Storage: in an airtight container.

Sodium molybdate. $Na_2MoO_4,2H_2O$. (M_r 242.0). *1082200.* [10102-40-6]. Disodium molybdate dihydrate.

White or almost white, crystalline powder or colourless crystals, freely soluble in water.

Sodium naphthoquinonesulfonate. $C_{10}H_5NaO_5S$. (M_r 260.2). *1082300.* [521-24-4]. Sodium 1,2-naphthoquinone-4-sulfonate.

Yellow or orange-yellow, crystalline powder, freely soluble in water, practically insoluble in ethanol (96 per cent).

Sodium nitrate. $NaNO_3$. (M_r 85.0). *1082400.* [7631-99-4].

White or almost white powder or granules or colourless, transparent crystals, deliquescent in moist air, freely soluble in water, slightly soluble in ethanol (96 per cent).

Storage: in an airtight container.

Sodium nitrite. $NaNO_2$. (M_r 69.0). *1082500.* [7632-00-0].

Content: minimum 97.0 per cent.

White or almost white, granular powder or a slightly yellow, crystalline powder, freely soluble in water.

Assay. Dissolve 0.100 g in 50 mL of *water R*. Add 50.0 mL of *0.02 M potassium permanganate* and 15 mL of *dilute sulfuric acid R*. Add 3 g of *potassium iodide R*. Titrate with *0.1 M sodium thiosulfate*, using 1.0 mL of *starch solution R* added towards the end of the titration as indicator.

1 mL of *0.02 M potassium permanganate* is equivalent to 3.450 mg of $NaNO_2$.

Sodium nitrite solution. *1082501.*

A 100 g/L solution. Prepare immediately before use.

Sodium nitroprusside. $Na_2[Fe(CN)_5(NO)],2H_2O$. (M_r 298.0). *1082600.* [13755-38-9]. Sodium pentacyano-nitrosylferrate(III) dihydrate.

Reddish-brown powder or crystals, freely soluble in water, slightly soluble in ethanol (96 per cent).

Sodium octanesulfonate. $C_8H_{17}NaO_3S$. (M_r 216.3). *1082700.* [5324-84-5].

Content: minimum 98.0 per cent.

White or almost white, crystalline powder or flakes, freely soluble in water, soluble in methanol.

Absorbance (*2.2.25*): maximum 0.10, determined at 200 nm and maximum 0.01, determined at 250 nm using a 54 g/L solution.

Sodium octanesulfonate monohydrate. $C_8H_{17}NaO_3S,H_2O$. (M_r 234.3). *1176700.* [207596-29-0].

White or almost white powder.

Sodium octyl sulfate. $C_8H_{17}NaO_4S$. (M_r 232.3). *1082800.* [142-31-4].

White or almost white, crystalline powder or flakes, freely soluble in water, soluble in methanol.

Sodium oxalate. $C_2Na_2O_4$. (M_r 134.0). *1082900.* [62-76-0].

White or almost white, crystalline powder, soluble in water, practically insoluble in ethanol (96 per cent).

Sodium pentanesulfonate. $C_5H_{11}NaO_3S$. (M_r 174.2). *1083000.* [22767-49-3].

White or almost white, crystalline solid, soluble in water.

Sodium pentanesulfonate monohydrate. $C_5H_{11}NaO_3S,H_2O$. (M_r 192.2). *1132100.* [207605-40-1].

White or almost white crystalline solid, soluble in water.

Sodium pentanesulfonate monohydrate R1. $C_5H_{11}NaO_3S,H_2O$. (M_r 192.2). *1172500.* [207605-40-1].

Content: minimum 99 per cent of $C_5H_{11}NaO_3S,H_2O$.

Sodium perchlorate. $NaClO_4,H_2O$. (M_r 140.5). *1083100.* [7791-07-3].

Content: minimum 99.0 per cent of $NaClO_4,H_2O$.

White or almost white, deliquescent crystals, very soluble in water.

Storage: in a well-closed container.

Sodium periodate. $NaIO_4$. (M_r 213.9). *1083200.* [7790-28-5]. Sodium metaperiodate.

Content: minimum 99.0 per cent.

White or almost white, crystalline powder or crystals, soluble in water and in mineral acids.

Sodium periodate solution. *1083201.*

Dissolve 1.07 g of *sodium periodate R* in *water R*, add 5 mL of *dilute sulfuric acid R* and dilute to 100.0 mL with *water R*. Use a freshly prepared solution.

Sodium phosphite pentahydrate. $Na_2HPO_3,5H_2O$. (M_r 216.0). *1132200.* [13517-23-2].

White or almost white, crystalline powder, hygroscopic, freely soluble in water.

Storage: in an airtight container.

Sodium picrate solution, alkaline. *1083300.*

Mix 20 mL of *picric acid solution R* and 10 mL of a 50 g/L solution of *sodium hydroxide R* and dilute to 100 mL with *water R*.

Storage: use within 2 days.

Sodium potassium tartrate. $C_4H_4KNaO_6,4H_2O$. (M_r 282.2). *1083500.* [6381-59-5].

Colourless, prismatic crystals, very soluble in water.

Sodium pyrophosphate. $Na_4P_2O_7,10H_2O$. (M_r 446.1). *1083600.* [13472-36-1]. Tetrasodium diphosphate decahydrate.

Colourless, slightly efflorescent crystals, freely soluble in water.

Sodium rhodizonate. $C_6Na_2O_6$. (M_r 214.0). *1122300.* [523-21-7]. [(3,4,5,6-Tetraoxocyclohex-1-en-1,2-ylene)dioxy]disodium.

Violet crystals, soluble in water with an orange-yellow colour.

Solutions are unstable and must be prepared on the day of use.

Sodium salicylate. *1083700.* [54-21-7].

See *Sodium salicylate (0413)*.

Sodium sulfate, anhydrous. *1083800.* [7757-82-6].

Ignite at 600 °C to 700 °C anhydrous sodium sulfate complying with the requirements prescribed in the monograph on *Anhydrous sodium sulfate (0099)*.

Loss on drying (*2.2.32*): maximum 0.5 per cent, determined by drying in an oven at 130 °C.

Sodium sulfate, anhydrous R1. *1083801.*

Complies with the requirements prescribed for *anhydrous sodium sulfate R* with the following maximum contents.

Cl: 20 ppm.

Pb: 10 ppm.

As: 3 ppm.

Ca: 50 ppm.

Fe: 10 ppm.

Mg: 10 ppm.

Sodium sulfate decahydrate. $Na_2SO_4,10H_2O$. (M_r 322.2). *1132300.* [7727-73-3].

See *Sodium sulfate decahydrate (0100)*.

Sodium sulfide. $Na_2S,9H_2O$. (M_r 240.2). *1083900.* [1313-84-4]. Disodium sulfide nonahydrate.

Colourless, rapidly yellowing crystals, deliquescent, very soluble in water.

Storage: in an airtight container.

Sodium sulfide solution. *1083901.*

Dissolve 12 g of *sodium sulfide R* with heating in 45 mL of a mixture of 10 volumes of *water R* and 29 volumes of *glycerol (85 per cent) R*, allow to cool and dilute to 100 mL with the same mixture of solvents.

The solution should be colourless.

Sodium sulfide solution R1. *1083902.*

Prepare by one of the following methods.

– Dissolve 5 g of *sodium sulfide R* in a mixture of 10 mL of *water R* and 30 mL of *glycerol R*.

– Dissolve 5 g of *sodium hydroxide R* in a mixture of 30 mL of *water R* and 90 mL of *glycerol R*. Divide the solution into 2 equal portions. Saturate 1 portion with *hydrogen sulfide R*, with cooling. Mix the 2 portions.

Storage: in a well-filled container, protected from light; use within 3 months.

Sodium sulfite. *1084000.* [10102-15-5].

See *Sodium sulfite heptahydrate (0776).*

Sodium sulfite, anhydrous. *1084100.* [7757-83-7].

See *Anhydrous sodium sulfite (0775).*

Sodium tartrate. $C_4H_4Na_2O_6,2H_2O$. (M_r 230.1). *1084200.* [6106-24-7]. Disodium (2*R*,3*R*)-2,3-dihydroxybutanedioate dihydrate.

White or almost white crystals or granules, very soluble in water, practically insoluble in ethanol (96 per cent).

Sodium taurodeoxycholate. $C_{26}H_{44}NNaO_6S,H_2O$. (M_r 539.7). *1155600.* [110026-03-4]. Sodium 2-[(3,12-dihydroxy-5-cholan-24-oyl)amino]ethanesulfonate monohydrate. 2-[[(3,5,12)-3,12-Dihydroxy-24-oxocholan-24-yl]amino]ethanesulfonic acid monosodium salt monohydrate.

Content: minimum 94 per cent of $C_{26}H_{44}NNaO_6S,H_2O$.

Sodium tetrahydroborate. $NaBH_4$. (M_r 37.8). *1146900.* [16940-66-2]. Sodium borohydride.

Colourless, hygroscopic crystals, freely soluble in water, soluble in anhydrous ethanol, decomposing at higher temperature or in the presence of acids or certain metal salts forming borax and hydrogen.

Storage: in an airtight container.

Sodium tetrahydroborate reducing solution. *1146901.*

Introduce about 100 mL of *water R* into a 500 mL volumetric flask containing a stirring bar. Add 5.0 g of *sodium hydroxide R* in pellets and 2.5 g of *sodium tetrahydroborate R*. Stir until complete dissolution, dilute to 500.0 mL with *water R* and mix. Prepare immediately before use.

Sodium tetraphenylborate. $NaB(C_6H_5)_4$. (M_r 342.2). *1084400.* [143-66-8].

White or slightly yellowish, bulky powder, freely soluble in water and in acetone.

Sodium tetraphenylborate solution. *1084401.*

Filter before use if necessary.

A 10 g/L solution.

Storage: use within 1 week.

Sodium thioglycollate. $C_2H_3NaO_2S$. (M_r 114.1). *1084500.* [367-51-1]. Sodium mercaptoacetate.

White or almost white, granular powder or crystals, hygroscopic, freely soluble in water and in methanol, slightly soluble in ethanol (96 per cent).

Storage: in an airtight container.

Sodium thiosulfate. *1084600.* [10102-17-7].

See *Sodium thiosulfate (0414).*

Sodium thiosulfate, anhydrous. $Na_2S_2O_3$. (M_r 158.1). *1180700.* [7772-98-7]. Disodium thiosulfate.

Content: minimum 98.0 per cent.

Sodium tungstate. $Na_2WO_4,2H_2O$. (M_r 329.9). *1084700.* [10213-10-2]. Disodium tungstate dihydrate.

White or almost white, crystalline powder or colourless crystals, freely soluble in water forming a clear solution, practically insoluble in ethanol (96 per cent).

Sorbitol. *1084800.* [50-70-4].

See *Sorbitol (0435).*

Squalane. $C_{30}H_{62}$. (M_r 422.8). *1084900.* [111-01-3]. 2,6,10,15,19,23-Hexamethyltetracosane.

Colourless, oily liquid, freely soluble in fatty oils, slightly soluble in acetone, in ethanol (96 per cent), in glacial acetic acid and in methanol.

d_{20}^{20}: 0.811 to 0.813.

n_D^{20}: 1.451 to 1.453.

Stannous chloride. $SnCl_2,2H_2O$. (M_r 225.6). *1085000.* [10025-69-1]. Tin dichloride dihydrate.

Content: minimum 97.0 per cent of $SnCl_2,2H_2O$.

Colourless crystals, very soluble in water, freely soluble in ethanol (96 per cent), in glacial acetic acid and in dilute and concentrated hydrochloric acid.

Assay. Dissolve 0.500 g in 15 mL of *hydrochloric acid R* in a ground-glass-stoppered flask. Add 10 mL of *water R* and 5 mL of *chloroform R*. Titrate rapidly with *0.05 M potassium iodate* until the chloroform layer is colourless.

1 mL of *0.05 M potassium iodate* is equivalent to 22.56 mg of $SnCl_2,2H_2O$.

Stannous chloride solution. *1085001.*

Heat 20 g of *tin R* with 85 mL of *hydrochloric acid R* until no more hydrogen is released. Allow to cool.

Storage: over an excess of *tin R*, protected from air.

Stannous chloride solution R1. *1085002.*

Immediately before use, dilute 1 volume of *stannous chloride solution R* with 10 volumes of *dilute hydrochloric acid R*.

Stannous chloride solution R2. *1085003.*

To 8 g of *stannous chloride R* add 100 mL of a 20 per cent *V/V* solution of *hydrochloric acid R*. Shake until dissolved, heating, if necessary, on a water-bath at 50 °C. Pass a current of *nitrogen R* for 15 min. Prepare immediately before use.

Stanolone. $C_{19}H_{30}O_2$. (M_r 290.4). *1154400.* [521-18-6]. 17β-Hydroxy-5α-androstan-3-one.

White or almost white powder.

mp: about 180 °C.

Standard solution for the micro determination of water. *1147300.*

Commercially available standard solution for the coulometric titration of water, containing a certified content of water in a suitable solvent.

***Staphylococcus aureus* strain V8 protease, type XVII-B.** *1115800.* [66676-43-5].

Microbial extracellular proteolytic enzyme. A lyophilised powder containing 500 units to 1000 units per milligram of solid.

Starch, soluble. *1085100.* [9005-84-9].

White or almost white powder.

Prepare a 20 g/L solution in hot *water R*. The solution is at most slightly opalescent and remains fluid on cooling.

Starch iodate paper. *1085101.*

Immerse strips of filter paper in 100 mL of *iodide-free starch solution R* containing 0.1 g of *potassium iodate R*. Drain and allow to dry protected from light.

Starch iodide paper. *1085106.*

Immerse strips of filter paper in 100 mL of *starch solution R* containing 0.5 g of *potassium iodide R*. Drain and allow to dry protected from light.

Test for sensitivity. Mix 0.05 mL of *0.1 M sodium nitrite* with 4 mL of *hydrochloric acid R* and dilute to 100 mL with *water R*. Apply one drop of the solution to starch iodide paper; a blue spot appears.

Starch solution. *1085103.*

Triturate 1.0 g of *soluble starch R* with 5 mL of *water R* and whilst stirring pour the mixture into 100 mL of boiling *water R* containing 10 mg of *mercuric iodide R*.

Carry out the test for sensitivity each time the reagent is used.

Test for sensitivity. To a mixture of 1 mL of the starch solution and 20 mL of *water R*, add about 50 mg of *potassium iodide R* and 0.05 mL of *iodine solution R1*. The solution is blue.

Starch solution, iodide-free. *1085104.*

Prepare the solution as prescribed for *starch solution R* omitting the mercuric iodide. Prepare immediately before use.

Starch solution R1. *1085105.*

Mix 1 g of *soluble starch R* and a small amount of cold *water R*. Add this mixture, while stirring, to 200 mL of boiling *water R*. Add 0.25 g of *salicylic acid R* and boil for 3 min. Immediately remove from the heat and cool.

Storage: long storage is required, the solution shall be stored at 4 °C to 10 °C. A fresh starch solution shall be prepared when the end-point of the titration from blue to colourless fails to be sharp. If stored under refrigeration, the starch solution is stable for about 2 to 3 weeks.

Test for sensitivity. A mixture of 2 mL of *starch solution R1*, 20 mL of *water R*, about 50 mg of *potassium iodide R* and 0.05 mL of *iodine solution R1* is blue.

Starch solution R2. *1085107.*

Triturate 1.0 g of *soluble starch R* with 5 mL of *water R* and whilst stirring pour the mixture into 100 mL of boiling *water R*. Use a freshly prepared solution.

Test for sensitivity. To a mixture of 1 mL of the starch solution and 20 mL of *water R*, add about 50 mg of *potassium iodide R* and 0.05 mL of *iodine solution R1*. The solution is blue.

Stavudine. *1187000.* [3056-17-5].

See *Stavudine (2130)*.

Stearic acid. $C_{18}H_{36}O_2$. (M_r 284.5). *1085200.* [57-11-4]. Octadecanoic acid.

White or almost white powder or flakes, greasy to the touch, practically insoluble in water, soluble in hot ethanol (96 per cent).

mp: about 70 °C.

Stearic acid used in the assay of total fatty acids in Saw palmetto fruit (1848) complies with the following additional test.

Assay. Gas chromatography (*2.2.28*) as prescribed in the monograph *Saw palmetto fruit (1848)*.

Content: minimum 98 per cent, calculated by the normalisation procedure.

Stearyl alcohol. $C_{18}H_{38}O$. (M_r 270.5). *1156400.* [112-92-5]. Octadecan-1-ol.

mp: about 60 °C.

Content: minimum 95 per cent.

Stigmasterol. $C_{29}H_{48}O$. (M_r 412.7). *1141400.* [83-48-7]. (22*E*)-Stigmasta-5,22-dien-3β-ol. (22*E*)-24-Ethylcholesta-5,22-dien-3β-ol.

White or almost white powder, insoluble in water.

mp: about 170 °C.

$[\alpha]_D^{22}$: about – 51, determined with a 20 g/L solution in *chloroform R*.

Streptomycin sulfate. *1085300.* [3810-74-0].

See *Streptomycin sulfate (0053)*.

Strongly acidic ion-exchange resin. *1085400.*

See *ion-exchange resin, strongly acidic R*.

Strontium carbonate. $SrCO_3$. (M_r 147.6). *1122700.* [1633-05-2].

White or almost white, crystalline powder.

Content: minimum 99.5 per cent.

Strontium chloride hexahydrate. $SrCl_2,6H_2O$. (M_r 266.6). *1167000.* [10025-70-4].

White or almost white crystals, very soluble in water.

mp: about 115 °C (loss of water) and 872 °C.

Strontium selective extraction resin. *1167100.*

Commercially available resin prepared by loading a suspension of 4,4′(5′)-di-*tert*-butylcyclohexano-18-crown-6 (crown ether) in octanol onto an inert chromatographic support. The bed density of this resin is approximately 0.35 g/mL.

Strontium-85 spiking solution. *1166800.*

Dilute *strontium-85 standard solution R* to a radioactivity concentration of approximately 10 kBq/mL with a 0.27 g/L solution of *strontium chloride hexahydrate R* in a 1.03 g/L solution of *hydrochloric acid R*.

Strontium-85 standard solution. *1166900.*

A solution of strontium-85 in the form of Sr^{2+} ions in a 51.5 g/L solution of *hydrochloric acid R*.

Styrene. C_8H_8. (M_r 104.2). *1151700.* [100-42-5]. Ethenylbenzene.

bp: about 145 °C.

Colourless, oily liquid, very slightly soluble in water.

Styrene-divinylbenzene copolymer. *1085500.*

Porous, rigid, cross-linked polymer beads. Several grades are available with different sizes of beads. The size range of the beads is specified after the name of the reagent in the tests where it is used.

Succinic acid. $C_4H_6O_4$. (M_r 118.1). *1085600.* [110-15-6]. Butanedioic acid.

White or almost white, crystalline powder or colourless crystals, soluble in water and in ethanol (96 per cent).

mp: 184 °C to 187 °C.

Sucrose. *1085700.* [57-50-1].

See *Sucrose (0204)*.

Sudan orange. $C_{16}H_{12}N_2O$. (M_r 248.3). *1110700.* [842-07-9].

Colour Index No. 12055.
1-(Phenylazo)naphthalen-2-ol. Sudan I.

Orange-red powder, practically insoluble in water, soluble in methylene chloride.

mp: about 131 °C.

Sudan red G. $C_{17}H_{14}N_2O_2$. (M_r 278.3). *1085800.*

Schultz No. 149.

Colour Index No. 12150.
Solvent Red 1. 1-[(2-Methoxyphenyl)azo]naphtalen-2-ol.

Reddish-brown powder, practically insoluble in water.

Chromatography. Thin-layer chromatography (*2.2.27*) using *silica gel G R* as the coating substance: apply 10 µL of a 0.1 g/L solution in *methylene chloride R* and develop over a path of 10 cm with the same solvent; the chromatogram shows only one principal spot.

Sulfanilamide. $C_6H_8N_2O_2S$. (M_r 172.2). *1086100.* [63-74-1]. 4-Aminobenzenesulfonamide.

White or almost white powder, slightly soluble in water, freely soluble in boiling water, in acetone, in dilute acids and in solutions of the alkali hydroxides, sparingly soluble in ethanol (96 per cent) and in light petroleum.

mp: about 165 °C.

Sulfathiazole. $C_9H_9N_3O_2S_2$. (M_r 255.3). *1086300.* [72-14-0]. 4-Amino-*N*-(thiazol-2-yl)benzenesulfonamide.

White or yellowish-white powder or crystals, very slightly soluble in water, soluble in acetone, slightly soluble in ethanol (96 per cent). It dissolves in dilute mineral acids and in solutions of alkali hydroxides and carbonates.

mp: about 200 °C.

Sulfamic acid. H_3NO_3S. (M_r 97.1). *1085900.* [5329-14-6].

White or almost white crystalline powder or crystals, freely soluble in water, sparingly soluble in acetone, in ethanol (96 per cent) and in methanol.

mp: about 205 °C, with decomposition.

Sulfan blue. $C_{27}H_{31}N_2NaO_6S_2$. (M_r 566.6). *1086000.* [129-17-9].

Schultz No. 769.

Colour Index No. 42045.
Acid Blue 1. Patent Blue VF. Disulfine blue. Blue VS. Sodium [[[(4-diethylamino)phenyl](2,4-disulfonatophenyl)-methylene]cyclohexa-2,5-dien-1-ylidene]diethylammonium.

Violet powder, soluble in water. Dilute solutions are blue and turn yellow on the addition of concentrated hydrochloric acid.

Sulfanilic acid. $C_6H_7NO_3S$. (M_r 173.2). *1086200.* [121-57-3]. 4-Aminobenzenesulfonic acid.

Colourless crystals, sparingly soluble in water, practically insoluble in ethanol (96 per cent).

Sulfanilic acid solution. *1086203.*

Dissolve 0.33 g of *sulfanilic acid R* in 75 mL of *water R* heating gently if necessary and dilute to 100 mL with *glacial acetic acid R*.

Sulfanilic acid solution R1. *1086201.*

Dissolve 0.5 g of *sulfanilic acid R* in a mixture of 75 mL of *dilute acetic acid R* and 75 mL of *water R*.

Sulfanilic acid solution, diazotised. *1086202.*

Dissolve, with warming, 0.9 g of *sulfanilic acid R* in 9 mL of *hydrochloric acid R*, and dilute to 100 mL with *water R*. Cool 10 mL of this solution in iced water and add 10 mL of an ice-cold 45 g/L solution of *sodium nitrite R*. Allow to stand at 0 °C for 15 min (if stored at this temperature, the solution is stable for 3 days) and immediately before use add 20 mL of a 100 g/L solution of *sodium carbonate R*.

Sulfomolybdic reagent R2. *1086400.*

Dissolve about 50 mg of *ammonium molybdate R* in 10 mL of *sulfuric acid R*.

Sulfomolybdic reagent R3. *1086500.*

Dissolve with heating 2.5 g of *ammonium molybdate R* in 20 mL of *water R*. Dilute 28 mL of *sulfuric acid R* in 50 mL of *water R*, then cool. Mix the two solutions and dilute to 100 mL with *water R*.

Storage: in a polyethylene container.

Sulfosalicylic acid. $C_7H_6O_6S,2H_2O$. (M_r 254.2). *1086600.* [5965-83-3]. 2-Hydroxy-5-sulfobenzoic acid.

White or almost white, crystalline powder or crystals, very soluble in water and in ethanol (96 per cent).

mp: about 109 °C.

Sulfur. *1110800.* [7704-34-9].

See *Sulfur for external use (0953)*.

Sulfur dioxide. SO_2. (M_r 64.1). *1086700.* [7446-09-5]. Sulfurous anhydride.

A colourless gas. When compressed it is a colourless liquid.

Sulfur dioxide R1. SO_2. (M_r 64.1). *1110900.* [7446-09-5].

Content: minimum 99.9 per cent *V/V*.

Sulfuric acid. H_2SO_4. (M_r 98.1). *1086800.* [7664-93-9].

Content: 95.0 per cent *m/m* to 97.0 per cent *m/m*.

Colourless, caustic liquid with an oily consistency, highly hygroscopic, miscible with water and with ethanol (96 per cent) producing intense heat.

d_{20}^{20}: 1.834 to 1.837.

A 10 g/L solution is strongly acid and gives the reactions of sulfates (*2.3.1*).

Appearance. It is clear (*2.2.1*) and colourless (*2.2.2, Method II*).

Oxidisable substances. Pour 20 g cautiously, with cooling, into 40 mL of *water R*. Add 0.5 mL of *0.002 M potassium permanganate*. The violet colour persists for at least 5 min.

Chlorides: maximum 0.5 ppm.

Pour 10 g, carefully and while cooling, into 10 mL of *water R* and after cooling dilute to 20 mL with the same solvent. Add 0.5 mL of *silver nitrate solution R2*. Allow to stand for 2 min protected from bright light. The solution is not more opalescent than a standard prepared at the same time using a mixture of 1 mL of *chloride standard solution (5 ppm Cl) R*, 19 mL of *water R* and 0.5 mL of *silver nitrate solution R2*.

Nitrates: maximum 0.5 ppm.

Pour 50 g or 27.2 mL, carefully and while cooling, into 15 mL of *water R*. Add 0.2 mL of a freshly prepared 50 g/L solution of *brucine R* in *glacial acetic acid R*. After 5 min any colour is less intense than that of a reference mixture prepared in the same manner and containing 12.5 mL of *water R*, 50 g of *nitrogen-free sulfuric acid R*, 2.5 mL of *nitrate standard solution (10 ppm NO_3) R* and 0.2 mL of a 50 g/L solution of *brucine R* in *glacial acetic acid R*.

Ammonium: maximum 2 ppm.

Pour 2.5 g, carefully and while cooling, into *water R* and dilute to 20 mL with the same solvent. Cool, and add dropwise 10 mL of a 200 g/L solution of *sodium hydroxide R*, followed by 1 mL of *alkaline potassium tetraiodomercurate solution R*. The colour of the solution is less intense than that of a mixture of

5 mL of *ammonium standard solution (1 ppm NH_4) R*, 15 mL of *water R*, 10 mL of a 200 g/L solution of *sodium hydroxide R* and 1 mL of *alkaline potassium tetraiodomercurate solution R*.

Arsenic (*2.4.2, Method A*): maximum 0.02 ppm.

To 50 g add 3 mL of *nitric acid R* and evaporate carefully until the volume is reduced to about 10 mL. Cool, add to the residue 20 mL of *water R* and concentrate to 5 mL. Prepare the standard using 1.0 mL of *arsenic standard solution (1 ppm As) R*.

Iron (*2.4.9*): maximum 1 ppm.

Dissolve the residue on ignition with slight heating in 1 mL of *dilute hydrochloric acid R* and dilute to 50.0 mL with *water R*. Dilute 5 mL of this solution to 10 mL with *water R*.

Heavy metals (*2.4.8*): maximum 2 ppm.

Dilute 10 mL of the solution obtained in the test for iron to 20 mL with *water R*. 12 mL of the solution complies with test A. Prepare the reference solution using *lead standard solution (2 ppm Pb) R*.

Residue on ignition: maximum 0.001 per cent, determined on 100 g by evaporating cautiously in a small crucible over a naked flame and igniting the residue to redness.

Assay. Weigh accurately a ground-glass-stoppered flask containing 30 mL of *water R*, introduce 0.8 mL of the sulfuric acid, cool and weigh again. Titrate with *1 M sodium hydroxide*, using 0.1 mL of *methyl red solution R* as indicator.

1 mL of *1 M sodium hydroxide* is equivalent to 49.04 mg of H_2SO_4.

Storage: in a ground-glass-stoppered container made of glass or other inert material.

Sulfuric acid, alcoholic, 2.5 M. *1086801.*

Carefully and with constant cooling, stir 14 mL of *sulfuric acid R* into 60 mL of *anhydrous ethanol R*. Allow to cool and dilute to 100 mL with *anhydrous ethanol R*. Prepare immediately before use.

Sulfuric acid, alcoholic, 0.25 M. *1086802.*

Dilute 10 mL of *2.5 M alcoholic sulfuric acid R* to 100 mL with *anhydrous ethanol R*. Prepare immediately before use.

Sulfuric acid, alcoholic solution of. *1086803.*

Carefully and with constant cooling, stir 20 mL of *sulfuric acid R* into 60 mL of *ethanol (96 per cent) R*. Allow to cool and dilute to 100 mL with *ethanol (96 per cent) R*. Prepare immediately before use.

Sulfuric acid, dilute. *1086804.*

Contains 98 g/L of H_2SO_4.

Add 5.5 mL of *sulfuric acid R* to 60 mL of *water R*, allow to cool and dilute to 100 mL with the same solvent.

Assay. Into a ground-glass-stoppered flask containing 30 mL of *water R*, introduce 10.0 mL of the dilute sulfuric acid. Titrate with *1 M sodium hydroxide*, using 0.1 mL of *methyl red solution R* as indicator.

1 mL of *1 M sodium hydroxide* is equivalent to 49.04 mg of H_2SO_4.

Sulfuric acid-formaldehyde reagent. *1086805.*

Mix 2 mL of *formaldehyde solution R* with 100 mL of *sulfuric acid R*.

Sulfuric acid, heavy metal-free. *1086807.*

Complies with the requirements prescribed for *sulfuric acid R* with the following maximum contents of heavy metals.

As: 0.005 ppm.

Cd: 0.002 ppm.

Cu: 0.001 ppm.

Fe: 0.05 ppm.

Hg: 0.005 ppm.

Ni: 0.002 ppm.

Pb: 0.001 ppm.

Zn: 0.005 ppm.

Sulfuric acid, nitrogen-free. *1086806.*

Complies with the requirements prescribed for *sulfuric acid R* with the following additional test.

Nitrates. To 5 mL of *water R* add carefully 45 mL of the sulfuric acid, allow to cool to 40 °C and add 8 mg of *diphenylbenzidine R*. The solution is faint pink or very pale blue.

Sulfuric acid, nitrogen-free R1. *1086808.*

Complies with the requirements prescribed for *nitrogen-free sulfuric acid R*.

Content: 95.0 per cent *m/m* to 95.5 per cent *m/m*.

Sunflower oil. *1086900.*

See *Sunflower oil, refined (1371)*.

Swertiamarin. $C_{16}H_{22}O_{10}$. (M_r 374.3). *1163600.* [17388-39-5]. Swertiamaroside. (4*R*,5*R*,6*S*)-5-Ethenyl-6-(β-D-glucopyranosyloxy)-4a-hydroxy-4,4a,5,6-tetrahydro-1*H*,3*H*-pyrano[3,4-*c*]pyran-1-one.

Tagatose. $C_6H_{12}O_6$. (M_r 180.16). *1111000.* [87-81-0]. D-*lyxo*-Hexulose.

White or almost white powder.

$[\alpha]_D^{20}$: – 2.3 determined on a 21.9 g/L solution.

mp: 134 °C to 135 °C.

Talc. *1087000.* [14807-96-6].

See *Talc (0438)*.

Tannic acid. *1087100.* [1401-55-4].

Yellowish or light-brown, glistening scales or amorphous powder, very soluble in water, freely soluble in ethanol (96 per cent), soluble in acetone.

Storage: protected from light.

Tartaric acid. *1087200.* [87-69-4].

See *Tartaric acid (0460)*.

Taxifolin. $C_{15}H_{12}O_7$. (M_r 304.3). *1151800.* [480-18-2]. (2*R*,3*R*)-2-(3,4-Dihydroxyphenyl)-3,5,7-trihydroxy-2,3-dihydro-4*H*-1-benzopyran-4-one.

White or almost white powder, slightly soluble in anhydrous ethanol.

Absorbance (*2.2.25*). A solution in *anhydrous ethanol R* shows an absorption maximum at 290 nm.

Tecnazene. $C_6HCl_4NO_2$. (M_r 260.9). *1132400.* [117-18-0].

bp: about 304 °C.

mp: 99 °C to 100 °C.

A suitable certified reference solution (10 ng/μL in cyclohexane) may be used.

α-Terpinene. $C_{10}H_{16}$. (M_r 136.2). *1140300.* [99-86-5]. 1-Isopropyl-4-methylcyclohexa-1,3-diene.

Clear, almost colourless liquid.

d_4^{20}: about 0.837.

n_D^{20}: about 1.478.

bp: about 174 °C.

α-Terpinene used in gas chromatography complies with the following additional test.

Assay. Gas chromatography (*2.2.28*) as prescribed in the monograph *Tea tree oil (1837)*.

Content: minimum 90 per cent, calculated by the normalisation procedure.

γ-Terpinene. $C_{10}H_{16}$. (M_r 136.2). *1115900.* [99-85-4]. 1-Isopropyl-4-methylcyclohexa-1,4-diene.

Oily liquid.

γ-Terpinene used in gas chromatography complies with the following additional test.

Assay. Gas chromatography (*2.2.28*) as prescribed in the monograph *Peppermint oil (0405)*.

Test solution. The substance to be examined.

Content: minimum 93.0 per cent, calculated by the normalisation procedure.

Terpinen-4-ol. $C_{10}H_{18}O$. (M_r 154.2). *1116000.* [562-74-3]. 4-Methyl-1-(1-methylethyl)cyclohex-3-en-1-ol. *p*-Menth-1-en-4-ol.

Oily, colourless liquid.

Terpinen-4-ol used in gas chromatography complies with the following additional test.

Assay. Gas chromatography (*2.2.28*) as prescribed in the monograph *Lavender oil (1338)*.

Test solution. The substance to be examined.

Content: minimum 90.0 per cent, calculated by the normalisation procedure.

α-Terpineol. $C_{10}H_{18}O$. (M_r 154.2). *1087300.* [98-55-5]. (*RS*)-2-(4-Methylcyclohex-3-enyl)-2-propanol.

Colourless crystals, practically insoluble in water, soluble in ethanol (96 per cent).

d_{20}^{20}: about 0.935.

n_D^{20}: about 1.483.

$[\alpha]_D^{20}$: about 92.5.

mp: about 35 °C.

It may contain 1 to 3 per cent of β-terpineol.

α-Terpineol used in gas chromatography complies with the following test.

Assay. Gas chromatography (*2.2.28*) as prescribed in the monograph *Anise oil (0804)*.

Test solution. A 100 g/L solution in *hexane R*.

Content: minimum 97.0 per cent, calculated by the normalisation procedure.

Terpinolene. $C_{10}H_{16}$. (M_r 136.2). *1140400.* [586-62-9]. *p*-Mentha-1,4(8)-diene. 4-Isopropylidene-1-methylcyclohexene.

Clear, almost colourless liquid.

d_4^{20}: about 0.863.

n_D^{20}: about 1.488.

bp: about 184 °C.

Terpinolene used in gas chromatography complies with the following additional test.

Assay. Gas chromatography (*2.2.28*) as prescribed in the monograph *Tea tree oil (1837)*.

Content: minimum 90 per cent, calculated by the normalisation procedure.

Testosterone. *1116100.* [58-22-0].

See *Testosterone (1373)*.

Testosterone propionate. *1087400.* [57-85-2].

See *Testosterone propionate (0297)*.

1,2,3,4-Tetra-*O*-acetyl-β-D-glucopyranose. $C_{14}H_{20}O_{10}$. (M_r 348.3). *1172600.* [13100-46-4].

White or almost white powder, soluble in water with gentle heating.

$[\alpha]_D^{20}$: + 11, determined on a 6 g/L solution in *chloroform R*.

mp: 126 °C to 128 °C.

1,3,4,6-Tetra-*O*-acetyl-β-D-mannopyranose. $C_{14}H_{20}O_{10}$. (M_r 348.3). *1174100.* [18968-05-3].

Colourless or white powder or crystals.

mp: 160 °C to 161 °C.

$[\alpha]_D^{20}$: − 68, determined on a 7 g/L solution in *methylene chloride R*.

Tetrabutylammonium bromide. $C_{16}H_{36}BrN$. (M_r 322.4). *1087500.* [1643-19-2].

White or almost white crystals.

mp: 102 °C to 104 °C.

Tetrabutylammonium dihydrogen phosphate. $C_{16}H_{38}NO_4P$. (M_r 339.5). *1087600.* [5574-97-0].

White or almost white powder, hygroscopic.

pH (*2.2.3*): about 7.5 for a 170 g/L solution.

Absorbance (*2.2.25*): about 0.10 determined at 210 nm using a 170 g/L solution.

Storage: in an airtight container.

Tetrabutylammonium hydrogen sulfate. $C_{16}H_{37}NO_4S$. (M_r 339.5). *1087700.* [32503-27-8].

Crystalline powder or colourless crystals, freely soluble in water and in methanol.

mp: 169 °C to 173 °C.

Absorbance (*2.2.25*): maximum 0.05, determined between 240 nm and 300 nm using a 50 g/L solution.

Tetrabutylammonium hydrogen sulfate R1. *1087701.*

Complies with the requirements prescribed for *tetrabutylammonium hydrogen sulfate R* with the following additional requirement.

Absorbance (*2.2.25*): maximum 0.02, determined between 215 nm and 300 nm using a 50 g/L solution.

Tetrabutylammonium hydroxide. $C_{16}H_{37}NO,30H_2O$. (M_r 800). *1087800.* [2052-49-5].

Content: minimum 98.0 per cent of $C_{16}H_{37}NO,30H_2O$.

White or almost white crystals, soluble in water.

Assay. Dissolve 1.000 g in 100 mL of *water R*. Titrate immediately with *0.1 M hydrochloric acid* determining the end-point potentiometrically (*2.2.20*). Carry out a blank titration.

1 mL of *0.1 M hydrochloric acid* is equivalent to 80.0 mg $C_{16}H_{37}NO,30H_2O$.

Tetrabutylammonium hydroxide solution (104 g/L). *1087801.*

A solution containing 104 g/L of $C_{16}H_{37}NO$ (M_r 259.5), prepared by dilution of a suitable reagent grade.

Tetrabutylammonium hydroxide solution (400 g/L). *1087802.*

A solution containing 400 g/L of $C_{16}H_{37}NO$ (M_r 259.5) of a suitable grade.

Tetrabutylammonium iodide. $C_{16}H_{36}IN$. (M_r 369.4). *1087900.* [311-28-4].

Content: minimum 98.0 per cent.

White or slightly coloured, crystalline powder or crystals, soluble in ethanol (96 per cent).

Sulfated ash (*2.4.14*): maximum 0.02 per cent.

Assay. Dissolve 1.200 g in 30 mL of *water R*. Add 50.0 mL of *0.1 M silver nitrate* and 5 mL of *dilute nitric acid R*. Titrate the excess of silver nitrate with *0.1 M ammonium thiocyanate*, using 2 mL of *ferric ammonium sulfate solution R2* as indicator.

1 mL of *0.1 M silver nitrate* is equivalent to 36.94 mg of $C_{16}H_{36}IN$.

Tetrachloroethane. $C_2H_2Cl_4$. (M_r 167.9). *1088000.* [79-34-5]. 1,1,2,2-Tetrachloroethane.

Clear, colourless liquid, slightly soluble in water, miscible with ethanol (96 per cent).

d_{20}^{20}: about 1.59.

n_D^{20}: about 1.495.

Distillation range (*2.2.11*). Not less than 95 per cent distils between 145 °C and 147 °C.

Tetrachlorvinphos. $C_{10}H_9Cl_4O_4P$. (M_r 366.0). *1132500.* [22248-79-9].

mp: about 95 °C.

A suitable certified reference solution (10 ng/µL in iso-octane) may be used.

Tetracos-15-enoic acid methyl ester. $C_{25}H_{48}O_2$. (M_r 380.7). *1144800.* [2733-88-2]. 15-Tetracosaenoic acid methyl ester. Methyl tetracos-15-enoate. Nervonic acid methyl ester.

Content: minimum 99.0 per cent, determined by gas chromatography.

Liquid.

Tetracycline hydrochloride. *1147000.*

See *Tetracycline hydrochloride (0210)*.

Tetradecane. $C_{14}H_{30}$. (M_r 198.4). *1088200.* [629-59-4]. *n*-Tetradecane.

Content: minimum 99.5 per cent *m/m*.

A colourless liquid.

d_{20}^{20}: about 0.76.

n_D^{20}: about 1.429.

bp: about 252 °C.

mp: about – 5 °C.

Tetradecylammonium bromide. $C_{40}H_{84}BrN$. (M_r 659). *1088300.* [14937-42-9]. Tetrakis(decyl)ammonium bromide.

White or slightly coloured, crystalline powder or crystals.

mp: 88 °C to 89 °C.

Tetraethylammonium hydrogen sulfate. $C_8H_{21}NO_4S$. (M_r 227.3). *1116200.* [16873-13-5].

Hygroscopic powder.

mp: about 245 °C.

Tetraethylammonium hydroxide solution. $C_8H_{21}NO$. (M_r 147.3). *1100300.* [77-98-5].

A 200 g/L solution.

Colourless liquid, strongly alkaline.

d_{20}^{20}: about 1.01.

n_D^{20}: about 1.372.

HPLC grade.

Tetraethylene pentamine. $C_8H_{23}N_5$. (M_r 189.3). *1102000.* [112-57-2]. 3,6,9-Triazaundecan-1,11-diamine.

Colourless liquid, soluble in acetone.

n_D^{20}: about1.506.

Storage: protected from humidity and heat.

Tetraheptylammonium bromide. $C_{28}H_{60}BrN$. (M_r 490.7). *1088400.* [4368-51-8].

White or slightly coloured, crystalline powder or crystals.

mp: 89 °C to 91 °C.

Tetrahexylammonium bromide. $C_{24}H_{52}BrN$. (M_r 434.6). *1152500.* [4328-13-6]. *N,N,N*-Trihexylhexan-1-aminium bromide.

White or almost white, crystalline powder, hygroscopic.

mp: about 100 °C.

Tetrahexylammonium hydrogen sulfate. $C_{24}H_{53}NO_4S$. (M_r 451.8). *1116300.* [32503-34-7]. *N,N,N*-Trihexylhexan-1-aminium hydrogen sulfate.

White or almost white crystals.

mp: 100 °C to 102 °C.

Tetrahydrofuran. C_4H_8O. (M_r 72.1). *1088500.* [109-99-9]. Tetramethylene oxide.

Clear, colourless, flammable liquid, miscible with water, with ethanol (96 per cent).

d_{20}^{20}: about 0.89.

Do not distil if the tetrahydrofuran does not comply with the test for peroxides.

Peroxides. Place 8 mL of *potassium iodide and starch solution R* in a 12 mL ground-glass-stoppered cylinder about 1.5 cm in diameter. Fill completely with the substance to be examined, shake vigorously and allow to stand protected from light for 30 min. No colour is produced.

Tetrahydrofuran used in spectrophotometry complies with the following additional test.

Minimum transmittance (*2.2.25*) using *water R* as compensation liquid: 20 per cent at 255 nm, 80 per cent at 270 nm, 98 per cent at 310 nm.

Tetrahydrofuran for chromatography R. *1147100.*

Complies with the requirements prescribed for *tetrahydrofuran R* with the following additional requirements:

d_4^{20} = 0.8892.

bp: about 66 °C.

Content: minimum 99.8 per cent of C_4H_8O.

α-Tetralone. $C_{10}H_{10}O$. (M_r 146.2). *1171800.* [529-34-0]. 1-Oxotetraline. 3,4-Dihydronaphthalen-1(2*H*)-one.

bp: about 115 °C.

mp: about 5 °C.

Tetramethylammonium bromide. $C_4H_{12}BrN$. (M_r 154.1). *1156600.* [64-20-0]. *N,N,N*-Trimethylmethanaminium bromide.

White or slightly yellow crystals, freely soluble in water.

mp: about 285 °C, with decomposition.

Tetramethylammonium chloride. $C_4H_{12}ClN$. (M_r 109.6). *1100400.* [75-57-0].

Colourless crystals, soluble in water and in ethanol (96 per cent).

mp: about 300 °C, with decomposition.

Tetramethylammonium hydrogen sulfate. $C_4H_{13}NO_4S$. (M_r 171.2). *1116400.* [80526-82-5].

Hygroscopic powder.

mp: about 295 °C.

Tetramethylammonium hydroxide. $C_4H_{13}NO,5H_2O$. (M_r 181.2). *1122800.* [10424-65-4]. Tetramethylammonium hydroxide pentahydrate.

Suitable grade for HPLC.

Tetramethylammonium hydroxide solution. *1088600.* [75-59-2].

Content: minimum 10.0 per cent *m/m* of $C_4H_{13}NO$. (M_r 91.2).

Clear, colourless or very pale yellow liquid, miscible with water and with ethanol (96 per cent).

Assay. To 1.000 g add 50 mL of *water R* and titrate with *0.05 M sulfuric acid*, using 0.1 mL of *methyl red solution R* as indicator.

1 mL of *0.05 M sulfuric acid* is equivalent to 9.12 mg of $C_4H_{13}NO$.

Tetramethylammonium hydroxide solution, dilute. *1088601.*

Dilute 10 mL of *tetramethylammonium hydroxide solution R* to 100 mL with *aldehyde-free alcohol R*. Prepare immediately before use.

Tetramethylbenzidine. $C_{16}H_{20}N_2$. (M_r 240.3). *1132600.* [54827-17-7]. 3,3′,5,5′-Tetramethylbiphenyl-4,4′-diamine.

Powder, practically insoluble in water, very soluble in methanol.

mp: about 169 °C.

1,1,3,3-Tetramethylbutylamine. $C_8H_{19}N$. (M_r 129.3). *1141500.* [107-45-9]. 2-Amino-2,4,4-trimethylpentane.

Clear, colourless liquid.

d_{20}^{20}: about 0.805.

n_D^{20}: about 1.424.

bp: about 140 °C.

Tetramethyldiaminodiphenylmethane. $C_{17}H_{22}N_2$. (M_r 254.4). *1088700.* [101-61-1]. 4,4′-Methylenebis-(*N,N*-dimethylaniline).

White or bluish-white crystals or leaflets, practically insoluble in water, slightly soluble in ethanol (96 per cent), soluble in mineral acids.

mp: about 90 °C.

Tetramethyldiaminodiphenylmethane reagent. *1088701.*

Solution A. Dissolve 2.5 g of *tetramethyldiaminodiphenylmethane R* in 10 mL of *glacial acetic acid R* and add 50 mL of *water R*.

Solution B. Dissolve 5 g of *potassium iodide R* in 100 mL of *water R*.

Solution C. Dissolve 0.30 g of *ninhydrin R* in 10 mL of *glacial acetic acid R* and add 90 mL of *water R*.

Mix solution A, solution B and 1.5 mL of solution C.

Tetramethylethylenediamine. $C_6H_{16}N_2$. (M_r 116.2). *1088800.* [110-18-9]. *N,N,N′,N′*-Tetramethylethylenediamine.

Colourless liquid, miscible with water and with ethanol (96 per cent).

d_{20}^{20}: about 0.78.

n_D^{20}: about 1.418.

bp: about 121 °C.

Tetramethylsilane. $C_4H_{12}Si$. (M_r 88.2). *1088900.* [75-76-3]. TMS.

Clear, colourless liquid, very slightly soluble in water, soluble in acetone and in ethanol (96 per cent).

d_{20}^{20}: about 0.64.

n_D^{20}: about 1.358.

bp: about 26 °C.

Tetramethylsilane used in nuclear magnetic resonance spectrometry complies with the following additional test.

In the nuclear magnetic resonance spectrum of an approximately 10 per cent *V/V* solution of the tetramethylsilane in *deuterated chloroform R*, the intensity of any foreign signal, excluding those due to spinning side bands and to chloroform, is not greater than the intensity of the C-13 satellite signals located at a distance of 59.1 Hz on each side of the principal signal of tetramethylsilane.

Tetrandrine. $C_{38}H_{42}N_2O_6$. (M_r 623). *1178500.* [518-34-3].

Tetrapropylammonium chloride. $C_{12}H_{28}ClN$. (M_r 221.8). *1151900.* [5810-42-4].

White or almost white, crystalline powder, sparingly soluble in water.

mp: about 241 °C.

Tetrazolium blue. $C_{40}H_{32}Cl_2N_8O_2$. (M_r 728). *1089000.* [1871-22-3]. 3,3′-(3,3′-Dimethoxy[1,1′-biphenyl]-4,4′-diyl)bis[2,5-diphenyl-2*H*-tetrazolium] dichloride.

Yellow crystals, slightly soluble in water, freely soluble in ethanol (96 per cent) and in methanol, practically insoluble in acetone.

mp: about 245 °C, with decomposition.

Tetrazolium bromide. $C_{18}H_{16}BrN_5S$. (M_r 414.3). *1152700.* [298-93-1]. 3-(4,5-Dimethylthiazol-2-yl)-2,5-diphenyltetrazolium bromide. MTT.

Tetrazolium salt. $C_{20}H_{17}N_5O_6S_2$. (M_r 487.5). *1174200.* [138169-43-4]. 5-(3-Carboxymethoxyphenyl)-3-(4,5-dimethylthiazol-2-yl)-2-(4-sulfophenyl)-2*H*-tetrazolium, inner salt. MTS.

Thallous sulfate. Tl_2SO_4. (M_r 504.8). *1089100.* [7446-18-6]. Dithallium sulfate.

White or almost white, rhomboid prisms, slightly soluble in water, practically insoluble in ethanol (96 per cent).

Thebaine. $C_{19}H_{21}NO_3$. (M_r 311.4). *1089200.* [115-37-7]. (5*R*,9*R*,13*S*)-4,5-Epoxy-3,6-dimethoxy-9a-methylmorphina-6,8-diene.

White or pale yellow, crystalline powder, very slightly soluble in water, soluble in hot anhydrous ethanol and in toluene.

mp: about 193 °C.

Chromatography (*2.2.27*). Thin-layer chromatography (*2.2.27*) as prescribed in identification test B in the monograph *Raw opium (0777)*: apply to the plate as a band (20 mm × 3 mm) 20 µL of a 0.5 g/L solution; the chromatogram shows an orange-red or red principal band with an R_F of about 0.5.

Theobromine. *1138800.* [83-67-0].

See *Theobromine (0298)*.

Theophylline. *1089300.* [58-55-9].

See *Theophylline (0299)*.

Thiamazole. $C_4H_6N_2S$. (M_r 114.2). *1089400.* [60-56-0]. Methimazole. 1-Methyl-1*H*-imidazole-2-thiol.

White or almost white, crystalline powder, freely soluble in water, soluble in ethanol (96 per cent) and in methylene chloride.

mp: about 145 °C.

2-(2-Thienyl)acetic acid. $C_6H_6O_2S$. (M_r 142.1). *1089500.* [1918-77-0].

Brown powder.

mp: about 65 °C.

Thioacetamide. C_2H_5NS. (M_r 75.1). *1089600.* [62-55-5].

Crystalline powder or colourless crystals, freely soluble in water and in ethanol (96 per cent).

mp: about 113 °C.

Thioacetamide reagent. *1089601.*

To 0.2 mL of *thioacetamide solution R* add 1 mL of a mixture of 5 mL of *water R*, 15 mL of *1 M sodium hydroxide* and 20 mL of *glycerol (85 per cent) R*. Heat in a water-bath for 20 s. Prepare immediately before use.

Thioacetamide solution. *1089602.*

A 40 g/L solution.

Thiobarbituric acid. $C_4H_4N_2O_2S$. (M_r 144.2). *1111200.* [504-17-6]. 4,6-Dihydroxy-2-sulfanylpyrimidine.

Thiodiethylene glycol. $C_4H_{10}O_2S$. (M_r 122.2). *1122900.* [111-48-8]. Di(2-hydroxyethyl) sulfide.

Colourless or yellow, viscous liquid.

Content: minimum 99.0 per cent.

d_{20}^{20}: about 1.18.

Thioglycollic acid. $C_2H_4O_2S$. (M_r 92.1). *1089700.* [68-11-1]. 2-Mercaptoacetic acid.

Colourless liquid, miscible with water, soluble in ethanol (96 per cent).

Thiomalic acid. $C_4H_6O_4S$. (M_r 150.2). *1161600.* [70-49-5]. (2*RS*)-2-Sulfanylbutanedioic acid.

mp: 150 °C to 152 °C.

Thiomersal. $C_9H_9HgNaO_2S$. (M_r 404.8). *1089800.* [54-64-8]. Sodium mercurothiolate. Sodium 2-[(ethylmercurio)thio]benzoate.

Light, yellowish-white, crystalline powder, very soluble in water, freely soluble in ethanol (96 per cent).

Thiourea. CH_4N_2S. (M_r 76.1). *1089900.* [62-56-6].

White or almost white, crystalline powder or crystals, soluble in water and in ethanol (96 per cent).

mp: about 178 °C.

Threonine. *1090000.* [72-19-5].

See *Threonine (1049).*

Thrombin, bovine. *1090200.* [9002-04-4].

A preparation of the enzyme, obtained from bovine plasma, that converts fibrinogen into fibrin.

A yellowish-white powder.

Storage: at a temperature below 0 °C.

Thrombin, human. *1090100.* [9002-04-4].

Dried human thrombin. A preparation of the enzyme which converts human fibrinogen into fibrin. It is obtained from liquid human plasma and may be prepared by precipitation with suitable salts and organic solvents under controlled conditions of pH, ionic strength and temperature.

Yellowish-white powder, freely soluble in a 9 g/L solution of sodium chloride forming a cloudy, pale yellow solution.

Storage: in a sealed, sterile container under nitrogen, protected from light, at a temperature below 25 °C.

Thrombin solution, human. *1090101.*

Reconstitute *human thrombin R* as directed by the manufacturer and dilute to 5 IU/mL with *tris(hydroxymethyl)aminomethane sodium chloride buffer solution pH 7.4 R.*

Thrombin solution, human R1. *1090102.*

Reconstitute *human thrombin R* as directed by the manufacturer and dilute to 2.5 IU/mL with *phosphate buffer solution pH 6.5 R.*

Thromboplastin. *1090300.*

A preparation containing the membrane glycoprotein tissue factor and phospholipid, either purified from animal brain (usually rabbit) or human placenta or manufactured using recombinant DNA technology with added phospholipid. The preparation is formulated for routine use in the prothrombin time test and may contain calcium.

Thujone. $C_{10}H_{16}O$. (M_r 152.2). *1116500.* [76231-76-0]. 4-Methyl-1-(1-methylethyl)bicyclo[3.1.0]hexan-3-one.

Colourless or almost colourless liquid, practically insoluble in water, soluble in ethanol (96 per cent) and in many other organic solvents.

Thymidine. $C_{10}H_{14}N_2O_5$. (M_r 242.2). *1158900.* 1-(2-Deoxy-β-D-*erythro*-pentofuranosyl)-5-methylpyrimidine-2,4(1*H*,3*H*)-dione.

Needles, soluble in water, in hot ethanol (96 per cent) and in glacial acetic acid.

Thymine. $C_5H_6N_2O_2$. (M_r 126.1). *1090400.* [65-71-4]. 5-Methylpyrimidine-2,4(1*H*,3*H*)-dione.

Short needles or plates, slightly soluble in cold water, soluble in hot water. It dissolves in dilute solution of alkali hydroxides.

Thymol. *1090500.* [89-83-8]. See *Thymol (0791).*

Thymol used in gas chromatography complies with the following additional test.

Assay. Gas chromatography (*2.2.28*) as prescribed in the monograph *Peppermint oil (0405).*

Test solution. Dissolve 0.1 g in about 10 mL of *acetone R.*

Content: minimum 95.0 per cent, calculated by the normalisation procedure.

Thymol blue. $C_{27}H_{30}O_5S$. (M_r 466.6). *1090600.* [76-61-9]. Thymolsulfonphthalein. 4,4′-(3*H*-2,1-Benzoxathiol-3-ylidene)bis(2-isopropyl-5-methylphenol) *S,S*-dioxide.

Brownish-green or greenish-blue, crystalline powder, slightly soluble in water, soluble in ethanol (96 per cent) and in dilute solutions of alkali hydroxides.

Thymol blue solution. *1090601.*

Dissolve 0.1 g of *thymol blue R* in a mixture of 2.15 mL of *0.1 M sodium hydroxide* and 20 mL of *ethanol (96 per cent) R* and dilute to 100 mL with *water R.*

Test for sensitivity. To 0.1 mL of the thymol blue solution add 100 mL of *carbon dioxide-free water R* and 0.2 mL of *0.02 M sodium hydroxide.* The solution is blue. Not more than 0.15 mL of *0.02 M hydrochloric acid* is required to change the colour to yellow.

Colour change: pH 1.2 (red) to pH 2.8 (yellow); pH 8.0 (olive-green) to pH 9.6 (blue).

Thymolphthalein. $C_{28}H_{30}O_4$. (M_r 430.5). *1090700.* [125-20-2]. 3,3-Bis(4-hydroxy-5-isopropyl-2-methylphenyl)-3*H*-isobenzo-furan-1-one.

White or yellowish-white powder, practically insoluble in water, soluble in ethanol (96 per cent) and in dilute solutions of alkali hydroxides.

Thymolphthalein solution. *1090701.*

A 1 g/L solution in *ethanol (96 per cent) R.*

Test for sensitivity. To 0.2 mL of the thymolphthalein solution add 100 mL of *carbon dioxide-free water R.* The solution is colourless. Not more than 0.05 mL of *0.1 M sodium hydroxide* is required to change the colour to blue.

Colour change: pH 9.3 (colourless) to pH 10.5 (blue).

Tin. Sn. (A_r 118.7). *1090800.* [7440-31-5].

Silvery-white granules, soluble in hydrochloric acid with release of hydrogen.

Arsenic (*2.4.2, Method A*): maximum 10 ppm, determined on 0.1 g.

Titan yellow. $C_{28}H_{19}N_5Na_2O_6S_4$. ($M_r$ 696). *1090900.* [1829-00-1].

Schultz No. 280.

Colour Index No. 19540.
Thiazol yellow. Disodium 2,2′-[(1-triazene-1,3-diyl)di-4,1-phenylene]bis-[6-methylbenzothiazole-7-sulfonate].

A yellowish-brown powder, freely soluble in water and in ethanol (96 per cent).

Titan yellow paper. *1090901.*

Immerse strips of filter paper in *titan yellow solution R* and leave for a few minutes. Allow to dry at room temperature.

Titan yellow solution. *1090902.*

A 0.5 g/L solution.

Test for sensitivity. To 0.1 mL of the titan yellow solution add 10 mL of *water R*, 0.2 mL of *magnesium standard solution (10 ppm Mg) R* and 1.0 mL of *1 M sodium*

hydroxide. A distinct pink colour is visible by comparison with a reference solution prepared in a similar manner omitting the magnesium.

Titanium. Ti. (A_r 47.88). *1091000.* [7440-32-6].

Content: minimum 99 per cent.

Metal powder, fine wire (diameter not more than 0.5 mm), sponge.

mp: about 1668 °C.

Density: about 4.507 g/cm^3.

Titanium dioxide. *1117900.* [13463-67-7].

See *Titanium dioxide (0150)*.

Titanium trichloride. $TiCl_3$. (M_r 154.3). *1091200.* [7705-07-9]. Titanium(III) chloride.

Reddish-violet crystals, deliquescent, soluble in water and in ethanol (96 per cent).

mp: about 440 °C.

Storage: in an airtight container.

Titanium trichloride solution. *1091201.*

d_{20}^{20}: about 1.19.

A 150 g/L solution in hydrochloric acid (100 g/L HCl).

Titanium trichloride-sulfuric acid reagent. *1091202.*

Carefully mix 20 mL of *titanium trichloride solution R* with 13 mL of *sulfuric acid R*. Add sufficient *strong hydrogen peroxide solution R* to give a yellow colour. Heat until white fumes are evolved. Allow to cool. Dilute with *water R* and repeat the evaporation and addition of *water R* until a colourless solution is obtained. Dilute to 100 mL with *water R*.

TLC aluminium oxide G plate. *1165200.*

Support of metal, glass or plastic, coated with a layer of aluminium oxide (particle size 5-40 µm) containing about 10 per cent of calcium sulfate hemihydrate as a binder.

TLC octadecylsilyl silica gel plate. *1148600.*

Support of glass, metal or plastic coated with a layer of octadecylsilyl silica gel. The plate may contain an organic binder.

TLC octadecylsilyl silica gel F_{254} plate R. *1146600.*

Support of glass, metal or plastic coated with a layer of octadecylsilyl silica gel.

It contains a fluorescent indicator having a maximum absorbance in ultraviolet light at 254 nm.

TLC performance test solution. *1116600.*

Prepare a mixture of 1.0 mL of each of the following solutions and dilute to 10.0 mL with *acetone R*: a 0.5 g/L solution of *Sudan red G R* in *toluene R*, a 0.5 g/L solution of *methyl orange R* in *ethanol R* prepared immediately before use, a 0.5 g/L solution of *bromocresol green R* in *acetone R* and a 0.25 g/L solution of *methyl red R* in *acetone R*.

TLC silica gel plate. *1116700.*

Support of glass, metal or plastic, coated with a layer of silica gel of a suitable thickness and particle size (usually 2 µm to 10 µm for fine particle size [High Performance Thin-Layer Chromatography, HPTLC] plates and 5 µm to 40 µm for normal TLC plates). If necessary, the particle size is indicated after the name of the reagent in the tests where it is used.

The plate may contain an organic binder.

Chromatographic separation. Apply to the plate an appropriate volume (10 µL for a normal TLC plate and 1 µL to 2 µL for a fine particle size plate) of *TLC performance test solution R*. Develop over a pathlength two-thirds of the plate height, using a mixture of 20 volumes of *methanol R* and 80 volumes of *toluene R*. The plate is not satisfactory, unless the chromatogram shows four clearly separated spots, the spot of bromocresol green with an R_F value less than 0.15, the spot of methyl orange with an R_F value in the range of 0.1 to 0.25, the spot of methyl red with an R_F value in the range of 0.35 to 0.55 and the spot of Sudan red G with an R_F value in the range of 0.75 to 0.98.

TLC silica gel F_{254} plate. *1116800.*

Complies with the requirements prescribed for *TLC silica gel plate R* with the following modification.

It contains a fluorescent indicator having a maximum absorbance at 254 nm.

Fluorescence suppression. Apply separately to the plate at five points increasing volumes (1 µL to 10 µL for normal TLC plates and 0.2 µL to 2 µL for fine particle size plates) of a 1 g/L solution of *benzoic acid R* in a mixture of 15 volumes of *anhydrous ethanol R* and 85 volumes of *cyclohexane R*. Develop over a pathlength half of the plate height with the same mixture of solvents. After evaporating the solvents examine the chromatogram in ultraviolet light at 254 nm. For normal TLC plates the benzoic acid appears as dark spots on a fluorescent background approximately in the middle of the chromatogram for quantities of 2 µg and greater. For fine particle size plates the benzoic acid appears as dark spots on a fluorescent background approximately in the middle of the chromatogram for quantities of 0.2 µg and greater.

TLC silica gel F_{254}, silanised plate. *1117200.*

It complies with the requirements prescribed for *TLC silanised silica gel plate R* with the following modification.

It contains a fluorescent indicator having a maximum absorbance at 254 nm.

TLC silica gel G plate. *1116900.*

Complies with the requirements prescribed for *TLC silica gel plate R* with the following modification.

It contains calcium sulfate hemihydrate as binder.

TLC silica gel GF_{254} plate. *1117000.*

Complies with the requirements prescribed for *TLC silica gel plate R* with the following modifications.

It contains calcium sulfate hemihydrate as binder and a fluorescent indicator having a maximum absorbance at 254 nm.

Fluorescence suppression. Complies with the test prescribed for *TLC silica gel F_{254} plate R*.

TLC silica gel plate for aminopolyether test. *1172700.*

Immerse a *TLC silica gel plate R* in *iodoplatinate reagent R1* for 5-10 s. Dry at room temperature for 12 h, protected from light.

Storage: protected from light, in an open container; use within 30 days after preparation.

TLC silica gel plate for chiral separations, octadecylsilyl. *1137700.*

Support of glass, metal or plastic, coated with a layer of octadecylsilyl silica gel, impregnated with Cu^{2+} ions and enantiomerically pure hydroxyproline. The plate may contain an organic binder.

TLC silica gel, silanised plate. *1117100.*

Support of glass, metal or plastic, coated with a layer of silanised silica gel of a suitable thickness and particle size (usually 2 µm to 10 µm for fine particle size [High Performance Thin-Layer Chromatography, HPTLC] plates and 5 µm to 40 µm for normal TLC plates). If necessary, the particle size is indicated after the name of the reagent in the tests where it is used.

The plate may contain an organic binder.

Chromatographic separation. Introduce 0.1 g each of *methyl laurate R*, *methyl myristate R*, *methyl palmitate R* and *methyl stearate R* into a 250 mL conical flask. Add 40 mL of *alcoholic potassium hydroxide solution R* and heat under a reflux condenser on a water-bath for 1 h. Allow to cool, transfer

the solution to a separating funnel by means of 100 mL of *water R*, acidify (pH 2 to 3) with *dilute hydrochloric acid R* and shake with three quantitites each of 10 mL of *methylene chloride R*. Dry the combined methylene chloride extracts over *anhydrous sodium sulfate R*, filter and evaporate to dryness on a water-bath. Dissolve the residue in 50 mL of *methylene chloride R*. Examine by thin-layer chromatography (*2.2.27*), using *TLC silanised silica gel plate R*. Apply an appropriate quantity (about 10 µL for normal TLC plates and about 1 µL to 2 µL for fine particle size plates) of the methylene chloride solution at each of three separate points. Develop over a pathlength two-thirds of the plate height with a mixture of 10 volumes of *glacial acetic acid R*, 25 volumes of *water R* and 65 volumes of *dioxan R*. Dry the plate at 120 °C for 30 min. Allow to cool, spray with a 35 g/L solution of *phosphomolybdic acid R* in *2-propanol R* and heat at 150 °C until the spots become visible. Treat the plate with ammonia vapour until the background is white. The chromatograms show four clearly separated, well-defined spots.

α-Tocopherol. *1152300.* [10191-41-0].
See *all-rac-α-Tocopherol (0692)*.

α-Tocopheryl acetate. *1152400.* [7695-91-2].
See *all-rac-α-Tocopheryl acetate (0439)*.

***o*-Tolidine.** $C_{14}H_{16}N_2$. (M_r 212.3). *1123000.* [119-93-7]. 3,3′-Dimethylbenzidine.
Content: minimum 97.0 per cent.
Light brownish, crystalline power.
mp: about 130 °C.

***o*-Tolidine solution.** *1123001.*
Dissolve 0.16 g of *o-tolidine R* in 30.0 mL of *glacial acetic acid R*, add 1.0 g of *potassium iodide R* and dilute to 500.0 mL with *water R*.

Toluene. C_7H_8. (M_r 92.1). *1091300.* [108-88-3]. Methylbenzene.
Clear, colourless, flammable liquid, very slightly soluble in water, miscible with ethanol (96 per cent).
d_{20}^{20}: 0.865 to 0.870.
bp: about 110 °C.

Toluene, sulfur-free. *1091301.*
Complies with the requirements prescribed for *toluene R* with the following additional requirements.
Sulfur compounds. To 10 mL add 1 mL of *anhydrous ethanol R* and 3 mL of *potassium plumbite solution R* and boil under a reflux condenser for 15 min. Allow to stand for 5 min. No darkening is produced in the aqueous layer.
Thiophen-related substances. Shake 2 mL with 5 mL of *isatin reagent R* for 5 min and allow to stand for 15 min. No blue colour is produced in the lower layer.

Toluenesulfonamide. $C_7H_9NO_2S$. (M_r 171.2). *1091500.* [70-55-3]. 4-Methylbenzenesulfonamide. *p*-Toluenesulfonamide.
White or almost white, crystalline powder, slightly soluble in water, soluble in ethanol (96 per cent) and in solutions of alkali hydroxides.
mp: about 136 °C.
Chromatography. Thin-layer chromatography (*2.2.27*) as prescribed in the monograph *Tolbutamide (0304)*; the chromatogram shows only one principal spot.

***o*-Toluenesulfonamide.** $C_7H_9NO_2S$. (M_r 171.2). *1091400.* [88-19-7]. 2-Methylbenzenesulfonamide.
White or almost white, crystalline powder, slightly soluble in water, soluble in ethanol (96 per cent) and in solutions of alkali hydroxides.
mp: about 156 °C.

***p*-Toluenesulfonamide.** *1091500.* [70-55-3].
See *toluenesulfonamide R*.

Toluenesulfonic acid. $C_7H_8O_3S,H_2O$. (M_r 190.2). *1091600.* [6192-52-5]. 4-Methylbenzenesulfonic acid.
Content: minimum 87.0 per cent of $C_7H_8O_3S$.
White or almost white, crystalline powder or crystals, freely soluble in water, soluble in ethanol (96 per cent).

Toluenesulfonylurea. $C_8H_{10}N_2O_3S$. (M_r 214.2). *1177000.* [1694-06-0]. 4-Methylbenzenesulfonylurea. *p*-Toluenesulfonylurea. (4-Methylphenyl)sulfonylurea.
White or almost white, crystalline powder.
mp: 196 to 198 °C.

***o*-Toluidine.** C_7H_9N. (M_r 107.2). *1091700.* [95-53-4]. 2-Methylaniline.
Pale-yellow liquid becoming reddish-brown on exposure to air and light, slightly soluble in water, soluble in ethanol (96 per cent) and in dilute acids.
d_{20}^{20}: about 1.01.
n_D^{20}: about 1.569.
bp: about 200 °C.
Storage: in an airtight container, protected from light.

***o*-Toluidine hydrochloride.** $C_7H_{10}ClN$. (M_r 143.6). *1117300.* [636-21-5]. 2-Methylaniline hydrochloride. 2-Methylbenzenamine hydrochloride.
Content: minimum 98.0 per cent.
mp: 215 °C to 217 °C.

***p*-Toluidine.** C_7H_9N. (M_r 107.2). *1091800.* [106-49-0]. 4-Methylaniline.
Lustrous plates or flakes, slightly soluble in water, freely soluble in acetone and in ethanol (96 per cent).
mp: about 44 °C.

Toluidine blue. $C_{15}H_{16}ClN_3S$. (M_r 305.8). *1091900.* [92-31-9].
Schultz No. 1041.
Colour Index No. 52040.
Toluidine Blue O. 3-Amino-7-dimethylamino-2-methylphenothiazin-5-ium chloride.
Dark-green powder, soluble in water, slightly soluble in ethanol (96 per cent).

Tosylarginine methyl ester hydrochloride. $C_{14}H_{23}ClN_4O_4S$. (M_r 378.9). *1092000.* [1784-03-8]. *N*-Tosyl-L-arginine methyl ester hydrochloride. Methyl (*S*)-5-guanidino-2-(4-methylbenzenesulfonamido)valerate hydrochloride.
$[\alpha]_D^{20}$: − 12 to − 16, determined on a 40 g/L solution.
mp: about 145 °C.

Tosylarginine methyl ester hydrochloride solution. *1092001.*
To 98.5 mg of *tosylarginine methyl ester hydrochloride R* add 5 mL of *tris(hydroxymethyl)aminomethane buffer solution pH 8.1 R* and shake to dissolve. Add 2.5 mL of *methyl red mixed solution R* and dilute to 25.0 mL with *water R*.

Tosyl-lysyl-chloromethane hydrochloride. $C_{14}H_{22}Cl_2N_2O_3S$. (M_r 369.3). *1092100.* [4238-41-9]. *N*-Tosyl-L-lysyl-chloromethane hydrochloride. (3*S*)-7-Amino-1-chloro-3-(4-methylbenzenesulfonamido)heptan-2-one hydrochloride.
$[\alpha]_D^{20}$: − 7 to − 9, determined on a 20 g/L solution.
mp: about 155 °C, with decomposition.
$A_{1\,cm}^{1\%}$: 310 to 340, determined at 230 nm in *water R*.

Tosylphenylalanylchloromethane. $C_{17}H_{18}ClNO_3S$. (M_r 351.9). *1092200.* [402-71-1]. *N*-Tosyl-L-phenylalanylchloromethane.

$[\alpha]_D^{20}$: – 85 to – 89, determined on a 10 g/L solution in *ethanol (96 per cent) R*.

mp: about 105 °C.

$A_{1\,cm}^{1\%}$: 290 to 320, determined at 228.5 nm in *ethanol (96 per cent) R*.

Toxaphene. *1132800.* [8001-35-2].

A mixture of polychloro derivatives.

mp: 65 °C to 90 °C.

A suitable certified reference solution (10 ng/µL in iso-octane) may be used.

Tragacanth. *1092300.* [9000-65-1].

See *Tragacanth (0532)*.

Tanshinone II_A. $C_{19}H_{18}O_3$. (M_r 294.3). *1184800.* [568-72-9]. 1,6,6-Trimethyl-6,7,8,9-tetrahydrophenanthro[1,2-*b*]furan-10,11-dione.

Triacetin. $C_9H_{14}O_6$. (M_r 218.2). *1092400.* [102-76-1]. Propane-1,2,3-triyl triacetate. Glycerol triacetate.

Almost clear, colourless to yellowish liquid, soluble in water, miscible with ethanol (96 per cent).

d_{20}^{20}: about 1.16.

n_D^{20}: about 1.43.

bp: about 260 °C.

Triamcinolone. $C_{21}H_{27}FO_6$. (M_r 394.4). *1111300.* [124-94-7]. 9-Fluoro-11β,16α,17,21-tetrahydroxypregna-1,4-diene-3,20-dione.

A crystalline powder.

mp: 262 °C to 263 °C.

Triamcinolone acetonide. *1133100.* [76-25-5].

See *Triamcinolone acetonide (0533)*.

Tribromophenol. $C_6H_3Br_3O$. (M_r 330.8). *1165300.* [118-79-6]. 2,4,6-Tribromophenol.

Tributyl citrate. $C_{18}H_{32}O_7$. (M_r 360.4). *1152800.* [77-94-1]. Tributyl 2-hydroxypropane-1,2,3-tricarboxylate.

d_4^{20}: about 1.043.

n_D^{20}: about 1.445.

Tributyl phosphate. $C_{12}H_{27}O_4P$. (M_r 266.3). *1179900.* [126-73-8]. Tributoxyphosphine oxide. Tributoxyphosphane oxide.

Colourless liquid, slightly soluble in water, soluble in the usual organic solvents.

d_{25}^{25}: about 0.976.

n_D^{25}: about 1.422.

bp: about 289 °C, with decomposition.

Tributylphosphine. $C_{12}H_{27}P$. (M_r 202.3). *1187100.* [998-40-3].

Clear, colourless liquid.

bp: about 240 °C.

mp: about – 60 °C.

Trichlorethylene. *1102100.*

See *Trichloroethylene R*.

Trichloroacetic acid. $C_2HCl_3O_2$. (M_r 163.4). *1092500.* [76-03-9].

Colourless crystals or a crystalline mass, very deliquescent, very soluble in water and in ethanol (96 per cent).

Storage: in an airtight container.

Trichloroacetic acid solution. *1092501.*

Dissolve 40.0 g of *trichloroacetic acid R* in *water R* and dilute to 1000.0 mL with the same solvent. Verify the concentration by titration with *0.1 M sodium hydroxide* and adjust if necessary to 40 ± 1 g/L.

1,1,1-Trichloroethane. $C_2H_3Cl_3$. (M_r 133.4). *1092600.* [71-55-6]. Methylchloroform.

Non-flammable liquid, practically insoluble in water, soluble in acetone and in methanol.

d_{20}^{20}: about 1.34.

n_D^{20}: about 1.438.

bp: about 74 °C.

Trichloroethylene. C_2HCl_3. (M_r 131.4). *1102100.* [79-01-6].

Colourless liquid, practically insoluble in water, miscible with ethanol (96 per cent).

d_{20}^{20}: about 1.46.

n_D^{20}: about 1.477.

Trichlorotrifluoroethane. $C_2Cl_3F_3$. (M_r 187.4). *1092700.* [76-13-1]. 1,1,2-Trichloro-1,2,2-trifluoroethane.

Colourless, volatile liquid, practically insoluble in water, miscible with acetone.

d_{20}^{20}: about 1.58.

Distillation range (*2.2.11*). Not less than 98 per cent distils between 47 °C and 48 °C.

Tricine. $C_6H_{13}NO_5$. (M_r 179.2). *1138900.* [5704–04–1]. *N*-[2-Hydroxy-1,1-bis(hydroxymethyl)ethyl]glycine.

Use electrophoresis-grade reagent.

mp: about 183 °C.

Tricosane. $C_{23}H_{48}$. (M_r 324.6). *1092800.* [638-67-5].

White or almost white crystals, practically insoluble in water, soluble in hexane.

mp: about 48 °C.

Tridocosahexaenoin. $C_{69}H_{98}O_6$. (M_r 1023.5). *1144900.* [124596-98-1]. Triglyceride of docosahexaenoic acid (C22:6). Glycerol tridocosahexaenoate. Propane-1,2,3-triyl tri-(*all-Z*)-docosa-4,7,10,13,16,19-hexaenoate.

The reagent from Nu-Chek Prep, Inc. has been found suitable.

Triethanolamine. *1092900.* [102-71-6].

See *Trolamine (1577)*.

Triethylamine. $C_6H_{15}N$. (M_r 101.2). *1093000.* [121-44-8]. *N,N*-Diethylethanamine.

Colourless liquid, slightly soluble in water at a temperature below 18.7 °C, miscible with ethanol (96 per cent).

d_{20}^{20}: about 0.727.

n_D^{20}: about 1.401.

bp: about 90 °C.

Triethylamine R1. $C_6H_{15}N$. (M_r 101.2). *1093001.* [121-44-8]. *N,N*-Diethylethanamine.

Complies with the requirements prescribed for *triethylamine R* with the following additional requirements.

Content: minimum 99.5 per cent, determined by gas chromatography.

Water: maximum 0.1 per cent.

Use freshly distilled or from a freshly opened container.

Triethylamine R2. $C_6H_{15}N$. (M_r 101.2). *1093002.* [121-44-8]. *N,N*-Diethylethanamine.

Complies with the requirements prescribed for *triethylamine R* and with the following additional requirements.

Content: minimum 99.5 per cent, determined by gas chromatography.

Water: maximum 0.2 per cent.

It is suitable for gradient elution in liquid chromatography.

Use freshly distilled or from a freshly opened container.

Triethylenediamine. $C_6H_{12}N_2$. (M_r 112.2). *1093100.* 1,4-Diazabicyclo[2.2.2]octane.

Crystals, very hygroscopic, sublimes readily at room temperature, freely soluble in water, in acetone and in anhydrous ethanol.

bp: about 174 °C.

mp: about 158 °C.

Storage: in an airtight container.

Triethyl phosphonoformate. $C_7H_{15}O_5P$. (M_r 210.2). *1132900.* [1474-78-8]. Ethyl (diethoxyphosphoryl)formate.

Colourless liquid.

$bp_{12\ mm}$: about 135 °C.

Triflumuron. $C_{15}H_{10}ClF_3N_2O_3$. (M_r 358.7). *1180800.* [64628-44-0]. 1-(2-Chlorobenzoyl)-3-(4-triflumoromethoxyphenyl)urea.

White or almost white crystalline powder, practically insoluble in water, sparingly soluble in acetone and in methylene chloride.

Trifluoroacetic acid. $C_2HF_3O_2$. (M_r 114.0). *1093200.* [76-05-1].

Content: minimum 99 per cent.

Liquid, miscible with acetone and with ethanol (96 per cent).

d_{20}^{20}: about 1.53.

bp: about 72 °C.

Use a grade suitable for protein sequencing.

Storage: in an airtight container.

Trifluoroacetic anhydride. $C_4F_6O_3$. (M_r 210.0). *1093300.* [407-25-0].

Colourless liquid.

d_{20}^{20}: about 1.5.

3-Trifluoromethylaniline. $C_7H_6F_3N$. (M_r 161.1). *1171900.* [98-16-8]. 3-(Trifluoromethyl)aniline. α,α,α-Trifluoro-*m*-toluidine. 3-(Trifluoromethyl)benzenamide.

Colourless liquid.

Density: 1.30 g/cm^3 (20 °C).

4-Trifluoromethylphenol. $C_7H_5F_3O$. (M_r 162.1). *1161700.* [402-45-9].

White or light yellow, crystalline solid or powder.

mp: about 46 °C.

Trigonelline hydrochloride. $C_7H_8ClNO_2$. (M_r 173.6). *1117400.* [6138-41-6]. 3-Carboxy-1-methylpyridinium chloride. Nicotinic acid *N*-methylbetaine hydrochloride.

Crystalline powder, very soluble in water, soluble in ethanol (96 per cent).

mp: about 258 °C.

Trimethylpentane. C_8H_{18}. (M_r 114.2). *1093400.* [540-84-1]. Iso-octane. 2,2,4-Trimethylpentane.

Colourless, flammable liquid, practically insoluble in water, soluble in anhydrous ethanol.

d_{20}^{20}: 0.691 to 0.696.

n_D^{20}: 1.391 to 1.393.

Distillation range (*2.2.11*). Not less than 95 per cent distils between 98 °C and 100 °C.

Trimethylpentane used in spectrophotometry complies with the following additional test.

Minimum transmittance (*2.2.25*) using *water R* as compensation liquid: 98 per cent from 250 nm to 420 nm.

Trimethylpentane R1. *1093401.*

Complies with the requirements prescribed for *trimethylpentane R* with the following modification.

Absorbance (2.2.25). Not more than 0.07 from 220 nm to 360 nm, determined using *water R* as the compensation liquid.

Trimethylpentane for chromatography. *1093402.*

Complies with the requirements prescribed for *trimethylpentane R* with the following additional requirement.

Residue on evaporation: maximum 2 mg/L.

***N,O*-bis(Trimethylsilyl)acetamide.** $C_8H_{21}NOSi_2$. (M_r 203.4). *1093600.* [10416-59-8].

Colourless liquid.

d_{20}^{20}: about 0.83.

***N*-Trimethylsilylimidazole.** $C_6H_{12}N_2Si$. (M_r 140.3). *1100500.* [18156-74-6]. 1-Trimethylsilylimidazole.

Colourless, hygroscopic liquid.

d_{20}^{20}: about 0.96.

n_D^{20}: about 1.48.

Storage: in an airtight container.

***N,O*-bis(Trimethylsilyl)trifluoroacetamide.** $C_8H_{18}F_3NOSi_2$. (M_r 257.4). *1133200.* [25561-30-2]. BSTFA.

Colourless liquid.

d_{20}^{20}: about 0.97.

n_D^{20}: about 1.38.

bp_{12mm}: about 40 °C

Trimethylsulfonium hydroxide. $C_3H_{10}OS$. (M_r 94.2). *1145000.* [17287-03-5].

d_4^{20}: about 0.81.

Trimethyltin chloride. C_3H_9ClSn. (M_r 199.3). *1170900.* [1066-45-1]. Chlorotrimethylstannane.

2,4,6-Trinitrobenzene sulfonic acid. $C_6H_3N_3O_9S,3H_2O$. (M_r 347.2). *1117500.* [2508-19-2].

White or almost white, crystalline powder, soluble in water.

mp: 190 °C to 195 °C.

Triolein. $C_{57}H_{104}O_6$. (M_r 885.4). *1168200.* [122-32-7]. Propane-1,2,3-triyl tris[(9*Z*)-octadec-9-enoate]. *sn*-Glyceryl trioleate. Glycerol trioleate. Oleyl triglyceride.

Content: minimum 99.0 per cent.

Triphenylmethanol. $C_{19}H_{16}O$. (M_r 260.3). *1093700.* [76-84-6]. Triphenylcarbinol.

Colourless crystals, practically insoluble in water, freely soluble in ethanol (96 per cent).

Triphenyltetrazolium chloride. $C_{19}H_{15}ClN_4$. (M_r 334.8). *1093800.* [298-96-4]. 2,3,5-Triphenyl-2*H*-tetrazolium chloride.

Content: minimum 98.0 per cent of $C_{19}H_{15}ClN_4$.

Pale or dull-yellow powder, soluble in water, in acetone and in ethanol (96 per cent).

mp: about 240 °C, with decomposition.

Assay. Dissolve 1.000 g in a mixture of 5 mL of *dilute nitric acid R* and 45 mL of *water R*. Add 50.0 mL of *0.1 M silver nitrate* and heat to boiling. Allow to cool, add 3 mL of *dibutyl phthalate R*, shake vigorously and titrate with *0.1 M ammonium thiocyanate*, using 2 mL of *ferric ammonium sulfate solution R2* as indicator.

1 mL of *0.1 M silver nitrate* is equivalent to 33.48 mg of $C_{19}H_{15}ClN_4$.

Storage: protected from light.

Triphenyltetrazolium chloride solution. *1093801.*

A 5 g/L solution in *aldehyde-free alcohol R*.

Storage: protected from light.

Triscyanoethoxypropane. $C_{12}H_{17}N_3O_3$. (M_r 251.3). *1093900.* 1,2,3-Tris(2-cyanoethoxy)propane.

Viscous, brown-yellow liquid, soluble in methanol. Used as a stationary phase in gas chromatography.

d_{20}^{20}: about 1.11.

Viscosity (*2.2.9*): about 172 mPa·s.

1,3,5-Tris[3,5-di(1,1-dimethylethyl)-4-hydroxybenzyl]-1,3,5-triazine-2,4,6(1*H*,3*H*,5*H*)-trione. $C_{48}H_{69}O_6N_3$. (M_r 784.1). *1094000.* [27676-62-6].

White or almost white, crystalline powder.

mp: 218 °C to 222 °C.

Tris[2,4-di(1,1-dimethylethyl)phenyl] phosphite. $C_{42}H_{63}O_3P$. (M_r 647). *1094100.* [31570-04-4].

White or almost white powder.

mp: 182 °C to 186 °C.

Tris(hydroxymethyl)aminomethane. *1094200.* [77-86-1].

See *Trometamol (1053)*.

Tris(hydroxymethyl)aminomethane solution. *1094201.*

A solution containing the equivalent of 24.22 g of $C_4H_{11}NO_3$ in 1000.0 mL.

Tris(hydroxymethyl)aminomethane solution R1. *1094202.*

Dissolve 60.6 mg of *tris(hydroxymethyl)aminomethane R* and 0.234 g of *sodium chloride R* in *water R* and dilute to 100 mL with the same solvent.

Storage: at 2 °C to 8 °C; use within 3 days.

Tripotassium phosphate trihydrate. $K_3PO_4,3H_2O$. (M_r 266.3). *1155300.* [22763-03-7].

White or almost white crystalline powder, freely soluble in water.

Trisodium phosphate dodecahydrate. $Na_3PO_4,12H_2O$. (M_r 380.1). *1094300.* [10101-89-0].

Colourless or white or almost white crystals, freely soluble in water.

Tropic acid. $C_9H_{10}O_3$. (M_r 166.17). *1172000.* [529-64-6]. (2*RS*)-3-Hydroxy-2-phenylpropanoic acid.

Troxerutin. $C_{33}H_{42}O_{19}$. (M_r 743). *1160300.* [7085-55-4]. Trihydroxyethylrutin. 3′,4′,7-Tris[*O*-(2-hydroxyethyl)]rutin. 2-[3,4-Bis(2-hydroxyethoxy)phenyl]-3-[[6-*O*-(6-deoxy-α-L-mannopyranosyl)-β-D-glucopyranosyl]oxy]-5-hydroxy-7-(2-hydroxyethoxy)-4*H*-1-benzopyran-4-one.

mp: 168 °C to 176 °C.

Trypsin. *1094500.* [9002-07-7].

A proteolytic enzyme obtained by activation of trypsinogen extracted from the pancreas of beef (*Bos taurus* L.).

White or almost white, crystalline or amorphous powder, sparingly soluble in water.

Trypsin for peptide mapping. *1094600.* [9002-07-7].

Trypsin of high purity treated to eliminate chymotryptic activity.

Tryptophan. $C_{11}H_{12}N_2O_2$. (M_r 204.2). *1094700.* [73-22-3].

White or yellowish-white, crystalline powder or colourless crystals, slightly soluble in water, very slightly soluble in ethanol (96 per cent).

$[\alpha]_D^{20}$: about − 30, determined on a 10 g/L solution.

Tyramine. $C_8H_{11}NO$. (M_r 137.2). *1117600.* [51-67-2]. 4-(2-Aminoethyl)phenol.

Crystals, sparingly soluble in water, soluble in boiling anhydrous ethanol.

mp: 164 °C to 165 °C.

Tyrosine. $C_9H_{11}NO_3$. (M_r 181.2). *1094800.* [60-18-4]. 2-Amino-3-(4-hydroxyphenyl)propionic acid.

White or almost white, crystalline powder, or colourless or white or almost white crystals, slightly soluble in water, practically insoluble in acetone and in anhydrous ethanol, soluble in dilute hydrochloric acid and in solutions of alkali hydroxides.

Umbelliferone. $C_9H_6O_3$. (M_r 162.1). *1137500.* [93-35-6]. 7-Hydroxycoumarin. 7-Hydroxy-2*H*-1-benzopyran-2-one.

Needles from water.

mp: 225 °C to 228 °C.

Uracil. $C_4H_4N_2O_2$. (M_r 112.1). *1161800.* [66-22-8].

Content: minimum 95.0 per cent.

Urea. *1095000.* [57-13-6].

See *Urea (0743)*.

Uridine. $C_9H_{12}N_2O_6$. (M_r 244.2). *1095100.* [58-96-8]. 1-β-D-Ribofuranosyluracil.

White or almost white, crystalline powder, soluble in water.

mp: about 165 °C.

Ursolic acid. $C_{30}H_{48}O_3$. (M_r 456.7). *1141600.* [77-52-1]. 3β-Hydroxyurs-12-en-28-oic acid.

White or almost white powder, practically insoluble in water, sparingly soluble in methanol, slightly soluble in ethanol (96 per cent).

$[\alpha]_D^{21}$: about 67.50, determined on a 10 g/L solution in a 56.1 g/L solution of *potassium hydroxide R* in *ethanol (96 per cent) R*.

mp: 285 °C to 288 °C.

Valencene. $C_{15}H_{24}$. (M_r 204.4). *1152100.* [4630-07-3]. 4β*H*,5α-Eremophila-1(10),11-diene. (1*R*,7*R*,8a*S*)-1,8a-Dimethyl-7-(1-methylethenyl)-1,2,3,5,6,7,8,8a-octahydronaphthalene.

Oily, colourless or pale yellow liquid, with a characteristic odour, practically insoluble in water, soluble in ethanol (96 per cent).

d_4^{20}: about 0.918.

n_D^{20}: about 1.508.

bp: about 123 °C.

Valencene used in gas chromatography complies with the following additional test.

Assay. Gas chromatography (*2.2.28*) as prescribed in the monograph *Sweet orange oil (1811)*.

Content: minimum 80 per cent, calculated by the normalisation procedure.

Valerenic acid. $C_{15}H_{22}O_2$. (M_r 234.3). *1165700.* [3569-10-6]. (2*E*)-3-[(4*S*,7*R*,7a*R*)-3,7-Dimethyl-2,4,5,6,7,7a-hexahydro-1*H*-inden-4-yl]-2-methylprop-2-enoic acid.

mp: 134 °C to 138 °C.

Valeric acid. $C_5H_{10}O_2$. (M_r 102.1). *1095200.* [109-52-4]. Pentanoic acid.

Colourless liquid, soluble in water, freely soluble in ethanol (96 per cent).

d_{20}^{20}: about 0.94.

n_D^{20}: about 1.409.

bp: about 186 °C.

Valine. *1185300.* [72-18-4].

See *Valine (0796)*.

Vanillin. *1095300.* [121-33-5].

See *Vanillin (0747)*.

Vanillin reagent. *1095301.*

Carefully add, dropwise, 2 mL of *sulfuric acid R* to 100 mL of a 10 g/L solution of *vanillin R* in *ethanol (96 per cent) R*.

Storage: use within 48 h.

Vanillin solution, phosphoric. *1095302.*

Dissolve 1.0 g of *vanillin R* in 25 mL of *ethanol (96 per cent) R*. Add 25 mL of *water R* and 35 mL of *phosphoric acid R*.

Veratrole. $C_8H_{10}O_2$. (M_r 138.2). *1165400.* [91-16-7]. 1,2-Dimethoxybenzene.

d_4^{20}: 1.085.

n_D^{20}: 1.534.

bp: about 206 °C.

mp: about 22 °C.

Verbenone. $C_{10}H_{14}O$. (M_r 150.2). *1140500.* [1196-01-6]. (1*S*,5*S*)-4,6,6-Trimethylbicyclo[3.1.1]hept-3-en-2-one.

Oil with a characteristic odour, practically insoluble in water, miscible with organic solvents.

d_{20}^{20}: about 0.978.

n_D^{18}: about 1.49.

$[\alpha]_D^{18}$: about + 249.6.

bp: 227 °C to 228 °C.

mp: about 6.5 °C.

Verbenone used in gas chromatography complies with the following additional test.

Assay. Gas chromatography (*2.2.28*) as prescribed in the monograph *Rosemary oil (1846)*.

Content: minimum 99 per cent, calculated by the normalisation procedure.

Vinyl acetate. $C_4H_6O_2$. (M_r 86,10). *1111800.* [108-05-4]. Ethenyl acetate.

d_{20}^{20}: about 0.930.

bp: about 72 °C.

Vinyl chloride. C_2H_3Cl. (M_r 62.5). *1095400.* [75-01-4].

Colourless gas, slightly soluble in organic solvents.

Vinyl polymer for chromatography, octadecyl. *1155400.*

Spherical particles (5 µm) of a vinyl alcohol copolymer chemically modified by bonding of octadecyl groups on the hydroxyl groups.

Vinyl polymer for chromatography, octadecylsilyl. *1121600.*

Spherical particles (5 µm) of a vinyl alcohol copolymer bonded to an octadecylsilane. Carbon content of 17 per cent.

2-Vinylpyridine. C_7H_7N. (M_r 105.1). *1102200.* [100-69-6].

Yellow liquid, miscible in water.

d_{20}^{20}: about 0.97.

n_D^{20}: about 1.549.

4-Vinylpyridine. C_7H_7N. (M_r 105.1). *1187200.* [100-43-6]. 4-Ethenylpyridine.

Clear, deep yellowish-brown liquid.

bp: 58-61 °C.

1-Vinylpyrrolidin-2-one. C_6H_9NO. (M_r 111.1). *1111900.* [88-12-0]. 1-Ethenylpyrrolidin-2-one.

Content: minimum 99.0 per cent.

Clear colourless liquid.

Water (*2.5.12*): maximum 0.1 per cent, determined on 2.5 g. Use as the solvent, a mixture of 50 mL of *anhydrous methanol R* and 10 mL of *butyrolactone R*.

Assay. Gas chromatography (*2.2.28*): use the normalisation procedure.

Column:

- *material*: fused-silica;
- *size*: *l* = 30 m, Ø = 0.5 mm;
- *stationary phase*: *macrogol 20 000 R*.

Carrier gas: *helium for chromatography R*.

Temperature:

	Time (min)	Temperature (°C)
Column	0 - 1	80
	1 - 12	80 → 190
	12 - 27	190
Injection port		190

Detection: flame-ionisation.

Injection: 0.3 µL of the substance to be examined.

Adjust the flow rate of the carrier gas so that the retention time of the peak corresponding to 1-vinylpyrrolidin-2-one is about 17 min.

Vitexin. $C_{21}H_{20}O_{10}$. (M_r 448.4). *1133300.* [3681-93-4]. Apigenin 8-glucoside.

Yellow powder.

Storage: in an airtight container, protected from light.

Water. *1095500.* [7732-18-5].

See *Purified water (0008)*.

Water R1. *1095509.*

Prepared from *distilled water R* by multiple distillation. Remove carbon dioxide by boiling for at least 15 min before use in a boiling flask of fused silica or borosilicate glass and cool. Any other suitable method may be used. The boiling flask has been already used for the test or has been filled with *water R* and kept in an autoclave at 121 °C for at least 1 h prior to first use. When tested immediately before use, *water R1* is neutral to *methyl red solution R*, i.e. it shall produce an orange-red (not a violet-red or yellow) colour corresponding to pH 5.5 ± 0.1 when 0.05 mL of *methyl red solution R* is added to 50 mL of the water to be examined.

Conductivity: maximum 1 µS·cm^{-1}, determined at 25 °C by an in-line conductivity meter (see *Purified water (0008)*).

Water, ammonium-free. *1095501.*

To 100 mL of *water R* add 0.1 mL of *sulfuric acid R*. Distil using the apparatus described for the determination of *Distillation range* (*2.2.11*). Reject the first 10 mL and collect the following 50 mL.

Water, carbon dioxide-free. *1095502.*

Water R which has been boiled for a few minutes and protected from the atmosphere during cooling and storage or deionised *water R* with a resistivity of not less than 0.18 MΩ·m.

Water for chromatography. *1095503.*

Deionised *water R* with a resistivity of not less than 0.18 MΩ·m.

Water, distilled. *1095504.*

Water R prepared by distillation.

Water, distilled, deionised. *1095508.*

Deionised *water R* prepared by distillation with a resistivity of not less than 0.18 MΩ·m.

Water for injections. *1095505.*

See *Water for injections (0169)*.

Water, nitrate-free. *1095506.*

To 100 mL of *water R* add a few milligrams of *potassium permanganate R* and of *barium hydroxide R*. Distil using the apparatus described for the determination of *Distillation range* (*2.2.11*). Reject the first 10 mL and collect the following 50 mL.

Water, particle-free. *1095507.*

Filter *water R* through a membrane with a pore size of 0.22 µm.

Weak cationic resin. *1096000.*

Polymethacrylic resin, slightly acid, with carboxyl groups present in a protonated form.

Particle size: 75 µm to 160 µm.

pH limits of use: 5 to 14.

Maximum temperature of use: 120 °C.

Wedelolactone. $C_{16}H_{10}O_7$. (M_r 314.3). *1187300.* [524-12-9]. 1,8,9-Trihydroxy-3-methoxy-6*H*-benzofuro[3,2-*c*][1]benzopyran-6-one.

Xanthydrol. $C_{13}H_{10}O_2$. (M_r 198.2). *1096100.* [90-46-0]. 9-Xanthenol.

Content: minimum 90.0 per cent.

White or pale-yellow powder, very slightly soluble in water, soluble in ethanol (96 per cent) and in glacial acetic acid.

It is also available as a methanolic solution containing 90 g/L to 110 g/L of xanthydrol.

mp: about 123 °C.

Assay. In a 250 mL flask dissolve 0.300 g in 3 mL of *methanol R* or use 3.0 mL of solution. Add 50 mL of *glacial acetic acid R* and, dropwise with shaking, 25 mL of a 20 g/L solution of *urea R*. Allow to stand for 12 h, collect the precipitate on a sintered-glass filter (16) (*2.1.2*), wash with 20 mL of *ethanol (96 per cent) R*, dry in an oven at 100 °C to 105 °C and weigh.

1 g of precipitate is equivalent to 0.9429 g of xanthydrol.

Storage: protected from light. If a methanolic solution is used, store in small sealed ampoules and filter before use if necessary.

Xanthydrol R1. *1096101.*

Complies with the requirements prescribed for *xanthydrol R* with the following requirement.

Content: minimum 98.0 per cent of $C_{13}H_{10}O_2$.

Xanthydrol solution. *1096102.*

To 0.1 mL of a 100 g/L solution of *xanthydrol R* in *methanol R* add 100 mL of *anhydrous acetic acid R* and 1 mL of *hydrochloric acid R*. Allow to stand for 24 h before using.

Xylene. C_8H_{10}. (M_r 106.2). *1096200.* [1330-20-7].

Mixture of isomers. Clear, colourless, flammable liquid, practically insoluble in water, miscible with ethanol (96 per cent).

d_{20}^{20}: about 0.867.

n_D^{20}: about 1.497.

bp: about 138 °C.

***m*-Xylene.** C_8H_{10}. (M_r 106.2). *1117700.* [108-38-3]. 1,3-Dimethylbenzene.

Clear, colourless, flammable liquid, practically insoluble in water, miscible with ethanol (96 per cent).

d_{20}^{20}: about 0.884.

n_D^{20}: about 1.497.

bp: about 139 °C.

mp: about – 47 °C.

***o*-Xylene.** C_8H_{10}. (M_r 106.2). *1100600.* [95-47-6]. 1,2-Dimethylbenzene.

Clear, colourless, flammable liquid, practically insoluble in water, miscible with ethanol (96 per cent).

d_{20}^{20}: about 0.881.

n_D^{20}: about 1.505.

bp: about 144 °C.

mp: about – 25 °C.

Xylenol orange. $C_{31}H_{28}N_2Na_4O_{13}S$. ($M_r$ 761). *1096300.* [3618-43-7]. Tetrasodium 3,3′-(3*H*-2,1-benzoxathiol-3-ylidene)bis[(6-hydroxy-5-methyl-3,1-phenylene)methyleneiminobisacetate] *S,S*-dioxide.

Reddish-brown crystalline powder, soluble in water.

Xylenol orange triturate. *1096301.*

Triturate 1 part of *xylenol orange R* with 99 parts of *potassium nitrate R*.

Test for sensitivity. To 50 mL of *water R* add 1 mL of *dilute acetic acid R*, 50 mg of the xylenol orange triturate and 0.05 mL of *lead nitrate solution R*. Add *hexamethylenetetramine R* until the colour changes from yellow to violet-red. After addition of 0.1 mL of *0.1 M sodium edetate* the colour changes to yellow.

Xylose. *1096400.* [58-86-6].

See *Xylose (1278)*.

Zinc. Zn. (A_r 65.4). *1096500.* [7440-66-6].

Content: minimum 99.5 per cent.

Silver-white cylinders, granules, pellets or filings with a blue sheen.

Arsenic (*2.4.2, Method A*): maximum 0.2 ppm.

Dissolve 5.0 g in a mixture of the 15 mL of *hydrochloric acid R* and 25 mL of *water R* prescribed.

Zinc, activated. *1096501.*

Place the zinc cylinders or pellets to be activated in a conical flask and add a sufficient quantity of a 50 ppm solution of *chloroplatinic acid R* to cover the metal. Allow the metal to remain in contact with the solution for 10 min, wash, drain and dry immediately.

Arsenic (*2.4.2, Method A*). To 5 g of the activated zinc add 15 mL of *hydrochloric acid R*, 25 mL of *water R*, 0.1 mL of *stannous chloride solution R* and 5 mL of *potassium iodide solution R*. No stain is produced on the *mercuric bromide paper R*.

Activity. Repeat the test for arsenic using the same reagents and adding a solution containing 1 µg of arsenic. An appreciable stain appears on the *mercuric bromide paper R*.

Zinc acetate. $(C_2H_3O_2)_2Zn,2H_2O$. (M_r 219.5). *1102300.* [5970-45-6]. Zinc acetate dihydrate.

Bright white or almost white crystals, slightly efflorescent, freely soluble in water, soluble in ethanol (96 per cent). It loses its crystallisation water at 100 °C.

d_{20}^{20}: about 1.735.

mp: about 237 °C.

Zinc acetate solution. *1102301.*

Mix 600 mL of *water R* with 150 mL of *glacial acetic acid R*, 54.9 g of *zinc acetate R* and stir to dissolve. Continue stirring while adding 150 mL of *concentrated ammonia R*. Cool to room temperature and adjust with *ammonia R* to pH 6.4. Dilute the mixture to 1 L with *water R*.

Zinc chloride. *1096600.* [7646-85-7].

See *Zinc chloride (0110)*.

Zinc chloride-formic acid solution. *1096601.*

Dissolve 20 g of *zinc chloride R* in 80 g of an 850 g/L solution of *anhydrous formic acid R*.

Zinc chloride solution, iodinated. *1096602.*

Dissolve 20 g of *zinc chloride R* and 6.5 g of *potassium iodide R* in 10.5 mL of *water R*. Add 0.5 g of *iodine R* and shake for 15 min. Filter if necessary.

Storage: protected from light.

Zinc iodide and starch solution. *1096502.*

To a solution of 2 g of *zinc chloride R* in 10 mL of *water R* add 0.4 g of *soluble starch R* and heat until the starch has dissolved. After cooling to room temperature add 1.0 mL of a colourless solution containing 0.10 g *zinc R* as filings and 0.2 g of *iodine R* in *water R*. Dilute the solution to 100 mL with *water R* and filter.

Storage: protected from light.

Test for sensitivity. Dilute 0.05 mL of *sodium nitrite solution R* to 50 mL with *water R*. To 5 mL of this solution add 0.1 mL of *dilute sulfuric acid R* and 0.05 mL of the zinc iodide and starch solution and mix. The solution becomes blue.

Zinc oxide. *1096700.* [1314-13-2].

See *Zinc oxide (0252)*.

Zinc powder. Zn. (A_r 65.4). *1096800.* [7440-66-6].

Content: minimum 90.0 per cent.

Very fine, grey powder, soluble in *dilute hydrochloric acid R*.

Zinc sulfate. *1097000.* [7446-20-0].

See *Zinc sulfate (0111)*.

Zirconyl chloride. A basic salt corresponding approximately to the formula $ZrCl_2O$, $8H_2O$. *1097100.* [15461-27-5].

Content: minimum 96.0 per cent of $ZrCl_2O,8H_2O$.

White or almost white, crystalline powder or crystals, freely soluble in water and in ethanol (96 per cent).

Assay. Dissolve 0.600 g in a mixture of 5 mL of *nitric acid R* and 50 mL of *water R*. Add 50.0 mL of *0.1 M silver nitrate* and 3 mL of *dibutyl phthalate R* and shake. Using 2 mL of *ferric ammonium sulfate solution R2* as indicator, titrate with *0.1 M ammonium thiocyanate* until a reddish-yellow colour is obtained.

1 mL of *0.1 M silver nitrate* is equivalent to 16.11 mg of $ZrCl_2O,8H_2O$.

Zirconyl nitrate. A basic salt corresponding approximately to the formula $ZrO(NO_3)_2,2H_2O$. *1097200.* [14985-18-3].

A white or almost white powder or crystals, hygroscopic, soluble in water. The aqueous solution is a clear or at most slightly opalescent liquid.

Storage: in an airtight container.

Zirconyl nitrate solution. *1097201.*

A 1 g/L solution in a mixture of 40 mL of *water R* and 60 mL of *hydrochloric acid R*.

04/2010:40102

4.1.2. STANDARD SOLUTIONS FOR LIMIT TESTS

Acetaldehyde standard solution (100 ppm C_2H_4O). *5000100.*

Dissolve 1.0 g of *acetaldehyde R* in *2-propanol R* and dilute to 100.0 mL with the same solvent. Dilute 5.0 mL of the solution to 500.0 mL with *2-propanol R*. Prepare immediately before use.

Acetaldehyde standard solution (100 ppm C_2H_4O) R1. *5000101.*

Dissolve 1.0 g of *acetaldehyde R* in *water R* and dilute to 100.0 mL with the same solvent. Dilute 5.0 mL of the solution to 500.0 mL with *water R*. Prepare immediately before use.

Aluminium standard solution (200 ppm Al). *5000200.*

Dissolve in *water R* a quantity of *aluminium potassium sulfate R* equivalent to 0.352 g of $AlK(SO_4)_2,12H_2O$. Add 10 mL of *dilute sulfuric acid R* and dilute to 100.0 mL with *water R*.

Aluminium standard solution (100 ppm Al). *5000203.*

Immediately before use, dilute with *water R* to 10 times its volume a solution containing 8.947 g of *aluminium chloride R* in 1000.0 mL of *water R*.

Aluminium standard solution (10 ppm Al). *5000201.*

Immediately before use, dilute with *water R* to 100 times its volume in a solution containing *aluminium nitrate R* equivalent to 1.39 g of $Al(NO_3)_3,9H_2O$ in 100.0 mL.

Aluminium standard solution (2 ppm Al). *5000202.*

Immediately before use, dilute with *water R* to 100 times its volume a solution containing *aluminium potassium sulfate R* equivalent to 0.352 g of $AlK(SO_4)_2,12H_2O$ and 10 mL of *dilute sulfuric acid R* in 100.0 mL.

Ammonium standard solution (100 ppm NH_4). *5000300.*

Immediately before use, dilute to 25 mL with *water R* 10 mL of a solution containing *ammonium chloride R* equivalent to 0.741 g of NH_4Cl in 1000 mL.

Ammonium standard solution (3 ppm NH_4). *5006100.*

Immediately before use, dilute with *water R* to 100 times its volume a solution containing *ammonium chloride R* equivalent to 0.889 g of NH_4Cl in 1000.0 mL.

Ammonium standard solution (2.5 ppm NH_4). *5000301.*

Immediately before use, dilute with *water R* to 100 times its volume a solution containing *ammonium chloride R* equivalent to 0.741 g of NH_4Cl in 1000.0 mL.

Ammonium standard solution (1 ppm NH_4). *5000302.*

Immediately before use, dilute *ammonium standard solution (2.5 ppm NH_4) R* to 2.5 times its volume with *water R*.

Antimony standard solution (100 ppm Sb). *5000401.*

Dissolve *antimony potassium tartrate R* equivalent to 0.274 g of $C_4H_4KO_7Sb,½H_2O$ in 500 mL of *1 M hydrochloric acid* and dilute the clear solution to 1000 mL with *water R*.

Antimony standard solution (1 ppm Sb). *5000400.*

Dissolve *antimony potassium tartrate R* equivalent to 0.274 g of $C_4H_4KO_7Sb,{}^1/_2H_2O$ in 20 mL of *hydrochloric acid R1* and dilute the clear solution to 100.0 mL with *water R*. To 10.0 mL of this solution add 200 mL of *hydrochloric acid R1* and dilute to 1000.0 mL with *water R*. To 100.0 mL of this solution add 300 mL of *hydrochloric acid R1* and dilute to 1000.0 mL with *water R*. Prepare the dilute solutions immediately before use.

Arsenic standard solution (10 ppm As). *5000500.*

Immediately before use, dilute with *water R* to 100 times its volume a solution prepared by dissolving *arsenious trioxide R* equivalent to 0.330 g of As_2O_3 in 5 mL of *dilute sodium hydroxide solution R* and diluting to 250.0 mL with *water R*.

Arsenic standard solution (1 ppm As). *5000501.*

Immediately before use, dilute *arsenic standard solution (10 ppm As) R* to 10 times its volume with *water R*.

Arsenic standard solution (0.1 ppm As). *5000502.*

Immediately before use, dilute *arsenic standard solution (1 ppm As) R* to 10 times its volume with *water R*.

Barium standard solution (0.1 per cent Ba). *5000601.*

Dissolve *barium chloride R* equivalent to 0.178 g of $BaCl_2,2H_2O$ in *distilled water R* and dilute to 100.0 mL with the same solvent.

Barium standard solution (50 ppm Ba). *5000600.*

Immediately before use, dilute with *distilled water R* to 20 times its volume a solution in *distilled water R* containing *barium chloride R* equivalent to 0.178 g of $BaCl_2,2H_2O$ in 100.0 mL.

Barium standard solution (2 ppm Ba). *5005600.*

Immediately before use, dilute *barium standard solution (50 ppm Ba) R* to 25 times its volume with *distilled water R*.

Bismuth standard solution (100 ppm Bi). *5005300.*

Dissolve *bismuth R* equivalent to 0.500 g of Bi in 50 mL of *nitric acid R* and dilute to 500.0 mL with *water R*. Dilute the solution to 10 times its volume with *dilute nitric acid R* immediately before use.

Cadmium standard solution (0.1 per cent Cd). *5000700.*

Dissolve *cadmium R* equivalent to 0.100 g of Cd in the smallest necessary amount of a mixture of equal volumes of *hydrochloric acid R* and *water R* and dilute to 100.0 mL with a 1 per cent *V/V* solution of *hydrochloric acid R*.

Cadmium standard solution (10 ppm Cd) . *5000701.*

Immediately before use, dilute *cadmium standard solution (0.1 per cent Cd) R* to 100 times its volume with a 1 per cent *V/V* solution of *hydrochloric acid R*.

Calcium standard solution (400 ppm Ca). *5000800.*

Immediately before use, dilute with *distilled water R* to 10 times its volume a solution in *distilled water R* containing *calcium carbonate R* equivalent to 1.000 g of $CaCO_3$ and 23 mL of *1 M hydrochloric acid* in 100.0 mL.

Calcium standard solution (100 ppm Ca). *5000801.*

Immediately before use, dilute with *distilled water R* to 10 times its volume a solution in *distilled water R* containing *calcium carbonate R* equivalent to 0.624 g of $CaCO_3$ and 3 mL of *acetic acid R* in 250.0 mL.

Calcium standard solution (100 ppm Ca) R1. *5000804.*

Immediately before use, dilute with *water R* to 10 times its volume a solution containing *anhydrous calcium chloride R* equivalent to 2.769 g of $CaCl_2$ in 1000.0 mL of *dilute hydrochloric acid R*.

Calcium standard solution (100 ppm Ca), alcoholic. *5000802.*

Immediately before use, dilute with *ethanol (96 per cent) R* to 10 times its volume a solution in *distilled water R* containing *calcium carbonate R* equivalent to 2.50 g of $CaCO_3$ and 12 mL of *acetic acid R* in 1000.0 mL.

Calcium standard solution (10 ppm Ca). *5000803.*

Immediately before use, dilute with *distilled water R* to 100 times its volume a solution in *distilled water R* containing *calcium carbonate R* equivalent to 0.624 g of $CaCO_3$ and 3 mL of *acetic acid R* in 250.0 mL.

Chloride standard solution (50 ppm Cl). *5004100.*

Immediately before use, dilute with *water R* to 10 times its volume a solution containing *sodium chloride R* equivalent to 0.824 g of NaCl in 1000.0 mL.

Chloride standard solution (8 ppm Cl). *5000900.*

Immediately before use, dilute with *water R* to 100 times its volume a solution containing *sodium chloride R* equivalent to 1.32 g of NaCl in 1000.0 mL.

Chloride standard solution (5 ppm Cl). *5000901.*

Immediately before use, dilute with *water R* to 100 times its volume a solution containing *sodium chloride R* equivalent to 0.824 g of NaCl in 1000.0 mL.

Chromium liposoluble standard solution (1000 ppm Cr). *5004600.*

A chromium (metal) organic compound in an oil.

Chromium standard solution (0.1 per cent Cr). *5001002.*

Dissolve *potassium dichromate R* equivalent to 2.83 g of $K_2Cr_2O_7$ in *water R* and dilute to 1000.0 mL with the same solvent.

Chromium standard solution (100 ppm Cr). *5001000.*

Dissolve *potassium dichromate R* equivalent to 0.283 g of $K_2Cr_2O_7$ in *water R* and dilute to 1000.0 mL with the same solvent.

Chromium standard solution (0.1 ppm Cr). *5001001.*

Immediately before use, dilute *chromium standard solution (100 ppm Cr) R* to 1000 times its volume with *water R*.

Cobalt standard solution (100 ppm Co). *5004300.*

Dissolve *cobalt nitrate R* equivalent to 0.494 g of $Co(NO_3)_2,6H_2O$ in 500 mL of *1 M nitric acid* and dilute the clear solution to 1000 mL with *water R*.

Copper liposoluble standard solution (1000 ppm Cu). *5004700.*

A copper (metal) organic compound in an oil.

Copper standard solution (0.1 per cent Cu). *5001100.*

Dissolve *copper sulfate R* equivalent to 0.393 g of $CuSO_4,5H_2O$ in *water R* and dilute to 100.0 mL with the same solvent.

Copper standard solution (10 ppm Cu). *5001101.*

Immediately before use, dilute *copper standard solution (0.1 per cent Cu) R* to 100 times its volume with *water R*.

Copper standard solution (0.1 ppm Cu). *5001102.*

Immediately before use, dilute *copper standard solution (10 ppm Cu) R* to 100 times its volume with *water R*.

Ferrocyanide standard solution (100 ppm $Fe(CN)_6$). *5001200.*

Immediately before use, dilute with *water R* to 10 times its volume a solution containing *potassium ferrocyanide R* equivalent to 0.20 g of $K_4Fe(CN)_6,3H_2O$ in 100.0 mL.

Ferricyanide standard solution (50 ppm $Fe(CN)_6$). *5001300.*

Immediately before use, dilute with *water R* to 100 times its volume a solution containing *potassium ferricyanide R* equivalent to 0.78 g of $K_3Fe(CN)_6$ in 100.0 mL.

Fluoride standard solution (10 ppm F). *5001400.*

Dissolve in *water R sodium fluoride R* previously dried at 300 °C for 12 h, equivalent to 0.442 g of NaF, and dilute to 1000.0 mL with the same solvent (1 mL = 0.2 mg F). Store in a polyethylene container. Immediately before use, dilute the solution to 20 times its volume with *water R*.

Fluoride standard solution (1 ppm F). *5001401.*

Immediately before use, dilute *fluoride standard solution (10 ppm F) R* to 10 times its volume with *water R*.

Formaldehyde standard solution (5 ppm CH_2O). *5001500.*

Immediately before use, dilute with *water R* to 200 times its volume a solution containing 1.0 g of CH_2O per litre prepared from *formaldehyde solution R*.

Germanium standard solution (100 ppm Ge). *5004400.*

Dissolve *ammonium hexafluorogermanate(IV) R* equivalent to 0.307 g of $(NH_4)_2GeF_6$ in a 0.01 per cent *V/V* solution of *hydrofluoric acid R*. Dilute the clear solution to 1000 mL with *water R*.

Glyoxal standard solution (20 ppm $C_2H_2O_2$). *5003700.*

In a 100 mL graduated flask weigh a quantity of *glyoxal solution R* corresponding to 0.200 g of $C_2H_2O_2$ and make up to volume with *anhydrous ethanol R*. Immediately before use dilute the solution to 100 times its volume with the same solvent.

Glyoxal standard solution (2 ppm $C_2H_2O_2$). *5003701.*

Immediately before use, dilute *glyoxal standard solution (20 ppm $C_2H_2O_2$) R* to 10 times its volume with *anhydrous ethanol R*.

Hydrogen peroxide standard solution (10 ppm H_2O_2). *5005200.*

Dilute 10.0 mL of *dilute hydrogen peroxide solution R* to 300.0 mL with *water R*. Dilute 10.0 mL of this solution to 1000.0 mL with *water R*. Prepare immediately before use.

Iodide standard solution (10 ppm I). *5003800.*

Immediately before use, dilute with *water R* to 100 times its volume a solution containing *potassium iodide R* equivalent to 0.131 g of KI in 100.0 mL.

Iron standard solution (0.1 per cent Fe). *5001605.*

Dissolve 0.100 g of Fe in the smallest amount necessary of a mixture of equal volumes of *hydrochloric acid R* and *water R* and dilute to 100.0 mL with *water R*.

Iron standard solution (250 ppm Fe). *5001606.*

Immediately before use, dilute with *water R* to 40 times its volume a solution containing 4.840 g of *ferric chloride R* in a 150 g/L solution of *hydrochloric acid R* diluted to 100.0 mL.

Iron standard solution (20 ppm Fe). *5001600.*

Immediately before use, dilute with *water R* to 10 times its volume a solution containing *ferric ammonium sulfate R* equivalent to 0.863 g of $FeNH_4(SO_4)_2,12H_2O$ and 25 mL of *dilute sulfuric acid R* in 500.0 mL.

Iron standard solution (10 ppm Fe). *5001601.*

Immediately before use, dilute with *water R* to 100 times its volume a solution containing *ferrous ammonium sulfate R* equivalent to 7.022 g of $Fe(NH_4)_2(SO_4)_2,6H_2O$ and 25 mL of *dilute sulfuric acid R* in 1000.0 mL.

Iron standard solution (8 ppm Fe). *5001602.*

Immediately before use, dilute with *water R* to 10 times its volume a solution containing 80 mg of *iron R* and 50 mL of *hydrochloric acid R* (220 g/L HCl) in 1000.0 mL.

Iron standard solution (2 ppm Fe). *5001603.*

Immediately before use, dilute *iron standard solution (20 ppm Fe) R* to 10 times its volume with *water R*.

Iron standard solution (1 ppm Fe). *5001604.*

Immediately before use, dilute *iron standard solution (20 ppm Fe) R* to 20 times its volume with *water R*.

Lead liposoluble standard solution (1000 ppm Pb). *5004800.*

A lead (metal) organic compound in an oil.

Lead standard solution (0.1 per cent Pb). *5001700.*

Dissolve *lead nitrate R* equivalent to 0.400 g of $Pb(NO_3)_2$ in *water R* and dilute to 250.0 mL with the same solvent.

Lead standard solution (0.1 per cent Pb) R1. *5005400.*

Dissolve in *dilute lead-free nitric acid R* a quantity of *lead nitrate R* equivalent to 0.400 g of Pb $(NO_3)_2$ and dilute to 250.0 mL with the same solvent.

Lead standard solution (100 ppm Pb). *5001701.*

Immediately before use, dilute *lead standard solution (0.1 per cent Pb) R* to 10 times its volume with *water R*.

Lead standard solution (10 ppm Pb). *5001702.*

Immediately before use, dilute *lead standard solution (100 ppm Pb) R* to 10 times its volume with *water R*.

Lead standard solution (10 ppm Pb) R1. *5001706.*

Immediately before use, dilute with *water R* to 10 times its volume a solution containing 0.160 g of *lead nitrate R* in 100 mL of *water R*, to which is added 1 mL of *lead-free nitric acid R* and dilute to 1000.0 mL.

Lead standard solution (10 ppm Pb) R2. *5005401.*

Dilute *lead standard solution (0.1 per cent Pb) R1* to 100 times its volume with *dilute lead-free nitric acid R*. Use within 1 week.

Lead standard solution (2 ppm Pb). *5001703.*

Immediately before use, dilute *lead standard solution (10 ppm Pb) R* to 5 times its volume with *water R*.

Lead standard solution (1 ppm Pb). *5001704.*

Immediately before use, dilute *lead standard solution (10 ppm Pb) R* to 10 times its volume with *water R*.

Lead standard solution (0.5 ppm Pb). *5005402.*

Dilute *lead standard solution (10 ppm Pb) R2* to 20 times its volume with *dilute lead-free nitric acid R*. Use within 1 day.

Lead standard solution (0.25 ppm Pb). *5006000.*

Immediately before use, dilute *lead standard solution (1 ppm Pb) R* to 4 times its volume with *water R*.

Lead standard solution (0.1 ppm Pb). *5001705.*

Immediately before use, dilute *lead standard solution (1 ppm Pb) R* to 10 times its volume with *water R*.

Magnesium standard solution (0.1 per cent Mg). *5001803.*

Dissolve *magnesium sulfate R* equivalent to 1.010 g of $MgSO_4,7H_2O$ in *distilled water R* and dilute to 100.0 mL with the same solvent.

Magnesium standard solution (1000 ppm Mg). *5006200.*

Dissolve 5.275 g of *magnesium nitrate R* in 16 mL of *dilute nitric acid R* and dilute to 500.0 mL with *water R*.

Standardisation: carry out the determination of magnesium by complexometry (*2.5.11*).

Magnesium standard solution (100 ppm Mg). *5001800.*

Immediately before use, dilute with *water R* to 10 times its volume a solution containing *magnesium sulfate R* equivalent to 1.010 g of $MgSO_4,7H_2O$ in 100.0 mL.

Magnesium standard solution (10 ppm Mg). *5001801.*

Immediately before use, dilute *magnesium standard solution (100 ppm Mg) R* to 10 times its volume with *water R*.

Magnesium standard solution (10 ppm Mg) R1. *5001802.*

Immediately before use, dilute with *water R* to 100 times its volume a solution containing 8.365 g of *magnesium chloride R* in 1000.0 mL of *dilute hydrochloric acid R*.

Manganese standard solution (1000 ppm Mn). *5005800.*

Dissolve *manganese sulfate R* equivalent to 3.08 g of $MnSO_4,H_2O$ in 500 mL of *1 M nitric acid* and dilute the solution to 1000 mL with *water R*.

Manganese standard solution (100 ppm Mn). *5004500.*

Dissolve *manganese sulfate R* equivalent to 0.308 g of $MnSO_4,H_2O$ in 500 mL of *1 M nitric acid* and dilute the clear solution to 1000 mL with *water R*.

Mercury standard solution (1000 ppm Hg). *5001900.*

Dissolve *mercuric chloride R* equivalent to 1.354 g of $HgCl_2$ in 50 mL of *dilute nitric acid R* and dilute to 1000.0 mL with *water R*.

Mercury standard solution (10 ppm Hg). *5001901.*

Immediately before use, dilute with water to 100 times its volume a solution containing *mercuric chloride R* equivalent to 0.338 g of $HgCl_2$ in 250.0 mL.

Nickel liposoluble standard solution (1000 ppm Ni). *5004900.*

A nickel (metal) organic compound in an oil.

Nickel standard solution (10 ppm Ni). *5002000.*

Immediately before use, dilute with *water R* to 100 times its volume a solution containing *nickel sulfate R* equivalent to 4.78 g of $NiSO_4,7H_2O$ in 1000.0 mL.

Nickel standard solution (5 ppm Ni). *5005900.*

Immediately before use dilute *nickel standard solution (10 ppm Ni) R* to twice its volume with *water for chromatography R*.

Nickel standard solution (0.2 ppm Ni). *5002002.*

Immediately before use, dilute *nickel standard solution (10 ppm Ni) R* to 50 times its volume with *water R*.

Nickel standard solution (0.1 ppm Ni). *5002001.*

Immediately before use, dilute *nickel standard solution (10 ppm Ni) R* to 100 times its volume with *water R*.

Nitrate standard solution (100 ppm NO_3). *5002100.*

Immediately before use, dilute with *water R* to 10 times its volume a solution containing *potassium nitrate R* equivalent to 0.815 g of KNO_3 in 500.0 mL.

Nitrate standard solution (10 ppm NO_3). *5002101.*

Immediately before use, dilute *nitrate standard solution (100 ppm NO_3) R* to 10 times its volume with *water R*.

Nitrate standard solution (2 ppm NO_3). *5002102.*

Immediately before use, dilute *nitrate standard solution (10 ppm NO_3) R* to 5 times its volume with *water R*.

Palladium standard solution (500 ppm Pd). *5003600.*

Dissolve 50.0 mg of *palladium R* in 9 mL of *hydrochloric acid R* and dilute to 100.0 mL with *water R*.

Palladium standard solution (20 ppm Pd). *5003602.*

Dissolve 0.333 g of *palladium chloride R* in 2 mL of warm *hydrochloric acid R*. Dilute the solution to 1000.0 mL with a mixture of equal volumes of *dilute hydrochloric acid R* and *water R*. Immediately before use dilute to 10 times its volume with *water R*.

Palladium standard solution (0.5 ppm Pd). *5003601.*

Dilute 1 mL of *palladium standard solution (500 ppm Pd) R* to 1000 mL with a mixture of 0.3 volumes of *nitric acid R* and 99.7 volumes of *water R*.

Phosphate standard solution (200 ppm PO_4). *5004200.*

Dissolve *potassium dihydrogen phosphate R* equivalent to 0.286 g of KH_2PO_4 in *water R* and dilute to 1000.0 mL with the same solvent.

Phosphate standard solution (5 ppm PO_4). *5002200.*

Immediately before use, dilute with *water R* to 100 times its volume a solution containing *potassium dihydrogen phosphate R* equivalent to 0.716 g of KH_2PO_4 in 1000.0 mL.

Platinum standard solution (30 ppm Pt). *5002300.*

Immediately before use, dilute with *1 M hydrochloric acid* to 10 times its volume a solution containing 80 mg of *chloroplatinic acid R* in 100.0 mL of *1 M hydrochloric acid*.

Potassium standard solution (0.2 per cent K). *5002402.*

Dissolve *dipotassium sulfate R* equivalent to 0.446 g of K_2SO_4 in *distilled water R* and dilute to 100.0 mL with the same solvent.

Potassium standard solution (600 ppm K). *5005100.*

Immediately before use, dilute with *water R* to 20 times its volume a solution containing *dipotassium sulfate R* equivalent to 2.676 g of K_2SO_4 in 100.0 mL.

Potassium standard solution (100 ppm K). *5002400.*

Immediately before use, dilute with *water R* to 20 times its volume a solution containing *dipotassium sulfate R* equivalent to 0.446 g of K_2SO_4 in 100.0 mL.

Potassium standard solution (20 ppm K). *5002401.*

Immediately before use, dilute *potassium standard solution (100 ppm K) R* to 5 times its volume with *water R*.

Selenium standard solution (100 ppm Se). *5002500.*

Dissolve 0.100 g of *selenium R* in 2 mL of *nitric acid R*. Evaporate to dryness. Take up the residue in 2 mL of *water R* and evaporate to dryness; carry out three times. Dissolve the residue in 50 mL of *dilute hydrochloric acid R* and dilute to 1000.0 mL with the same acid.

Selenium standard solution (1 ppm Se). *5002501.*

Immediately before use, dilute with *water R* to 40 times its volume a solution containing *selenious acid R* equivalent to 6.54 mg of H_2SeO_3 in 100.0 mL.

Silver standard solution (5 ppm Ag). *5002600.*

Immediately before use, dilute with *water R* to 100 times its volume a solution containing *silver nitrate R* equivalent to 0.790 g of $AgNO_3$ in 1000.0 mL.

Sodium standard solution (1000 ppm Na). *5005700.*

Dissolve a quantity of *anhydrous sodium carbonate R* equivalent to 2.305 g of Na_2CO_3 in a mixture of 25 mL of *water R* and 25 mL of *nitric acid R* and dilute to 1000.0 mL with *water R*.

Sodium standard solution (200 ppm Na). *5002700.*

Immediately before use, dilute with *water R* to 10 times its volume a solution containing *sodium chloride R* equivalent to 0.509 g of NaCl in 100.0 mL.

Sodium standard solution (50 ppm Na). *5002701.*

Dilute the *sodium standard solution (200 ppm Na) R* to four times its volume with *water R*.

Strontium standard solution (1.0 per cent Sr). *5003900.*

Cover with *water R*, *strontium carbonate R* equivalent to 1.6849 g of $SrCO_3$. Cautiously add *hydrochloric acid R* until all the solid has dissolved and there is no sign of further effervescence. Dilute to 100.0 mL with *water R*.

Sulfate standard solution (100 ppm SO_4). *5002802.*

Immediately before use, dilute with *distilled water R* to 10 times its volume a solution in *distilled water R* containing *dipotassium sulfate R* equivalent to 0.181 g of K_2SO_4 in 100.0 mL.

Sulfate standard solution (10 ppm SO_4). *5002800.*

Immediately before use, dilute with *distilled water R* to 100 times its volume a solution in *distilled water R* containing *dipotassium sulfate R* equivalent to 0.181 g of K_2SO_4 in 100.0 mL.

Sulfate standard solution (10 ppm SO_4) R1. *5002801.*

Immediately before use, dilute with *ethanol (30 per cent V/V) R* to 100 times its volume a solution containing *dipotassium sulfate R* equivalent to 0.181 g of K_2SO_4 in 100.0 mL of *ethanol (30 per cent V/V) R*.

Sulfite standard solution (80 ppm SO_2). *5005500.*

Dissolve 3.150 g of *anhydrous sodium sulfite R* in freshly prepared *distilled water R* and dilute to 100.0 mL with the same solvent. Dilute 0.5 mL to 100.0 mL with freshly prepared *distilled water R*.

Sulfite standard solution (1.5 ppm SO_2). *5002900.*

Dissolve *sodium metabisulfite R* equivalent to 0.152 g of $Na_2S_2O_5$ in *water R* and dilute to 100.0 mL with the same solvent. Dilute 5.0 mL of this solution to 100.0 mL with *water R*. To 3.0 mL of the resulting solution, add 4.0 mL of *0.1 M sodium hydroxide* and dilute to 100.0 mL with *water R*.

Thallium standard solution (10 ppm Tl). *5003000.*

Dissolve *thallous sulfate R* equivalent to 0.1235 g of Tl_2SO_4 in a 9 g/L solution of *sodium chloride R* and dilute to 1000.0 mL with the same solution. Dilute 10.0 mL of the solution to 100.0 mL with the 9 g/L solution of *sodium chloride R*.

Tin liposoluble standard solution (1000 ppm Sn). *5005000.*

A tin (metal) organic compound in an oil.

Tin standard solution (5 ppm Sn). *5003100.*

Dissolve *tin R* equivalent to 0.500 g of Sn in a mixture of 5 mL of *water R* and 25 mL of *hydrochloric acid R* and dilute to 1000.0 mL with *water R*. Dilute the solution to 100 times its volume with a 2.5 per cent *V/V* solution of *hydrochloric acid R* immediately before use.

Tin standard solution (0.1 ppm Sn). *5003101.*

Immediately before use, dilute *tin standard solution (5 ppm Sn) R* to 50 times its volume with *water R*.

Titanium standard solution (100 ppm Ti). *5003200.*

Dissolve 100.0 mg of *titanium R* in 100 mL of *hydrochloric acid R* diluted to 150 mL with *water R*, heating if necessary. Allow to cool and dilute to 1000 mL with *water R*.

Vanadium standard solution (1 g/L V). *5003300.*

Dissolve in *water R ammonium vanadate R* equivalent to 0.230 g of NH_4VO_3 and dilute to 100.0 mL with the same solvent.

Zinc standard solution (5 mg/mL Zn). *5003400.*

Dissolve 3.15 g of *zinc oxide R* in 15 mL of *hydrochloric acid R* and dilute to 500.0 mL with *water R*.

Zinc standard solution (100 ppm Zn). *5003401.*

Immediately before use, dilute with *water R* to 10 times its volume a solution containing *zinc sulfate R* equivalent to 0.440 g of $ZnSO_4,7H_2O$ and 1 mL of *acetic acid R* in 100.0 mL.

Zinc standard solution (10 ppm Zn). *5003402.*

Immediately before use, dilute *zinc standard solution (100 ppm Zn) R* to 10 times its volume with *water R*.

Zinc standard solution (5 ppm Zn). *5003403.*

Immediately before use, dilute *zinc standard solution (100 ppm Zn) R* to 20 times its volume with *water R*.

Zirconium standard solution (1 g/L Zr). *5003500.*

Dissolve *zirconyl nitrate R* equivalent to 0.293 g of $ZrO(NO_3)_2,2H_2O$ in a mixture of 2 volumes of *hydrochloric acid R* and 8 volumes of *water R* and dilute to 100.0 mL with the same mixture of solvents.

01/2014:40103

4.1.3. BUFFER SOLUTIONS

Buffered acetone solution. *4000100.*

Dissolve 8.15 g of *sodium acetate R* and 42 g of *sodium chloride R* in *water R*, add 68 mL of *0.1 M hydrochloric acid* and 150 mL of *acetone R* and dilute to 500 mL with *water R*.

Buffer solution pH 2.0. *4000200.*

Dissolve 6.57 g of *potassium chloride R* in *water R* and add 119.0 mL of *0.1 M hydrochloric acid*. Dilute to 1000.0 mL with *water R*.

Phosphate buffer solution pH 2.0. *4007900.*

Dissolve 8.95 g of *disodium hydrogen phosphate R* and 3.40 g of *potassium dihydrogen phosphate R* in *water R* and dilute to 1000.0 mL with the same solvent. If necessary adjust the pH with *phosphoric acid R*.

Sulfate buffer solution pH 2.0. *4008900.*

Dissolve 132.1 g of *ammonium sulfate R* in *water R* and dilute to 500.0 mL with the same solvent (Solution A). Carefully and with constant cooling stir 14 mL of sulfuric acid R into about 400 mL of *water R*; allow to cool and dilute to 500.0 mL with *water R* (Solution B). Mix equal volumes of solutions A and B. Adjust the pH if necessary.

Buffer solution pH 2.2. *4010500.*

Mix 6.7 mL of *phosphoric acid R* with 55.0 mL of a 40 g/L solution of *sodium hydroxide R* and dilute to 1000.0 mL with *water R*.

Buffer solution pH 2.5. *4000300.*

Dissolve 100 g of *potassium dihydrogen phosphate R* in 800 mL of *water R*; adjust to pH 2.5 with *hydrochloric acid R* and dilute to 1000.0 mL with *water R*.

Buffer solution pH 2.5 R1. *4000400.*

To 4.9 g of *dilute phosphoric acid R* add 250 mL of *water R*. Adjust the pH with *dilute sodium hydroxide solution R* and dilute to 500.0 mL with *water R*.

0.2 M Phosphate buffer solution pH 2.5. *4014100.*

Dissolve 27.2 g of *potassium dihydrogen phosphate R* in about 900 mL of *water R*, adjust to pH 2.5 with *phosphoric acid R* and dilute to 1.0 L with *water R*.

Phosphate buffer solution pH 2.8. *4010600.*

Dissolve 7.8 g of *sodium dihydrogen phosphate R* in 900 mL of *water R*, adjust to pH 2.8 with *phosphoric acid R* and dilute to 1000 mL with the same solvent.

Buffer solution pH 3.0. *4008000.*

Dissolve 21.0 g of *citric acid R* in 200 mL of *1 M sodium hydroxide* and dilute to 1000 mL with *water R*. Dilute 40.3 mL of this solution to 100.0 mL with *0.1 M hydrochloric acid*.

0.25 M Citrate buffer solution pH 3.0. *4012600.*

Dissolve 5.3 g of *citric acid R* in 80 mL of *water R*. Adjust the pH with *1 M sodium hydroxide* and dilute to 100.0 mL with *water R*.

0.1 M Phosphate buffer solution pH 3.0. *4011500.*

Dissolve 12.0 g of *anhydrous sodium dihydrogen phosphate R* in *water R*, adjust the pH with *dilute phosphoric acid R1* and dilute to 1000 mL with *water R*.

Phosphate buffer solution pH 3.0. *4000500.*

Mix 0.7 mL of *phosphoric acid R* with 100 mL of *water R*. Dilute to 900 mL with the same solvent. Adjust to pH 3.0 with *strong sodium hydroxide solution R* and dilute to 1000 mL with *water R*.

Phosphate buffer solution pH 3.0 R1. *4010000.*

Dissolve 3.40 g of *potassium dihydrogen phosphate R* in 900 mL of *water R*. Adjust to pH 3.0 with *phosphoric acid R* and dilute to 1000.0 mL with *water R*.

Phosphate buffer solution pH 3.2. *4008100.*

To 900 mL of a 4 g/L solution of *sodium dihydrogen phosphate R*, add 100 mL of a 2.5 g/L solution of *phosphoric acid R*. Adjust the pH if necessary.

Phosphate buffer solution pH 3.2 R1. *4008500.*

Adjust a 35.8 g/L solution of *disodium hydrogen phosphate R* to pH 3.2 with *dilute phosphoric acid R*. Dilute 100.0 mL of the solution to 2000.0 mL with *water R*.

Buffer solution pH 3.5. *4000600.*

Dissolve 25.0 g of *ammonium acetate R* in 25 mL of *water R* and add 38.0 mL of *hydrochloric acid R1*. Adjust the pH if necessary with *dilute hydrochloric acid R* or *dilute ammonia R1*. Dilute to 100.0 mL with *water R*.

Phosphate buffer solution pH 3.5. *4000700.*

Dissolve 68.0 g of *potassium dihydrogen phosphate R* in *water R* and dilute to 1000.0 mL with the same solvent. Adjust the pH with *phosphoric acid R*.

Buffer solution pH 3.6. *4000800.*

To 250.0 mL of *0.2 M potassium hydrogen phthalate R* add 11.94 mL of *0.2 M hydrochloric acid*. Dilute to 1000.0 mL with *water R*.

Buffer solution pH 3.7. *4000900.*

To 15.0 mL of *acetic acid R* add 60 mL of *ethanol (96 per cent) R* and 20 mL of *water R*. Adjust to pH 3.7 by the addition of *ammonia R*. Dilute to 100.0 mL with *water R*.

Buffered copper sulfate solution pH 4.0. *4001000.*

Dissolve 0.25 g of *copper sulfate R* and 4.5 g of *ammonium acetate R* in *dilute acetic acid R* and dilute to 100.0 mL with the same solvent.

0.1 M Sodium acetate buffer solution pH 4.0. *4013800.*

Dissolve 822 mg of *sodium acetate R* in 100 mL of *water R* (solution A). Dilute 1.44 mL of *glacial acetic acid R* in 250 mL of *water R* (solution B). Titrate 100 mL of solution B using about 20 mL of solution A.

Acetate buffer solution pH 4.4. *4001100.*

Dissolve 136 g of *sodium acetate R* and 77 g of *ammonium acetate R* in *water R* and dilute to 1000.0 mL with the same solvent; add 250.0 mL of *glacial acetic acid R* and mix.

Phthalate buffer solution pH 4.4. *4001200.*

Dissolve 2.042 g of *potassium hydrogen phthalate R* in 50 mL of *water R*, add 7.5 mL of *0.2 M sodium hydroxide* and dilute to 200.0 mL with *water R*.

Acetate buffer solution pH 4.5. *4012500.*

Dissolve 77.1 g of *ammonium acetate R* in *water R*. Add 70 mL of *glacial acetic acid R* and dilute to 1000.0 mL with *water R*.

0.5 M Ammonium acetate buffer solution pH 4.5. *4014200.*

Mix 14.3 mL of *glacial acetic acid R* and 470 mL of *water R* and adjust to pH 4.5 with *concentrated ammonia R*. Dilute to 500.0 mL with *water R*.

0.05 M Phosphate buffer solution pH 4.5. *4009000.*

Dissolve 6.80 g of *potassium dihydrogen phosphate R* in 1000.0 mL of *water R*. The pH of the solution is 4.5.

Sodium acetate buffer solution pH 4.5. *4010100.*

Dissolve 63 g of *anhydrous sodium acetate R* in *water R*, add 90 mL *acetic acid R* and adjust to pH 4.5, and dilute to 1000 mL with *water R*.

Acetate buffer solution pH 4.6. *4001400.*

Dissolve 5.4 g of *sodium acetate R* in 50 mL of *water R*, add 2.4 g of *glacial acetic acid R* and dilute to 100.0 mL with *water R*. Adjust the pH if necessary.

Succinate buffer solution pH 4.6. *4001500.*

Disssolve 11.8 g of *succinic acid R* in a mixture of 600 mL of *water R* and 82 mL of *1 M sodium hydroxide* and dilute to 1000.0 mL with *water R*.

Acetate buffer solution pH 4.7. *4001600.*

Dissolve 136.1 g of *sodium acetate R* in 500 mL of *water R*. Mix 250 mL of this solution with 250 mL of *dilute acetic acid R*. Shake twice with a freshly prepared, filtered, 0.1 g/L solution of *dithizone R* in *chloroform R*. Shake with *carbon tetrachloride R* until the extract is colourless. Filter the aqueous layer to remove traces of carbon tetrachloride.

Acetate buffer solution pH 4.7 R1. *4013600.*

Dissolve 136.1 g of *sodium acetate R* in 500 mL of *water R*. Mix 250 mL of this solution with 250 mL of *dilute acetic acid R*.

Acetate buffer solution pH 5.0. *4009100.*

To 120 mL of a 6 g/L solution of *glacial acetic acid R* add 100 mL of *0.1 M potassium hydroxide* and about 250 mL of *water R*. Mix. Adjust the pH to 5.0 with a 6 g/L solution of *acetic acid R* or with *0.1 M potassium hydroxide* and dilute to 1000.0 mL with *water R*.

Citrate buffer solution pH 5.0. *4010700.*

Prepare a solution containing 20.1 g/L of *citric acid R* and 8.0 g/L of *sodium hydroxide R*. Adjust the pH with *dilute hydrochloric acid R*.

0.2 M Deuterated sodium phosphate buffer solution pH 5.0. *4013900.*

Dissolve 2.76 g of *sodium dihydrogen phosphate monohydrate R* in 90 mL of *deuterium oxide R*, adjust the pH with a deuterated solution of *phosphoric acid R* or a deuterated 1 M solution of *sodium hydroxide R*, dilute to 100 mL with *deuterium oxide R* and mix.

Phosphate buffer solution pH 5.0. *4011300.*

Dissolve 2.72 g of *potassium dihydrogen phosphate R* in 800 mL of *water R*. Adjust the pH with *1 M potassium hydroxide* and dilute to 1000 mL with *water R*.

Buffer solution pH 5.2. *4001700.*

Dissolve 1.02 g of *potassium hydrogen phthalate R* in 30.0 mL of *0.1 M sodium hydroxide*. Dilute to 100.0 mL with *water R*.

0.067 M Phosphate buffer solution pH 5.4. *4012000.*

Mix appropriate volumes of a 23.99 g/L solution of *disodium hydrogen phosphate R* with a 9.12 g/L solution of *sodium dihydrogen phosphate monohydrate R* to obtain pH 5.4.

Acetate-edetate buffer solution pH 5.5. *4001900.*

Dissolve 250 g of *ammonium acetate R* and 15 g *sodium edetate R* in 400 mL of *water R* and add 125 mL of *glacial acetic acid R*.

Buffer solution pH 5.5. *4001800.*

Dissolve 54.4 g of *sodium acetate R* in 50 mL of *water R*, heating to 35 °C if necessary. After cooling, slowly add 10 mL of *anhydrous acetic acid R*. Shake and dilute to 100.0 mL with *water R*.

Phosphate buffer solution pH 5.5. *4002000.*

Dissolve 13.61 g of *potassium dihydrogen phosphate R* in *water R* and dilute to 1000.0 mL with the same solvent (solution A). Dissolve 35.81 g of *disodium hydrogen phosphate R* in *water R* and dilute to 1000.0 mL with the same solvent (solution B). Mix 96.4 mL of solution A and 3.6 mL of solution B.

Phosphate-citrate buffer solution pH 5.5. *4008700.*

Mix 56.85 mL of a 28.4 g/L solution of *anhydrous disodium hydrogen phosphate R* and 43.15 mL of a 21 g/L solution of *citric acid R*.

Phosphate buffer solution pH 5.6. *4011200.*

Dissolve 0.908 g of *potassium dihydrogen phosphate R* in *water R* and dilute to 100.0 mL with the same solvent (solution A). Dissolve 1.161 g of *dipotassium hydrogen phosphate R* in *water R* and dilute to 100.0 mL with the same solvent (solution B). Mix 94.4 mL of solution A and 5.6 mL of solution B. If necessary, adjust to pH 5.6 using solution A or solution B.

Phosphate buffer solution pH 5.8. *4002100.*

Dissolve 1.19 g of *disodium hydrogen phosphate dihydrate R* and 8.25 g of *potassium dihydrogen phosphate R* in *water R* and dilute to 1000.0 mL with the same solvent.

Acetate buffer solution pH 6.0. *4002200.*

Dissolve 100 g of *ammonium acetate R* in 300 mL of *water R*, add 4.1 mL of *glacial acetic acid R*, adjust the pH if necessary using *ammonia R* or *acetic acid R* and dilute to 500.0 mL with *water R*.

Diethylammonium phosphate buffer solution pH 6.0. *4002300.*

Dilute 68 mL of *phosphoric acid R* to 500 mL with *water R*. To 25 mL of this solution add 450 mL of *water R* and 6 mL of *diethylamine R*, adjust to pH 6 ± 0.05, if necessary, using *diethylamine R* or *phosphoric acid R* and dilute to 500.0 mL with *water R*.

Phosphate buffer solution pH 6.0. *4002400.*

Mix 63.2 mL of a 71.5 g/L solution of *disodium hydrogen phosphate R* and 36.8 mL of a 21 g/L solution of *citric acid R*.

Phosphate buffer solution pH 6.0 R1. *4002500.*

Dissolve 6.8 g of *sodium dihydrogen phosphate R* in *water R* and dilute to 1000.0 mL with *water R*. Adjust the pH with *strong sodium hydroxide solution R*.

Phosphate buffer solution pH 6.0 R2. *4002600.*

To 250.0 mL of *0.2 M potassium dihydrogen phosphate R* add 28.5 mL of *0.2 M sodium hydroxide* and dilute to 1000.0 mL with *water R*.

Phosphate buffer solution pH 6.4. *4002800.*

Dissolve 2.5 g of *disodium hydrogen phosphate R*, 2.5 g of *sodium dihydrogen phosphate R* and 8.2 g of *sodium chloride R* in 950 mL of *water R*. Adjust the pH of the solution to 6.4 with *1 M sodium hydroxide* or *1 M hydrochloric acid*, if necessary. Dilute to 1000.0 mL with *water R*.

0.5 M Phthalate buffer solution pH 6.4. *4009200.*

Dissolve 100 g of *potassium hydrogen phthalate R* in *water R* and dilute to 1000.0 mL with the same solvent. Adjust the pH if necessary, using *strong sodium hydroxide solution R*.

Buffer solution pH 6.5. *4002900.*

Dissolve 60.5 g of *disodium hydrogen phosphate R* and 46 g of *potassium dihydrogen phosphate R* in *water R*. Add 100 mL of *0.02 M sodium edetate* and 20 mg of *mercuric chloride R* and dilute to 1000.0 mL with *water R*.

Imidazole buffer solution pH 6.5. *4003000.*

Dissolve 6.81 g of *imidazole R*, 1.23 g of *magnesium sulfate R* and 0.73 g of *calcium sulfate R* in 752 mL of *0.1 M hydrochloric acid*. Adjust the pH if necessary and dilute to 1000.0 mL with *water R*.

0.1 M phosphate buffer solution pH 6.5. *4010800.*

Dissolve 13.80 g of *sodium dihydrogen phosphate monohydrate R* in 900 mL of *distilled water R*. Adjust the pH using a 400 g/L solution of *sodium hydroxide R*. Dilute to 1000 mL with *distilled water R*.

Phosphate buffer solution pH 6.5. *4012800.*

Dissolve 2.75 g of *sodium dihydrogen phosphate R* and 4.5 g of *sodium chloride R* in 500 mL of *water R*. Adjust the pH with *phosphate buffer solution pH 8.5 R*.

Buffer solution pH 6.6. *4003100.*

To 250.0 mL of *0.2 M potassium dihydrogen phosphate R* add 89.0 mL of *0.2 M sodium hydroxide*. Dilute to 1000.0 mL with *water R*.

0.1 M Phosphate buffer solution pH 6.7. *4014300.*

Dissolve 15.6 g of *sodium dihydrogen phosphate R* in *water R* and dilute to 1.0 L with the same solvent. Dissolve 17.8 g of *disodium hydrogen phosphate dihydrate R* in *water R* and dilute to 1.0 L with the same solvent. Mix the solutions, check the pH and if necessary adjust to pH 6.7.

Phosphate buffered saline pH 6.8. *4003200.*

Dissolve 1.0 g of *potassium dihydrogen phosphate R*, 2.0 g of *dipotassium hydrogen phosphate R* and 8.5 g of *sodium chloride R* in 900 mL of *water R*, adjust the pH if necessary and dilute to 1000.0 mL with the same solvent.

Phosphate buffer solution pH 6.8. *4003300.*

Mix 77.3 mL of a 71.5 g/L solution of *disodium hydrogen phosphate R* with 22.7 mL of a 21 g/L solution of *citric acid R*.

Phosphate buffer solution pH 6.8 R1. *4003400.*

To 51.0 mL of a 27.2 g/L solution of *potassium dihydrogen phosphate R* add 49.0 mL of a 71.6 g/L solution of *disodium hydrogen phosphate R*. Adjust the pH if necessary.

Storage: at 2 °C to 8 °C.

1 M tris-hydrochloride buffer solution pH 6.8. *4009300.*

Dissolve 60.6 g of *tris(hydroxymethyl)aminomethane R* in 400 mL of *water R*. Adjust the pH with *hydrochloric acid R* and dilute to 500.0 mL with *water R*.

Buffer solution pH 7.0. *4003500.*

To 1000 mL of a solution containing 18 g/L of *disodium hydrogen phosphate R* and 23 g/L of *sodium chloride R* add sufficient (about 280 mL) of a solution containing 7.8 g/L of *sodium dihydrogen phosphate R* and 23 g/L of *sodium chloride R* to adjust the pH. Dissolve in the solution sufficient *sodium azide R* to give a 0.2 g/L solution.

Maleate buffer solution pH 7.0. *4003600.*

Dissolve 10.0 g of *sodium chloride R*, 6.06 g of *tris(hydroxymethyl)aminomethane R* and 4.90 g of *maleic anhydride R* in 900 mL of *water R*. Adjust the pH using a 170 g/L solution of *sodium hydroxide R*. Dilute to 1000.0 mL with *water R*.

Storage: at 2 °C to 8 °C; use within 3 days.

0.025 M Phosphate buffer solution pH 7.0. *4009400.*

Mix 1 volume of *0.063 M phosphate buffer solution pH 7.0 R* with 1.5 volumes of *water R*.

0.03 M Phosphate buffer solution pH 7.0. *4010300.*

Dissolve 5.2 g of *dipotassium hydrogen phosphate R* in 900 mL of *water for chromatography R*. Adjust the solution to pH 7.0 ± 0.1 using *phosphoric acid R* and dilute to 1000 mL with *water for chromatography R*.

0.05 M Phosphate buffer solution pH 7.0. *4012400.*

Mix 34 mL of *water R* and 100 mL of *0.067 M phosphate buffer solution pH 7.0 R*.

0.063 M Phosphate buffer solution pH 7.0. *4009500.*

Dissolve 5.18 g of *anhydrous disodium hydrogen phosphate R* and 3.65 g of *sodium dihydrogen phosphate monohydrate R* in 950 mL of *water R* and adjust the pH with *phosphoric acid R*; dilute to 1000.0 mL with *water R*.

0.067 M Phosphate buffer solution pH 7.0. *4003800.*

Dissolve 0.908 g of *potassium dihydrogen phosphate R* in *water R* and dilute to 100.0 mL with the same solvent (solution A). Dissolve 2.38 g of *disodium hydrogen phosphate R* in *water R* and dilute to 100.0 mL with the same solvent (solution B). Mix 38.9 mL of solution A and 61.1 mL of solution B. Adjust the pH if necessary.

0.1 M Phosphate buffer solution pH 7.0. *4008200.*

Dissolve 1.361 g of *potassium dihydrogen phosphate R* in *water R* and dilute to 100.0 mL with the same solvent. Adjust the pH using a 35 g/L solution of *disodium hydrogen phosphate R*.

Phosphate buffer solution pH 7.0. *4003700.*

Mix 82.4 mL of a 71.5 g/L solution of *disodium hydrogen phosphate R* with 17.6 mL of a 21 g/L solution of *citric acid R*.

Phosphate buffer solution pH 7.0 R1. *4003900.*

Mix 250.0 mL of *0.2 M potassium dihydrogen phosphate R* and 148.2 mL of a 8 g/L solution of *sodium hydroxide R*, adjust the pH if necessary. Dilute to 1000.0 mL with *water R*.

Phosphate buffer solution pH 7.0 R2. *4004000.*

Mix 50.0 mL of a 136 g/L solution of *potassium dihydrogen phosphate R* with 29.5 mL of *1 M sodium hydroxide* and dilute to 100.0 mL with *water R*. Adjust the pH to 7.0 ± 0.1.

Phosphate buffer solution pH 7.0 R3. *4008600.*

Dissolve 5 g of *potassium dihydrogen phosphate R* and 11 g of *dipotassium hydrogen phosphate R* in 900 mL of *water R*. Adjust to pH 7.0 with *dilute phosphoric acid R* or *dilute sodium hydroxide solution R*. Dilute to 1000 mL with *water R* and mix.

Phosphate buffer solution pH 7.0 R4. *4010200.*

Dissolve 28.4 g of *anhydrous disodium hydrogen phosphate R* and 18.2 g of *potassium dihydrogen phosphate R* in *water R* and dilute to 500 mL with the same solvent.

Phosphate buffer solution pH 7.0 R5. *4011400.*

Dissolve 28.4 g of *anhydrous disodium hydrogen phosphate R* in 800 mL of *water R*. Adjust the pH using a 30 per cent *m/m* solution of *phosphoric acid R* and dilute to 1000 mL with *water R*.

Tetrabutylammonium buffer solution pH 7.0. *4010900.*

Dissolve 6.16 g of *ammonium acetate R* in a mixture of 15 mL of *tetrabutylammonium hydroxide solution (400 g/L) R* and 185 mL of *water R*. Adjust the pH with *nitric acid R*.

Buffered salt solution pH 7.2. *4004300.*

Dissolve in *water R* 8.0 g of *sodium chloride R*, 0.2 g of *potassium chloride R*, 0.1 g of *anhydrous calcium chloride R*, 0.1 g of *magnesium chloride R*, 3.18 g of *disodium hydrogen phosphate R* and 0.2 g of *potassium dihydrogen phosphate R* and dilute to 1000.0 mL with *water R*.

Buffer solution pH 7.2. *4004100.*

To 250.0 mL of *0.2 M potassium dihydrogen phosphate R* add 175.0 mL of *0.2 M sodium hydroxide*. Dilute to 1000.0 mL with *water R*. Adjust the pH if necessary.

Phosphate-albumin buffered saline pH 7.2. *4004400.*

Dissolve 10.75 g of *disodium hydrogen phosphate R*, 7.6 g of *sodium chloride R* and 10 g of *bovine albumin R* in *water R* and dilute to 1000.0 mL with the same solvent. Immediately before use adjust the pH using *dilute sodium hydroxide solution R* or *dilute phosphoric acid R*.

Phosphate-albumin buffered saline pH 7.2 R1. *4009600.*

Dissolve 10.75 g of *disodium hydrogen phosphate R*, 7.6 g of *sodium chloride R* and 1 g of *bovine albumin R* in *water R* and dilute to 1000.0 mL with the same solvent. Immediately before use adjust the pH using *dilute sodium hydroxide solution R* or *dilute phosphoric acid R*.

Phosphate buffer solution pH 7.2. *4004200.*

Mix 87.0 mL of a 71.5 g/L solution of *disodium hydrogen phosphate R* with 13.0 mL of a 21 g/L solution of *citric acid R*.

Imidazole buffer solution pH 7.3. *4004500.*

Dissolve 3.4 g of *imidazole R* and 5.8 g of *sodium chloride R* in *water R*, add 18.6 mL of *1 M hydrochloric acid* and dilute to 1000.0 mL with *water R*. Adjust the pH if necessary.

Barbital buffer solution pH 7.4. *4004700.*

Mix 50 mL of a solution in *water R* containing 19.44 g/L of *sodium acetate R* and 29.46 g/L of *barbital sodium R* with 50.5 mL of *0.1 M hydrochloric acid*, add 20 mL of an 85 g/L of *sodium chloride R* and dilute to 250 mL with *water R*.

Buffer solution pH 7.4. *4004600.*

Dissolve 0.6 g of *potassium dihydrogen phosphate R*, 6.4 g of *disodium hydrogen phosphate R* and 5.85 g of *sodium chloride R* in *water R*, and dilute to 1000.0 mL with the same solvent. Adjust the pH if necessary.

Phosphate buffered saline pH 7.4. *4005000.*

Dissolve 2.38 g of *disodium hydrogen phosphate R*, 0.19 g of *potassium dihydrogen phosphate R* and 8.0 g of *sodium chloride R* in water. Dilute to 1000.0 mL with the same solvent. Adjust the pH if necessary.

Phosphate buffer solution pH 7.4. *4004800.*

Add 250.0 mL of *0.2 M potassium dihydrogen phosphate R* to 393.4 mL of *0.1 M sodium hydroxide*.

Tris(hydroxymethyl)aminomethane buffer solution pH 7.4. *4012100.*

Dissolve 30.3 g of *tris(hydroxymethyl)aminomethane R* in approximately 200 mL of *water R*. Add 183 mL of *1 M hydrochloric acid*. Dilute to 500.0 mL with *water R*. *Note: the pH is 7.7-7.8 at room temperature and 7.4 at 37 °C. This solution is stable for several months at 4 °C.*

Tris(hydroxymethyl)aminomethane sodium chloride buffer solution pH 7.4. *4004900.*

Dissolve 6.08 g of *tris(hydroxymethyl)aminomethane R*, 8.77 g of *sodium chloride R* in 500 mL of *distilled water R*. Add 10.0 g of *bovine albumin R*. Adjust the pH using *hydrochloric acid R*. Dilute to 1000.0 mL with *distilled water R*.

Tris(hydroxymethyl)aminomethane sodium chloride buffer solution pH 7.4 R1. *4012200.*

Dissolve 0.1 g of *bovine albumin R* in a mixture containing 2 mL of *tris(hydroxymethyl)aminomethane buffer solution pH 7.4 R* and 50 mL of a 5.84 mg/mL solution of *sodium chloride R*. Dilute to 100.0 mL with *water R*.

Tris-sodium acetate buffer solution pH 7.4. *4012900.*

Dissolve 6.3 g of *tris(hydroxymethyl)aminomethane R* and 4.9 g of *anhydrous sodium acetate R* in 900 mL of *water R*. Adjust to pH 7.4 with *sulfuric acid R* and dilute to 1000 mL with *water R*.

Tris-sodium acetate-sodium chloride buffer solution pH 7.4. *4013000.*

Dissolve 30.0 g of *tris(hydroxymethyl)aminomethane R*, 14.5 g of *anhydrous sodium acetate R* and 14.6 g of *sodium chloride R* in 900 mL of *water R*. Add 0.50 g of *bovine albumin R*. Adjust to pH 7.4 with *sulfuric acid R* and dilute to 1000 mL with *water R*.

Borate buffer solution pH 7.5. *4005200.*

Dissolve 2.5 g of *sodium chloride R*, 2.85 g of *disodium tetraborate R* and 10.5 g of *boric acid R* in *water R* and dilute to 1000.0 mL with the same solvent. Adjust the pH if necessary.

Storage: at 2 °C to 8 °C.

Buffer (HEPES) solution pH 7.5. *4009700.*

Dissolve 2.38 g of *2-[4-(2-hydroxyethyl)piperazin-1-yl]ethanesulfonic acid R* in about 90 mL of *water R*. Adjust the pH to 7.5 with *sodium hydroxide solution R*. Dilute to 100 mL with *water R*.

0.05 M Phosphate buffer solution pH 7.5. *4014400.*

Dissolve 0.89 g of *disodium hydrogen phosphate dihydrate R* in about 80 mL of *water R*. Adjust to pH 7.5 with an 8.5 per cent *V/V* solution of *phosphoric acid R* and dilute to 100.0 mL with *water R*.

0.2 M Phosphate buffer solution pH 7.5. *4005400.*

Dissolve 27.22 g of *potassium dihydrogen phosphate R* in 930 mL of *water R*, adjust to pH 7.5 with a 300 g/L solution of *potassium hydroxide R* and dilute to 1000.0 mL with *water R*.

0.33 M Phosphate buffer solution pH 7.5. *4005300.*

Dissolve 119.31 g of *disodium hydrogen phosphate R* in *water R* and dilute to 1000.0 mL with the same solvent (solution A). Dissolve 45.36 g of *potassium dihydrogen phosphate R* in *water R* and dilute to 1000.0 mL with the same solvent (solution B). Mix 85 mL of solution A and 15 mL of solution B. Adjust the pH if necessary.

0.05 M Tris-hydrochloride buffer solution pH 7.5. *4005600.*

Dissolve 6.057 g of *tris(hydroxymethyl)aminomethane R* in *water R* and adjust the pH with *hydrochloric acid R*. Dilute to 1000.0 mL with *water R*.

1 M Tris-hydrochloride buffer solution pH 7.5. *4014500.*

Dissolve 12.11 g of *tris(hydroxymethyl)aminomethane R* in 90 mL of *water R*, adjust to pH 7.5 with *hydrochloric acid R* and dilute to 100.0 mL with *water R*.

Tris(hydroxymethyl)aminomethane buffer solution pH 7.5. *4005500.*

Dissolve 7.27 g of *tris(hydroxymethyl)aminomethane R* and 5.27 g of *sodium chloride R* in *water R*, and adjust the pH if necessary. Dilute to 1000.0 mL with *water R*.

Sodium citrate buffer solution pH 7.8 (0.034 M sodium citrate, 0.101 M sodium chloride). *4009800.*

Dissolve 10.0 g of *sodium citrate R* and 5.90 g of *sodium chloride R* in 900 mL of *water R*. Adjust the pH by addition of *hydrochloric acid R* and dilute to 1000 mL with *water R*.

0.0015 M Borate buffer solution pH 8.0. *4006000.*

Dissolve 0.572 g of *disodium tetraborate R* and 2.94 g of *calcium chloride R* in 800 mL of *water R*. Adjust the pH with *1 M hydrochloric acid*. Dilute to 1000.0 mL with *water R*.

Buffer solution pH 8.0. *4005900.*

To 50.0 mL of *0.2 M potassium dihydrogen phosphate R* add 46.8 mL of *0.2 M sodium hydroxide*. Dilute to 200.0 mL with *water R*.

Buffer solution pH 8.0 R1. *4010400.*

Dissolve 20 g of *dipotassium hydrogen phosphate R* in 900 mL of *water R*. Adjust the pH with *phosphoric acid R*. Dilute to 1000 mL with *water R*.

0.02 M Phosphate buffer solution pH 8.0. *4006100.*

To 50.0 mL of *0.2 M potassium dihydrogen phosphate R* add 46.8 mL of *0.2 M sodium hydroxide*. Dilute to 500.0 mL with *water R*.

0.02 M Sodium phosphate buffer solution pH 8.0. *4013700.*

Dissolve 0.31 g of *sodium dihydrogen phosphate R* in 70 mL of *water R* and adjust to pH 8.0 with *1 M sodium hydroxide*, then dilute to 100 mL with *water R*.

0.1 M Phosphate buffer solution pH 8.0. *4008400.*

Dissolve 0.523 g of *potassium dihydrogen phosphate R* and 16.73 g of *dipotassium hydrogen phosphate R* in *water R* and dilute to 1000.0 mL with the same solvent.

1 M Phosphate buffer solution pH 8.0. *4007800.*

Dissolve 136.1 g of *potassium dihydrogen phosphate R* in *water R*, adjust the pH with *1 M sodium hydroxide*. Dilute to 1000.0 mL with *water R*.

1 M Tris-hydrochloride buffer solution pH 8.0. *4012700.*

Dissolve 121.1 g of *tris(hydroxymethyl)aminomethane R* and 1.47 g of *calcium chloride R* in 900 mL of *water R*. Adjust the pH with *hydrochloric acid R* and dilute to 1000.0 mL with *water R*.

Tris-hydrochloride buffer solution pH 8.0. *4012300.*

Dissolve 1.21 g of *tris(hydroxymethyl)aminomethane R* and 29.4 mg of *calcium chloride R* in *water R*. Adjust the pH with *1 M hydrochloric acid* and dilute to 100.0 mL with *water R*.

Tris-sodium acetate buffer solution pH 8.0. *4013100.*

Dissolve 6.3 g of *tris(hydroxymethyl)aminomethane R* and 4.9 g of *anhydrous sodium acetate R* in 900 mL of *water R*. Adjust to pH 8.0 with *sulfuric acid R* and dilute to 1000 mL with *water R*.

Tris-sodium acetate-sodium chloride buffer solution pH 8.0. *4013200.*

Dissolve 30.0 g of *tris(hydroxymethyl)aminomethane R*, 14.5 g of *anhydrous sodium acetate R* and 14.6 g of *sodium chloride R* in 900 mL of *water R*. Add 0.50 g of *bovine albumin R*. Adjust to pH 8.0 with *sulfuric acid R* and dilute to 1000 mL with *water R*.

Tris(hydroxymethyl)aminomethane buffer solution pH 8.1. *4006200.*

Dissolve 0.294 g of *calcium chloride R* in 40 mL of *tris(hydroxymethyl)aminomethane solution R* and adjust the pH with *1 M hydrochloric acid*. Dilute to 100.0 mL with *water R*.

Tris-glycine buffer solution pH 8.3. *4006300.*

Dissolve 6.0 g of *tris(hydroxymethyl)aminomethane R* and 28.8 g of *glycine R* in *water R* and dilute to 1000.0 mL with the same solvent. Dilute 1 volume to 10 volumes with *water R* immediately before use.

Tris-hydrochloride buffer solution pH 8.3. *4011800.*

Dissolve 9.0 g of *tris(hydroxymethyl)aminomethane R* in 2.9 L of *water R*. Adjust the pH with *1 M hydrochloric acid*. Adjust the volume to 3 L with *water R*.

0.05 M Tris-hydrochloride buffer solution pH 9.0. *4013500.*

Dissolve 0.605 g of *tris(hydroxymethyl)aminomethane R* in *water R*. Adjust the pH with *1 M hydrochloric acid* and dilute to 100.0 mL with *water R*.

Barbital buffer solution pH 8.4. *4006400.*

Dissolve 8.25 g of *barbital sodium R* in *water R* and dilute to 1000.0 mL with the same solvent.

Tris-EDTA BSA buffer solution pH 8.4. *4006500.*

Dissolve 6.1 g of *tris(hydroxymethyl)aminomethane R*, 2.8 g of *sodium edetate R*, 10.2 g of *sodium chloride R* and 10 g of *bovine albumin R* in *water R*, adjust to pH 8.4 using *1 M hydrochloric acid* and dilute to 1000.0 mL with *water R*.

Tris(hydroxymethyl)aminomethane-EDTA buffer solution pH 8.4. *4006600.*

Dissolve 5.12 g of *sodium chloride R*, 3.03 g of *tris(hydroxymethyl)aminomethane R* and 1.40 g of *sodium edetate R* in 250 mL of *distilled water R*. Adjust the pH to 8.4 using *hydrochloric acid R*. Dilute to 500.0 mL with *distilled water R*.

Guanidine-tris(hydroxymethyl)aminomethane-EDTA buffer solution pH 8.5. *4014600.*

Dissolve 1.0 g of *sodium edetate R*, 12.1 g of *tris(hydroxymethyl)aminomethane R* and 57.0 g of *guanidine hydrochloride R* in 35 mL of *water R*. Adjust to pH 8.5 with *hydrochloric acid R* and dilute to 100 mL with *water R*.

Phosphate buffer solution pH 8.5. *4013300.*

Dissolve 3.5 g of *dipotassium hydrogen phosphate R* and 4.5 g of *sodium chloride R* in 500 mL of *water R*. Adjust the pH with a mixture of equal volumes of *dilute phosphoric acid R* and *water R*.

Tris acetate buffer solution pH 8.5. *4006700.*

Dissolve 0.294 g of *calcium chloride R* and 12.11 g of *tris(hydroxymethyl)aminomethane R* in *water R*. Adjust the pH with *acetic acid R*. Dilute to 1000.0 mL with *water R*.

Barbital buffer solution pH 8.6 R1. *4006900.*

Dissolve in *water R* 1.38 g of *barbital R*, 8.76 g of *barbital sodium R* and 0.38 g of *calcium lactate R* and dilute to 1000.0 mL with the same solvent.

1.5 M tris-hydrochloride buffer solution pH 8.8. *4009900.*

Dissolve 90.8 g of *tris(hydroxymethyl)aminomethane R* in 400 mL of *water R*. Adjust the pH with *hydrochloric acid R* and dilute to 500.0 mL with *water R*.

Buffer (phosphate) solution pH 9.0. *4008300.*

Dissolve 1.74 g of *potassium dihydrogen phosphate R* in 80 mL of *water R*, adjust the pH with *1 M potassium hydroxide* and dilute to 100.0 mL with *water R*.

Buffer solution pH 9.0. *4007000.*

Dissolve 6.18 g of *boric acid R* in *0.1 M potassium chloride R* and dilute to 1000.0 mL with the same solvent. Mix 1000.0 mL of this solution and 420.0 mL of *0.1 M sodium hydroxide*.

Buffer solution pH 9.0 R1. *4007100.*

Dissolve 6.20 g of *boric acid R* in 500 mL of *water R* and adjust the pH with *1 M sodium hydroxide* (about 41.5 mL). Dilute to 1000.0 mL with *water R*.

Ammonium chloride buffer solution pH 9.5. *4007200.*

Dissolve 33.5 g of *ammonium chloride R* in 150 mL of *water R*, add 42.0 mL of *concentrated ammonia R* and dilute to 250.0 mL with *water R*.

Storage: in a polyethylene container.

Ammonium chloride buffer solution pH 10.0. *4007300.*

Dissolve 5.4 g of *ammonium chloride R* in 20 mL of *water R*, add 35.0 mL of *ammonia R* and dilute to 100.0 mL with *water R*.

Diethanolamine buffer solution pH 10.0. *4007500.*

Dissolve 96.4 g of *diethanolamine R* in *water R* and dilute to 400 mL with the same solvent. Add 0.5 mL of an 186 g/L solution of *magnesium chloride R* and adjust the pH with *1 M hydrochloric acid*. Dilute to 500.0 mL with *water R*.

0.1 M Ammonium carbonate buffer solution pH 10.3. *4011900.*

Dissolve 7.91 g of *ammonium carbonate R* in 800 mL of *water R*. Adjust the pH with *dilute sodium hydroxide solution R*. Dilute to 1000.0 mL with *water R*.

Ammonium chloride buffer solution pH 10.4. *4011000.*

Dissolve 70 g of *ammonium chloride R* in 200 mL of *water R*, add 330 mL of *concentrated ammonia R* and dilute to 1000.0 mL with *water R*. If necessary, adjust to pH 10.4 with *ammonia R*.

Borate buffer solution pH 10.4. *4011100.*

Dissolve 24.64 g of *boric acid R* in 900 mL of *distilled water R*. Adjust the pH using a 400 g/L solution of *sodium hydroxide R*. Dilute to 1000 mL with *distilled water R*.

Ammonium chloride buffer solution pH 10.7. *4013400.*

Dissolve 67.5 g of *ammonium chloride R* in *water R*, add 570 mL of *concentrated ammonia R* and dilute to 1000.0 mL with *water R*.

Buffer solution pH 10.9. *4007600.*

Dissolve 6.75 g of *ammonium chloride R* in *ammonia R* and dilute to 100.0 mL with the same solvent.

Total-ionic-strength-adjustment buffer. *4007700.*

Dissolve 58.5 g of *sodium chloride R*, 57.0 mL of *glacial acetic acid R*, 61.5 g of *sodium acetate R* and 5.0 g of *cyclohexylenedinitrilotetra-acetic acid R* in *water R* and dilute to 500.0 mL with the same solvent. Adjust to pH 5.0 to 5.5 with a 335 g/L solution of *sodium hydroxide R* and dilute to 1000.0 mL with *distilled water R*.

Total-ionic-strength-adjustment buffer R1. *4008800.*

Dissolve 210 g of *citric acid R* in 400 mL of *distilled water R*. Adjust to pH 7.0 with *concentrated ammonia R*. Dilute to 1000.0 mL with *distilled water R* (solution A). Dissolve 132 g of *ammonium phosphate R* in *distilled water R* and dilute to 1000.0 mL with the same solvent (solution B). To a suspension of 292 g of (ethylenedinitrilo)tetra-*acetic acid R* in about 500 mL of *distilled water R*, add about 200 mL of *concentrated ammonia R* to dissolve. Adjust the pH to 6 to 7 with *concentrated ammonia R*. Dilute to 1000.0 mL with *distilled water R* (solution C). Mix equal volumes of solution A, B, and C and adjust to pH 7.5 with *concentrated ammonia R*.

Buffer solution pH 11. *4014000.*

Dissolve 6.21 g of *boric acid R*, 4.00 g of *sodium hydroxide R* and 3.70 g of *potassium chloride R* in 500 mL of *water R* and dilute to 1000 mL with the same solvent.

4.2. VOLUMETRIC ANALYSIS

04/2010:40201

4.2.1. PRIMARY STANDARDS FOR VOLUMETRIC SOLUTIONS

Primary standards for volumetric solutions are indicated by the suffix RV. Primary standards of suitable quality may be obtained from commercial sources or prepared by the following methods.

Arsenious trioxide. As_2O_3. (M_r 197.8). *2000100.* [1327-53-3].

Sublime *arsenious trioxide R* in a suitable apparatus.

Storage: over *anhydrous silica gel R*.

Benzoic acid. $C_7H_6O_2$. (M_r 122.1). *2000200.* [65-85-0].

Sublime *benzoic acid R* in a suitable apparatus.

Potassium bromate. $KBrO_3$. (M_r 167.0). *2000300.* [7758-01-2].

Crystallise *potassium bromate R* from boiling *water R*. Collect the crystals and dry to constant mass at 180 °C.

Potassium hydrogen phthalate. $C_8H_5KO_4$. (M_r 204.2). *2000400.* [877-24-7].

Recrystallise *potassium hydrogen phthalate R* from boiling *water R*, collect the crystals at a temperature above 35 °C and dry to constant mass at 110 °C.

Sodium carbonate. Na_2CO_3 . (M_r 106.0). *2000500.* [497-19-8].

Filter at room temperature a saturated solution of *sodium carbonate R*. Introduce slowly into the filtrate a stream of *carbon dioxide R* with constant cooling and stirring. After about 2 h, collect the precipitate on a sintered-glass filter (*2.1.2*). Wash the filter with iced *water R* containing carbon dioxide. After drying at 100 °C to 105 °C, heat to constant mass at 270-300 °C, stirring from time to time.

Sodium chloride. NaCl. (M_r 58.44). *2000600.* [7647-14-5].

To 1 volume of the *saturated sodium chloride solution R* add 2 volumes of *hydrochloric acid R*. Collect the crystals formed and wash with *hydrochloric acid R1*. Remove the hydrochloric acid by heating on a water-bath and dry the crystals to constant mass at 300 °C.

Sulfanilic acid. $C_6H_7NO_3S$. (M_r 173.2). *2000700.* [121-57-3].

Recrystallise *sulfanilic acid R* from boiling *water R*. Filter and dry to constant mass at 100-105 °C.

Zinc. Zn. (M_r 65.4). *2000800.* [7440-66-6].

Content: minimum 99.9 per cent.

04/2010:40202

4.2.2. VOLUMETRIC SOLUTIONS

Volumetric solutions are prepared according to the usual chemical analytical methods. The accuracy of the apparatus used is verified to ensure that it is appropriate for the intended use.

The concentration of volumetric solutions is indicated in terms of molarity. Molarity expresses, as the number of moles, the amount of substance dissolved in 1 L of solution. A solution which contains *x* moles of substance per litre is said to be *x* M.

Volumetric solutions do not differ from the prescribed strength by more than 10 per cent. The molarity of the volumetric solutions is determined by an appropriate number of titrations. The repeatability does not exceed 0.2 per cent (relative standard deviation).

Volumetric solutions are standardised by the methods described below. When a volumetric solution is to be used in an assay in which the end-point is determined by an electrochemical process (for example, amperometry or potentiometry) the solution is standardised by the same method. The composition of the medium in which a volumetric solution is standardised should be the same as that in which it is to be used.

Solutions more dilute than those described are obtained by dilution with *carbon dioxide-free water R* of the least-concentrated solution that describes a standardisation. The correction factors of these solutions are the same as those from which the dilutions were prepared.

0.1 M Acetic acid. *3008900.*

Dilute 6.0 g of *glacial acetic acid R* to 1000.0 mL with *water R*.

Standardisation. To 25.0 mL of acetic acid add 0.5 mL of *phenolphthalein solution R* and titrate with *0.1 M sodium hydroxide*.

0.1 M Ammonium and cerium nitrate. *3000100.*

Shake for 2 min a solution containing 56 mL of sulfuric acid R and 54.82 g of *ammonium and cerium nitrate R*, add five successive quantities, each of 100 mL, of *water R*, shaking after each addition. Dilute the clear solution to 1000.0 mL with *water R*. Standardise the solution after 10 days.

Standardisation. To 25.0 mL of the ammonium and cerium nitrate solution add 2.0 g of *potassium iodide R* and 150 mL of *water R*. Titrate immediately with *0.1 M sodium thiosulfate*, using 1 mL of *starch solution R* as indicator.

Storage: protected from light.

0.01 M Ammonium and cerium nitrate. *3000200.*

To 100.0 mL of *0.1 M ammonium and cerium nitrate* add, with cooling, 30 mL of sulfuric acid R and dilute to 1000.0 mL with *water R*.

0.1 M Ammonium and cerium sulfate. *3000300.*

Dissolve 65.0 g of *ammonium and cerium sulfate R* in a mixture of 500 mL of *water R* and 30 mL of sulfuric acid R. Allow to cool and dilute to 1000.0 mL with *water R*.

Standardisation. To 25.0 mL of the ammonium and cerium sulfate solution add 2.0 g of *potassium iodide R* and 150 mL of *water R*. Titrate immediately with *0.1 M sodium thiosulfate*, using 1 mL of *starch solution R* as indicator.

0.01 M Ammonium and cerium sulfate. *3000400.*

To 100.0 mL of *0.1 M ammonium and cerium sulfate* add, with cooling, 30 mL of sulfuric acid R and dilute to 1000.0 mL with *water R*.

0.1 M Ammonium thiocyanate. *3000500.*

Dissolve 7.612 g of *ammonium thiocyanate R* in *water R* and dilute to 1000.0 mL with the same solvent.

Standardisation. To 20.0 mL of *0.1 M silver nitrate* add 25 mL of *water R*, 2 mL of *dilute nitric acid R* and 2 mL of *ferric ammonium sulfate solution R2*. Titrate with the ammonium thiocyanate solution until a reddish-yellow colour is obtained.

0.1 M Barium chloride. *3000600.*

Dissolve 24.4 g of *barium chloride R* in *water R* and dilute to 1000.0 mL with the same solvent.

Standardisation. To 10.0 mL of the barium chloride solution add 60 mL of *water R*, 3 mL of *concentrated ammonia R* and 0.5-1 mg of *phthalein purple R*. Titrate with *0.1 M sodium edetate*. When the solution begins to decolorise, add 50 mL of *ethanol (96 per cent) R* and continue the titration until the blue-violet colour disappears.

0.05 M Barium perchlorate. *3000700.*

Dissolve 15.8 g of *barium hydroxide R* in a mixture of 7.5 mL of *perchloric acid R* and 75 mL of *water R*, adjust the solution to pH 3 by adding *perchloric acid R* and filter if necessary. Add 150 mL of *ethanol (96 per cent) R* and dilute to 250 mL with *water R*. Dilute to 1000.0 mL with *buffer solution pH 3.7 R*.

Standardisation. To 5.0 mL of *0.05 M sulfuric acid* add 5 mL of *water R*, 50 mL of *buffer solution pH 3.7 R* and 0.5 mL of *alizarin S solution R*. Titrate with the barium perchlorate solution until an orange-red colour appears. Standardise immediately before use.

0.025 M Barium perchlorate. *3009600.*

Dilute 500.0 mL of *0.05 M barium perchlorate* to 1000.0 mL with *buffer solution pH 3.7 R*.

0.004 M Benzethonium chloride. *3000900.*

Dissolve in *water R* 1.792 g of *benzethonium chloride R*, previously dried to constant mass at 100-105 °C, and dilute to 1000.0 mL with the same solvent.

Standardisation. Calculate the molarity of the solution from the content of $C_{27}H_{42}ClNO_2$ in the dried benzethonium chloride determined as follows. Dissolve 0.350 g of the dried substance in 30 mL of *anhydrous acetic acid R* and add 6 mL of *mercuric acetate solution R*. Titrate with *0.1 M perchloric acid*, using 0.05 mL of *crystal violet solution R* as indicator. Carry out a blank titration.

1 mL of *0.1 M perchloric acid* is equivalent to 44.81 mg of $C_{27}H_{42}ClNO_2$.

0.01 M Bismuth nitrate. *3010000.*

Dissolve 4.86 g of *bismuth nitrate pentahydrate R* in 60 mL of *dilute nitric acid R* and dilute to 1000.0 mL with *water R*.

Standardisation. To 25.0 mL of the bismuth nitrate solution, add 50 mL of *water R* and titrate with *0.01 M sodium edetate* using 0.05 mL of a 1 g/L solution of *xylenol orange R* as indicator.

0.0167 M Bromide-bromate. *3001000.*

Dissolve 2.7835 g of *potassium bromate RV* and 13 g of *potassium bromide R* in *water R* and dilute to 1000.0 mL with the same solvent.

0.1 M Cerium sulfate. *3001100.*

Dissolve 40.4 g of *cerium sulfate R* in a mixture of 500 mL of *water R* and 50 mL of sulfuric acid R. Allow to cool and dilute to 1000.0 mL with *water R*.

Standardisation. To 20.0 mL of the cerium sulfate solution, add 1.6 g of *potassium iodide R*, 100 mL of *water R* and 40 mL of *dilute sulfuric acid R*. Titrate immediately with *0.1 M sodium thiosulfate* using 0.8 mL of *starch solution R* as indicator.

0.02 M Copper sulfate. *3001200.*

Dissolve 5.0 g of *copper sulfate R* in *water R* and dilute to 1000.0 mL with the same solvent.

Standardisation. To 20.0 mL of the copper sulfate solution add 2 g of *sodium acetate R* and 0.1 mL of *pyridylazonaphthol solution R*. Titrate with *0.02 M sodium edetate* until the colour changes from violet-blue to bright green. Titrate slowly towards the end of the titration.

0.1 M Ferric ammonium sulfate. *3001300.*

Dissolve 50.0 g of *ferric ammonium sulfate R* in a mixture of 6 mL of sulfuric acid R and 300 mL of *water R* and dilute to 1000.0 mL with *water R*.

Standardisation. To 25.0 mL of the ferric ammonium sulfate solution, add 3 mL of *hydrochloric acid R* and 2 g of *potassium iodide R*. Allow to stand for 10 min. Titrate with *0.1 M sodium thiosulfate*, using 1 mL of *starch solution R* as indicator.

1 mL of *0.1 M sodium thiosulfate* is equivalent to 48.22 mg of $FeNH_4(SO_4)_2,12H_2O$.

0.1 M Ferrous sulfate. *3001400.*

Dissolve 27.80 g of *ferrous sulfate R* in 500 mL of *dilute sulfuric acid R* and dilute to 1000.0 mL with *water R*.

Standardisation. To 25.0 mL of the ferrous sulfate solution add 3 mL of *phosphoric acid R* and titrate immediately with *0.02 M potassium permanganate*. Standardise immediately before use.

1 M Hydrochloric acid. *3001800.*

Dilute 103.0 g of *hydrochloric acid R* to 1000.0 mL with *water R*.

Standardisation. Dissolve 1.000 g of *sodium carbonate RV* in 50 mL of *water R*, add 0.1 mL of *methyl orange solution R* and titrate with the hydrochloric acid until the solution just becomes yellowish-red. Boil for 2 min. The solution reverts to yellow. Cool and continue the titration until a yellowish-red colour is obtained.

1 mL of *1 M hydrochloric acid* is equivalent to 53.00 mg of Na_2CO_3.

0.1 M Hydrochloric acid. *3002100.*

Dilute 100.0 mL of *1 M hydrochloric acid* to 1000.0 mL with *water R*.

Standardisation. Carry out the titration described for *1 M hydrochloric acid* using 0.100 g of *sodium carbonate RV* dissolved in 20 mL of *water R*.

1 mL of *0.1 M hydrochloric acid* is equivalent to 5.30 mg of Na_2CO_3.

0.1 M Hydrochloric acid, alcoholic. *3008800.*

Dilute 9.0 mL of *hydrochloric acid R* to 1000.0 mL with *aldehyde-free alcohol R*.

0.5 M Iodine. *3009400.*

Dissolve 127 g of *iodine R* and 200 g of *potassium iodide R* in *water R* and dilute to 1000.0 mL with the same solvent.

Standardisation. To 2.0 mL of the iodine solution add 1 mL of *dilute acetic acid R* and 50 mL of *water R*. Titrate with *0.1 M sodium thiosulfate*, using *starch solution R* as indicator.

Storage: protected from light.

0.05 M Iodine. *3002700.*

Dissolve 12.7 g of *iodine R* and 20 g of *potassium iodide R* in *water R* and dilute to 1000.0 mL with the same solvent.

Standardisation. To 20.0 mL of the iodine solution add 1 mL of *dilute acetic acid R* and 30 mL of *water R*. Titrate with *0.1 M sodium thiosulfate*, using *starch solution R* as indicator.

Storage: protected from light.

0.01 M Iodine. *3002900.*

Add 0.3 g of *potassium iodide R* to 20.0 mL of *0.05 M iodine* and dilute to 100.0 mL with *water R*.

0.1 M Lanthanum nitrate. *3010100.*

Dissolve 43.30 g of *lanthanum nitrate R* in *water R* and dilute to 1000.0 mL with the same solvent.

Standardisation. To 20 mL of the lanthanum nitrate solution, add 15 mL of *water R* and 25 mL of *0.1 M sodium edetate*. Add about 50 mg of *xylenol orange triturate R* and about 2 g of *hexamethylenetetramine R*. Titrate with *0.1 M zinc sulfate* until the colour changes from yellow to violet-pink.

1 mL of *0.1 M sodium edetate* is equivalent to 43.30 mg of $La(NO_3)_3,6H_2O$.

0.1 M Lead nitrate. *3003100.*

Dissolve 33 g of *lead nitrate R* in *water R* and dilute to 1000.0 mL with the same solvent.

Standardisation. Take 20.0 mL of the lead nitrate solution and carry out the determination of lead by complexometry (*2.5.11*).

0.05 M Lead nitrate. *3009700.*

Dilute 50.0 mL of *0.1 M Lead nitrate* to 100.0 mL with *water R*.

0.1 M Lithium methoxide. *3003300.*

Dissolve 0.694 g of *lithium R* in 150 mL of *anhydrous methanol R* and dilute to 1000.0 mL with *toluene R*.

Standardisation. To 10 mL of *dimethylformamide R* add 0.05 mL of a 3 g/L solution of *thymol blue R* in *methanol R* and titrate with the lithium methoxide solution until a pure blue colour is obtained. Immediately add 0.200 g of *benzoic acid RV*. Stir to effect solution and titrate with the lithium methoxide solution until the pure blue colour is again obtained. Protect the solution from atmospheric carbon dioxide throughout the titration. From the volume of titrant used in the second titration ascertain the exact strength of the lithium methoxide solution. Standardise immediately before use.

1 mL of *0.1 M lithium methoxide* is equivalent to 12.21 mg of $C_7H_6O_2$.

0.1 M Magnesium chloride. *3003400.*

Dissolve 20.33 g of *magnesium chloride R* in *water R* and dilute to 1000.0 mL with the same solvent.

Standardisation. Carry out the determination of magnesium by complexometry (*2.5.11*).

1 M Nitric acid. *3003600.*

Dilute 96.6 g of *nitric acid R* to 1000.0 mL with *water R*.

Standardisation. Dissolve 1.000 g of *sodium carbonate RV* in 50 mL of *water R*, add 0.1 mL of *methyl orange solution R* and titrate with the nitric acid until the solution just becomes reddish-yellow; boil for 2 min. The solution reverts to yellow. Cool and continue the titration until a reddish-yellow colour is obtained.

1 mL of *1 M nitric acid* is equivalent to 53.00 mg of Na_2CO_3.

0.1 M Perchloric acid. *3003900.*

Place 8.5 mL of *perchloric acid R* in a volumetric flask containing about 900 mL of *glacial acetic acid R* and mix. Add 30 mL of *acetic anhydride R*, dilute to 1000.0 mL with *glacial acetic acid R*, mix and allow to stand for 24 h. Determine the water content (*2.5.12*) without addition of methanol and, if necessary, adjust the water content to 0.1-0.2 per cent by adding either *acetic anhydride R* or *water R*. Allow to stand for 24 h.

Standardisation. Dissolve 0.350 g of *potassium hydrogen phthalate RV* in 50 mL of *anhydrous acetic acid R*, warming gently if necessary. Allow to cool protected from the air, and titrate with the perchloric acid solution, using 0.05 mL of *crystal violet solution R* as indicator. Note the temperature of the perchloric acid solution at the time of the titration. If the temperature at which an assay is carried out is different from that at which the *0.1 M perchloric acid* has been standardised, the volume used in the assay becomes:

$$V_c = V\,[1 + (t_1 - t_2)\,0.0011]$$

t_1 = temperature during standardisation,

t_2 = temperature during the assay,

V_c = corrected volume,

V = observed volume.

1 mL of *0.1 M perchloric acid* is equivalent to 20.42 mg of $C_8H_5KO_4$.

0.05 M Perchloric acid. *3004000.*

Dilute 50.0 mL of *0.1 M perchloric acid* to 100.0 mL with *anhydrous acetic acid R*.

0.02 M Perchloric acid. *3009900.*

Dilute 20.0 mL of *0.1 M perchloric acid* to 100.0 mL with *anhydrous acetic acid R*.

0.033 M Potassium bromate. *3004200.*

Dissolve 5.5670 g of *potassium bromate RV* in *water R* and dilute to 1000.0 mL with the same solvent.

0.02 M Potassium bromate. *3004300.*

Dissolve 3.340 g of *potassium bromate RV* in *water R* and dilute to 1000.0 mL with the same solvent.

0.0167 M Potassium bromate. *3004400.*

Prepare by diluting *0.033 M Potassium bromate*.

0.0083 M Potassium bromate. *3004500.*

Prepare by diluting *0.033 M Potassium bromate*.

0.0167 M Potassium dichromate. *3004600.*

Dissolve 4.90 g of *potassium dichromate R* in *water R* and dilute to 1000.0 mL with the same solvent.

Standardisation. To 20.0 mL of the potassium dichromate solution add 1 g of *potassium iodide R* and 7 mL of *dilute hydrochloric acid R*. Add 250 mL of *water R* and titrate with *0.1 M sodium thiosulfate*, using 3 mL of *starch solution R* as indicator, until the colour changes from blue to light green.

0.1 M Potassium hydrogen phthalate. *3004700.*

In a conical flask containing about 800 mL of *anhydrous acetic acid R*, dissolve 20.42 g of *potassium hydrogen phthalate RV*. Heat on a water-bath until completely dissolved, protected from humidity. Cool to 20 °C and dilute to 1000.0 mL with *anhydrous acetic acid R*.

1 M Potassium hydroxide. *3009100.*

Dissolve 60 g of *potassium hydroxide R* in *carbon dioxide-free water R* and dilute to 1000.0 mL with the same solvent.

Standardisation. Titrate 20.0 mL of the potassium hydroxide solution with *1 M hydrochloric acid*, using 0.5 mL of *phenolphthalein solution R* as indicator.

0.1 M Potassium hydroxide. *3004800.*

Dissolve 6 g of *potassium hydroxide R* in *carbon dioxide-free water R* and dilute to 1000.0 mL with the same solvent.

Standardisation. Titrate 20.0 mL of the potassium hydroxide solution with *0.1 M hydrochloric acid*, using 0.5 mL of *phenolphthalein solution R* as indicator.

0.5 M Potassium hydroxide in alcohol (60 per cent *V/V*). *3004900.*

Dissolve 3 g of *potassium hydroxide R* in *aldehyde-free alcohol R* (60 per cent *V/V*) and dilute to 100.0 mL with the same solvent.

Standardisation. Titrate 20.0 mL of the alcoholic potassium hydroxide solution (60 per cent *V/V*) with *0.5 M hydrochloric acid*, using 0.5 mL of *phenolphthalein solution R* as indicator.

0.5 M Potassium hydroxide, alcoholic. *3005000.*

Dissolve 3 g of *potassium hydroxide R* in 5 mL of *water R* and dilute to 100.0 mL with *aldehyde-free alcohol R*.

Standardisation. Titrate 20.0 mL of the alcoholic potassium hydroxide solution with *0.5 M hydrochloric acid*, using 0.5 mL of *phenolphthalein solution R* as indicator.

0.1 M Potassium hydroxide, alcoholic. *3005100.*

Dilute 20.0 mL of *0.5 M alcoholic potassium hydroxide* to 100.0 mL with *aldehyde-free alcohol R*.

0.01 M Potassium hydroxide, alcoholic. *3009000.*

Dilute 2.0 mL of *0.5 M alcoholic potassium hydroxide* to 100.0 mL with *aldehyde-free alcohol R*.

0.05 M Potassium iodate. *3005200.*

Dissolve 10.70 g of *potassium iodate R* in *water R* and dilute to 1000.0 mL with the same solvent.

Standardisation. Dilute 25.0 mL of the potassium iodate solution to 100.0 mL with *water R*. To 20.0 mL of this solution add 2 g of *potassium iodide R* and 10 mL of *dilute sulfuric acid R*. Titrate with *0.1 M sodium thiosulfate*, using 1 mL of *starch solution R*, added towards the end of the titration, as indicator.

0.001 M Potassium iodide. *3009200.*

Dilute 10.0 mL of *potassium iodide solution R* to 100.0 mL with *water R*. Dilute 5.0 mL of this solution to 500.0 mL with *water R*.

0.02 M Potassium permanganate. *3005300.*

Dissolve 3.2 g of *potassium permanganate R* in *water R* and dilute to 1000.0 mL with the same solvent. Heat the solution for 1 h on a water-bath, allow to cool and filter through a sintered-glass filter (*2.1.2*).

Standardisation. To 20.0 mL of the potassium permanganate solution, add 2 g of *potassium iodide R* and 10 mL of *dilute sulfuric acid R*. Titrate with *0.1 M sodium thiosulfate*, using 1 mL of *starch solution R*, added towards the end of the titration, as indicator. Standardise immediately before use.

Storage: protected from light.

0.1 M Silver nitrate. *3005600.*

Dissolve 17.0 g of *silver nitrate R* in *water R* and dilute to 1000.0 mL with the same solvent.

Standardisation. Dissolve 0.100 g of *sodium chloride RV* in 30 mL of *water R*. Titrate with the silver nitrate solution, determining the end-point potentiometrically (*2.2.20*).

1 mL of *0.1 M silver nitrate* is equivalent to 5.844 mg of NaCl.

Storage: protected from light.

0.001 M Silver nitrate. *3009300.*

Dilute 5.0 mL of silver nitrate 0.1 M to 500.0 mL with *water R*.

0.1 M Sodium arsenite. *3005800.*

Dissolve *arsenious trioxide RV* equivalent to 4.946 g of As_2O_3 in a mixture of 20 mL of *strong sodium hydroxide solution R* and 20 mL of *water R*, dilute to 400 mL with *water R* and add *dilute hydrochloric acid R* until the solution is neutral to *litmus paper R*. Dissolve 2 g of *sodium hydrogen carbonate R* in the solution and dilute to 500.0 mL with *water R*.

0.1 M Sodium edetate. *3005900.*

Dissolve 37.5 g of *sodium edetate R* in 500 mL of *water R*, add 100 mL of *1 M sodium hydroxide* and dilute to 1000.0 mL with *water R*.

Standardisation. Dissolve 0.120 g of *zinc RV* in 4 mL of *hydrochloric acid R1* and add 0.1 mL of *bromine water R*. Drive off the excess of bromine by boiling, add *dilute sodium hydroxide solution R* until the solution is weakly acid or neutral and carry out the assay of zinc by complexometry (*2.5.11*).

1 mL of *0.1 M sodium edetate* is equivalent to 6.54 mg of Zn.

Storage: in a polyethylene container.

0.02 M Sodium edetate. *3006000.*

Dissolve 7.444 g of *sodium edetate R* in *water R* and dilute to 1000.0 mL with the same solvent.

Standardisation. Dissolve 0.100 g of *zinc RV* in 4 mL of *hydrochloric acid R1* and add 0.1 mL of *bromine water R*. Drive off the excess of bromine by boiling. Transfer the solution to a volumetric flask and dilute to 100.0 mL with *water R*. Transfer 25.0 mL of the solution to a 500 mL conical flask and dilute to 200 mL with *water R*. Add about 50 mg of *xylenol orange triturate R* and *hexamethylenetetramine R* until the solution becomes violet-pink. Add 2 g of *hexamethylenetetramine R* in excess. Titrate with the sodium edetate solution until the violet-pink colour changes to yellow.

1 mL of *0.02 M sodium edetate* is equivalent to 1.308 mg of Zn.

1 M Sodium hydroxide. *3006300.*

Dissolve 42 g of *sodium hydroxide R* in *carbon dioxide-free water R* and dilute to 1000.0 mL with the same solvent.

Standardisation. Titrate 20.0 mL of the sodium hydroxide solution with *1 M hydrochloric acid* using the indicator prescribed in the assay in which *1 M sodium hydroxide* is used.

If sodium hydroxide free from carbonate is prescribed, prepare it as follows. Dissolve *sodium hydroxide R* in *water R* to give a concentration of 400-600 g/L and allow to stand. Decant the clear supernatant, taking precautions to avoid the introduction of carbon dioxide, and dilute with *carbon dioxide-free water R* to the required molarity. The solution complies with the following test. Titrate 20.0 mL of hydrochloric acid of the same molarity with the solution of sodium hydroxide, using 0.5 mL of *phenolphthalein solution R* as indicator. At the end-point add just sufficient of the acid to discharge the pink colour and concentrate the solution to 20 mL by boiling. During boiling add just sufficient acid to discharge the pink colour, which should not reappear after prolonged boiling. The volume of acid used does not exceed 0.1 mL.

0.1 M Sodium hydroxide. *3006600.*

Dilute 100.0 mL of *1 M sodium hydroxide* to 1000.0 mL with *carbon dioxide-free water R*.

Standardisation. Titrate 20.0 mL of the sodium hydroxide solution with *0.1 M hydrochloric acid*, using the end-point detection prescribed for the assay in which the *0.1 M sodium hydroxide* is used.

Standardisation (for use in the assay of halide salts of organic bases). Dissolve 0.100 g of *benzoic acid RV* in a mixture of 5 mL of *0.01 M hydrochloric acid* and 50 mL of *ethanol (96 per cent) R*. Carry out the titration (*2.2.20*), using the sodium hydroxide solution. Note the volume added between the 2 points of inflexion.

1 mL of *0.1 M sodium hydroxide* is equivalent to 12.21 mg of $C_7H_6O_2$.

0.1 M Sodium hydroxide, ethanolic. *3007000.*

To 250 mL of *anhydrous ethanol R* add 3.3 g of *strong sodium hydroxide solution R*.

Standardisation. Dissolve 0.100 g of *benzoic acid RV* in 2 mL of *water R* and 10 mL of *ethanol (96 per cent) R*. Titrate with the ethanolic sodium hydroxide solution, using 0.2 mL of *thymolphthalein solution R* as indicator. Standardise immediately before use.

1 mL of *0.1 M ethanolic sodium hydroxide* is equivalent to 12.21 mg of $C_7H_6O_2$.

0.1 M Sodium methoxide. *3007100.*

Cool 175 mL of *anhydrous methanol R* in iced *water R* and add, in small portions, about 2.5 g of freshly cut *sodium R*. When the metal has dissolved, dilute to 1000.0 mL with *toluene R*.

Standardisation. To 10 mL of *dimethylformamide R* add 0.05 mL of a 3 g/L solution of *thymol blue R* in *methanol R*, and titrate with the sodium methoxide solution until a pure blue colour is obtained. Immediately add 0.200 g of *benzoic acid RV*. Stir to effect solution and titrate with the sodium methoxide solution until the pure blue colour is again obtained. Protect the solution from atmospheric carbon dioxide throughout the titration. From the volume of titrant used in the second titration ascertain the exact strength of the sodium methoxide solution. Standardise immediately before use.

1 mL of *0.1 M sodium methoxide* is equivalent to 12.21 mg of $C_7H_6O_2$.

0.1 M Sodium nitrite. *3007200.*

Dissolve 7.5 g of *sodium nitrite R* in *water R* and dilute to 1000.0 mL with the same solvent.

Standardisation. Dissolve 0.300 g of *sulfanilic acid RV* in 50 mL of *dilute hydrochloric acid R* and carry out the determination of primary aromatic amino-nitrogen (*2.5.8*), using the sodium nitrite solution and determining the end-point electrometrically. Standardise immediately before use.

1 mL of *0.1 M sodium nitrite* is equivalent to 17.32 mg of $C_6H_7NO_3S$.

0.1 M Sodium periodate. *3009500.*

Dissolve 21.4 g of *sodium periodate R* in about 500 mL of *water R* and dilute to 1000.0 mL with the same solvent.

Standardisation. In a stoppered flask, introduce 20.0 mL of the sodium periodate solution and add 5 mL of *perchloric acid R*. Close the flask and shake. Adjust the solution to pH 6.4 using a saturated solution of *sodium hydrogen carbonate R*. Add 10 mL of *potassium iodide solution R*, close, shake and allow to stand for 2 min. Titrate with *0.025 M sodium arsenite* until the yellow colour almost disappears. Add 2 mL of *starch solution R* and titrate slowly until the colour is completely discharged.

0.1 M Sodium thiosulfate. *3007300.*

Dissolve 25 g of *sodium thiosulfate R* and 0.2 g of *sodium carbonate R* in *carbon dioxide-free water R* and dilute to 1000.0 mL with the same solvent.

Standardisation. To 10.0 mL of *0.033 M potassium bromate*, add 40 mL of *water R*, 10 mL of *potassium iodide solution R* and 5 mL of *hydrochloric acid R1*. Titrate with the sodium thiosulfate solution, using 1 mL of *starch solution R*, added towards the end of the titration, as indicator.

0.5 M Sulfuric acid. *3007800.*

Dissolve 28 mL of sulfuric acid R in *water R* and dilute to 1000.0 mL with the same solvent.

Standardisation. Dissolve 1.000 g of *sodium carbonate RV* in 50 mL of *water R*, add 0.1 mL of *methyl orange solution R*, and titrate with the sulfuric acid until the solution begins to turn reddish-yellow. Boil for about 2 min. The colour of the solutions reverts to yellow. Cool and titrate again until the reddish-yellow colour reappears.

1 mL of *0.5 M sulfuric acid* is equivalent to 53.00 mg of Na_2CO_3.

0.05 M Sulfuric acid. *3008000.*

Dilute 100.0 mL of *0.5 M sulfuric acid* to 1000.0 mL with *water R*.

Standardisation. Carry out the titration described for *0.5 M sulfuric acid*, using 0.100 g of *sodium carbonate RV*, dissolved in 20 mL of *water R*.

1 mL of *0.05 M sulfuric acid* is equivalent to 5.30 mg of Na_2CO_3.

0.1 M Tetrabutylammonium hydroxide. *3008300.*

Dissolve 40 g of *tetrabutylammonium iodide R* in 90 mL of *anhydrous methanol R*, add 20 g of finely powdered *silver oxide R* and shake vigorously for 1 h. Centrifuge a few millilitres of the mixture and test the supernatant for iodides. If a positive reaction is obtained, add an additional 2 g of *silver oxide R* and shake for a further 30 min. Repeat this procedure until the liquid is free from iodides, filter the mixture through a fine sintered-glass filter (*2.1.2*) and rinse the reaction vessel and filter with three quantities, each of 50 mL, of *toluene R*. Add the washings to the filtrate and dilute to 1000.0 mL with *toluene R*. Pass dry carbon dioxide-free nitrogen through the solution for 5 min.

Standardisation. To 10 mL of *dimethylformamide R* add 0.05 mL of a 3 g/L solution of *thymol blue R* in *methanol R* and titrate with the tetrabutylammonium hydroxide solution until a pure blue colour is obtained. Immediately add 0.200 g of *benzoic acid RV*. Stir to effect solution, and titrate with the tetrabutylammonium hydroxide solution until the pure blue colour is again obtained. Protect the solution from atmospheric carbon dioxide throughout the titration. From the volume of titrant used in the second titration ascertain the exact strength of the tetrabutylammonium hydroxide solution. Standardise immediately before use.

1 mL of *0.1 M tetrabutylammonium hydroxide* is equivalent to 12.21 mg of $C_7H_6O_2$.

0.1 M Tetrabutylammonium hydroxide in 2-propanol. *3008400.*

Prepare as described for *0.1 M tetrabutylammonium hydroxide* using *2-propanol R* instead of *toluene R* and standardise as described.

0.05 M Zinc chloride. *3008500.*

Dissolve 6.82 g of *zinc chloride R*, weighed with appropriate precautions, in *water R*. If necessary, add dropwise *dilute hydrochloric acid R* until the opalescence disappears. Dilute to 1000.0 mL with *water R*.

Standardisation. To 20.0 mL of the zinc chloride solution add 5 mL of *dilute acetic acid R* and carry out the determination of zinc by complexometry (*2.5.11*).

0.1 M Zinc sulfate. *3008600.*

Dissolve 29 g of *zinc sulfate R* in *water R* and dilute to 1000.0 mL with the same solvent.

Standardisation. To 20.0 mL of the zinc sulfate solution add 5 mL of *dilute acetic acid R* and carry out the determination of zinc by complexometry (*2.5.11*).

5.1. GENERAL TEXTS ON MICROBIOLOGY

01/2008:50101

5.1.1. METHODS OF PREPARATION OF STERILE PRODUCTS

Sterility is the absence of viable micro-organisms. The sterility of a product cannot be guaranteed by testing; it has to be assured by the application of a suitably validated production process. It is essential that the effect of the chosen sterilisation procedure on the product (including its final container or package) is investigated to ensure effectiveness and the integrity of the product and that the procedure is validated before being applied in practice. It is recommended that the choice of the container is such as to allow the optimum sterilisation to be applied. Failure to follow meticulously a validated process involves the risk of a non-sterile product or of a deteriorated product. Revalidation is carried out whenever major changes in the sterilisation procedure, including changes in the load, take place. It is expected that the principles of good manufacturing practice (as described in, for example, the European Community Guide to GMP) will have been observed in the design of the process including, in particular, the use of:

- qualified personnel with appropriate training,
- adequate premises,
- suitable production equipment, designed for easy cleaning and sterilisation,
- adequate precautions to minimise the bioburden prior to sterilisation,
- validated procedures for all critical production steps,
- environmental monitoring and in-process testing procedures.

The precautions necessary to minimise the pre-sterilisation bioburden include the use of components with an acceptable low degree of microbial contamination. Microbiological monitoring and setting of suitable action limits may be advisable for ingredients which are liable to be contaminated because of their origin, nature or method of preparation.

The methods described here apply mainly to the inactivation or removal of bacteria, yeasts and moulds. For biological products of animal or human origin or in cases where such material has been used in the production process, it is necessary during validation to demonstrate that the process is capable of the removal or inactivation of relevant viral contamination. Guidance on this aspect is provided in, for example, the appropriate European Community Notes for Guidance.

Wherever possible, a process in which the product is sterilised in its final container (terminal sterilisation) is chosen. When a fully validated terminal sterilisation method by steam, dry heat or ionising radiation is used, parametric release, that is the release of a batch of sterilised items based on process data rather than on the basis of submitting a sample of the items to sterility testing, may be carried out, subject to the approval of the competent authority.

If terminal sterilisation is not possible, filtration through a bacteria-retentative filter or aseptic processing is used; wherever possible, appropriate additional treatment of the product (for example, heating of the product) in its final container is applied. In all cases, the container and closure are required to maintain the sterility of the product throughout its shelf-life.

Sterility Assurance Level (SAL)

Where appropriate reference is made within the methods described below, to a "sterility assurance level" or "SAL". The achievement of sterility within any one item in a population of items submitted to a sterilisation process cannot be guaranteed nor can it be demonstrated. The inactivation of micro-organisms by physical or chemical means follows an exponential law; thus there is always a finite statistical probability that a micro-organism may survive the sterilising process. For a given process, the probability of survival is determined by the number, types and resistance of the micro-organisms present and by the environment in which the organisms exist during treatment. The SAL of a sterilising process is the degree of assurance with which the process in question renders a population of items sterile. The SAL for a given process is expressed as the probability of a non-sterile item in that population. An SAL of 10^{-6}, for example, denotes a probability of not more than one viable micro-organism in 1×10^6 sterilised items of the final product. The SAL of a process for a given product is established by appropriate validation studies.

METHODS AND CONDITIONS OF STERILISATION

Sterilisation may be carried out by one of the methods described below. Modifications to, or combinations of, these methods may be used provided that the chosen procedure is validated both with respect to its effectiveness and the integrity of the product including its container or package.

For all methods of sterilisation the critical conditions of the operation are monitored in order to confirm that the previously determined required conditions are achieved throughout the batch during the whole sterilisation process This applies in all cases including those where the reference conditions are used.

TERMINAL STERILISATION

For terminal sterilisation it is essential to take into account the non-uniformity of the physical and, where relevant, chemical conditions within the sterilising chamber. The location within the sterilising chamber that is least accessible to the sterilising agent is determined for each loading configuration of each type and size of container or package (for example, the coolest location in an autoclave). The minimum lethality delivered by the sterilising cycle and the reproducibility of the cycle are also determined in order to ensure that all loads will consistently receive the specified treatment.

Having established a terminal sterilisation process, knowledge of its performance in routine use is gained wherever possible, by monitoring and suitably recording the physical and, where relevant, chemical conditions achieved within the load in the chamber throughout each sterilising cycle.

Steam sterilisation (Heating in an autoclave). Sterilisation by saturated steam under pressure is preferred, wherever applicable, especially for aqueous preparations. For this method of terminal sterilisation the reference for aqueous preparations are at a minimum of 121 °C for 15 min. Other of time and temperature may be used provided that it has been satisfactorily demonstrated that the process chosen delivers an adequate and reproducible level of lethality when operating routinely within the established tolerances. The procedures and precautions employed are such, as to give an SAL of 10^{-6} or better. Guidance concerning validation by means of the F_0 concept is provided below (*5.1.5*).

Knowledge of the physical conditions (temperature and pressure) within the autoclave chamber during the sterilisation procedure is obtained. The temperature is usually measured by means of temperature-sensing elements inserted into representative containers together with additional elements at the previously established coolest part of the loaded chamber. The conditions throughout each cycle are suitably recorded, for example, as a temperature-time chart, or by any other suitable means.

Where a biological assessment is carried out, this is obtained using a suitable biological indicator (*5.1.2*).

Dry sterilisation. For this method of terminal sterilisation the reference conditions are a minimum of 160 °C for at least 2 h. Other combinations of time and temperature

may be used provided that it has been satisfactorily demonstrated that the process chosen delivers an adequate and reproducible level of lethality when operated routinely within the established tolerances. The procedures and precautions employed are such as to give an SAL of 10^{-6} or better.

Dry heat sterilisation is carried out in an oven equipped with forced air circulation or other equipment specially designed for the purpose. The steriliser is loaded in such a way that a uniform temperature is achieved throughout the load. Knowledge of the temperature within the steriliser during the sterilisation procedure is usually obtained by means of temperature-sensing elements inserted into representative containers together with additional elements at the previously established coolest part of the loaded steriliser. The temperature throughout each cycle is suitably recorded.

Where a biological assessment is carried out, this is obtained using a suitable biological indicator (*5.1.2*).

Dry heat at temperatures greater than 220 °C is frequently used for sterilisation and depyrogenation of glassware. In this case demonstration of a 3 $\log_{10}$ reduction in heat resistant endotoxin can be used as a replacement for biological indicators (*5.1.2*).

Ionising radiation sterilisation. Sterilisation by this method is achieved by exposure of the product to ionising radiation in the form of gamma radiation from a suitable radioisotopic source (such as cobalt 60) or of a beam of electrons energised by a suitable electron accelerator.

In some countries there are regulations that lay down rules for the use of ionising radiation for sterilisation purposes, for example, in the appropriate European Community Notes for Guidance.

For this method of terminal sterilisation the reference absorbed dose is 25 kGy. Other doses may be used provided that it has satisfactorily been demonstrated that the dose chosen delivers an adequate and reproducible level of lethality when the process is operated routinely within the established tolerances. The procedures and precautions employed are such as to give an SAL of 10^{-6} or better.

During the sterilisation procedure the radiation absorbed by the product is monitored regularly by means of established dosimetry procedures that are independent of dose rate. Dosimeters are calibrated against a standard source at a reference radiation plant on receipt from the supplier and at suitable intervals of not longer than one year thereafter.

Where a biological assessment is carried out, this is obtained using a suitable biological indicator (*5.1.2*).

Gas sterilisation. This method of sterilisation is only to be used where there is no suitable alternative. It is essential that penetration by gas and moisture into the material to be sterilised is ensured and that it is followed by a process of elimination of the gas under conditions that have been previously established to ensure that any residue of gas or its transformation products in the sterilised product is below the concentration that could give rise to toxic effects during use of the product. Guidance on this aspect with respect to the use of ethylene oxide is provided, for example, in the appropriate European Community Notes for Guidance.

Wherever possible, the gas concentration, relative humidity, temperature and duration of the process are measured and recorded. Measurements are made where sterilisation conditions are least likely to be achieved, as determined at validation.

The effectiveness of the process applied to each sterilisation load is checked using a suitable biological indicator (*5.1.2*).

A suitable sample of each batch is tested for sterility (*2.6.1*) before the batch is released.

FILTRATION

Certain active ingredients and products that cannot be terminally sterilised may be subjected to a filtration procedure using a filter of a type that has been demonstrated to be satisfactory by means of a microbial challenge test using a suitable test micro-organism. A suspension of *Pseudomonas diminuta* (ATCC 19146, NCIMB 11091 or CIP 103020) may be suitable. It is recommended that a challenge of at least 10^7 CFU per cm^2 of active filter surface is used and that the suspension is prepared in tryptone soya broth which, after passage throug the filter, is collected aseptically and incubated aerobically at 32 °C. Such products need special precautions. The production process and environment are designed to minimise microbial contamination and are regularly subjected to appropriate monitoring procedures. The equipment, containers and closures and, wherever possible, the ingredients are subjected to an appropriate sterilisation process. It is recommended that the filtration process is carried out as close as possible to the filling point. The operations following filtration are carried out under aseptic conditions.

Solutions are passed through a bacteria-retentive membrane with a nominal pore size of 0.22 µm or less or any other type of filter known to have equivalent properties of bacteria retention. Appropriate measures are taken to avoid loss of solute by adsorption on to the filter and to avoid the release of contaminants from the filter. Attention is given to the bioburden prior to filtration, filter capacity, batch size and duration of filtration. The filter is not used for a longer period than has been approved by validation of the combination of the filter and the product in question.

The integrity of an assembled sterilising filter is verified before use and confirmed after use by carrying out tests appropriate to the type of filter used and the stage of testing, for example bubble-point, pressure hold or diffusion rate tests.

Due to the potential additional risks of the filtration method as compared with other sterilisation processes, a prefiltration through a bacteria-retentative filter may be advisable in cases where a low bioburden cannot be ensured by other means.

ASEPTIC PREPARATION

The objective of aseptic processing is to maintain the sterility of a product that is assembled from components, each of which has been sterilised by one of the above methods. This is achieved by using conditions and facilities designed to prevent microbial contamination. Aseptic processing may include aseptic filling of products into container/closure systems, aseptic blending of formulations followed by aseptic filling and aseptic packaging.

In order to maintain the sterility of the components and the product during processing, careful attention needs to be given to:

- environment,
- personnel,
- critical surfaces,
- container/closure sterilisation and transfer procedures,
- maximum holding period of the product before filling into the final container.

Process validation includes appropriate checks on all the above and checks on the process are regularly carried out by means of process simulation tests using microbial growth media which are then incubated and examined for microbial contamination (media fill tests). In addition, a suitable sample of each batch of any product that is sterilised by filtration and/or aseptically processed is tested for sterility (*2.6.1*) before the batch is released.

01/2011:50102

5.1.2. BIOLOGICAL INDICATORS OF STERILISATION

Biological indicators are standardised preparations of selected micro-organisms used to assess the effectiveness of a sterilisation procedure. They usually consist of a population of bacterial spores placed on a suitable inert

carrier. The inoculated carrier is covered in such a way that it is protected from any deterioration or contamination, while allowing the sterilising agent to enter into contact with the micro-organisms. Spore suspensions may be presented in sealed ampoules. Biological indicators are prepared in such a way that they can be stored under defined conditions; an expiry date is set.

Micro-organisms of the same bacterial species as the bacteria used to manufacture the biological indicators may be inoculated directly into a liquid product to be sterilised or into a liquid product similar to that to be sterilised. In this case, it must be demonstrated that the liquid product has no inhibiting effect on the spores used, especially as regards their germination.

A biological indicator is characterised by the name of the species of bacterium used as the reference micro-organism, the number of the strain in the original collection, the number of viable spores per carrier and the *D*-value. The *D*-value is the value of a parameter of sterilisation (duration or absorbed dose) required to reduce the number of viable organisms to 10 per cent of the original number. It is of significance only under precisely defined experimental conditions. Only the stated micro-organisms are present. Biological indicators consisting of more than one species of bacteria on the same carrier may be used. Information on the culture medium and the incubation conditions is supplied.

It is recommended that the indicator organisms are placed at the locations presumed, or wherever possible, found by previous physical measurement to be least accessible to the sterilising agent. After exposure to the sterilising agent, aseptic technique is used to transfer carriers of spores to the culture media, so that no contamination is present at the time of examination. Biological indicators that include an ampoule of culture medium placed directly in the packaging protecting the inoculated carrier may be used.

A choice of indicator organisms is made such that:

a) the resistance of the test strain is suitable for the particular sterilisation method and is great compared to the resistance of micro-organisms potentially contaminating the product;

b) the test strain is non-pathogenic;

c) the test strain is easy to culture.

After incubation, growth of the reference micro-organisms subjected to a sterilisation procedure indicates that the procedure has been unsatisfactory.

Steam sterilisation. The use of biological indicators intended for steam sterilisation is recommended for the validation of sterilisation cycles. Spores of *Geobacillus stearothermophilus* (for example, ATCC 7953, NCTC 10007, NCIMB 8157 or CIP 52.81) or other strains of micro-organisms having demonstrated equivalent performance are recommended. The number of viable spores exceeds 5×10^5 per carrier. The *D*-value at 121 °C is not less than 1.5 min. It is verified that exposing the biological indicators to steam at 121 ± 1 °C for 6 min leaves revivable spores, and that there is no growth of the reference micro-organisms after the biological indicators have been exposed to steam at 121 ± 1 °C for 15 min.

Dry-heat sterilisation. Spores of *Bacillus atrophaeus* (for example, ATCC 9372, NCIMB 8058 or CIP 77.18) or other strains of micro-organisms having demonstrated equivalent performance are recommended for the preparation of biological indicators. The number of viable spores exceeds 1×10^6 per carrier and the *D*-value at 160 °C is not less than 2.5 min. Dry heat at temperatures greater than 220 °C is frequently used for sterilisation and depyrogenation of glassware. In this case, demonstration of a 3 $\log_{10}$ reduction in heat-resistant bacterial endotoxin can be used as a replacement for biological indicators.

Ionising radiation sterilisation. Biological indicators may be used to monitor routine operations, as an additional possibility to assess the effectiveness of the set dose of radiation energy, especially in the case of accelerated electron sterilisation. The spores of *Bacillus pumilus* (for example, ATCC 27142, NCTC 10327, NCIMB 10692 or CIP 77.25) or other strains of micro-organisms having demonstrated equivalent performance are recommended. The number of viable spores exceeds 1×10^7 per carrier. The *D*-value is not less than 1.9 kGy. It is verified that there is no growth of the reference micro-organisms after the biological indicators have been exposed to 25 kGy (minimum absorbed dose).

Gas sterilisation. The use of biological indicators is necessary for all gas sterilisation procedures, both for the validation of the cycles and for routine operations. Gas sterilisation is widely used for medical devices, isolators, chambers, etc. Use for such purposes is outside the scope of the European Pharmacopoeia. The use of spores of *Bacillus atrophaeus* (for example, ATCC 9372, NCIMB 8058 or CIP 77.18) or other strains of micro-organisms having demonstrated equivalent performance is recommended for ethylene oxide. The number of viable spores exceeds 1×10^6 per carrier. The parameters of resistance are the following: the *D*-value is not less than 2.5 min for a test cycle involving 600 mg/L of ethylene oxide, at 54 °C and at 60 per cent relative humidity. It is verified that there is no growth of the reference micro-organisms after the biological indicators have been exposed to the test cycle described above for 25 min and that exposing the indicators to a reduced temperature cycle (600 mg/L, 30 °C and 60 per cent relative humidity) for 50 min leaves revivable spores.

01/2011:50103

5.1.3. EFFICACY OF ANTIMICROBIAL PRESERVATION

If a pharmaceutical preparation does not itself have adequate antimicrobial activity, antimicrobial preservatives may be added, particularly to aqueous preparations, to prevent proliferation or to limit microbial contamination which, during normal conditions of storage and use, particularly for multidose containers, could occur in a product and present a hazard to the patient from infection and spoilage of the preparation. Antimicrobial preservatives must not be used as a substitute for good manufacturing practice.

The efficacy of an antimicrobial preservative may be enhanced or diminished by the active constituent of the preparation or by the formulation in which it is incorporated or by the container and closure used. The antimicrobial activity of the preparation in its final container is investigated over the period of validity to ensure that such activity has not been impaired by storage. Such investigations may be carried out on samples removed from the final container immediately prior to testing.

During development of a pharmaceutical preparation, it shall be demonstrated that the antimicrobial activity of the preparation as such or, if necessary, with the addition of a suitable preservative or preservatives provides adequate protection from adverse effects that may arise from microbial contamination or proliferation during storage and use of the preparation.

The efficacy of the antimicrobial activity may be demonstrated by the test described below. The test is not intended to be used for routine control purposes.

TEST FOR EFFICACY OF ANTIMICROBIAL PRESERVATION

The test consists of challenging the preparation, wherever possible in its final container, with a prescribed inoculum of suitable micro-organisms, storing the inoculated preparation at a prescribed temperature, withdrawing samples from the container at specified intervals of time and counting the organisms in the samples so removed.

The preservative properties of the preparation are adequate if, in the conditions of the test, there is a significant fall or no increase, as appropriate, in the number of micro-organisms in the inoculated preparation after the times and at the temperatures prescribed. The acceptance criteria, in terms of decrease in the number of micro-organisms with time, vary for different types of preparations according to the degree of protection intended (see Tables 5.1.3.-1/2/3).

Test micro-organisms

Pseudomonas aeruginosa	ATCC 9027; NCIMB 8626; CIP 82.118.
Staphylococcus aureus	ATCC 6538; NCTC 10788; NCIMB 9518; CIP 4.83.
Candida albicans	ATCC 10231; NCPF 3179; IP 48.72.
Aspergillus brasiliensis	ATCC 16404; IMI 149007; IP 1431.83.

Single-strain challenges are used and the designated micro-organisms are supplemented, where appropriate, by other strains or species that may represent likely contaminants to the preparation. It is recommended, for example, that *Escherichia coli* (ATCC 8739; NCIMB 8545; CIP 53.126) is used for all oral preparations and *Zygosaccharomyces rouxii* (NCYC 381; IP 2021.92) for oral preparations containing a high concentration of sugar.

Preparation of inoculum

Preparatory to the test, inoculate the surface of casein soya bean digest agar (*2.6.12*) for bacteria or Sabouraud-dextrose agar without the addition of antibiotics (*2.6.12*) for fungi, with the recently grown stock culture of each of the specified micro-organisms. Incubate the bacterial cultures at 30-35 °C for 18-24 h, the culture of *C. albicans* at 20-25 °C for 48 h, and the culture of *A. brasiliensis* at 20-25 °C for 1 week or until good sporulation is obtained. Subcultures may be needed after revival before the micro-organism is in its optimal state, but it is recommended that their number be kept to a minimum.

To harvest the bacterial and *C. albicans* cultures, use a sterile suspending fluid, containing 9 g/L of *sodium chloride R*, for dispersal and transfer of the surface growth into a suitable vessel. Add sufficient suspending fluid to reduce the microbial count to about 10^8 micro-organisms per millilitre. To harvest the *A. brasiliensis* culture, use a sterile suspending fluid containing 9 g/L of *sodium chloride R* and 0.5 g/L of *polysorbate 80 R* and adjust the spore count to about 10^8 per millilitre by adding the same solution.

Remove immediately a suitable sample from each suspension and determine the number of colony-forming units per millilitre in each suspension by plate count or membrane filtration (*2.6.12*). This value serves to determine the inoculum and the baseline to use in the test. The suspensions shall be used immediately.

METHOD

To count the viable micro-organisms in the inoculated products, use the agar medium used for the initial cultivation of the respective micro-organisms.

Inoculate a series of containers of the product to be examined, each with a suspension of one of the test organisms to give an inoculum of 10^5 to 10^6 micro-organisms per millilitre or per gram of the preparation. The volume of the suspension of inoculum does not exceed 1 per cent of the volume of the product. Mix thoroughly to ensure homogeneous distribution.

Maintain the inoculated product at 20-25 °C, protected from light. Remove a suitable sample from each container, typically 1 mL or 1 g, at zero hour and at appropriate intervals according to the type of the product and determine the number of viable micro-organisms by plate count or membrane filtration (*2.6.12*). Ensure that any residual antimicrobial activity of the product is eliminated by dilution, by filtration or by the use of a specific inactivator. When dilution procedures are used, due allowance is made for the reduced sensitivity in the recovery of small numbers of viable micro-organisms. When a specific inactivator is used, the ability of the system to support the growth of the test organisms is confirmed by the use of appropriate controls.

The procedure is validated to verify its ability to demonstrate the required reduction in count of viable micro-organisms.

ACCEPTANCE CRITERIA

The criteria for evaluation of antimicrobial activity are given in Tables 5.1.3.-1/2/3 in terms of the $\log_{10}$ reduction in the number of viable micro-organisms against the value obtained for the inoculum.

Table 5.1.3.-1. - *Parenteral preparations, eye preparations, intrauterine preparations and intramammary preparations*

		$\log_{10}$ reduction				
		6 h	24 h	7 d	14 d	28 d
Bacteria	A	2	3	-	-	NR
	B	-	1	3	-	NI
Fungi	A	-	-	2	-	NI
	B	-	-	-	1	NI

NR: no recovery.
NI: no increase in number of viable micro-organisms compared to the previous reading.

The A criteria express the recommended efficacy to be achieved. In justified cases where the A criteria cannot be attained, for example for reasons of an increased risk of adverse reactions, the B criteria must be satisfied.

Table 5.1.3.-2. - *Ear preparations, nasal preparations, preparations for cutaneous application and preparations for inhalation*

		$\log_{10}$ reduction			
		2 d	7 d	14 d	28 d
Bacteria	A	2	3	-	NI
	B	-	-	3	NI
Fungi	A	-	-	2	NI
	B	-	-	1	NI

NI: no increase in number of viable micro-organisms compared to the previous reading.

The A criteria express the recommended efficacy to be achieved. In justified cases where the A criteria cannot be attained, for example for reasons of an increased risk of adverse reactions, the B criteria must be satisfied.

Table 5.1.3.-3. - *Oral preparations, oromucosal preparations and rectal preparations*

	$\log_{10}$ reduction	
	14 d	28 d
Bacteria	3	NI
Fungi	1	NI

NI: no increase in number of viable micro-organisms compared to the previous reading.

The above criteria express the recommended efficacy to be achieved.

01/2014:50104

5.1.4. MICROBIOLOGICAL QUALITY OF NON-STERILE PHARMACEUTICAL PREPARATIONS AND SUBSTANCES FOR PHARMACEUTICAL USE[(1)]

The presence of certain micro-organisms in non-sterile preparations may have the potential to reduce or even inactivate the therapeutic activity of the product and has a potential to adversely affect the health of the patient. Manufacturers therefore have to ensure a low bioburden of finished dosage forms by implementing current guidelines on Good Manufacturing Practice during the manufacture, storage and distribution of pharmaceutical preparations.

Microbial examination of non-sterile products is performed according to the methods given in general chapters *2.6.12* and *2.6.13*. Acceptance criteria for non-sterile pharmaceutical products based upon the total aerobic microbial count (TAMC) and the total combined yeasts/moulds count (TYMC) are given in Tables 5.1.4.-1 and 5.1.4.-2. Acceptance criteria are based on individual results or on the average of replicate counts when replicate counts are performed (e.g. direct plating methods).

When an acceptance criterion for microbiological quality is prescribed it is interpreted as follows:

- 10^1 CFU: maximum acceptable count = 20;
- 10^2 CFU: maximum acceptable count = 200;
- 10^3 CFU: maximum acceptable count = 2000, and so forth.

Table 5.1.4.-1 includes a list of specified micro-organisms for which acceptance criteria are set. The list is not necessarily exhaustive and for a given preparation it may be necessary to test for other micro-organisms depending on the nature of the starting materials and the manufacturing process.

If it has been shown that none of the prescribed tests will allow valid enumeration of micro-organisms at the level prescribed, a validated method with a limit of detection as close as possible to the indicated acceptance criterion is used.

In addition to the micro-organisms listed in Table 5.1.4.-1, the significance of other micro-organisms recovered is evaluated in terms of:

- use of the product: hazard varies according to the route of administration (eye, nose, respiratory tract);
- nature of the product: its ability to support growth, the presence of adequate antimicrobial preservation;
- method of application;
- intended recipient: risk may differ for neonates, infants, the debilitated;
- use of immunosuppressive agents, corticosteroids;
- presence of disease, wounds, organ damage.

Where warranted, a risk-based assessment of the relevant factors is conducted by personnel with specialised training in microbiology and the interpretation of microbiological data. For raw materials, the assessment takes account of processing to which the product is subjected, the current technology of testing and the availability of materials of the desired quality.

Table 5.1.4.-2. – *Acceptance criteria for microbiological quality of non-sterile substances for pharmaceutical use*

	TAMC (CFU/g or CFU/mL)	TYMC (CFU/g or CFU/mL)
Substances for pharmaceutical use	10^3	10^2

♦*Recommended acceptance criteria for microbiological quality of herbal medicinal products for oral use and extracts used in their preparation are given in general chapter 5.1.8.*♦

Table 5.1.4.-1. – *Acceptance criteria for microbiological quality of non-sterile dosage forms*

Route of administration	TAMC (CFU/g or CFU/mL)	TYMC (CFU/g or CFU/mL)	Specified micro-organisms
Non-aqueous preparations for oral use	10^3	10^2	Absence of *Escherichia coli* (1 g or 1 mL)
Aqueous preparations for oral use	10^2	10^1	Absence of *Escherichia coli* (1 g or 1 mL)
Rectal use	10^3	10^2	-
Oromucosal use Gingival use Cutaneous use Nasal use Auricular use	10^2	10^1	Absence of *Staphylococcus aureus* (1 g or 1 mL) Absence of *Pseudomonas aeruginosa* (1 g or 1 mL)
Vaginal use	10^2	10^1	Absence of *Pseudomonas aeruginosa* (1 g or 1 mL) Absence of *Staphylococcus aureus* (1 g or 1 mL) Absence of *Candida albicans* (1 g or 1 mL)
Transdermal patches (limits for one patch including adhesive layer and backing)	10^2	10^1	Absence of *Staphylococcus aureus* (1 patch) Absence of *Pseudomonas aeruginosa* (1 patch)
Inhalation use (special requirements apply to liquid preparations for nebulisation)	10^2	10^1	Absence of *Staphylococcus aureus* (1 g or 1 mL) Absence of *Pseudomonas aeruginosa* (1 g or 1 mL) Absence of bile-tolerant gram-negative bacteria (1 g or 1 mL)
♦Special Ph. Eur. provision for oral dosage forms containing raw materials of natural (animal, vegetal or mineral) origin for which antimicrobial pretreatment is not feasible and for which the competent authority accepts TAMC of the raw material exceeding 10^3 CFU/g or CFU/mL.	10^4	10^2	Not more than 10^2 CFU of bile-tolerant gram-negative bacteria (1 g or 1 mL) Absence of *Salmonella* (10 g or 10 mL) Absence of *Escherichia coli* (1 g or 1 mL) Absence of *Staphylococcus aureus* (1 g or 1 mL)♦
♦Special Ph. Eur. provision for premixes for medicated feeding stuffs for veterinary use using excipients of plant origin for which antimicrobial treatment is not feasible.	10^5	10^4	Not more than 10^4 CFU of bile-tolerant gram-negative bacteria (1 g or 1 mL) Absence of *Escherichia coli* (1 g or 1 mL) Absence of *Salmonella* (25 g or 25 mL)♦

(1) This chapter has undergone pharmacopoeial harmonisation. See chapter *5.8. Pharmacopoeial harmonisation*.

01/2009:50105

5.1.5. APPLICATION OF THE F_0 CONCEPT TO STEAM STERILISATION OF AQUEOUS PREPARATIONS

The following chapter is published for information.

The F_0 value of a saturated steam sterilisation process is the lethality expressed in terms of the equivalent time in minutes at a temperature of 121 °C delivered by the process to the product in its final container with reference to micro-organisms possessing a theoretical *Z*-value of 10.

The total F_0 of a process takes account of the heating up and cooling down phases of the cycle and can be calculated by integration of lethal rates with respect to time at discrete temperature intervals.

When a steam sterilisation cycle is chosen on the basis of the F_0 concept, great care must be taken to ensure that an adequate assurance of sterility is consistently achieved. In addition to validating the process, it may also be necessary to perform continuous, rigorous microbiological monitoring during routine production to demonstrate that the microbiological parameters are within the established tolerances so as to give an SAL of 10^{-6} or better.

In connection with sterilisation by steam, the *Z*-value relates the heat resistance of a micro-organism to changes in temperature. The *Z*-value is the change in temperature required to alter the *D*-value by a factor of 10.

The *D*-value (or decimal reduction value) is the value of a parameter of sterilisation (duration or absorbed dose) required to reduce the number of viable organisms to 10 per cent of the original number. It is only of significance under precisely defined experimental conditions.

The following mathematical relationships apply:

$$F_0 = D_{121}\,(\log N_0 - \log N) = D_{121} \log IF$$

D_{121} = *D*-value of the reference spores (*5.1.2*) at 121 °C;

N_0 = initial number of viable micro-organisms;

N = final number of viable micro-organisms;

IF = inactivation factor.

$$Z = \frac{T_2 - T_1}{\log D_1 - \log D_2}$$

D_1 = *D*-value of the micro-organism at temperature T_1;

D_2 = *D*-value of the micro-organism at temperature T_2.

$$IF = \frac{N_0}{N} = 10^{t/D}$$

t = exposure time;

D = *D*-value of micro-organism in the exposure conditions.

01/2008:50106

5.1.6. ALTERNATIVE METHODS FOR CONTROL OF MICROBIOLOGICAL QUALITY

The following chapter is published for information.

1. GENERAL INTRODUCTION

The objective of this chapter is to facilitate the implementation and use of alternative microbiological methods where this can lead to cost-effective microbiological control and improved assurance for the quality of pharmaceutical products. These alternative methods may also find a place in environmental monitoring.

The microbiological methods described in the European Pharmacopoeia have been used for almost a century and these methods - for enumerating and identifying micro-organisms - still serve microbiologists well. Over the years, these methods have been invaluable to help control and secure the production of microbiologically-safe pharmaceutical products. Nevertheless conventional microbiological methods are slow, and results are not available before an incubation period of typically up to 14 days. Thus the results from the conventional microbiological methods seldom enable proactive, corrective action to be taken.

Alternative methods for control of microbiological quality have been introduced in recent years, and some of these methods have shown potential for real-time or near-real-time results with the possibility of earlier corrective action. These new methods can also offer significant improvements in the quality of testing.

In this informational chapter new microbiological methods offering pharmaceutical applications are described. For each method the basic principle is stated and the benefits and disadvantages of the method are then discussed. Potential uses describe applications that may be envisaged in view of the principles on which the method is based: it is not intended to suggest that actual application has been made. Finally, general considerations for the validation of the method are outlined. These are illustrated by specific examples for each type of method. A detailed validation protocol is given for information at the end of this chapter.

It is not the intention of this chapter to recommend one method over another, nor is it the intention to provide an exclusive or exhaustive list of alternative methods that can be used for pharmaceutical microbiological control. This informational chapter however may be used in the process of choosing an alternative microbiological method as a supplement or as an alternative to conventional microbiological approaches and to give guidance in the process of validating the chosen method. In this rapidly developing field, further methods are likely to appear. The guidance offered in this chapter may be equally applicable to these methods.

There are 3 major types of determinations specific to microbiological tests. These include:

- qualitative tests for the presence or absence of micro-organisms;
- quantitative tests for enumeration of micro-organisms;
- identification tests.

1-1. *QUALITATIVE TESTS FOR THE PRESENCE OR ABSENCE OF MICRO-ORGANISMS*

In conventional microbiological analysis this type of test is characterised by the use of turbidity or other growth-related changes in a culture medium as evidence of the presence of viable micro-organisms in the test sample. The most common example of this test is the sterility test. Other examples of this type of testing are those tests designed to evaluate the presence or absence of a particular type of viable micro-organism in a sample.

1-2. *QUANTITATIVE TESTS FOR ENUMERATION OF MICRO-ORGANISMS*

Membrane filtration and plate count methods are conventional methods used to estimate the number of viable micro-organisms present in a sample. The Most Probable Number (MPN) method is another example of these methods. MPN was developed as a means to estimate the number of viable micro-organisms present in a sample not amenable to direct plating.

1-3. *IDENTIFICATION TESTS*

Biochemical and morphological characterisation of an unknown micro-organism is the classical method of identification used in pharmacopoeial tests. Recently developed methods have streamlined and automated aspects of this identification, especially in the areas of data handling, analysis, and storage. Several new approaches that have been integrated into these methods include biochemical reactions, carbon substrate utilisation, characterisation of fatty acid composition, restriction endonuclease banding patterns and use of 16S rDNA sequence analysis.

2. GENERAL PRINCIPLES OF ALTERNATIVE METHODS

Alternative microbiological methods employ direct and indirect methods of detection; in some instances amplification of the signal is achieved by enrichment methods. In recognition of these differences, and for convenience within this chapter, alternative methods for the control of microbiological quality are divided into 3 categories:

- growth-based methods, where a detectable signal is usually achieved by a period of subculture;
- direct measurement, where individual cells are differentiated and visualised;
- cell component analysis, where the expression of specific cell components offers an indirect measure of microbial presence.

In some instances, these distinctions are artificial but they do enable a working classification to be created.

2-1. *GROWTH-BASED METHODS*

2-1-1. **Early detection of growth**

2-1-1-1. *General critical aspects of methods based on early detection of growth*

Such methods are critically dependent upon microbial growth in order to achieve a detectable number of micro-organisms. For the typically low levels of microbial contamination seen in pharmaceutical products, detection may take 24 h or even more, especially in the case of yeasts and moulds. Increased sensitivity can be achieved with filtered products. In this case, after filtration, the membrane is incubated in the medium and the result is expressed as presence or absence in the quantity corresponding to the filtered volume. These systems, because they use an incubation step in liquid media, do not offer quantitative information but a presence/absence determination in the quantity analysed. Analysis of more than one sample quantity may offer a semi-quantitative estimation (limit test). The major benefit of such methods compared to classical methods frequently resides in the capacity to process simultaneously a large number of samples and potentially to obtain a result in a shorter time.

2-1-1-2. *Electrochemical methods*

Principles of measurement. Micro-organisms multiplying and metabolising in appropriate growth media produce highly charged ionic metabolites from weakly charged organic nutrients leading to the modification of electrical properties in those media. These changes in impedance (measured by conductance or capacitance) are monitored with electrodes included in the culture vessels and in contact with the culture medium. The measurable end-point is the time taken to detect a pre-determined impedance change; the detection time is inversely proportional to the initial inoculum size. For yeasts and moulds, which produce only small changes in electrical impedance, an indirect measurement of conductance using a potassium hydroxide reservoir is commonly used. Direct measurement of capacitance can also be carried out.

Critical aspects. Automated detection with electronic data generation, mapping of the variation of impedance reflecting the growth curve of the micro-organisms, and reduction of the duration of the test to 48 h.

Potential uses. Microbiological assay of antibiotics, efficacy of antimicrobial preservation and presence/absence in the quantity of sample tested when performing total viable aerobic count.

2-1-1-3. *Measurement of consumption or production of gas*

Principles of measurement. Actively multiplying and metabolising organisms utilise appropriate growth media, leading to the production of metabolites or elimination of specific nutrients. In one approach, changes in gaseous head-space composition may be monitored in closed culture vessels by pressure transducers responding to gas production (e.g. CO_2) or gas consumption (e.g. O_2). Other indicators may be employed including colorimetric detection of CO_2.

Critical aspects. For slow-growing micro-organisms such as mycobacteria, the method offers more rapid detection. There is no direct relationship between original microbial burden and detectable end-point. The incubation temperature and the algorithm for data processing significantly affect the results.

Potential uses. Products where slow-growing micro-organisms may be present.

2-1-1-4. *Bioluminescence*

Principles of measurement. Adenosine triphosphate (ATP) is a well-documented marker of cell viability. In this method, ATP needs first to be released from micro-organisms using an appropriate extractant, followed by quantitative assay using the luciferin/luciferase enzyme system, which emits light in proportion to the ATP present. The emitted light is measured with a bioluminometer and is expressed in relative light units (RLU) for bioluminescence in liquid media. The RLU obtained from the sample is compared with a threshold value determined at 2 or 3 times the RLU of the medium used for cultivation or sample suspension. The result is positive if the RLU obtained with the analysed sample exceeds the threshold value. A modification to the method using growth of micro-organisms captured on a membrane by incubation on agar medium employs a charge coupled device (CCD) camera to detect the micro-colonies, and results are expressed as microCFU. This method is quantitative but has a narrow range of linearity.

Critical aspects. If the product sampled has a high level of bacterial contamination (about 500-1000 CFU per sample quantity tested), the detection is rapid (1 h). For low levels of contamination (less than 100 CFU per quantity of sample tested), it is necessary to increase the number of micro-organisms by an incubation step in culture media (liquid or solid agar) for 12-48 h according to the method employed. After this time, in liquid media, one single cell capable of growth will increase from 1 to 1000 and will be detected. The yield of ATP varies from one micro-organism to another, bacteria containing 1-10 fg per cell and fungi around 100 fg per cell and many other factors including the species, the growth phase of the cell, the nutritional status, the cellular stress or the cellular age could affect the ATP content of the cell. Therefore, it is not possible to obtain a count directly from the RLU value. In addition, turbidity and sample colour can affect the reaction by either enhancing the reaction and increasing the level of light output or acting as a quenching agent and lowering the level of light output. Since the reaction is enzymatically based, products which could inhibit or decrease the enzyme activity may interfere. In practice, such interference is rare but must be thoroughly investigated during the validation process. The reaction is also sensitive to the presence of phosphate nucleotides such as ADP or GTP, which interfere by producing ATP in the presence of adenylate kinase. This enzyme is used to increase the sensitivity of some bioluminescence methods: here a 3rd reagent is added containing ADP and new ATP is produced in the presence of adenylate kinase released from micro-organisms.

Potential uses. Testing for efficacy of antimicrobial preservation, presence/absence in the quantity of sample tested when performing total viable aerobic count

(bioluminescence in tube or microtitre plate), total viable aerobic count (bioluminescence on membrane), environmental and water monitoring. The method finds applications in filterable and non-filterable products.

2-1-1-5. *Microcalorimetry*

Principles of measurement. Microbial catabolism generates heat which can be accurately measured by microcalorimetry. Heat production can be detected by placing the contaminated sample in a sealed ampoule containing a growth medium and enclosing within a calorimeter. Using sensitive instrumentation microbial growth curves can be established. High bioburdens may be detectable by flow calorimetry.

Critical aspects. Theoretically, this method does not require microbial growth but simply catabolic activity. Nevertheless, a minimum number of micro-organisms are required to give heat output measures above base-line and this is usually achieved by use of an enrichment method.

Potential uses. Test for efficacy of antimicrobial preservation.

2-1-1-6. *Turbidimetry*

Principles of measurement. Microbial growth will lead to detectable changes in medium opacity. This can be accurately quantified by optical density measurement at a specified wavelength. In its simplest form such measurements are performed in a standard spectrophotometer over a wavelength range generally of 420-615 nm. Alternative automated systems employ microtitre plate readers offering continuous readout with early detection of optical density change.

Critical aspects. Attempts have been made to extrapolate the initial bioburden from the time for detection but this may be limited to healthy micro-organisms with reproducible growth characteristics. The methods cannot distinguish between viable and non-viable micro-organisms.

Potential uses. By means of calibration graphs, determination of the inoculum size of microbial suspensions for use in pharmacopoeial tests. In automated mode, establishment of the preservative sensitivity of test micro-organisms recovered from formulated products.

2-1-1-7. *Phage-based methods*

Principles of measurement. Bacterial viruses (bacteriophage, phage) can infect host cells causing either lysis or incorporation of their genetic material and expression of novel proteins. Their high level of host specificity can be employed in detection methods which exploit the consequences of infection as an end-point. Such end-points include: plaque formation on a solid lawn of reporter bacteria; detection of intracellular contents released from lysed bacteria (possibly by colorimetric method); or phage-induced effects such as ice nucleation or bioluminescence following infection by genetically modified phage. Fluorescently labelled coliphages can be used for the selective detection of viable *E. coli* in combination with DEFT (see 2-3-3.).

Critical aspects. Phage-based detection can be used in both single and mixed cultures where host specificity allows both detection and identification. Detectable end-points often require a minimum number of target cells to ensure a measurable signal, necessitating enrichment in situations of low bioburden. The viral infection process can be adversely affected by sample composition. In most cases there is a narrow host range which makes it difficult to detect a broad spectrum of microbial contaminants.

Potential uses. These methods are used mainly for research purposes with commercial development aimed principally towards uses in clinical and food microbiology. These methods are likely to be employed for presence/absence determinations of specified micro-organisms.

2-1-2. **Media development to improve detection**

Principles of measurement. Culture media have existed for many years and have been constantly improved. A recent innovation is the appearance of chromogenic substrates which are increasingly used in clinical and food microbiology. The ability to detect the presence of specific enzymes using suitable substrates has led to the development of a large number of methods for the identification of micro-organisms employing manual or automated methods. The incorporation of such substrates into a selective or non-selective primary isolation medium can eliminate the need for further subculture and biochemical tests to identify certain micro-organisms. Consequently, chromogenic liquid or solid culture media are designed to produce specific enzymatic activities for detection and differentiation of micro-organisms. In these particular media, defined substrates are introduced into the formulation and are hydrolysed by the specific cell enzyme of a given bacteria or fungi during growth. These substrates are chosen according to the diagnostic enzymatic activity sought and are linked to coloured indicators.

Critical aspects. The use of innovative media presents several advantages: improved discrimination of colonies in mixed culture, ease of use and ease of interpretation. In addition, response times are shorter because growth and identification of the micro-organism are simultaneous. However, validation of the media must be undertaken carefully to ensure a combination of specificity, selectivity and robustness. The quality of the signal is based not only on the careful choice of the enzymes used as the basis of detection, as these enzymes may be present in different genera, but also on physico-chemical characteristics of the medium such as pH.

Potential uses. Detection of specified micro-organisms such as *E. coli*, coliforms, *Salmonella*, *Staphylococcus* and *Streptococcus* spp.; particular benefit may be found in presence/absence testing. Yeasts can also be detected using chromogenic culture media.

2-2. *DIRECT MEASUREMENT*

2-2-1. **Solid phase cytometry**

Principles of measurement. A membrane filter is used to retain microbial contaminants. Micro-organisms are stained by labelling using a fluorophore as a viability indicator, either before or after filtration. The fluorophore is initially a non-fluorogenic, conjugated substrate that requires intracellular enzymatic activity to cleave the substrate and release the fluorescent moiety. An intact cellular membrane is required to retain fluorophore within the cytoplasm. Laser excitation and automated scanning allows the detection of single, viable fluorescent micro-organisms. Appropriate software permits differentiation of viable micro-organisms from auto-fluorescent particles. The high sensitivity and rapidity of detection permits near-real-time detection of microbial contaminants. Total cell counts can be obtained using a permanently fluorescing stain.

Critical aspects. Metabolically active, fastidious and viable non-culturable micro-organisms can be detected. This may result in reappraisal of the microbial limits established for the samples under evaluation. Spores require initiation of germination to enable detection. Single cell detection may be achievable, but identification is not currently part of the routine test protocol. The use of fluorescent antibody may offer a route to selective detection. False positives may occur from auto-fluorescent particles, which can be difficult to differentiate from micro-organisms.

Potential uses. Rapid and sensitive method for the non-specific evaluation of bioburden. It has found applications in testing pharmaceutical-grade waters.

2-2-2. **Flow cytometry**

Principles of measurement. Fluorophore-labelled micro-organisms can be detected in suspension as they pass through a flow cell cytometer. Where a viability-indicating fluorophore substrate is employed, viable micro-organisms can be differentiated from non-viable particles (see 2-2-1.).

Critical aspects. Flow cytometry may be applied for the microbiological analysis of both filterable and non-filterable materials. Flow cytometric analysis gives near-real-time

detection, but it is not as sensitive as solid phase cytometry. To increase sensitivity for use in the pharmaceutical field, it often becomes necessary to add an incubation step in culture media and in that case the method becomes a growth-based method. Analysis of non-filterable samples may require serial dilution to optimise performance, and particulate size can have a significant effect on performance. With the exception of filterability, similar considerations apply to those of solid phase cytometry. Clumping of bacteria can be a problem (e.g. *S. aureus*).

Potential uses. In contrast with solid phase cytometry, this method offers the potential to detect and enumerate the microbial bioburden in materials containing significant levels of particulate matter. If a pre-incubation step is needed, the method becomes a qualitative determination.

2-2-3. **Direct epifluorescent filtration technique (DEFT)**

Principles of measurement. This technique may be considered to be a forerunner of solid phase cytometry. Micro-organisms concentrated by filtration from the sample are stained with a fluorescent dye, formerly acridine orange and now more commonly 4′,6-diamidino-2-phenylindole (DAPI), that may be detected by epifluorescent illumination. Fluorescent vital staining techniques as employed in solid phase cytometry (see 2-2-1.) are amenable to DEFT and fluorescent redox dyes such as 5-cyano-2,3-ditolyltetrazolium chloride (CTC) can be used to highlight respiring cells. Coupled with microscopy, the method allows rapid detection of micro-organisms, the absolute sensitivity depending on the volume of product filtered and the number of fields of view examined. Semi-automated auto-focusing systems coupled to image analysis have served to improve the utility of this method. A modification to the principle employs sampling using an adhesive sheet which permits collection of cells from surfaces, staining on the sheet and subsequent direct observation under the epifluorescence microscope.

Critical aspects. The distribution of micro-organisms on the membrane affects method robustness. The intensity of fluorescence can be influenced by the staining process and the metabolic status of the micro-organisms. A brief period of culture on the filter surface prior to staining allows microcolony formation; these microcolonies stain readily, can be easily enumerated and are demonstrable evidence of viability. Developments using fluorescence *in situ* hybridisation (FISH) arising from the complementary interaction of a fluorescently-labelled oligonucleotide probe with a specific rRNA sequence offer a route to selective detection.

Potential uses. DEFT is generally limited to low viscosity fluids although pre-dilution or pre-filtration has occasionally been applied to viscous or particulate products. Bioburden monitoring has been successfully achieved in aqueous pharmaceuticals.

2-3. *CELL COMPONENT ANALYSIS*

2-3-1. **Phenotypic**

2-3-1-1. *Immunological methods*

Principles of measurement. Antibody-antigen reactions can be employed to detect unique cellular determinants of specific organisms. These reactions can be linked to agglutination phenomena, colorimetric or fluorimetric end-points offering both quantitative and qualitative detection. Enzyme-linked immunosorbent assays (ELISA) offer simple solid phase methodologies.

Critical aspects. Immunological detection methods depend upon the unique expression of specific identifiers but do not necessarily demonstrate the presence of viable micro-organisms.

Potential uses. Detection and identification of specified micro-organisms.

2-3-1-2. *Fatty acid profiles*

Principles of measurement. The fatty acid composition of micro-organisms is stable, well conserved and shows a high degree of homogeneity within different taxonomic groups. The isolate is grown on a standard medium and harvested. The fatty acids are saponified, methylated and extracted and the occurrence and amount of the resulting fatty acid methyl esters are measured by high resolution gas chromatography. The fatty acid composition of an unknown isolate is compared with a database of known isolates for a possible match and identification.

Critical aspects. The use of fatty acid profiles for microbial identification requires a high degree of standardisation. It is critical for the fatty acid composition of microbial cells that isolates are grown using standard media and standard incubation conditions. Standard conditions for operation of the gas chromatograph must be employed, with frequent runs of calibration standards and known isolates being very important.

Potential uses. Identification or characterisation of environmental and product flora for contaminant tracing and detection of specified micro-organisms.

2-3-1-3. *Fourier transform infrared (FTIR) spectroscopy*

Principles of measurement. A Fourier transformation of the infrared spectrum of whole micro-organisms gives a stable, recognisable pattern typical of the taxonomic groups of micro-organisms. The analysis of the FTIR pattern can be performed in instruments available on the market. The isolate is grown on a standard medium and harvested. Cell mass is transferred to a carrier, and the infrared spectrum is recorded. The Fourier transformation is calculated and the pattern is compared with a database of known isolates for a possible match and identification.

Critical aspects. The use of FTIR-patterns for microbial identification requires a high degree of standardisation. It is critical for the FTIR-pattern of microbial cells that isolates are grown using standard media and standard incubation conditions. The cells must be in the same state of the growth cycle when analysed. Particular attention needs to be paid to the validation process.

Potential uses. Identification or characterisation of environmental and product flora for contaminant tracing and detection of specified micro-organisms.

2-3-1-4. *Mass spectrometry*

Principles of measurement. Gaseous breakdown products released by heating microbial isolates in a vacuum can be analysed by mass spectrometry, providing characteristic spectra. Similarly, intact microbial cells, when subject to intense ionisation under matrix-assisted laser desorption ionisation-time of flight (MALDI-TOF) mass spectrometry, release a distinctive pattern of charged species. Such spectra can be compared with known profiles as a rapid aid to identification.

Critical aspects. Isolates require culture prior to analysis.

Potential uses. Identification or characterisation of environmental and product flora for contaminant tracing and detection of specified micro-organisms.

2-3-1-5. *Biochemical assays based on physiological reactions*

Principles of measurement. These assays are usually preceded by a Gram stain or other early differentiation test to decide on the appropriate testing protocol. Microbial cell suspensions are tested using biochemical test kits. Micro-organisms are known to have particular reactions to these biochemical substances, e.g. utilisation of specific carbon sources. The identification of the culture is done by comparing the biochemical reaction profile with a database. These methods can be performed manually or by automated instruments.

Critical aspects. A pure colony is needed which must not be older than 3 days. The handling of the system is easy but the interpretation of the results can be subjective. Depending on the system used and the micro-organism under investigation, the results can be available quickly.

Potential uses. Identification of environmental and product flora for contaminant tracing and detection of specified micro-organisms.

2-3-2. **Genotypic**

2-3-2-1. *Nucleic acid amplification techniques (NAAT)*

General principles of measurement. NAAT rely on the reiteration of the process of DNA polymerisation, leading to an exponential increase of a specific fragment of the nucleic acid, i.e. the use of the polymerase chain reaction (PCR). In this thermophilic cyclic process a specific DNA fragment is amplified using oligonucleotide primers (see also general method *2.6.21*). RNA can also be amplified by PCR after transcription into cDNA using a reverse transcriptase. This technique is known as reverse transcriptase PCR (RT-PCR). Alternatively, specific RNA-based amplification techniques, for example nucleic acid sequence-based amplification (NASBA) or transcription-mediated amplification (TMA) are available to amplify multiple antisense copies of the RNA target. Amplified nucleic acid fragments can be analysed by several methods: fragment size analysis; specific sequence analysis; reamplification with a second primer pair; or specific detection by hybridisation with a fluorescent labelled probe. Depending on the choice of analysis the amplification technique can be qualitative, semi-quantitative or quantitative. For identification/characterisation purposes sequence analysis of specific parts of the genome can be used (i.e. 16S or 23S rRNA targets).

General critical aspects. NAAT have many advantages over classical methods for the detection of micro-organisms:

- the methods are highly specific, provided that the primers chosen are specific for a particular micro-organism or group of micro-organisms;
- the procedures are rapid, overcoming the problem of prolonged incubation times;
- the methods are highly sensitive allowing ideally the detection and amplification of one single nucleic acid fragment in the reaction mix.

However, there are numerous practical restrictions to its use:

- the sensitivity of the methods is highly dependent on how successfully the target fragments can be concentrated in the sample;
- the presence of inhibitors of the enzymatic process result in false negative reactions;
- the starting volume of the sample tested is small;
- the procedures are prone to cross-contamination from previously amplified fragments resulting in false positive results.

Depending on the aim, a choice must be made for amplification of an RNA or DNA target. The target choice affects the correlation with viability. The use of DNA as a marker has the disadvantage that dead micro-organisms also contain DNA, whereas mRNA is rapidly degraded in dead bacteria and is considered a better marker for viability.

Critical aspects of RT-PCR. Reverse transcriptase-PCR is characterised by the synthesis of cDNA using RNA as a template. Reverse transcriptase is used for this step. A specific part of the cDNA is subsequently amplified by PCR. Depending on the quality of the RNA isolation, the cDNA synthesis efficiency can vary. RT-PCR can be used to specifically detect RNA if the DNA contamination of the RNA sample is minimal.

Critical aspects of RNA amplification techniques. These methods have proven to be very valuable for specific (quantitative) RNA detection. However, they may be more difficult to implement routinely.

Critical aspects of (semi-) quantitative detection (real-time PCR). Classical PCR techniques are based on end-point detection. In general fragment analysis is carried out using agarose gels and specific size markers. However, there is no correlation between the amount of PCR product at the end of the reaction and the original amount of target molecule. In contrast the amount of PCR product detected at the beginning of the exponential phase of the reaction correlates very well with the initial starting amount of nucleic acid. Modern real-time PCR techniques are developed to measure this exponential phase of the reaction. These techniques generate amplification data from which the original amount of target molecule can be deduced. A specific labelled probe detects in real time the PCR product formed, allowing direct visualisation of the exponential part of the PCR reaction. By comparison with amplification plots of a standard dilution series, a quantification of the target molecule can be obtained. Automated real-time PCR systems are available on the market. An additional advantage is that the chance of cross-contamination is minimised, as PCR products are scanned with a laser while the tubes remain closed. However, generation of standards will be difficult to accomplish.

Critical aspects of amplification of genes coding for 16S or 23S rRNA. A powerful application of PCR is the amplification and subsequent sequence analysis of specific parts of the genes coding for 16S or 23S rRNA. Analysis of these specific DNA sequences allows in most cases the identification of a micro-organism at species level. Selection of appropriate universal primers, or even species-specific primer pairs, from international databases allows a high specificity in fragment amplification. Modern systematic classification is based on comparative sequence analysis.

Potential uses. Owing to the high specificity of the amplification techniques, they are very suitable for identification purposes. NAAT are suitable for the detection of specified micro-organisms or certain groups such as mycoplasmas. Real-time quantitative PCR is needed for enumeration.

2-3-2-2. *Genetic fingerprinting*

Principles of measurement. This technique characterises and identifies micro-organisms using restriction fragments of nucleic acids from bacterial and fungal genomes. DNA is extracted from a pure microbial cell lysate and cut into fragments by restriction enzymes. DNA fragments are size-separated by electrophoresis, visualised, and the pattern is compared with other known patterns of microbial isolates. The genetic fingerprint is a stable marker that provides definitive species discrimination or even characterisation below species level. Ribotyping is a typical example of this technique. There are also fingerprinting methods based on PCR with primers that bind to several sites in the microbial genome, creating amplicons with a characteristic size distribution.

Critical aspects. There is a need for a pure colony, but no preliminary cultivation step is necessary. The growth conditions (temperature, type of media,) do not affect the outcome of the analysis. For the identification of bacteria semi-automated systems are on the market.

Potential uses. Genetic fingerprinting is more valuable for strain discrimination (characterisation below species level) than for identification of species.

3. GENERAL VALIDATION REQUIREMENTS

The purpose of this section is to provide guidance on the validation of methods for use as alternatives to microbiological methods of the Pharmacopoeia. For microbial recovery and identification, microbiological testing laboratories sometimes use alternative test methods to those described in the

general chapters for a variety of reasons, such as economics, throughput, and convenience. Validation of these methods is required. Some guidance on validation is provided in the General Notices section 1.1 on the use of alternative methods.

Validation of alternative microbiological methods must take into account the large degree of variability associated with conventional methods. When conducting microbiological testing by conventional plate count, for example, one frequently encounters a range of results that is broader than ranges in commonly used chemical tests.

Where specific equipment is critical for the application of the alternative method, the equipment, including computer hardware and software, must be fully qualified as follows:

- design qualification (DQ) to provide documented evidence that the design of the equipment is suitable for correct performance of the method; to be provided by the supplier;
- installation qualification (IQ) to provide documented evidence that the equipment has been provided and installed in accordance with its specification;
- operational qualification (OQ) to provide documented evidence that the installed equipment operates within pre-determined limits when used in accordance with its operational procedures;
- performance qualification (PQ) to provide documented evidence that the equipment, as installed and operated in accordance with operational procedures, consistently performs in accordance with predetermined criteria and thereby yields correct results for the method. This is typically done with a 'model' system (with test micro-organisms) to make sure that the conditions used by the user laboratory make it possible to satisfy the criteria described by the supplier of the method in the laboratory.

Some alternative methods depend on the use of databases. The extent of coverage of the database with respect to the range of micro-organisms of interest must be taken into account for validation purposes.

The value of a new or modified method must be demonstrated in a comparative study between the official method and the alternative method. The characteristics defined in this chapter must be used to establish this comparison.

3-1. *TYPES OF MICROBIOLOGICAL TESTS*

It is critical to the validation effort to identify the portion of the test addressed by the alternative method. For example, there are a variety of methods available to detect the presence of viable cells. These methods may have applications in a variety of tests (e.g. bioburden, sterility tests,) but may not, in fact, replace the critical aspects of the test entirely. For example, a sterility test by membrane filtration may be performed according to the pharmacopoeial procedure up to the point of combining the processed filter with the recovery media, and after that the presence of viable cells might then be demonstrated by use of some of the available methods. Validation of this application would, therefore, require validation of the recovery system employed rather than the entire test.

General concerns. Validation of a microbiological method is the process by which it is experimentally established that the performance characteristics of the method meet the requirements for the intended application. Since microbiological tests have 3 basic applications, 3 separate sets of validation criteria are required. These concerns are described below.

3-2. *VALIDATION OF ALTERNATIVE QUALITATIVE TESTS FOR THE PRESENCE OR ABSENCE OF MICRO-ORGANISMS*

3-2-1. **Accuracy and precision**

A direct method to show the equivalence of 2 qualitative methods would be to run them side by side and determine the degree to which the method under evaluation shows equivalence to the pharmacopoeial method. An example of this could be the sterility test where this would translate into a comparison of the rate of positive and negative results produced by the alternative method versus the pharmacopoeial method for identical samples. However, in a case such as the sterility test, the low number of failures would required thousands of comparison tests to establish equivalency and thus would be problematic.

A more feasible method for evaluating the precision of an alternative qualitative method compared with a pharmacopoeial method might be to observe the degree of agreement between the two when the procedures are performed repeatedly on different lots of the same product. The accuracy and precision of the alternative method may be expressed as the relative rates of false positive and false negative results between the new method and the pharmacopoeial method using a standardised, low-level inoculum.

The rate of occurrence of false negative results in the presence of the sample for the 2 methods can be estimated using low levels of test micro-organisms. This design is similar to the standard bacteriostasis/fungistasis test; however, the level of micro-organisms inoculated must be very low, for example about 5 CFU per unit. The level of inoculum should ensure a frequency of failure rates high enough to provide a means to compare the 2 methods. The alternative method must provide at least as high a frequency of recovery as the pharmacopoeial method.

3-2-2. **Specificity**

The specificity of an alternative qualitative method is its ability to detect the required range of micro-organisms that may be present in the sample under test. This concern is adequately addressed by growth promotion of the media for qualitative methods that rely upon growth to demonstrate presence or absence of micro-organisms. For those methods that do not require growth as an indicator of microbial presence, the specificity assures that extraneous matter in the test system does not interfere with the test. Where relevant for the purpose of the test, mixtures of micro-organisms are used during validation.

3-2-3. **Limit of detection**

The limit of detection of an alternative qualitative method is the lowest number of micro-organisms in a sample that can be detected under the stated experimental conditions. A microbiological limit test determines the presence or absence of micro-organisms. Due to the nature of microbiology, the limit of detection refers to the number of micro-organisms present in the original sample before any dilution or incubation steps; it does not refer to the number of micro-organisms present at the time of testing.

The 2 methods (alternative and pharmacopoeial) must be assessed by using an inoculum containing a low number of test micro-organisms, for example about 5 CFU per unit, followed by a measurement of recovery. The level of inoculation must be adjusted until at least 50 per cent of the samples show growth in the pharmacopoeial method. It is necessary to repeat this determination several times, as the limit of detection of a test is determined from an appropriate number of replicates (for example not less than 5). The ability of the 2 methods to detect the presence of single organisms can be demonstrated using the χ^2 test.

3-2-4. **Robustness**

The robustness of an alternative qualitative method is a measure of its capacity to remain unaffected by small but deliberate variations in method parameters, and provides an indication of the method's reliability under a variety of normal test conditions, such as different analysts, instruments, batches of reagents and laboratories. Robustness can be defined as the intrinsic resistance to the influences exerted by operational and environmental variables on the results of the microbiological method. Robustness is a validation parameter best suited to determination by the supplier of the method, but if critical

parameters are modified by the user their effects on robustness have to be evaluated. Robustness of a qualitative method is judged by its ability to detect the test micro-organisms under the deliberate variations to the method parameters.

3-3. *VALIDATION OF ALTERNATIVE QUANTITATIVE TESTS FOR ENUMERATION OF MICRO-ORGANISMS*

3-3-1. **Accuracy**

The accuracy of an alternative quantitative method is the closeness of the test results obtained by the alternative method to the value obtained by the pharmacopoeial method. Accuracy must be demonstrated across the practical range of the test. Accuracy is usually expressed as the percentage of recovery of micro-organisms by the method.

Accuracy may be shown by preparing a suspension of micro-organisms at the upper end of the range of the test, serially diluted down to the lower end of the range of the test. For example, if the alternative method is meant to replace the traditional plate count method for viable counts, then a reasonable range might be 10^0-10^6 CFU per mL. If it is, instead, a replacement for the MPN method, a much more narrow range may be used. At least 5 suspensions across the range of the test must be analysed for each test micro-organism. If the alternative method is meant to replace the conventional method, it must provide an estimate of viable micro-organisms of not less than 70 per cent of the estimate provided by the pharmacopoeial method.

The protocol used to check the linearity (see 3-3-5.) of the method may also be used to check the accuracy: the suspensions of micro-organisms prepared for the alternative method are counted at the same time using the pharmacopoeial method. Accuracy is demonstrated if the suitability tests show that the slope of the regression line does not differ significantly from 1 and if the y-intercept is not significantly different from 0.

3-3-2. **Precision**

The precision of an alternative quantitative method is the degree of agreement among individual test results when the procedure is applied repeatedly to multiple samplings of homogeneous suspensions of micro-organisms under the prescribed conditions. The precision is usually expressed as the variance, standard deviation or coefficient of variation of a series of measurements.

At the very least, a suspension of micro-organisms with a concentration usually in the middle of the range is counted several times. The number of replicates is chosen so that the entire test can be carried out during the same working session, i.e. under the same operating conditions and without any change in the suspension of micro-organisms. Other working sessions are then carried out under conditions of maximum variability (different reagents, different operators, different days, etc.). The variance of the results observed in each of the working sessions ('groups') is calculated. If the variances are homogeneous, the variance of the repeatability can be calculated. The inter-group variance of the results is calculated. The variance of the intermediate precision is the sum of the variance of the repeatability and the inter-group variance. The coefficients of variation are then calculated. Generally, a coefficient of variation in the 10-15 per cent range is acceptable. Irrespective of the specific results, the alternative method must have a coefficient of variation that is not larger than that of the pharmacopoeial method.

3-3-3. **Specificity**

The specificity of an alternative quantitative method is demonstrated using a range of appropriate micro-organisms. Where relevant for the purpose of the test, mixtures of micro-organisms are used during validation.

3-3-4. **Limit of quantification**

The limit of quantification of an alternative quantitative method is the lowest number of micro-organisms that can be accurately counted. As it is not possible to obtain a reliable sample containing a known number of micro-organisms, it is essential that the quantification limit is determined from a number of replicates, for example at least 5. The results of the linearity and accuracy studies can also be used. Here, the lowest concentration in the linear range is considered to be the limit of quantification of the method. The limit of quantification must not be a number greater than that of the pharmacopoeial method.

3-3-5. **Linearity**

The linearity of an alternative quantitative method is its ability to produce results that are proportional to the concentration of micro-organisms present in the sample within a given range. The linearity must be determined over the range corresponding to the purpose of the alternative method. A method to determine this would be to select different concentrations of each test micro-organism and conduct several replicates of each concentration. The number of replicates is chosen so that the entire test can be carried out during the same working session. 2 more working sessions are then completed under conditions of maximum variability (different reagents, different operators, different days, etc.). After checking the homogeneity of the variances of the results obtained for each concentration, the regression line is calculated. Linearity is demonstrated if the estimated slope is significant and if the test for deviation from linearity is non-significant.

3-3-6. **Range**

The range of an alternative quantitative method is the interval between the upper and lower levels of micro-organisms that have been determined with precision, accuracy, and linearity using the method as written. The range is determined from studies of precision, accuracy and linearity.

3-3-7. **Robustness**

The robustness of an alternative quantitative method is a measure of its capacity to remain unaffected by small but deliberate variations in method parameters and provides an indication of its reliability under a variety of normal test conditions, such as different analysts, instruments, batches of reagents and laboratories. Robustness can be defined as the intrinsic resistance to the influences exerted by operational and environmental variables on the results of the microbiological method. Robustness is a validation parameter best suited to determination by the supplier of the method, but if critical parameters are modified by the user their effects on robustness have to be evaluated. Robustness of a quantitative method is judged by its ability to enumerate with statistical relevance the test micro-organisms under the deliberate variations to the method parameters.

3-4. *VALIDATION OF ALTERNATIVE IDENTIFICATION TESTS*

There is a large body of evidence that different methods vary considerably in their ability to identify micro-organisms in pharmacopoeial products. It must be accepted that a method of systematics needs to be internally consistent, but may differ from others in identification of isolates. In other words, identification of an isolate based on biochemical activity may lead to one conclusion, identification by fatty acid analysis to another, identification by DNA analysis may lead to a third, and other methods may lead to alternative conclusions. Microbiological identifications by a particular system flow directly from previous experience with that system, and therefore may well differ from identifications by another system. It is critical that each system provides a consistent identification of isolates from pharmacopoeial products.

3-4-1. **Accuracy**

The accuracy of an alternative identification method is its ability to identify the desired micro-organism to the required taxonomic level and to differentiate it from other micro-organisms present in the sample. It must be demonstrated with a series of test micro-organisms or

micro-organisms obtained from a typical sample previously identified by another method.

3-4-2. **Precision**

The precision of an alternative identification method is the degree of agreement among individual test results when the procedure is applied repeatedly to multiple samplings of suspensions of test micro-organisms across the range of the test.

3-4-3. **Robustness**

The robustness of an alternative identification method is a measure of its capacity to remain unaffected by small but deliberate variations in method parameters, and provides an indication of its reliability under a variety of normal test conditions such as different analysts, instruments, batches of reagents and laboratories. Robustness can be defined as the intrinsic resistance to the influences exerted by operational and environmental variables on the results of the microbiological method. Robustness is a validation parameter best suited to determination by the supplier of the method, but if critical parameters are modified by the user their effects on robustness have to be evaluated. Robustness of an identification method is judged by its ability to identify consistently the test micro-organisms under the deliberate variations to the method parameters.

4. SPECIFIC VALIDATION REQUIREMENTS

4-1. *BACKGROUND*

Validation is defined in various contexts with some differences, but a consensus definition is to establish documented evidence that a process will consistently achieve what it is intended to do. Hence, in order to perform correct validation of a new method it is critical to understand and define what the procedure is intended to achieve.

2 levels of validation must be envisaged for the application of conventional or alternative microbiological methods. Primary validation of a method is typically performed by the supplier of the new method, whereas validation for the actual intended use, which is a verification of the suitability or applicability of the method in a given situation, must be seen as the responsibility of the user. Before validation for the actual intended use, performance qualification is carried out by the user as described in 3. *General validation requirements*.

Typically, microbiological methods use specific characteristics of micro-organisms as indicators or detection principles for more general questions. The information needed is presence, number, viability, resistance or identity of micro-organisms in a given product or environment.

A given method will usually give an indirect and conditional answer to the questions. For example, the total number and viability of micro-organisms is indicated by the number of micro-organisms able to reproduce under a certain set of conditions for sample preparation, cultivation and incubation. Reproduction in classical microbiology is hence taken as the general indicator for viability. There are other parameters, however, that can be used as an indication of viability. The level of ATP or accumulation or metabolism of substrates in living cells can also be taken as an indicator for viability. The results of different indication methods for viability may not always be identical. Micro-organisms may not be able to reproduce on a given medium, but may still accumulate and metabolise a substrate. Micro-organisms may be unable at a given state of damage to accumulate a substrate, but may still be able to recover and to reproduce.

Another example is the various methods used for identification of micro-organisms. Characterisation of the metabolic pattern of micro-organisms is frequently used for species identification, whereas another method consists of the comparison of DNA sequences. Again, the answer obtained may not be fully coincident for the different identification methods, and while one answer may be appropriate for the construction of a correct phylogenetic correlation tree, another answer may be more useful in the context of pathogenicity or other properties of the differentiated micro-organisms.

4-1-1. **Primary validation**

In order to characterise a specific microbiological method, the principle of detection must be clearly described by the supplier. The method must be fully detailed with respect to the conditions required for application, the materials and equipment needed, and the expected signal. The application principle should be described in a peer-reviewed journal.

The principle of detection must be characterised in a model system and/or with a panel of test micro-organisms, by at least:

- prerequisite treatment of sample or micro-organisms;
- type of response;
- specificity of the response;
- limit of detection;
- range;
- linearity of the response;
- accuracy and precision of the response;
- robustness of the method in a model system;
- limits of suitability.

Once the method has been characterised in this way by the supplier, the principle of detection need not be verified by each user.

4-1-2. **Validation of alternative microbiological method**

4-1-2-1. *Risk-benefit analysis*

For validation of specific alternative microbiological methods it is critical that the purpose of the procedure is precisely outlined. Based on the purpose, the type and depth of information needed must be defined. The information obtained by, and the limitations of, the conventional method and the alternative method must be considered and compared in a risk-benefit analysis.

An alternative method can be justified as being applicable if the information obtained gives a scientifically sound answer to the questions asked in the procedure, and if the limitations of the method are not more severe than the limitations of the conventional method.

4-1-2-2. *Validation for the actual intended use*

The alternative method must be applied in the procedure used and with the samples to be analysed under the responsibility of the user, and must be shown to give comparable results as characterised in a model system by the supplier. Specific questions to be asked where applicable are:

- compatibility of the response with the sample preparation needed for product testing;
- limit and range of detection of the method with regard to sample size and sample availability;
- specificity of the response with regard to the influence of the ingredients of the product;
- linearity of the response with regard to all types of samples to be analysed;
- accuracy and precision of the response with regard to all types of samples to be analysed;
- robustness of the method with regard to all types of samples to be analysed.

Acceptance criteria for the method in routine use will need to be defined as a function of the application and of the validation data.

4-2. *BIOLUMINESCENCE FOR ENUMERATION OF MICRO-ORGANISMS*

4-2-1. **Risk-benefit analysis**

Extensive scientific evidence and use for years supports the capability of the ATP viability marker to detect the same range of micro-organisms as is encountered using standard plating methods. Since this method is growth-dependent,

the improvement comparing to the plating methods is the rapidity to obtain a result (from 5 days with the plating methods to 24 h for bioluminescence). It is possible to identify the bioluminescence-detected micro-organisms from the incubation step medium, but it has to be remembered that in a mixed culture some micro-organisms may out-compete others during incubation. This method provides evaluation of samples within 24 h for filterable and non-filterable products (water, in-process control, environmental samples, solid and liquid raw materials, solid and liquid finished products, etc.) and for a large number of samples, when the detection step is automated.

4-2-2. **Validation for the actual intended use**

The method relies upon the detection of ATP from viable micro-organisms. Performance qualification is carried out with test micro-organisms to make sure that under the conditions applied by the user laboratory it is possible to satisfy the criteria described by the supplier for precision, accuracy and linearity (quantitative method), or limit of detection (qualitative and semi-quantitative method) over the range required for the intended use. Following this step, validation proceeds in 3 phases:

- *phase 1*: fertility of the medium in the presence of the product (if an incubation step is performed);
- *phase 2*: search for interferences that may increase or inhibit the ATP production (by addition of an ATP standard solution to the product to test);
- *phase 3*: comparative testing with the pharmacopoeial method.

A detailed example of validation of the bioluminescence method is given at the end of this chapter.

4-3. *CYTOMETRY (SOLID AND FLOW) FOR ENUMERATION OF MICRO-ORGANISMS*

4-3-1. **Risk-benefit analysis**

Extensive scientific evidence supports the capability of this fluorescence viability marker to detect and/or count a wider range of micro-organisms than are encountered using standard plating methods. Cytometry will detect all viable micro-organisms including some that may not be discernable by growth-based methods. Whilst being rapid, the recovery of micro-organisms post-analysis is limited. Thus the further processing of analysed samples for identification would require alternative fluorescent stains or an alternative method. Currently it is not possible to use this method for routine identification of micro-organisms, although basic morphology is readily discernable in solid phase cytometry under fluorescent microscopes. This method provides rapid evaluation of samples and hence allows for a proactive approach to pharmaceutical manufacturing, facilitating building quality into pharmaceutical operations. This method is not growth-dependent and hence all metabolically active micro-organisms will be detected. However, the limit of detection for flow cytometry is currently such that it cannot be used for enumeration by direct examination for most pharmaceutical samples. If pre-incubation is necessary, the estimation becomes semi-quantitative (limit test).

4-3-2. **Validation for the actual intended use**

The method relies upon the detection of a fluorescent signal from labelled micro-organisms.

Performance qualification is carried out to ensure that the instruments perform within their defined operational parameters. This involves the use of fluorescent standards of prescribed intensity and cultures of known type and number of micro-organisms. These tests challenge the quantitative detection system. Reagents and consumables (negative controls) must also be utilised to ensure that the routine test protocol is applicable, and that the quality of the materials used in the test do not contribute to the final result. Pure culture experiments involving test micro-organisms are used to challenge the detection system, and to compare test results with those obtained using standard plate count. Multiple replicates (at least 5) from overnight cultures diluted across a concentration range (e.g. 100 per cent, 75 per cent, 50 per cent, 25 per cent and 10 per cent) must be used to evaluate linearity, accuracy, precision, range, specificity, limit of quantification (quantitative method) and limit of detection (flow cytometry with pre-incubation step). Since cytometry has high sensitivity (solid phase cytometry can detect single cells, whereas flow cytometry is sensitive to a level of around 10-50 cells per millilitre), and detection is not growth based, the linearity of the instrumentation can be tested by comparison of the actual results with the expected value.

Following this step, validation proceeds in 2 phases: validation with respect to the product to be examined and comparative testing. Results of each phase must be evaluated against pre-determined acceptance criteria using positive and negative controls:

- *phase 1*: individual materials to be evaluated by cytometry must be 'spiked' with a defined level of micro-organisms to ensure that the sample preparation process and the samples themselves do not have an impact upon the performance of the detection system; specifically, the sample matrix must not affect detection (i.e. contain endogenous chromophores, auto-fluorescent particles), and in the case of flow cytometry, sample size/dilution and flow rate must be determined for optimal performance;
- *phase 2*: testing must be performed in which the results obtained by cytometry and the pharmacopoeial method are compared; the number of samples and the testing period must be defined in a comparability protocol; the number of samples required will vary, but must be representative of the material evaluation process (i.e. time/number), and must allow for statistical evaluation; all samples must be prepared according to defined procedures and evaluated against selected validation and acceptance criteria, similar to those used for pure culture evaluation.

4-4. *FATTY ACID PROFILES FOR IDENTIFICATION*

4-4-1. **Risk-benefit analysis**

Identification by fatty acid profiles may be more precise than the identification methods based on metabolic profiles in conventional microbiological culture methods. The database is broader than for conventional culture methods. Pre-incubation is needed, but extraction and identification is faster than in biochemical methods and hence, the result is obtained faster. Other modern methods, such as 16S rRNA sequence analysis or genetic fingerprinting, have a similar broad differentiation range and give a result as fast as this method.

Separation of closely related micro-organisms (e.g. *E. coli* and *Salmonella* spp.) can be difficult by fatty acid profiles. Where the identification of closely related micro-organisms is especially important, other systems may give more precise results. For a given application it is important to specify which types of micro-organisms are most important to be identified. If it is most critical to characterise the correct phylogenetic species of the isolate, DNA sequence-based identification methods will give more reliable results.

Limitations of identification by fatty acid profiles are also seen in the necessity to grow micro-organisms on standardised media under standard temperature conditions and durations of incubation. Micro-organisms that cannot be cultivated on such media cannot be identified.

4-4-2. **Validation for the actual intended use**

Using a range of test micro-organisms and at least 3 replicate determinations in each case, it must be demonstrated that the method yields consistent results.

A significant number of isolates from typical samples to be analysed by the user must be identified, at least 3 times each. The results in each case should be consistent and in accord with those obtained using alternative identification methods.

Where a different identification result is found in another identification system, the reason for the difference must be investigated. Where a scientifically plausible explanation exists for the recognition of a different species, a difference between identification systems may be acceptable. In such a case it must be assured that the recognition of the identified species is robust. It must also be assured that the system does not group poorly recognised isolates under one 'species' thereby simulating the repeated isolation of a single species.

4-5. *NUCLEIC ACID AMPLIFICATION TECHNIQUES*

4-5-1. **Risk-benefit analysis**

NAAT are widely used in diagnostics for their precision and rapidity at a relatively low cost (for the analysis, but not for the instruments,) when compared with the traditional methods. Provided that specific validations have been performed, when NAAT are appropriately used, they may offer advantages in some fields in comparison to classical methods; on the other hand classical methods are generally more easily standardisable, need a lower level of technical competence and may have lower costs. Even when NAAT are not more difficult to perform than traditional methods, the interpretation of the results generally needs a high degree of scientific competence.

When used for identification, DNA-based methods cannot discriminate between dead and live micro-organisms. That means that they cannot be directly used on the product but only after passage on a traditional culture medium, thereby losing part of the advantage in rapidity. Moreover, if used directly on the product at the end of the analysis, these methods do not result in a strain to be used in further experiments and may not give advantages when the micro-organisms to be detected are poorly cultivable or stressed. RNA amplification techniques (e.g. RT-PCR) may identify living micro-organisms (but not spores) directly in the products, but in comparison to traditional methods are much more difficult to use routinely. On the other hand, where specific primers are used, identification (or typing) by NAAT is more precise than the traditional methods and in some cases may have other advantages: for instance for the identification of some vaccines (e.g. cholera vaccine, whole cell pertussis vaccine,) their use may substitute for that of specific sera and contribute to reducing the use of animals, or may give a very specific identification where this is presently lacking (e.g. BCG vaccine).

These methods are in general non-quantitative (PCR) or semi-quantitative (real-time PCR), meaning that their results cannot be compared with those of a colony count where an exact enumeration of the micro-organisms present in the sample is requested, but even if colony count has a valence consolidated in time this dogma may not be verified for bacteria which have a tendency to clump (mycobacteria) or are organised in chains or in clusters (streptococci, staphylococci), therefore an accurate standardisation of the semi-quantitative methods may give results of comparable reliability.

4-5-2. **Validation for the actual intended use**

The method is validated according to chapter *2.6.21*. Comparison of conventional and PCR-based methodologies, which differ in sensitivity and specificity, is particularly difficult and may lead to divergent conclusions.

The following example is published for information and not for general application.

Example validation of an alternative method: detailed protocol followed by a laboratory for the implementation of bioluminescence

BACKGROUND

Methods using a pre-incubation step in liquid medium (bioluminescence in tube or microtitre plate) do not offer quantitative information but a presence/absence determination in the quantity analysed. Using more than a single sample quantity, the system may offer semi-quantitative determination (limit test). For example, the classical tested quantity for viable aerobic count on non-sterile products is 0.1 g or 0.1 mL leading to absence in 0.1 g or 0.1 mL, i.e. less than 10 micro-organisms in 1 g or 1 mL for a negative result and more than or equal to 10 micro-organisms in 1 g or 1 mL in case of a positive result. If 0.01 g or 0.01 mL is tested simultaneously, a negative result corresponds to a number of micro-organisms less than 100 in 1 g or 1 mL. The combination between negative for 0.01 g or 0.01 mL and positive for 0.1 g or 0.1 mL permits an estimate of the contamination level of the product to be less than 100 but more than or equal to 10 micro-organisms in 1 g or 1 mL.

As mentioned in section 2., bioluminescence can be used as a quantitative method if micro-organisms are captured on a filtration membrane and later incubated in culture medium (bioluminescence on membrane).

The protocol below describes validation aspects for qualitative, semi-quantitative and quantitative methods.

PERFORMANCE QUALIFICATION OF THE ALTERNATIVE METHOD

Specificity

Screen the method with test micro-organisms appropriate to the method. For example, for microbial aerobic viable count on non-sterile products, use at least the micro-organisms described in chapter *2.6.12* for the fertility of the media in the presence of product. This determination is performed at least 3 times with each micro-organism. Acceptance criterion: all test micro-organisms are successfully detected.

Limit of detection (only for semi-quantitative or qualitative methods)

Prepare a low inoculum (about 5 CFU in the initial sample) of each test micro-organism. Perform the analysis in at least 5 replicates with the pharmacopoeial method and with the bioluminescence method concerned. Acceptance criterion: the ability of the 2 methods to detect the presence of a single micro-organism can be demonstrated using the χ^2 test. Alternative procedure: prepare a series of dilutions of micro-organisms to have a count in the next dilution of about 5 CFU per inoculum (e.g.: 10 CFU/inoculum, 5 CFU/inoculum, 2.5 CFU/inoculum, 1.25 CFU/inoculum, 0.75 CFU/inoculum). Perform the test on 5 independent series of dilutions with the pharmacopoeial method and with the bioluminescence method concerned. Determine the limit of detection for each method. It corresponds to the last dilution where the result is positive for the 5 series. Acceptance criterion: the limit of detection of the bioluminescence method is equal to or lower than that of the pharmacopoeial method.

Limit of quantification (quantitative method)

This can be performed at the same time as the linearity determination. It corresponds to the lowest concentration of the chosen range that satisfies the criteria for linearity, accuracy and precision. Acceptance criterion: the limit of quantification of the bioluminescence method is equal to or lower than that of the pharmacopoeial method.

Precision

Quantitative evaluation. For each test micro-organism, perform at least 5 replicates during the same series including at least the concentration of micro-organisms corresponding to the middle of the range. Perform 3 independent tests. Carry out a statistical analysis to compare the precision of the 2 methods or calculate the coefficient of variation (CV). Acceptance criterion: CV 15 per cent to 30 per cent or precision not different with the risk alpha equal to 5 per cent between the 2 methods. If precision is different, the bioluminescence method is better than the pharmacopoeial method, indicated by a smaller standard deviation.

Qualitative or semi-quantitative evaluation. Use the alternative procedure described for setting the limit of detection and report the frequency of positive results in parallel with the pharmacopoeial method. Acceptance criterion: the frequency of positive results at the detection limit is 100 per cent and this frequency is better than or equal to the pharmacopoeial method.

Linearity

For each test micro-organism, prepare 5 concentrations in the range of the bioluminescence method (range is normally indicated by the supplier). Perform the pharmacopoeial and the bioluminescence methods in parallel. Repeat this test 2 further times to have results on 3 independent tests. Test for linear regression, presence of a slope, and lack of fit with the F test at alpha equal to 5 per cent. If statistical analysis is not possible, calculate the correlation coefficient (r^2) and the slope between the 2 methods. Acceptance criterion: statistical analysis may show linear regression, the presence of a slope and no lack of fit with a risk of 5 per cent. Equation $y = a + bx$ is determined where b is the slope and a the intercept. If no statistical analysis is available, r^2 is at least 0.9 and the slope does not diverge by more than 20 per cent from 1 (b between 0.8 and 1.2). If the linearity is not demonstrated in such a large range, the range can be decreased and linearity demonstrated with only 3 concentrations in place of 5.

Accuracy

Quantitative evaluation. Accuracy can be determined with data obtained in linearity. For each micro-organism use 3 to 5 concentrations within the linear range of the method. Perform statistical analysis (Student's t test at risk 5 per cent) to test the conformity of the estimated slope (value = 1) versus the obtained slope and to test the conformity of the estimated intercept (value = 0) versus the obtained intercept. For example, if the estimated slope is b with a standard deviation $s_{(b)}$ of 0.090 with 5 concentrations of micro-organisms, calculate $t = (b - 1)/s_{(b)}$. For intercept a, with standard deviation equal to $s_{(a)}$, $t = (a - 0)/s_{(a)}$. Compare these values to the Student's t at 5 per cent, for 13 degrees of freedom (3 tests, 5 concentrations). Acceptance criterion: if the t values obtained are less than the Student's t, the method is exact in the applied range. In the case that there is no conformity for the slope (slope different from 1) or for the intercept (intercept different from 0) the method is not exact over the applied range.

Qualitative or semi-quantitative evaluations. Use the alternative procedure described for setting the limit of detection. Calculate the proportion of false negatives for bioluminescence and for the pharmacopoeial method over all tested dilutions. Compare the extent of false negatives for the 2 or 3 concentrations of micro-organisms just under the detection limit (for example 5 CFU/inoculum, 2.5 CFU/inoculum or 1.25 CFU/inoculum) giving a positive result. By definition, the detection limit corresponds to 0 per cent of false negatives. Acceptance criterion: the percentage of false negatives for the bioluminescence method at sample concentrations below the detection limit must be equal to or lower than that of the pharmacopoeial method.

Range

This is the interval between the lowest and the highest concentrations of micro-organisms where linearity, precision and accuracy have been demonstrated.

Robustness

The information is given by the supplier.

VALIDATION FOR THE ACTUAL INTENDED USE

In the example given, there was no need to determine the accuracy and detection limit in the presence of the product. The validation consists of 3 parts, verifying:

- *phase 1*: the fertility of the medium in the presence of the product;
- *phase 2*: the absence of interference from the product that may increase or inhibit ATP production;
- *phase 3*: the testing of the product in parallel with the pharmacopoeial method.

These 3 parts of validation are performed on 3 independent tests using for example at least 2 different batches of product.

Phase 1: fertility of the medium in the presence of the product

If the product has a known high contamination level (more than 500 micro-organisms per gram or millilitre) the incubation step is unnecessary, the micro-organisms can be detected directly. In this case testing the fertility of the medium in the presence of the product is not necessary. However, pharmaceutical products are generally contaminated at a much lower level and growth of the micro-organism is necessary to obtain detection with bioluminescence. It must therefore be proven that the product does not inhibit the growth of micro-organisms under the conditions of the test. In order to do so, separately add inoculum at not more than 100 CFU for each test micro-organism into the portion of medium containing the product. For bioluminescence in tube or microtitre plate, perform the bioluminescence test. For bioluminescence on membrane, incubate at 30-35 °C or 20-25 °C for 5 days and count the bioluminescent colonies on the membrane. Acceptance criterion: the test is positive (bioluminescence in tube or microtitre plate); the quantitative recovery of the micro-organism is at least 70 per cent (bioluminescence on membrane).

Phase 2: search for interference of the product

The objective is to show that the product does not add stray light or non-microbial ATP (does not lead to false positive result: criterion A) or does not decrease the ATP detection (does not lead to a false negative result: criterion B).

Bioluminescence in tube or microtitre plate

A. Perform the bioluminescence test with the culture broth alone and with the culture broth in the presence of the product. Determine the RLU value for culture broth alone and the RLU value for culture broth in the presence of product.

B. Perform the bioluminescence test with the culture broth alone and the culture broth in the presence of ATP. Determine the response coefficient for ATP concentration in per cent.

Acceptance criterion:

- *criterion A*: the RLU value of culture broth in the presence of product is less than twice the RLU value of culture broth alone (if criterion A is not satisfied, it is necessary to determine a specific threshold for this product);
- *criterion B*: the RLU value of culture broth in the presence of product and ATP is within the interval 25 per cent to 200 per cent of the RLU value of culture broth in the presence of ATP.

Bioluminescence on membrane: perform the complete bioluminescence test to search for interference. Acceptance criterion: the recovery of micro-organisms is greater than or equal to 70 per cent and not more than 200 per cent.

Phase 3: analysis of the product in parallel with the pharmacopoeial method

Perform the test according to the validated method for the product concerned in parallel with the pharmacopoeial method to show the relationship between the 2 methods for the product concerned, on 3 independent tests and using at least 2 different batches. Express the result as positive or negative in a certain quantity (bioluminescence in tube or microtitre plate) or express the count per filtered quantity (bioluminescence on membrane). Acceptance criterion: results must be correlated with the pharmacopoeial method.

01/2008:50107

5.1.7. VIRAL SAFETY

This chapter provides general requirements concerning the viral safety of medicinal products whose manufacture has involved the use of materials of human or animal origin. Since viral safety is a complex issue, it is important that a risk assessment is carried out. Requirements to be applied to a specific medicinal product are decided by the competent authority.

Where the risk of viral contamination exists, complementary measures are used as appropriate to assure the viral safety of medicinal products, based on:

- selection of source materials and testing for viral contaminants;
- testing the capacity of the production process to remove and/or inactivate viruses;
- testing for viral contamination at appropriate stages of production.

Where appropriate, one or more validated procedures for removal or inactivation of viruses are applied.

Further detailed recommendations on viral safety, including validation studies, are provided, in particular, by the *Note for guidance on virus validation studies: the design, contribution and interpretation of studies validating the inactivation and removal of viruses (CPMP/BWP/268/95)* of the Committee for Proprietary Medicinal Products, and the *ICH guideline Q5A: Viral safety evaluation of biotechnology products derived from cell lines of human or animal origin* (including any subsequent revisions of these documents).

Requirements concerning immunological products for veterinary use are dealt with in the monographs *Vaccines for veterinary use (0062)* and *Immunosera for veterinary use (0030)* and related general chapters.

Risk assessment

A risk assessment with respect to viral safety is carried out where materials of human or animal origin are used as ingredients of medicinal products or in the manufacture of active substances, excipients or medicinal products.

The principle of the risk assessment is to consider various factors that may influence the potential level of infectious particles in the medicinal product and factors related to the use of the medicinal product that determine or influence the viral risk to the recipients.

The risk assessment takes into consideration relevant factors, for example:

- the species of origin;
- the organ, tissue, fluid of origin;
- the potential contaminants in view of the origin of the raw material and the history of the donor(s), preferably including epidemiological data;
- the potential contaminants from the manufacturing process (for example, from risk materials used during manufacture);
- the infectivity and pathogenicity of the potential contaminants for the intended recipients of the medicinal product, taking account of the route of administration of the medicinal product;
- the amount of material used to produce a dose of medicinal product;
- controls carried out on the donor(s), on the raw material, during production and on the final product;
- the manufacturing process of the product and its capacity to remove and/or inactivate viruses.

The risk assessment can be based mainly on the manufacturing conditions if these include rigorous inactivation steps (for example, for gelatin etc., and products terminally sterilised by steam or dry heat as described in the general texts on sterility (*5.1*)).

01/2014:50108

5.1.8. MICROBIOLOGICAL QUALITY OF HERBAL MEDICINAL PRODUCTS FOR ORAL USE AND EXTRACTS USED IN THEIR PREPARATION

This general chapter presents recommended acceptance criteria for the microbiological quality of both herbal medicinal products for oral use and the extracts that are used in their preparation.

Microbial examination of non-sterile products is performed according to the methods given in general chapters *2.6.12*, *2.6.13* and *2.6.31*. Acceptance criteria based upon the total aerobic microbial count (TAMC) and the total combined yeasts/moulds count (TYMC) are given below.

Acceptance criteria are based on individual results or on the average of replicate counts when replicate counts are performed (e.g. direct plating methods).

A list of specified micro-organisms for which acceptance criteria are set can be found below. The list is not necessarily exhaustive and for a given preparation it may be necessary to test for other micro-organisms depending on the nature of the starting materials, the manufacturing process and the intended use.

HERBAL MEDICINAL PRODUCTS

A. Herbal medicinal products containing herbal drugs, with or without excipients, intended for the preparation of infusions and decoctions using boiling water (for example herbal teas, with or without added flavourings)

TAMC (*2.6.12*)	Acceptance criterion: 10^7 CFU/g Maximum acceptable count: 50 000 000 CFU/g
TYMC (*2.6.12*)	Acceptance criterion: 10^5 CFU/g Maximum acceptable count: 500 000 CFU/g
Escherichia coli (*2.6.31*)	Acceptance criterion: 10^3 CFU/g
Salmonella (*2.6.31*)	Absence (25 g)

B. Herbal medicinal products containing, for example, extracts and/or herbal drugs, with or without excipients, where the method of processing (for example, extraction) or, where appropriate, in the case of herbal drugs, of pre-treatment reduces the levels of organisms to below those stated for this category

TAMC (*2.6.12*)	Acceptance criterion: 10^4 CFU/g or CFU/mL Maximum acceptable count: 50 000 CFU/g or CFU/mL
TYMC (*2.6.12*)	Acceptance criterion: 10^2 CFU/g or CFU/mL Maximum acceptable count: 500 CFU/g or CFU/mL
Bile-tolerant gram-negative bacteria (*2.6.31*)	Acceptance criterion: 10^2 CFU/g or CFU/mL
Escherichia coli (*2.6.31*)	Absence (1 g or 1 mL)
Salmonella (*2.6.31*)	Absence (25 g or 25 mL)

C. Herbal medicinal products containing, for example, extracts and/or herbal drugs, with or without excipients, where it can be demonstrated that the method of processing (for example, extraction with low-strength ethanol or water that is not boiling, or low-temperature concentration)

or, in the case of herbal drugs, of pre-treatment, would not reduce the level of organisms sufficiently to reach the criteria required under B

TAMC (*2.6.12*)	Acceptance criterion: 10^5 CFU/g or CFU/mL Maximum acceptable count: 500 000 CFU/g or CFU/mL
TYMC (*2.6.12*)	Acceptance criterion: 10^4 CFU/g or CFU/mL Maximum acceptable count: 50 000 CFU/g or CFU/mL
Bile-tolerant gram-negative bacteria (*2.6.31*)	Acceptance criterion: 10^4 CFU/g or CFU/mL
Escherichia coli (*2.6.31*)	Absence (1 g or 1 mL)
Salmonella (*2.6.31*)	Absence (25 g or 25 mL)

EXTRACTS

Extracts should fulfill the acceptance criteria for category B herbal medicinal products. However, where it can be demonstrated that the method of processing would not reduce the level of micro-organisms sufficiently to reach the category B criteria, the extracts shall meet the requirements for category C herbal medicinal products.

The recommended acceptance criteria apply to extracts that are to be incorporated into herbal medicinal products for oral use. More-stringent acceptance criteria may be required for extracts that are to be incorporated into pharmaceutical preparations to be administered by other routes in order to satisfy the acceptance criteria for the intended route of administration (*5.1.4*).

It is recognised that for some herbal medicinal products and extracts used in their preparation the criteria given above for TAMC, TYMC and bile-tolerant gram-negative bacteria cannot be met because of the typical level of microbial contamination. Less-stringent acceptance criteria may be applied on the basis of a risk assessment that takes account of qualitative and quantitative characterisation of the microbial contamination and the intended use of the herbal medicinal product or extract.

If it has been shown that none of the prescribed tests for a herbal medicinal product or extract will allow valid enumeration of micro-organisms at the level prescribed, a validated method with a limit of detection as close as possible to the indicated acceptance criterion is used.

01/2009:50109

5.1.9. GUIDELINES FOR USING THE TEST FOR STERILITY

The purpose of the test for sterility (*2.6.1*), as that of all pharmacopoeial tests, is to provide an independent control analyst with the means of verifying that a particular material meets the requirements of the European Pharmacopoeia. A manufacturer is neither obliged to carry out such tests nor precluded from using modifications of, or alternatives to, the stated method, provided he is satisfied that, if tested by the official method, the material in question would comply with the requirements of the European Pharmacopoeia.

PRECAUTIONS AGAINST MICROBIAL CONTAMINATION

Aseptic conditions for performance of the test can be achieved using, for example, a class A laminar-air-flow cabinet located within a class B clean room, or an isolator

GUIDANCE TO MANUFACTURERS

The level of assurance provided by a satisfactory result of a test for sterility (the absence of contaminated units in the sample) as applied to the quality of the batch is a function of the homogeneity of the batch, the conditions of manufacture and the efficiency of the adopted sampling plan. Hence for the purpose of this text a batch is defined as a homogeneous collection of sealed containers prepared in such a manner that the risk of contamination is the same for each of the units contained therein.

In the case of terminally sterilised products, physical proofs, biologically based and automatically documented, showing correct treatment throughout the batch during sterilisation are of greater assurance than the sterility test. The circumstances in which parametric release may be considered appropriate are described under *5.1.1. Methods of preparation of sterile products*. The method of media-fill runs may be used to evaluate the process of aseptic production. Apart from that, the sterility test is the only analytical method available for products prepared under aseptic conditions and furthermore it is, in all cases, the only analytical method available to the authorities who have to examine a specimen of a product for sterility.

The probability of detecting micro-organisms by the test for sterility increases with their number present in the sample tested and varies according to the readiness of growth of micro-organism present. The probability of detecting very low levels of contamination even when it is homogenous throughout the batch is very low. The interpretation of the results of the test for sterility rests on the assumption that the contents of every container in the batch, had they been tested, would have given the same result. Since it is manifest that every container cannot be tested, an appropriate sampling plan should be adopted. In the case of aseptic production, it is recommended to include samples filled at the beginning and at the end of the batch and after significant intervention.

OBSERVATION AND INTERPRETATION OF RESULTS

Conventional microbiological/biochemical techniques are generally satisfactory for identification of micro-organisms recovered from a sterility test. However, if a manufacturer wishes to use condition (d) as the sole criterion for invalidating a sterility test, it may be necessary to employ sensitive typing techniques to demonstrate that a micro-organism isolated from the product test is identical to a micro-organism isolated from the test materials and/or the testing environment. While routine microbiological/biochemical identification techniques can demonstrate that 2 isolates are not identical, these methods may not be sufficiently sensitive or reliable enough to provide unequivocal evidence that 2 isolates are from the same source. More sensitive tests, for example molecular typing with RNA/DNA homology, may be necessary to determine that micro-organisms are clonally related and have a common origin.

01/2010:50110

5.1.10. GUIDELINES FOR USING THE TEST FOR BACTERIAL ENDOTOXINS

1. INTRODUCTION

Endotoxins from gram-negative bacteria are the most common cause of toxic reactions resulting from contamination of pharmaceutical products with pyrogens; their pyrogenic activity is much higher than that of most other pyrogenic substances. These endotoxins are lipo-polysaccharides. Although there are a small number of pyrogens which possess a different structure, the conclusion is generally justified that the absence of bacterial endotoxins in a product implies the absence of pyrogenic components, provided the presence of non-endotoxin pyrogenic substances can be ruled out.

The presence of endotoxins in a product may be masked by factors interfering with the reaction between the endotoxins and the amoebocyte lysate. Hence, the analyst who wishes to replace the rabbit pyrogen test required in a pharmacopoeial monograph by a test for bacterial endotoxins

has to demonstrate that a valid test can be carried out on the product concerned; this may entail a procedure for removing interfering factors.

As indicated in the test for bacterial endotoxins (*2.6.14*), information must be available on the 2 following aspects before a test on a sample can be regarded as valid.

- The suitability of the material to be used for the test has to be established. The absence of endotoxins in the water for BET and in the other reagents must be assured and the sensitivity of the amoebocyte lysate must be checked to confirm the sensitivity declared by the manufacturer.
- As the product to be examined may interfere with the test, the sensitivity of the amoebocyte lysate is determined in the presence and in the absence of the product under examination. There must be no significant difference between the 2 sensitivity values.

The text *2.6.14. Bacterial endotoxins* indicates methods for removing interfering factors; in the case of interference, another test must be carried out after such a method has been applied to check whether the interference has indeed been neutralised or removed.

This general chapter explains the reasons for the requirements in the test for bacterial endotoxins, then deals with the reading and interpretation of the results.

Substitution of the rabbit pyrogen test required in a pharmacopoeial monograph by an amoebocyte lysate test constitutes the use of an alternative method of analysis and hence requires validation; some guidance on how to proceed is given in section 11.

The reference method for bacterial endotoxins is stated in the monograph on a given product; where no method is stated, method A is the reference method. If a method other than the reference method is to be used, the analyst must demonstrate that the method is appropriate for this product and gives a result consistent with that obtained with the reference method (see also Section 13).

2. METHOD

The addition of endotoxins to amoebocyte lysate may result in turbidity, precipitation or gelation (gel-clot); only the gel-clot method was used in the Pharmacopoeia as an evaluation criterion in the first type of test for bacterial endotoxins. The advantage was the simplicity of basing the decision to pass or fail the product under examination on the absence or presence of a gel-clot, visible with the naked eye. The quantitative methods described as methods C, D, E and F were developed later: they require more instrumentation, but they are easier to automate for the regular testing of large numbers of samples of the same product.

Endotoxins may be adsorbed onto the surface of tubes or pipettes made from certain plastics or types of glass. Interference may appear due to the release of substances from plastic materials. Hence, the materials used should be checked; subsequent batches of tubes or pipettes may have a slightly different composition, and therefore the analyst is advised to repeat such tests on starting with new batches of materials.

The decision to use the test for bacterial endotoxins as a limit test implies first that a threshold endotoxin concentration must be defined for the product to be tested, and second that the objective of the test is to know whether the endotoxin concentration in the product under examination is below or above this threshold. The quantitative methods C, D, E and F make it possible to determine the endotoxin concentration in the sample under examination, but for compliance with the Pharmacopoeia and in routine quality control the final question is whether or not this concentration exceeds a defined limit.

In setting a threshold concentration of endotoxin for the product to be tested, due attention should be paid to the dose of the product: the threshold should be set so as to ensure that as long as the endotoxin concentration in the product remains below this threshold even the maximal dose administered by the intended route per hour does not contain sufficient endotoxin to cause a toxic reaction.

When the endotoxin concentration in the product exactly equals the threshold value, gelation will occur, as is the case when the endotoxin concentration is much higher, and the product will fail the test, because the all-or-none character of the test makes it impossible to differentiate between a concentration exactly equal to the threshold concentration and one that is higher. It is only when no gelation occurs that the analyst may conclude that the endotoxin concentration is below the threshold concentration.

For products in the solid state, this threshold concentration of endotoxin per mass unit or per International Unit (IU) of product has to be translated into a concentration of endotoxin per millilitre of solution to be tested, as the test can only be carried out on a solution. The case of products that already exist in the liquid state (such as infusion fluids) is discussed below.

Endotoxin limit: the endotoxin limit for active substances administered parenterally, defined on the basis of dose, is equal to:

$$\frac{K}{M}$$

K = threshold pyrogenic dose of endotoxin per kilogram of body mass;

M = maximum recommended bolus dose of product per kilogram of body mass.

When the product is to be injected at frequent intervals or infused continuously, M is the maximum total dose administered in a single hour period.

The endotoxin limit depends on the product and its route of administration and is stated in the monograph. Values for K are suggested in Table 5.1.10.-1.

For other routes, the acceptance criterion for bacterial endotoxins is generally determined on the basis of results obtained during the development of the preparation.

Table 5.1.10.-1

Route of administration	*K* (IU of endotoxin per kilogram of body mass)
Intravenous	5.0
Intravenous, for radiopharmaceuticals	2.5
Intrathecal	0.2

Which dilution of the product is to be used in the test to obtain maximal assurance that a negative result means that the endotoxin concentration of the product is less than the endotoxin limit and that a positive result means that the lysate detected an endotoxin concentration equal to or greater than the endotoxin limit? This dilution depends on the endotoxin limit and on the sensitivity of the lysate: it is called the Maximum Valid Dilution (MVD) and its value may be calculated using the following expression:

$$\frac{\text{endotoxin limit} \times \text{concentration of test solution}}{\lambda}$$

Concentration of test solution:

- mg/mL if the endotoxin limit is specified by mass (IU/mg);
- Units/mL if the endotoxin limit is specified by unit of biological activity (IU/Unit);
- mL/mL if the endotoxin limit is specified by volume (IU/mL).

λ = the labelled lysate sensitivity in the gel-clot technique (IU/mL) or the lowest concentration used in the standard curve of the turbidimetric or chromogenic techniques.

When the value of the maximum valid dilution is not a whole number, a convenient whole number smaller than the MVD may be used for routine purposes (which means preparing a solution of the product which is less diluted than the MVD indicates). In this case, a negative result indicates that the endotoxin concentration of the product lies below the limit value. However, when the endotoxin concentration of the product in such a test is less than the endotoxin limit but high enough to make the reaction with the lysate result in a clot, the test may be positive under these conditions. Hence, when a test with this 'convenient' dilution factor is positive, the product should be diluted to the MVD and the test should be repeated. In any case of doubt or dispute the MVD must be used.

This stresses the importance of the confirmation of the sensitivity of the lysate.

Example

A 50 mg/mL solution of phenytoin sodium (intended for intravenous injection) has to be tested. Determine the MVD, given the following variables:

M = maximum human dose = 15 mg per kilogram of body mass;

c = 50 mg/mL;

K = 5 IU of endotoxin per kilogram of body mass;

λ = 0.4 IU of endotoxin per millilitre.

$$\mathrm{MVD} = \frac{5 \times 50}{15} \times \frac{1}{0.4} = 41.67$$

For routine tests on this product, it may be expedient to dilute 1 mL of the solution to be tested to 20 mL (MVD/2 rounded to the next lower whole number). However, if this test result is positive the analyst will have to dilute 1 mL to 41.67 mL and repeat the test. A dilution to 41.67 mL is also necessary when the test is performed to settle a dispute.

3. REFERENCE MATERIAL

Endotoxin standard BRP is intended for use as the reference preparation. It has been assayed against the WHO International Standard for Endotoxin and its potency is expressed in International Units of endotoxin per ampoule. The International Unit of endotoxin is defined as the specific activity of a defined mass of the International Standard.

For routine purposes, another preparation of endotoxin may be used, provided it has been assayed against the International Standard for Endotoxin or the BRP and its potency is expressed in International Units of endotoxin.

NOTE: 1 International Unit (IU) of endotoxin is equal to 1 Endotoxin Unit (E.U.).

4. WATER FOR BET

Testing the absence of endotoxin in this reagent by a technique derived from the rabbit pyrogen test was rejected for practical and theoretical reasons:

- the rabbit test is not sensitive enough to detect endotoxin in water for BET intended for tests on products with a very low endotoxin limit;
- the relatively low precision of the rising temperature response in rabbits would call for many replications in rabbits;
- the terms 'pyrogens' and 'endotoxins' denote groups of entities that do not coincide completely.

The text *2.6.14. Bacterial endotoxins* indicates that methods other than triple distillation may be used to prepare water for BET. Reverse osmosis has been used with good results; some analysts may prefer to distil the water more than 3 times. Whatever method is used, the resultant product must be free of detectable endotoxins.

5. pH OF THE MIXTURE

In the test for bacterial endotoxins, optimum gel-clot occurs for a mixture at pH 6.0-8.0. However, the addition of the lysate to the sample may result in a lowering of the pH.

6. VALIDATION OF THE LYSATE

It is important to follow the manufacturer's instructions for the preparation of the solutions of the lysate.

The positive end-point dilution factors in gel-clot methods A and B are converted to logarithms. The reason is that if the frequency distribution of these logarithmic values is plotted, it usually approaches a normal distribution curve much more closely than the frequency distribution of the dilution factors themselves; in fact it is so similar that it is acceptable to use the normal frequency distribution as a mathematical model and to calculate confidence limits with Student's *t*-test.

7. PRELIMINARY TEST FOR INTERFERING FACTORS

Some products cannot be tested directly for the presence of endotoxins because they are not miscible with the reagents, they cannot be adjusted to pH 6.0-8.0 or they inhibit or activate gel formation. Therefore a preliminary test is required to check for the presence of interfering factors; when these are found the analyst must demonstrate that the procedure to remove them has been effective.

The object of the preliminary test is to test the null hypothesis that the sensitivity of the lysate in the presence of the product under examination does not differ significantly from the sensitivity of the lysate in the absence of the product. A simple criterion is used in methods A and B: the null hypothesis is accepted when the sensitivity of the lysate in the presence of the product is at least 0.5 times and not more than twice the sensitivity of the lysate by itself.

A classical approach would have been to calculate the means of the log dilution factor for the lysate sensitivity with and without the product and to test the difference between the 2 means with Student's *t*-test.

The test for interfering factors in gel-clot methods A and B requires the use of a sample of the product in which no endotoxins are detectable. This presents a theoretical problem when an entirely new product has to be tested. Hence, a different approach was designed for quantitative methods C, D, E and F.

8. REMOVAL OF INTERFERING FACTORS

The procedures to remove interfering factors must not increase or decrease (for example, by adsorption) the amount of endotoxin in the product under examination. The correct way of checking this is to apply the procedures to a spiked sample of the product, that is, a sample to which a known amount of endotoxin has been added, and then to measure the recovery of the endotoxin.

Methods C and D. If the nature of the product to be analysed shows interference which cannot be removed by classical methods, it may be possible to determine the standard curve in the same type of product freed from endotoxins by appropriate treatment or by dilution of the product. The endotoxins test is then carried out by comparison with this standard curve.

Ultrafiltration with cellulose triacetate asymmetric membrane filters has been found to be suitable in most cases. The filters should be properly validated, because under some circumstances cellulose derivatives (β-D-glucans) can cause false positive results.

Polysulfone filters have been found to be unsuitable because false positive results had been obtained by some users.

9. THE PURPOSE OF THE CONTROLS

The purpose of the control made up with water for BET and the reference preparation of endotoxin at twice the concentration of the labelled lysate sensitivity is to verify the activity of the lysate at the time and under the conditions of the test. The purpose of the negative control is to verify the absence of a detectable concentration of endotoxin in water for BET.

The positive control, which contains the product to be examined at the concentration used in the test, is intended to show the absence of inhibiting factors at the time and under the conditions of the test.

10. READING AND INTERPRETATION OF THE RESULTS

Minute amounts of endotoxin in the water for BET, or in any other reagent or material to which the lysate is exposed during the test, may escape detection as long as they do not reach the sensitivity limit of the lysate. However, they may raise the amount of endotoxin in the solution containing the product under examination to just above the sensitivity limit and cause a positive reaction.

The risk of this happening may be reduced by testing the water for BET and the other reagents and materials with the most sensitive lysate available, or at least one that is more sensitive than the one used in the test on the product. Even then, the risk of such a 'false positive result' cannot be ruled out completely. It should be realised, however, that in this respect the test design is 'fail-safe' in contrast to a test design permitting a false negative result, which could lead to the release of an unsatisfactory product, thus endangering the patient's health.

11. REPLACEMENT OF THE RABBIT PYROGEN TEST BY A TEST FOR BACTERIAL ENDOTOXINS

Monographs on pharmaceutical products intended for parenteral administration that may contain toxic amounts of bacterial endotoxins require either a test for bacterial endotoxins or a rabbit pyrogen test. As a general policy:

- in any individual monograph, when a test is required, only one test is included, either that for pyrogens or that for bacterial endotoxins;
- in the absence of evidence to the contrary, the test for bacterial endotoxins is preferred over the test for pyrogens, since it is usually considered to provide equal or better protection to the patient;
- before including a test for bacterial endotoxins in a monograph, evidence is required that one of the tests described in chapter *2.6.14* can be applied satisfactorily to the product in question;
- the necessary information is sought from manufacturers; companies are invited to provide any validation data that they have concerning the applicability of the test for bacterial endotoxins to the substances and formulations of interest; such data includes details of sample preparation and of any procedures necessary to eliminate interfering factors; in addition, any available parallel data for rabbit pyrogen testing that would contribute to an assurance that the replacement of a rabbit pyrogen test by the test for bacterial endotoxin is appropriate, must be provided.

Additional requirements are defined in the following sections.

12. USE OF A DIFFERENT BACTERIAL ENDOTOXIN TEST FROM THAT PRESCRIBED IN THE MONOGRAPH

When a test for bacterial endotoxins is prescribed in a monograph and none of the 6 methods (A to F) described in chapter *2.6.14* is specified, then method A, the gel-clot method limit test, has been validated for this product. If one of the other methods (B to F) is specified, this is the one which has been validated for this product.

13. VALIDATION OF ALTERNATIVE METHODS

Replacement of a rabbit pyrogen test by a bacterial endotoxin test, or replacement of a stated or implied method for bacterial endotoxins by another method, is to be regarded as the use of an alternative method in the replacement of a pharmacopoeial test, as described in the General Notices:

> "The test and assays described are the official methods upon which the standards of the Pharmacopoeia are based. With the agreement of the competent authority, alternative methods of analysis may be used for control purposes, provided that the methods used enable an unequivocal decision to be made as to whether compliance with the standards of the monographs would be achieved if the official methods were used. In the event of doubt or dispute, the methods of analysis of the Pharmacopoeia are alone authoritative."

The following procedures are suggested for validating a method for bacterial endotoxins other than the one implied or indicated in the monograph.

13-1. The procedure and the materials and reagents used in the method should be validated as described for the test concerned.

13-2. The presence of interfering factors (and, if needed, the procedure for removing them) should be tested on samples of at least 3 production batches. It should be borne in mind that methods D and E, using a chromogenic peptide, require reagents that are absent in methods A, B, C and F, and hence compliance of methods A, B, C or F with the requirements for interfering factors cannot be extrapolated to method D or method E without further testing.

14. VALIDATION OF THE TEST FOR NEW PRODUCTS

The procedures described under 13-1 and 13-2 should be applied to all new products intended for parenteral administration that have to be tested for the presence of bacterial endotoxins according to the requirements of the Pharmacopoeia.

5.2. GENERAL TEXTS ON BIOLOGICAL PRODUCTS

01/2008:50201 corrected 6.0

5.2.1. TERMINOLOGY USED IN MONOGRAPHS ON BIOLOGICAL PRODUCTS

For some items, alternative terms commonly used in connection with veterinary vaccines are shown in parenthesis.

Seed-lot system. A seed-lot system is a system according to which successive batches of a product are derived from the same master seed lot. For routine production, a working seed lot may be prepared from the master seed lot. The origin and the passage history of the master seed lot and the working seed lot are recorded.

Master seed lot. A culture of a micro-organism distributed from a single bulk into containers and processed together in a single operation in such a manner as to ensure uniformity and stability and to prevent contamination. A master seed lot in liquid form is usually stored at or below – 70 °C. A freeze-dried master seed lot is stored at a temperature known to ensure stability.

Working seed lot. A culture of a micro-organism derived from the master seed lot and intended for use in production. Working seed lots are distributed into containers and stored as described above for master seed lots.

Cell-bank system (Cell-seed system). A system whereby successive final lots (batches) of a product are manufactured by culture in cells derived from the same master cell bank (master cell seed). A number of containers from the master cell bank (master cell seed) are used to prepare a working cell bank (working cell seed). The cell-bank system (cell-seed system) is validated for the highest passage level achieved during routine production.

Master cell bank (Master cell seed). A culture of cells distributed into containers in a single operation, processed together and stored in such a manner as to ensure uniformity and stability and to prevent contamination. A master cell bank (master cell seed) is usually stored at – 70 °C or lower.

Working cell bank (Working cell seed). A culture of cells derived from the master cell bank (master cell seed) and intended for use in the preparation of production cell cultures. The working cell bank (working cell seed) is distributed into containers, processed and stored as described for the master cell bank (master cell seed).

Primary cell cultures. Cultures of cells obtained by trypsination of a suitable tissue or organ. The cells are essentially identical to those of the tissue of origin and are no more than 5 *in vitro* passages from the initial preparation from the animal tissue.

Cell lines. Cultures of cells that have a high capacity for multiplication *in vitro*. In diploid cell lines, the cells have essentially the same characteristics as those of the tissue of origin. In continuous cell lines, the cells are able to multiply indefinitely in culture and may be obtained from healthy or tumoral tissue. Some continuous cell lines have oncogenic potential under certain conditions.

Production cell culture. A culture of cells intended for use in production; it may be derived from one or more containers of the working cell bank (working cell seed) or it may be a primary cell culture.

Control cells. A quantity of cells set aside, at the time of virus inoculation, as uninfected cell cultures. The uninfected cells are incubated under similar conditions to those used for the production cell cultures.

Single harvest. Material derived on one or more occasions from a single production cell culture inoculated with the same working seed lot or a suspension derived from the working seed lot, incubated, and harvested in a single production run.

Monovalent pooled harvest. Pooled material containing a single strain or type of micro-organism or antigen and derived from a number of eggs, cell culture containers etc. that are processed at the same time.

Final bulk vaccine. Material that has undergone all the steps of production except for the final filling. It consists of one or more monovalent pooled harvests, from cultures of one or more species or types of micro-organism, after clarification, dilution or addition of any adjuvant or other auxiliary substance. It is treated to ensure its homogeneity and is used for filling the containers of one or more final lots (batches).

Final lot (Batch). A collection of closed, final containers or other final dosage units that are expected to be homogeneous and equivalent with respect to risk of contamination during filling or preparation of the final product. The dosage units are filled, or otherwise prepared, from the same final bulk vaccine, freeze-dried together (if applicable) and closed in one continuous working session. They bear a distinctive number or code identifying the final lot (batch). Where a final bulk vaccine is filled and/or freeze-dried on several separate sessions, there results a related set of final lots (batches) that are usually identified by the use of a common part in the distinctive number or code; these related final lots (batches) are sometimes referred to as sub-batches, sub-lots or filling lots.

Combined vaccine. A multicomponent preparation formulated so that different antigens are administered simultaneously. The different antigenic components are intended to protect against different strains or types of the same organism and/or different organisms. A combined vaccine may be supplied by the manufacturer either as a single liquid or freeze-dried preparation or as several constituents with directions for admixture before use.

07/2010:50202

5.2.2. CHICKEN FLOCKS FREE FROM SPECIFIED PATHOGENS FOR THE PRODUCTION AND QUALITY CONTROL OF VACCINES

Where specified, chickens, embryos or cell cultures used for the production or quality control of vaccines are derived from eggs produced by chicken flocks free from specified pathogens (SPF). The SPF status of a flock is ensured by means of the system described below. The list of micro-organisms given is based on current knowledge and will be updated as necessary.

A flock is defined as a group of birds sharing a common environment and having their own caretakers who have no contact with non-SPF flocks. Once a flock is defined, no non-SPF birds are added to it.

Each flock is housed so as to minimise the risk of contamination. The facility in which the flock is housed must not be sited near to any non-SPF flocks of birds with the exception of flocks that are in the process of being established as SPF flocks and that are housed in facilities and conditions appropriate to SPF flocks. The SPF flock is housed within an isolator or in a building with filtered air under positive pressure. Appropriate measures are taken to prevent entry of rodents, wild birds, insects and unauthorised personnel.

Personnel authorised to enter the facility must have no contact with other birds or with agents potentially capable of infecting the flock. It is advisable for personnel to shower and change clothing or to wear protective clothing before entering the controlled facility.

Wherever possible, items taken into the facility are sterilised. In particular it is recommended that the feed is suitably treated to avoid introduction of undesirable micro-organisms and that water is at least of potable quality, for example from a chlorinated supply. No medication is administered to birds within the flock that might interfere with detection of any disease.

A permanent record is kept of the general health of the flock and any abnormality is investigated. Factors to be monitored include morbidity, mortality, general physical condition, feed consumption, daily egg production and egg quality, fertility and hatchability. Records are maintained for a period of at least 5 years. Details of any deviation from normal in these performance parameters or detection of any infection are notified to the users of the eggs as soon as practicable.

The tests or combination of tests described below must have suitable specificity and sensitivity with respect to relevant serotypes of the viruses. Samples for testing are taken at random.

A positive result for chicken anaemia virus (CAV) does not necessarily exclude use of material derived from the flock, but live vaccines for use in birds less than 7 days old shall be produced using material from CAV-negative flocks. Inactivated vaccines for use in birds less than 7 days old may be produced using material from flocks that have not been shown to be free from CAV, provided it has been demonstrated that the inactivation process inactivates CAV.

ESTABLISHMENT OF AN SPF FLOCK

A designated SPF flock is derived from chickens shown to be free from vertically-transmissible agents listed in Table 5.2.2-1. This is achieved by testing of 2 generations prior to the designated SPF flock. A general scheme for the procedure to be followed in establishing and maintaining an SPF flock is shown diagrammatically in Table 5.2.2.-2. In order to establish a new SPF flock, a series of tests must be conducted on 3 generations of birds. All birds in the 1st generation must be tested at least once before the age of 20 weeks for freedom from avian leucosis group-antigen and tested by an enzyme immunoassay (EIA) or by virus neutralisation (VN) for freedom of antibodies to avian leucosis virus subtypes A, B and J. All birds must also be tested for freedom from antibodies to the vertically-transmissible agents listed in Table 5.2.2-1. From the age of 8 weeks the flock is tested for freedom from *Salmonella*. Clinical examination is carried out on the flock from 8 weeks of age and the birds must not exhibit any signs of infectious disease. The test methods to be used for these tests are given in the table and further guidance is also given in the section below on routine testing of designated SPF flocks. From 20 weeks of age, the flock is tested as described under Routine testing of designated SPF flocks. All stages of this testing regime are also applied to the subsequent 2 generations, except the testing of every bird before lay for vertically-transmissible agents. All test results must indicate freedom from pathogens in all 3 generations for the flock consisting of the 3rd generation to be designated as SPF.

SPF embryos derived from another designated SPF flock contained within a separate facility on the same site may be introduced. From 8 weeks of age, these replacement birds are regarded as a flock and are tested in accordance with test procedures described above.

INITIAL TESTING REQUIREMENTS FOR SUBSEQUENT GENERATIONS DERIVED FROM A DESIGNATED SPF FLOCK

Where a replacement flock is derived exclusively from a fully established SPF flock the new generation is tested prior to being designated as SPF. In addition to the tests for *Salmonella* and monitoring of the general health and performance of the flock, further specific testing from the age of 8 weeks is required. Tests are performed on two 5 per cent samples of the flock (minimum 10, maximum 200 birds) taken with an interval of at least 4 weeks between the ages of 12-16 weeks and 16-20 weeks.

All samples are collected and tested individually. Blood samples for antibody tests and suitable samples for testing for leucosis antigen are collected. The test methods to be used are as described under Routine testing of designated SPF flocks. Only when all tests have confirmed the absence of infection may the new generation be designated as SPF.

ROUTINE TESTING OF DESIGNATED SPF FLOCKS

General examination and necropsy. Clinical examination is carried out at least once per week throughout the life of the flock in order to verify that the birds are free from fowl-pox virus and signs of any other infection. In the event of mortality exceeding 0.2 per cent per week, necropsy is performed on all available carcasses to verify that there is no sign of infection. Where appropriate, histopathological and/or microbiological/virological studies are performed to confirm diagnosis. Specific examination for tuberculosis lesions is carried out and histological samples from any suspected lesions are specifically stained to verify freedom from *Mycobacterium avium*. Caecal contents of all available carcasses are examined microbiologically for the presence of *Salmonella* spp. using the techniques described below. Where appropriate, caecal samples from up to 5 birds may be pooled.

Cultural testing for Salmonella spp. Cultural testing for *Salmonella* spp. is performed either by testing samples of droppings or cloacal swabs or by testing of drag swabs. Where droppings or cloacal swabs are tested, a total of 60 samples within each 4-week period is tested throughout the entire life of the flock. Tests may be performed on pools of up to 10 samples. Where drag swabs are tested, a minimum of 2 drag swabs are tested during each 4-week period throughout the entire life of the flock. Detection of *Salmonella* spp. in these samples is performed by pre-enrichment of the samples followed by culture using *Salmonella*-selective media.

Tests for avian leucosis antigen. Prior to the commencement of laying, cloacal swabs or blood samples (using buffy coat cultivation) are tested for the presence of group-specific leucosis antigen. A total of 5 per cent (minimum 10, maximum 200) of the flock is sampled during each 4-week period. During lay, albumen samples from 5 per cent (minimum 10, maximum 200) of the eggs are tested in each 4-week period. Tests are performed by EIA for group-specific antigen using methods that are capable of detecting antigen from subgroups A, B and J.

Test for antibodies to other agents. Tests for antibodies to all agents listed in Table 5.2.2.-1 are performed throughout the laying period of the flock. In each 4-week period, samples are taken from 5 per cent (minimum 10, maximum 200) of the flock. It is recommended that 1.25 per cent of the flock is sampled each week since some test methods for some agents must be conducted on a weekly basis. Table 5.2.2.-1 classifies the agents into those that spread rapidly through the flock and those that spread slowly or may not infect the entire flock. For those agents listed as slowly spreading, each sample is tested individually. For those agents listed as rapidly spreading, at least 20 per cent of the samples collected in each 4-week period are tested individually or, where serum neutralisation or ELISA tests are employed, all of the samples may be tested individually or by preparing pools of 5 samples, collected at the same time.

Suitable methods to be used for detection of the agents are shown in Table 5.2.2.-1. Subject to agreement by the competent authority, other test methods may be used provided they are shown to be at least as sensitive as those indicated and of appropriate specificity.

Table 5.2.2.-1

Agent	Test to be used**	Vertical transmission	Rapid/slow spread
Avian adenoviruses, group 1	AGP, EIA	yes	slow
Avian encephalomyelitis virus	AGP, EIA	yes	rapid
Avian infectious bronchitis virus	HI, EIA	no	rapid
Avian infectious laryngotracheitis virus	VN, EIA	no	slow
Avian leucosis viruses	EIA for virus, VN, EIA for antibody	yes	slow
Avian nephritis virus	IS	no	slow
Avian orthoreoviruses	IS, EIA	yes	slow
Avian reticuloendotheliosis virus	AGP, IS, EIA	yes	slow
Chicken anaemia virus	IS, EIA, VN	yes	slow
Egg drop syndrome virus	HI, EIA	yes	slow
Infectious bursal disease virus	Serotype 1: AGP, EIA, VN Serotype 2: VN	no	rapid
Influenza A virus	AGP, EIA, HI	no	rapid
Marek's disease virus	AGP	no	rapid
Newcastle disease virus	HI, EIA	no	rapid
Turkey rhinotracheitis virus	EIA	no	slow
Mycoplasma gallisepticum	Agg and HI to confirm a positive test, EIA, HI	yes	slow
Mycoplasma synoviae	Agg and HI to confirm a positive test, EIA, HI	yes	rapid
Salmonella pullorum	Agg	yes	slow

Agg: agglutination
AGP: agar gel precipitation; the technique is suitable where testing is carried out weekly
EIA: enzyme immunoassay
HI: haemagglutination inhibition
IS: immunostaining
VN: virus neutralisation

**Subject to agreement by the competent authority, other types of test may be used provided they are at least as sensitive as those indicated and of appropriate specificity.

Table 5.2.2-2. – *Schematic description of the establishment and maintenance of SPF flocks*

NEW STOCK	Establish freedom from vertically-transmissible agents
	Test all birds for avian leucosis antigen and antibodies prior to 20 weeks of age
	Test for *Salmonella* spp. and perform general clinical observation from 8 weeks of age
	Carry out routine testing for specified agents from 20 weeks of age
2nd GENERATION	Test all birds for avian leucosis antigen and antibodies prior to 20 weeks of age
	Test for *Salmonella* spp. and perform general clinical observation from 8 weeks of age
	Carry out routine testing for specified agents from 20 weeks of age
3rd GENERATION	Test all birds for avian leucosis antigen and antibodies prior to 20 weeks of age
	Test for *Salmonella* spp. and perform general clinical observation from 8 weeks of age
DESIGNATE FLOCK AS SPF IF ALL TESTS ARE SATISFACTORY	
3rd GENERATION	Carry out routine testing for specified agents from 20 weeks of age
	Carry out post-lay testing for vertically-transmissible agents
SUBSEQUENT GENERATIONS	Test two 5 per cent samples for avian leucosis antigen and for antibodies against specified agents between 12 and 20 weeks of age
	Test for *Salmonella* spp. and perform general clinical observation from 8 weeks of age
	Carry out routine testing for specified agents from 20 weeks of age
	Carry out post-lay testing for vertically-transmissible agents

TESTS TO BE CONDUCTED AT THE END OF THE LAYING PERIOD

Following the last egg collection, final testing to confirm the absence of vertically-transmissible agents indicated in Table 5.2.2.-1 is performed. After the last egg collection, a minimum of 5 per cent of the flock (minimum 10, maximum 200) is retained for at least 4 weeks. Blood samples are collected from every bird in the group during the 4-week period with at least 1.25 per cent of the birds (25 per cent of the sample) being bled not earlier than 4 weeks after

the final egg collection. Serum samples are tested for vertically-transmissible agents (as defined by Table 5.2.2.-1) using the methods indicated. Where sampling is performed on a weekly basis, at least 1.25 per cent of the birds (25 per cent of the sample) are tested each week during this period. Alternatively, within 4 weeks of the final egg collection blood and/or other suitable sample materials are collected from at least 5 per cent of the flock and tested for the presence of vertically-transmissible agents using validated nucleic acid amplification techniques (*2.6.21*).

ACTION TO BE TAKEN IN THE EVENT OF DETECTION OF A SPECIFIED AGENT

If evidence is found of contamination of the flock by an agent listed as slowly spreading in Table 5.2.2.-1, all materials derived from the flock during the 4-week period immediately preceding the date on which the positive sample was collected are considered unsatisfactory. Similarly, if evidence is found of contamination of the flock by an agent listed as rapidly spreading in Table 5.2.2.-1, all materials derived from the flock during the 2-week period immediately preceding the date on which the positive sample was collected are considered unsatisfactory. Any product manufactured with such materials, and for which the use of SPF materials is required, is considered unsatisfactory and must be discarded; any quality control tests conducted using the materials are invalid.

Producers must notify users of all eggs of the evidence of contamination as soon as possible following the outbreak.

Any flock in which an outbreak of any specified agent is confirmed may not be redesignated as an SPF flock. Any progeny derived from that flock during or after the 4-week period prior to the last negative sample being collected may not be designated as SPF.

01/2011:50203

5.2.3. CELL SUBSTRATES FOR THE PRODUCTION OF VACCINES FOR HUMAN USE

This general chapter deals with diploid cell lines and continuous cell lines used as cell substrates for the production of vaccines for human use; specific issues relating to vaccines prepared by recombinant DNA technology are covered by the monograph *Products of recombinant DNA technology (0784)*. Testing to be carried out at various stages (cell seed, master cell bank, working cell bank, cells at or beyond the maximum population doubling level used for production) is indicated in Table 5.2.3.-1. General provisions for the use of cell lines and test methods are given below. Where primary cells or cells that have undergone a few passages without constitution of a cell bank are used for vaccine production, requirements are given in the individual monograph for the vaccine concerned.

Diploid cell lines. A diploid cell line has a high but finite capacity for multiplication *in vitro*.

Continuous cell lines. A continuous cell line has the capacity to multiply indefinitely *in vitro*; the cells often have differences in karyotype compared to the original cells; they may be obtained from healthy or tumoral tissue either from mammals or from insects.

For injectable vaccines produced in continuous cell lines, the purification process is validated to demonstrate removal of substrate-cell DNA to a level equivalent to not more than 10 ng per single human dose, unless otherwise prescribed.

Cell-bank system. Production of vaccines in diploid or continuous cell lines is based on a cell-bank system. The *in vitro* age of the cells is counted from the master cell bank. Each working cell bank is prepared from one or more containers of the master cell bank. The use, identity and inventory control of the containers is carefully documented.

Media and substances of human or animal origin. The composition of media used for isolation and all subsequent culture is recorded in detail, and if substances of human or animal origin are used they must be free from extraneous agents (*2.6.16*) and must comply with the general chapter on *5.1.7. Viral safety*.

If human albumin is used, it complies with the monograph *Human albumin solution (0255)*.

If bovine serum is used, it complies with the monograph *Bovine serum (2262)*.

Trypsin used for the preparation of cell cultures is examined by suitable methods and shown to be sterile and free from mycoplasmas and viruses, notably pestiviruses, circoviruses and parvoviruses.

Cell seed. The data used to assess the suitability of the cell seed comprises information, where available, on source, history and characterisation.

Source of the cell seed. For human cell lines, the following information concerning the donor is recorded: ethnic and geographical origin, age, sex, general physiological condition, tissue or organ used, results of any tests for pathogens.

For animal cell lines, the following information is recorded concerning the source of the cells: species, strain, breeding conditions, geographical origin, age, sex, general physiological condition, tissue or organ used, results of any tests for pathogens.

Cells of neural origin, such as neuroblastoma and P12 cell lines, may contain substances that concentrate agents of spongiform encephalopathies and such cells are not used for vaccine production.

History of the cell seed. The following information is recorded: the method used to isolate the cell seed, culture methods, any other procedures used to establish the master cell bank, notably any that might expose the cells to extraneous agents.

Full information may not be available on the ingredients of media used in the past for cultivation of cells, for example on the source of substances of animal origin; where justified and authorised, cell banks already established using such media may be used for vaccine production.

Characterisation of the cell seed. The following properties are investigated:

(1) the identity of the cells (for example, isoenzymes, serology, nucleic acid fingerprinting);

(2) the growth characteristics of the cells and their morphological properties (optical and electron microscopes);

(3) for diploid cell lines, karyotype;

(4) for diploid cell lines, the *in vitro* life span in terms of population doubling level.

Cell substrate stability. Suitable viability of the cell line in the intended storage conditions must be demonstrated. For a given product to be prepared in the cell line, it is necessary to demonstrate that consistent production can be obtained with cells at passage levels at the beginning and end of the intended span of use.

Infectious extraneous agents. Cell lines for vaccine production shall be free from infectious extraneous agents. Tests for extraneous agents are carried out as shown in Table 5.2.3.-1 using the methods described below.

For cell lines of insect origin, tests for specific viruses relevant to the species of origin of the insect cells and for arboviruses (arthropod - borne viruses) are applied. The panel of viruses tested is chosen according to the current state of scientific knowledge.

Cell lines that show the presence of retroviruses capable of replication are not acceptable for production of vaccines.

Table 5.2.3.-1 – *Testing of cell lines*

Test	Cell seed	Master cell bank (MCB)	Working cell bank (WCB)	Cells at or beyond the maximum population doubling level used for production
1. IDENTITY AND PURITY				
Morphology	+	+	+	+
Identification: nucleic acid fingerprinting and a relevant selection of the following tests: biochemical (e.g. isoenzymes), immunological (e.g. histocompatibility), cytogenetic markers	+	+	+	+
Karyotype (diploid cell lines)	+	+	+(1)	+(1)
Life span (diploid cell lines)	–	+	+	–
2. EXTRANEOUS AGENTS				
Bacterial and fungal contamination	–	+	+	–
Mycoplasmas	–	+	+	–
Spiroplasmas (insect cell lines)	–	+	+	–
Electron microscopy (insect cell lines)	–	+(3)	–	+(3)
Tests for extraneous agents in cell cultures	–	–	+	–
Co-cultivation	–	–	+(2)	+(2)
Tests in animals and eggs	–	–	+(2)	+(2)
Specific tests for possible contaminants depending on the origin of the cells	–	–	+(2)	+(2)
Retroviruses	–	+(3)	–	+(3)
3. TUMORIGENICITY				
Tumorigenicity	+(5)	–	–	+(4)

(1) The diploid character is established for each working cell bank but using cells at or beyond the maximum population doubling level used for production.

(2) Testing is carried out for each working cell bank, but using cells at or beyond the maximum population doubling level used for production.

(3) Testing is carried out for the master cell bank, but using cells at or beyond the maximum population doubling level used for production.

(4) The MRC-5, WI-38 and FRhL-2 cell lines are recognised as being non-tumorigenic and they need not be tested. Tests are not carried out on cell lines that are known or assumed to be tumorigenic, for example CHO and BHK-21.

(5) Testing is carried out on the cell seed, but using cells at or beyond the maximum population doubling level used for production.

Tumorigenicity. For the preparation of live vaccines, the cell line must not be tumorigenic at any population doubling level used for vaccine production. Where a tumorigenic cell line is used for the production of other types of vaccine, the purification process is validated to demonstrate that residual substrate-cell DNA is reduced to a level equivalent to not more than 10 ng per single human dose of the vaccine, unless otherwise prescribed, and that substrate-cell protein is reduced to an acceptable level.

A cell line that is known to have tumorigenic potential does not have to be tested further. If a cell line is of unknown tumorigenic potential, it is either regarded as being tumorigenic or it is tested for tumorigenicity using an *in vivo* test as described below and, optionally, an *in vitro* test if additional information is needed. The tests are carried out using cells at or beyond the maximum population doubling level that will be used for vaccine production.

The MRC-5, WI-38 and FRhL-2 cell lines are recognised as being non-tumorigenic and further testing is not necessary.

Chromosomal characterisation. Diploid cell lines shall be shown to be diploid. More extensive characterisation of a diploid cell line by karyotype analysis is required if the removal of intact cells during processing after harvest has not been validated. Samples from 4 passage levels evenly spaced over the life-span of the cell line are examined. A minimum of 200 cells in metaphase are examined for exact count of chromosomes and for frequency of hyperploidy, hypoploidy, polyploidy, breaks and structural abnormalities.

The MRC-5, the WI-38 and the FRhL-2 cell lines are recognised as being diploid and well characterised; where they are not genetically modified, further characterisation is not necessary.

TEST METHODS FOR CELL CULTURES

Morphology: the morphology of the cells is adequately described and documented.

Identification. Nucleic acid fingerprint analysis and a relevant selection of the following are used to establish the identity of the cells:

(1) biochemical characteristics (isoenzyme analysis);

(2) immunological characteristics (histocompatibility antigens);

(3) cytogenetic markers.

Contaminating cells. The nucleic acid fingerprint analysis carried out for identification also serves to demonstrate freedom from contaminating cells.

Bacterial and fungal contamination. The master cell bank and each working cell bank comply with the test for sterility (*2.6.1*), carried out using for each medium 10 mL of supernatant fluid from cell cultures. Carry out the test on 1 per cent of the containers, with a minimum of 2 containers.

Mycoplasmas (*2.6.7*). The master cell bank and each working cell bank comply with the test for mycoplasmas. Use one or more containers for the test.

Spiroplasmas (insect cell lines). The master cell bank and each working cell bank of insect cells are demonstrated to be free of spiroplasmas by a validated method approved by the competent authority. Use one or more containers for the test.

Electron microscopy (insect cell lines). The master cell bank is examined by electron microscopy for the presence of adventitious agents. Cell lines are maintained at the temperature routinely used for production and taken at or beyond the maximum population doubling level. In addition, cell lines are maintained at temperatures above and below that routinely used for production and may also be subjected to other treatments such as exposure to chemical stressors. The maintenance temperatures and treatments used are agreed with the competent authority along with the number of sectioned cells to be examined.

Test for extraneous agents in cell cultures. The cells comply with the test for haemadsorbing viruses and with the tests in cell cultures for other extraneous agents given in chapter *2.6.16* under Production cell culture: control cells. If the cells are of simian origin, they are also inoculated into rabbit kidney cell cultures to test for herpesvirus B (cercopithecid herpesvirus 1).

Co-cultivation. For mammalian and avian cell lines, co-cultivate intact and/or disrupted cells separately with other cell systems including human cells and simian cells. For insect cell lines, extracts of disrupted cells are incubated with other cell systems, including human, simian, and at least 1 cell line that is different from that used in production, is permissible to insect viruses and allows detection of human arboviruses (for example BHK-21). Carry out examinations to detect possible morphological changes. Carry out tests on the cell culture fluids to detect haemagglutinating viruses, or on cells to detect haemadsorbing viruses. The test for haemagglutinating viruses does not apply for arboviruses to be detected in insect cells. The cells comply with the test if no evidence of any extraneous agent is found.

Retroviruses. Examine for the presence of retroviruses using:

(1) product-enhanced reverse transcriptase (PERT) assay (*2.6.21*) carried out for cell bank supernatants using cells at or beyond the maximum population doubling level that will be used for production;

(2) transmission electron microscopy.

If test (1) and/or test (2) gives a positive result, test (3) is carried out:

(3) infectivity assays carried out on human cells with an endpoint PERT assay on the supernatant.

Since the sensitivity of PERT assays is very high, interpretation of a positive signal may be equivocal and a decision on the acceptability of a cell substrate is based on all available data.

Tests in animals. Inject intramuscularly (or, for suckling mice, subcutaneously) into each of the following groups of animals 10^7 viable cells divided equally between the animals in each group:

(1) 2 litters of suckling mice less than 24 h old, comprising not fewer than 10 animals;

(2) 10 adult mice.

Inject intracerebrally into each of 10 adult mice 10^6 viable cells to detect the possible presence of lymphocytic choriomeningitis virus.

Observe the animals for at least 4 weeks. Investigate animals that become sick or show any abnormality to establish the cause of illness. The cells comply with the test if no evidence of any extraneous agent is found. The test is invalid if fewer than 80 per cent of the animals in each group remain healthy and survive to the end of the observation period.

Tests in eggs. Using an inoculum of 10^6 viable cells per egg, inoculate the cells into the allantoic cavity of ten 9- to 11-day-old SPF embryonated hens' eggs (*5.2.2*) and into the yolk sac of ten 5- to 6-day-old SPF embryonated hens' eggs. Incubate for not less than 5 days. Test the allantoic fluids for the presence of haemagglutinins using mammalian and avian red blood cells; carry out the test at 5 ± 3 °C and 20-25 °C and read the results after 30-60 min. The cells comply with the test if no evidence of any extraneous agent is found. The test is invalid if fewer than 80 per cent of the embryos remain healthy and survive to the end of the observation period.

Specific tests for possible contaminants depending on the origin of the cells. Tests for specific pathogens are carried out using nucleic acid amplification techniques (NAT) (*2.6.21*) with or without prior amplification in cells. Alternatively, suitable serological techniques such as enzyme-linked immunosorbent assay, serum neutralisation and anti-body production tests in suitable permissive animals may be used. For cell lines of rodent origin, use either antibody production tests in mice, rats or hamsters or nucleic acid amplification techniques (*2.6.21*) to detect species-specific viruses. Testing must take account of the origin and culture history of the cell line. The tests are designed to detect potential contaminants, particularly those that are known to infect latently the species of origin, for example simian virus 40 in rhesus monkeys or Flock house virus in insect cells.

Tests for tumorigenicity *in vivo*. The test consists in establishing a comparison between the continuous cell line and a suitable positive control (for example, HeLa or Hep2 cells).

Animal systems that have been shown to be suitable for this test include:

(1) athymic mice (Nu/Nu genotype);

(2) newborn mice, rats or hamsters that have been treated with antithymocyte serum or globulin;

(3) thymectomised and irradiated mice that have been reconstituted (T^-, B^+) with bone marrow from healthy mice.

Whichever animal system is selected, the cell line and the reference cells are injected into separate groups of 10 animals each. In both cases, the inoculum for each animal is 10^7 cells suspended in a volume of 0.2 mL, and the injection may be by either the intramuscular or the subcutaneous route. Newborn animals are treated with 0.1 mL of antithymocyte serum or globulin on days 0, 2, 7 and 14 after birth. A potent serum or globulin is one that suppresses the immune mechanisms of growing animals to the extent that the subsequent inoculum of 10^7 positive reference cells regularly produces tumours and metastases. Severely affected animals showing evident, progressively growing tumours are euthanised before the end of the test to avoid unnecessary suffering.

At the end of the observation period all animals, including the reference group(s), are euthanised and examined for gross and microscopic evidence of the proliferation of inoculated cells at the site of injection and in other organs (for example, lymph nodes, lungs, kidneys and liver).

In all test systems, the animals are observed and palpated at regular intervals for the formation of nodules at the sites of injection. Any nodules formed are measured in 2 perpendicular directions, the measurements being recorded regularly to determine whether there is progressive growth of the nodule. Animals showing nodules that begin to regress during the period of observation are euthanised before the nodules are no longer palpable, and processed for histological examination. Animals with progressively growing nodules are observed for 1-2 weeks. Among those without nodule formation, half are observed for 3 weeks and half for 12 weeks before they are euthanised and processed for histological examination. A necropsy is performed on each animal and includes examination for gross evidence of tumour formation at the site of injection and in other organs such as lymph nodes, lungs, brain, spleen, kidneys and liver.

All tumour-like lesions and the site of injection are examined histologically. In addition, since some cell lines may give rise to metastases without evidence of local tumour growth, any detectable regional lymph nodes and the lungs of all animals are examined histologically.

The test is invalid if fewer than 9 of the 10 animals injected with the positive reference cells show progressively growing tumours.

Tests for tumorigenicity *in vitro*. The following test systems may be used:

(1) colony formation in soft agar gels;

(2) production of invasive cell growth following inoculation into organ cultures;

(3) study of transformation activity using, for example, the 3T3 assay system for active oncogenes.

01/2008:50204

5.2.4. CELL CULTURES FOR THE PRODUCTION OF VETERINARY VACCINES

Cell cultures for the production of vaccines for veterinary use comply with the requirements of this section. It may also be necessary that cell cultures used for testing of vaccines for veterinary use also comply with some or all of these requirements.

For most mammalian viruses, propagation in cell lines is possible and the use of primary cells is then not acceptable.

Permanently infected cells used for production of veterinary vaccines comply with the appropriate requirements described below. The cells shall be shown to be infected only with the agent stated.

CELL LINES

Cell lines are normally handled according to a cell-seed system. Each master cell seed is assigned a specific code for identification purposes. The master cell seed is stored in aliquots at – 70 °C or lower. Production of vaccine is not normally undertaken on cells more than twenty passages from the master cell seed. Where suspension cultures are used, an increase in cell numbers equivalent to approximately three population doublings is considered equivalent to one passage. If cells beyond twenty passage levels are to be used for production, it shall be demonstrated, by validation or further testing, that the production cell cultures are essentially similar to the master cell seed with regard to their biological characteristics and purity and that the use of such cells has no deleterious effect on vaccine production.

The history of the cell line shall be known and recorded in detail (for example, origin, number of passages and media used for multiplication, storage conditions).

The method of storing and using the cells, including details of how it is ensured that the maximum number of passages permitted is not exceeded during product manufacture, are recorded. A sufficient quantity of the master cell seed and each working cell seed are kept for analytical purposes.

The tests described below are carried out (as prescribed in Table 5.2.4.-1) on a culture of the master cell seed and the working cell seed or on cell cultures from the working cell seed at the highest passage level used for production and derived from a homogeneous sample demonstrated to be representative.

Table 5.2.4.-1. – *Cell culture stage at which tests are carried out*

	Master cell seed	Working cell seed	Cell from working cell seed at highest passage level
General microscopy	+	+	+
Bacteria and fungi	+	+	–
Mycoplasmas	+	+	–
Viruses	+	+	–
Identification of species	+	–	+
Karyotype	+	–	+
Tumorigenicity	+	–	–

Characteristics of culture. The appearance of cell monolayers, before and after histological staining, is described. Information, if possible numerical data, is provided especially on the speed and rate of growth. Similarly, the presence or absence of contact inhibition, polynucleated cells and any other cellular abnormalities are specified.

Karyotype. A chromosomal examination is made of not fewer than fifty cells undergoing mitosis in the master cell seed and at a passage level at least as high as that to be used in production. Any chromosomal marker present in the master cell seed must also be found in the high passage cells and the modal number of chromosomes in these cells must not be more than 15 per cent higher than of cells of the master cell seed. The karyotypes must be identical. If the modal number exceeds the level stated, if the chromosomal markers are not found in the working cell seed at the highest level used for production or if the karyotype differs, the cell line shall not be used for manufacture.

Identification of the species. It shall be shown, by one validated method, that the master cell seed and the cells from the working cell seed at the highest passage level used for production come from the species of origin specified. When a fluorescence test is carried out and the corresponding serum to the species of origin of cells is used and shows that all the tested cells are fluorescent, it is not necessary to carry out other tests with reagents able to detect contamination by cells of other species.

Bacterial and fungal contamination. The cells comply with the test for sterility (*2.6.1*). The sample of cells to be examined consists of not less than the number of cells in a monolayer with an area of 70 cm^2 or, for cells grown in suspension, an approximately equivalent number of cells. The cells are maintained in culture for at least 15 days without antibiotics before carrying out the test.

Mycoplasmas (*2.6.7*). The cells comply with the test for mycoplasmas. The cells are maintained in culture for at least 15 days without antibiotics before carrying out the test.

Absence of contaminating viruses. The cells must not be contaminated by viruses; suitably sensitive tests, including those prescribed below, are carried out.

The monolayers tested shall have an area of at least 70 cm^2, and shall be prepared and maintained using medium and additives, and grown under similar conditions to those used for the preparation of the vaccine. The monolayers are maintained in culture for a total of at least 28 days. Subcultures are made at 7-day intervals, unless the cells do not survive for this length of time, when the subcultures are made on the latest day possible. Sufficient cells, in suitable containers, are produced for the final subculture to carry out the tests specified below.

The monolayers are examined regularly throughout the incubation period for the possible presence of cytopathic effects and at the end of the observation period for cytopathic effects, haemadsorbent viruses and specific viruses by immuno-fluorescence and other suitable tests as indicated below.

Detection of cytopathic viruses. Two monolayers of at least 6 cm^2 each are stained with an appropriate cytological stain. The entire area of each stained monolayer is examined for any inclusion bodies, abnormal numbers of giant cells or any other lesion indicative of a cellular abnormality which might be attributable to a contaminant.

Detection of haemadsorbent viruses. Monolayers totalling at least 70 cm^2 are washed several times with an appropriate buffer and a sufficient volume of a suspension of suitable red blood cells added to cover the surface of the monolayer evenly. After different incubation times cells are examined for the presence of haemadsorption.

Detection of specified viruses. Tests are carried out for freedom from contaminants specific for the species of origin of the cell line and for the species for which the product is intended. Sufficient cells on suitable supports are prepared to carry out tests for the agents specified. Suitable positive controls are included in each test. The cells are subjected to suitable tests, for example using fluorescein-conjugated antibodies or similar reagents.

Tests in other cell cultures. Monolayers totalling at least 140 cm^2 are required. The cells are frozen and thawed at least three times and then centrifuged to remove cellular debris. Inoculate aliquots onto the following cells at any time up to 70 per cent confluency:

- primary cells of the source species;
- cells sensitive to viruses pathogenic for the species for which the vaccine is intended;
- cells sensitive to pestiviruses.

The inoculated cells are maintained in culture for at least 7 days, after which freeze-thawed extracts are prepared as above and inoculated onto sufficient fresh cultures of the same cell types to allow for the testing as described below. The cells are incubated for at least a further 7 days. The cultures are examined regularly for the presence of any cytopathic changes indicative of living organisms.

At the end of this period of 14 days, the inoculated cells are subjected to the following checks:

- freedom from cytopathic and haemadsorbent organisms, using the methods specified in the relevant paragraphs above,
- absence of pestiviruses and other specific contaminants by immunofluorescence or other validated methods as indicated in the paragraph above on Detection of Specified Viruses.

Tumorigenicity. The risk of a cell line for the target species must be evaluated and, if necessary, tests are carried out.

PRIMARY CELLS

For most mammalian vaccines, the use of primary cells is not acceptable for the manufacture of vaccines since cell lines can be used. If there is no alternative to the use of primary cells, the cells are obtained from a herd or flock free from specified pathogens, with complete protection from introduction of diseases (for example, disease barriers, filters on air inlets, suitable quarantine before introduction of animals). Chicken flocks comply with the requirements prescribed in general chapter *5.2.2. Chicken Flocks Free from Specified Pathogens for the Production and Quality Control of Vaccines*. For all other species, the herd or flock is shown to be free from relevant specified pathogens. All the breeding stock in the herd or flock intended to be used to produce primary cells for vaccine manufacture is subject to a suitable monitoring procedure including regular serological checks carried out at least twice a year and two supplementary serological examinations performed in 15 per cent of the breeding stock in the herd between the two checks mentioned above.

Wherever possible, particularly for mammalian cells, a seed-lot system is used with, for example, a master cell seed formed after less than five passages, the working cell seed being no more than five passages from the initial preparation of the cell suspension from the animal tissues.

Each master cell seed, working cell seed and cells of the highest passage of primary cells are checked in accordance with Table 5.2.4.-2 and the procedure described below. The sample tested shall cover all the sources of cells used for the manufacture of the batch. No batches of vaccine manufactured using the cells may be released if any one of the checks performed produces unsatisfactory results.

Table 5.2.4.-2. – *Cell culture stage at which tests are carried out*

	Master cell seed	Working cell seed	Highest passage level
General microscopy	+	+	+
Bacteria and fungi	+	+	–
Mycoplasmas	+	+	–
Viruses	+	+	–
Identification of species	+	–	–

Characteristics of cultures. The appearance of cell monolayers, before and after histological staining, is described. Information, if possible numerical data, is recorded, especially on the speed and rate of growth. Similarly, the presence or absence of contact inhibition, polynucleated cells and any other cellular abnormalities are specified.

Identification of species. It shall be demonstrated by one validated test that the master cell seed comes from the specified species of origin.

When a fluorescence test is carried out and the corresponding serum to the species of origin of cells is used and shows that all the tested cells are fluorescent, it is not necessary to carry out other tests with reagents able to detect contamination by cells of other species.

Bacterial and fungal sterility. The cells comply with the test for sterility (*2.6.1*). The sample of cells to be examined consists of not less than the number of cells in a monolayer with an area of 70 cm^2 or for cells grown in suspension an approximately equivalent number of cells. The cells are maintained in culture for at least 15 days without antibiotics before carrying out the test.

Mycoplasmas (*2.6.7*). The cells comply with the test for mycoplasmas. The cells are maintained in culture for at least 15 days without antibiotics before carrying out the test.

Absence of contaminating viruses. The cells must not be contaminated by viruses; suitably sensitive tests, including those prescribed below are carried out.

The monolayers tested shall be at least 70 cm^2, and shall be prepared and maintained in culture using the same medium and additives, and under similar conditions to those used for the preparation of the vaccine.

The monolayers are maintained in culture for a total of at least 28 days or for the longest period possible if culture for 28 days is impossible. Subcultures are made at 7-day intervals, unless the cells do not survive for this length of time when the subcultures are made on the latest day possible. Sufficient cells, in suitable containers are produced for the final subculture to carry out the tests specified below.

The monolayers are examined regularly throughout the incubation period for the possible presence of cytopathic effects and at the end of the observation period for cytopathic effects, haemadsorbent viruses and specific viruses by immunofluorescence and other suitable tests as indicated below.

Detection of cytopathic viruses. Two monolayers of at least 6 cm^2 each are stained with an appropriate cytological stain. Examine the entire area of each stained monolayer for any inclusion bodies, abnormal numbers of giant cells or any other lesion indicative of a cellular abnormality that might be attributable to a contaminant.

Detection of haemadsorbent viruses. Monolayers totalling at least 70 cm^2 are washed several times with a suitable buffer solution and a sufficient volume of a suspension of suitable red blood cells added to cover the surface of the monolayer evenly. After different incubation times, examine cells for the presence of haemadsorption.

Detection of specified viruses. Tests are be carried out for freedom of contaminants specific for the species of origin of the cells and for the species for which the product is intended.

Sufficient cells on suitable supports are prepared to carry out tests for the agents specified. Suitable positive controls are included in each test. The cells are subjected to suitable tests using fluorescein-conjugated antibodies or similar reagents.

Tests in other cell cultures. Monolayers totalling at least 140 cm^2 are required. The cells are frozen and thawed at least three times and then centrifuged to remove cellular debris. Aliquots are inoculated onto the following cells at any time up to 70 per cent confluency:

- primary cells of the source species;
- cells sensitive to viruses pathogenic for the species for which the vaccine is intended;
- cells sensitive to pestiviruses.

The inoculated cells are maintained in culture for at least 7 days, after which freeze-thawed extracts are prepared as above, and inoculated onto sufficient fresh cultures of the same cell types to allow for the testing as described below. The cells are incubated for at least a further 7 days. All cultures are regularly examined for the presence of any cytopathic changes indicative of living organisms.

At the end of this period of 14 days, the inoculated cells are subjected to the following checks:

- freedom from cytopathic and haemadsorbent organisms is demonstrated using the methods specified in the relevant paragraphs above;
- relevant substrates are tested for the absence of pestiviruses and other specific contaminants by immunofluorescence or other validated methods as indicated in the paragraph above on Detection of Specified Viruses.

07/2009:50205

5.2.5. SUBSTANCES OF ANIMAL ORIGIN FOR THE PRODUCTION OF IMMUNOLOGICAL VETERINARY MEDICINAL PRODUCTS

1. SCOPE

Substances of animal origin (for example serum, trypsin and serum albumin) may be used during the manufacture of immunological veterinary medicinal products.

The requirements set out in this chapter apply to substances of animal origin produced on a batch basis, for use at all stages of manufacture, for example in culture media or as added constituents of products during blending. These requirements are not intended for the control of seed materials or substrates of animal origin that are covered by requirements in other pharmacopoeial texts such as the monograph *Vaccines for veterinary use (0062)* and chapter *5.2.4. Cell cultures for the production of veterinary vaccines*.

2. GENERAL PRINCIPLES AND REQUIREMENTS

Substances of animal origin comply with the requirements of the European Pharmacopoeia (where a relevant monograph exists).

Restrictions are placed on the use of substances of animal origin because of safety concerns associated with pathogens that may be present in them and epidemiological and/or regulatory concerns associated with the presence of particular antigens (either live or inactivated).

General principles:

- it is recommended to minimise, wherever practicable, the use of substances of animal origin;
- unless otherwise justified, the use of substances of animal origin as constituents in the formulation of medicinal products is not acceptable except where such substances are subject to a treatment validated for the inactivation of live extraneous agents.

General requirements:

- any batch of substance (after inactivation and/or processing, if relevant) found to contain or suspected of containing any living extraneous agent shall be discarded or used only in exceptional and justified circumstances; to be accepted for use, further processing must be applied that will ensure elimination and/or inactivation of the extraneous agent, and it shall then be demonstrated that the elimination and/or inactivation has been satisfactory;
- any batch of substance that, as concluded from the risk assessment, may induce an unacceptable detectable immune response in the target species as a consequence of contamination with inactivated extraneous agents, must not be used for the manufacture of that particular immunological veterinary medicinal product.

3. RISK MANAGEMENT

No single measure or combination of measures can guarantee the safety of the use of substances of animal origin, but they can reduce the risk from such use. It is therefore necessary for the manufacturer of immunological veterinary medicinal products to take account of this when choosing a substance of animal origin to use in manufacture, and to conduct a risk assessment, taking into account the origin of the substance and the manufacturing steps applied to it.

In addition, risk management procedures must be applied. Any residual risk must be evaluated in relation to the potential benefits derived from the use of the substance for the manufacture of the immunological veterinary medicinal product.

3-1. *RISK ASSESSMENT*

The risk assessment must take account of the animal diseases occurring in the country of origin of the animals used as a source of the substance, the potential infectious diseases occurring in the source species and the likely infectivity in the source organ or tissue. From this information, as part of the risk assessment, a list can be prepared of the extraneous agents that may be present in the substance.

The risk of contamination of the substance and the resultant immunological veterinary medicinal product with living extraneous agents needs to be assessed. The risk of contamination of the substance and the resultant immunological veterinary medicinal product with inactivated extraneous agents may also need to be taken into account. This would be the case if, for example, the contaminant was one from which a European country is officially free and/or is the subject of a specific disease control program in a European country and where the presence of the inactivated agent could lead to the stimulation of a detectable immune response in recipient animals.

As part of the risk assessment, the presence in the substance of antibodies that can interfere with the detection and/or inactivation of living extraneous agents must also be taken into account.

The risk assessment may need to be repeated and the risk management steps described below re-evaluated and revised in order to take account of changes:

- in the incidence of diseases occurring in the country or countries of origin of animals used as the source for the substance, including emerging diseases (new pathogens);
- in the incidence of diseases and of disease control measures applied in the European countries in which immunological veterinary medicinal products manufactured with the substance are used.

3-2. *RISK CONTROL*

For each of the potential extraneous agents identified by the risk assessment, and taking into account the proposed use of the substance, the risk must be controlled by the use of one or a combination of the followings measures:

- placing restrictions on the source of the material and auditing this;
- using validated inactivation procedures;
- demonstrating the ability of a production step to remove or inactivate extraneous agents;
- testing for extraneous agents.

4. CONTROL MEASURES

4-1. *SOURCE*

All substances of animal origin used in the manufacture (including blending) of immunological veterinary medicinal products must be from a known and documented source (including species of origin and country of origin of source animals and tissues).

4-2. *PREPARATION*

Substances of animal origin are prepared from a homogeneous bulk designated with a batch number. A batch may contain substances derived from as many animals as desired but once defined and given a batch number, the batch is not added to or contaminated in any way.

The production method used to prepare the substance of animal origin from the raw material may contribute to the removal and/or inactivation of extraneous agents (see section 4-3).

4-3. *INACTIVATION AND/OR OTHER PROCESSING STEPS FOR REMOVAL OF EXTRANEOUS AGENTS*

The inactivation procedure and/or other processing steps chosen shall have been validated and shown to be capable of reducing the titre of potential extraneous agents described below in the substance concerned by a factor of at least 10^6. If this reduction in titre cannot be shown experimentally, a maximum pre-treatment titre of the extraneous agent must be set, taking into account the reduction in titre afforded by the inactivation/processing step and including a safety margin factor of 100; each batch of substance must be tested to determine the pre-treatment starting titre and confirm it is no greater than the specified limit, unless proper risk assessment, based on valid and suitable data, shows that titres will always be at least 100-fold below the titre that can effectively be inactivated.

The validation of the procedure(s) is conducted with a suitable representative range of viruses covering different types and sizes (enveloped and non-enveloped, DNA and RNA, single- and double-stranded, temperature- and pH-resistant), including test viruses with different degrees of resistance, taking into account the type of procedure(s) to be applied and the viruses that may be present in the material. The evidence for the efficacy of the procedure may take the form of references to published literature and/or experimental data generated by the manufacturer, but must be relevant to the conditions that will be present during the production and inactivation/processing of the substance.

For inactivated immunological veterinary medicinal products, the method used for inactivation of the active ingredient may also be validated for inactivation of possible contaminants from substances of animal origin used in the manufacture of this active ingredient.

4-4. *TESTS*

Depending on the outcome of the risk assessment and the validation data available for any procedure applied, tests for extraneous agents may be conducted on each batch before and/or after the application of an inactivation/processing step. For examination of the substance for freedom from extraneous agents, any solids are dissolved or suspended in a suitable medium to provide a suitable preparation for testing. A sufficient quantity of the preparation is tested to give a suitably sensitive test, as established in the validation studies. As well as tests for living extraneous agents, tests may need to be conducted for the presence of inactivated extraneous agents, depending on the risks identified.

Freedom from living extraneous viruses. A sample from each batch of the substance is tested for extraneous viruses by general and specific tests. These tests are validated with respect to sensitivity and specificity for detection of a suitable range of potential extraneous viruses. Suitably sensitive cell cultures are used for the tests for extraneous viruses, including primary cells from the same species as the substance to be examined.

General test. The inoculated cell cultures are observed regularly for 21 days for cytopathic effects. At the end of each 7-day period, a proportion of the original cultures is fixed, stained and examined for cytopathic effects, and a proportion is tested for haemadsorbing agents.

Specific tests. A proportion of the cells available at the end of the general test is tested for specific viruses. The specific viruses to be tested for are potential extraneous viruses that are identified through the risk assessment and that would not be detected by the general test. A test for pestiviruses is conducted if the source species is susceptible to these.

Bacteria and fungi. Before use, substances are tested for sterility (*2.6.1*), or sterilised to inactivate any bacterial or fungal contaminants.

Mycoplasma. Before use, substances are tested for freedom from mycoplasma (*2.6.7*), or sterilised to inactivate any mycoplasmal contaminants.

04/2013:50206

5.2.6. EVALUATION OF SAFETY OF VETERINARY VACCINES AND IMMUNOSERA

The term 'product' means either a vaccine or an immunoserum throughout the text.

During development, safety tests are carried out in the target species to show the risks from use of the product.

Immune status for tests on vaccines. The immune status of animals to be used for the safety test is specified in the specific monograph. For most monographs, 1 of the 3 following categories is specified:

1) the animals must be free from antibodies against the virus/bacterium/toxin etc. contained in the vaccine;

2) the animals are preferably free from antibodies against the virus/bacterium/toxin etc. contained in the vaccine, but animals with a low level of antibody may be used as long as the animals have not been vaccinated and the administration of the vaccine does not cause an anamnestic response;

3) the animals must not have been vaccinated against the disease that the vaccine is intended to prevent.

As a general rule, category 1 is specified for live vaccines. For other vaccines, category 2 is usually specified, but where most animals available for use in tests would comply with

category 1, this may be specified for inactivated vaccines also. Category 3 is specified for some inactivated vaccines where determination of antibodies prior to testing is unnecessary or impractical. For poultry vaccines, as a general rule the use of specified-pathogen-free (SPF) birds is specified.

For avian vaccines, the safety test is generally carried out using SPF chickens (*5.2.2*), except that for vaccines not recommended for use in chickens it is carried out using birds of one of the species for which the vaccine is recommended, the birds being free from antibodies against the disease agent for which the vaccine is intended to provide protection.

Vaccines. In laboratory tests, 'dose' means that quantity of the product to be recommended for use and containing the maximum titre or potency likely to be contained in production batches. Live vaccines are prepared only from strains of organisms that have been shown to be safe. For live vaccines, use a batch or batches of vaccine containing virus/bacteria at the least attenuated passage level that will be present in a batch of vaccine.

For combined vaccines, the safety shall be demonstrated; for live components of combined vaccines, compliance with the special requirements for live vaccines stated below shall be demonstrated separately for each vaccine strain.

For inactivated vaccines, safety tests carried out on the combined vaccine may be regarded as sufficient to demonstrate the safety of the individual components.

Immunosera. In the tests, 'dose' means the maximum quantity of the product to be recommended for use and containing the maximum potency and maximum total protein likely to be contained in production batches. In addition, if appropriate, the dose tested also contains maximum quantities of immunoglobulin or gammaglobulin.

The tests described below, modified or supplemented by tests described in the Production section of a monograph, may be carried out as part of the tests necessary during development to demonstrate the safety of the product.

1. LABORATORY TESTS

1-1. *SAFETY OF THE ADMINISTRATION OF 1 DOSE*

For each of the recommended routes of administration, administer 1 dose of product to animals of each species and category for which use of the product is to be recommended. This must include animals of the youngest recommended age and pregnant animals, if appropriate.

For vaccines intended for use in mammals, in general 8 animals per group are used unless otherwise justified or specified in a specific monograph.

For fish vaccines administered by immersion, bathe the fish for twice the recommended time using a bath at twice the recommended concentration.

For vaccines intended for use in fish, in general 50 fish per group are used unless otherwise justified or specified in a specific monograph.

For vaccines intended for use in birds older than 3 weeks, in general 8 birds per group are used unless otherwise justified or specified in a specific monograph. For vaccines intended for use in birds younger than 3 weeks, in general 10 birds per group are used unless otherwise justified or specified in a specific monograph.

The animals are observed and examined at least daily for signs of abnormal local and systemic reactions. Where appropriate, these studies shall include detailed post-mortem macroscopic and microscopic examinations of the injection site. Other objective criteria are recorded, such as body temperature (for mammals) and performance measurements. The body temperatures are recorded on at least the day before and at the time of administration of the product, 4 h later and on the following 4 days. The animals are observed and examined at least daily until reactions may no longer be expected but, in all cases, the observation and examination period extends at least until 14 days after administration.

Unless otherwise prescribed in a specific monograph or, in the absence of a specific monograph, unless otherwise justified and authorised, the vaccine complies with the test if no animal shows abnormal local or systemic reactions or signs of disease, or dies from causes attributable to the vaccine.

1-2. *SAFETY OF 1 ADMINISTRATION OF AN OVERDOSE*

Overdose testing is required only for live vaccines. An overdose of the product is administered by each recommended route of administration to animals of the categories of the target species that are expected to be the most sensitive, such as animals of the youngest age. If multiple routes and methods of administration are specified for the product concerned, administration by all routes is recommended. If 1 route of administration has been shown to cause the most severe effects, this single route may be selected as the only one for use in the study. The overdose normally consists of 10 doses of a live vaccine. For freeze-dried live vaccines, the 10 doses shall be reconstituted in a suitable volume of diluent for the test. For vaccines intended for use in mammals, in general 8 animals per group are used unless otherwise justified or specified in a specific monograph. For vaccines intended for use in fish, in general 50 fish per group are used unless otherwise justified or specified in a specific monograph. For vaccines intended for use in birds older than 3 weeks, in general 8 birds per group are used unless otherwise justified or specified in a specific monograph. For vaccines intended for use in birds younger than 3 weeks, in general 10 birds per group are used unless otherwise justified or specified in a specific monograph. The animals are observed and examined at least daily for signs of local and systemic reactions. Other objective criteria are recorded, such as body temperature (for mammals) and performance measurements. The animals are observed and examined for at least 14 days after administration.

Unless otherwise prescribed in a specific monograph or, in the absence of a specific monograph, unless otherwise justified and authorised, the vaccine complies with the test if no animal shows abnormal local or systemic reactions or signs of disease, or dies from causes attributable to the vaccine.

1-3. *SAFETY OF THE REPEATED ADMINISTRATION OF 1 DOSE*

Repeated administration of 1 dose may be required to reveal any adverse effects induced by such administration. These tests are particularly important where the product, notably an immunoserum, may be administered on several occasions over a relatively short period of time. These tests are carried out on the most sensitive categories of the target species, using each recommended route of administration. If multiple routes and methods of administration are specified for the product concerned, administration by all routes is recommended. If 1 route of administration has been shown to cause the most severe effects, this single route may be selected as the only one for use in the study. The number of administrations must be not less than the maximum number recommended; for vaccines, this shall take account of the number of administrations for primary vaccination and the 1st re-vaccination; for immunosera, it shall take account of the number of administrations required for treatment. The interval between administrations shall be suitable (e.g. period of risk or required for treatment) and appropriate to the recommendations of use. Although, for convenience, as far as vaccines are concerned, a shorter interval may be used in the study than that recommended in the field, an interval of at least 14 days must be allowed between administrations for the development of any hypersensitivity reaction. For immunosera, however, administration shall follow the recommended schedule. For vaccines intended for use in mammals, in general 8 animals per group are used unless otherwise justified or specified in a specific monograph. For vaccines intended for use in fish, in general 50 fish per group are used unless otherwise justified or specified in a specific monograph. For vaccines intended for use in birds older than 3 weeks, in general 8 birds per group are used unless otherwise

justified or specified in a specific monograph. For vaccines intended for use in birds younger than 3 weeks, in general 10 birds per group are used unless otherwise justified or specified in a specific monograph. The animals are observed and examined at least daily for at least 14 days after the last administration for signs of systemic and local reactions. Other objective criteria are recorded, such as body temperature and performance measurements.

Unless otherwise prescribed in a specific monograph or, in the absence of a specific monograph, unless otherwise justified and authorised, the product complies with the test if no animal shows abnormal local or systemic reactions or signs of disease, or dies from causes attributable to the product.

1-4. *EXAMINATION OF REPRODUCTIVE PERFORMANCE*

When the vaccine is recommended for use or may be used in pregnant animals or laying birds, carry out a test for safety in this category of animals. If the reproductive safety studies are not performed, an exclusion statement appears on the label, unless a scientific justification for absence of risk is provided. Examination of reproductive performance must also be considered when data suggest that the starting material from which the product is derived may be a risk factor. Where appropriate, reproductive performance of males and females and harmful effects on the progeny, including teratogenic or abortifacient effects, are investigated by each of the recommended routes of administration. If multiple routes and methods of administration are specified for the product concerned, administration by all routes is recommended. If 1 route of administration has been shown to cause the most severe effects, this single route may be selected as the only one for use in the study.

For vaccines intended for use in mammals, in general 8 animals per group are used unless otherwise justified or specified in a specific monograph. Vaccines recommended for use or that may be used in pregnant animals, are tested in each of the specific periods of gestation recommended for use on the label. An exclusion statement will be required for those gestation periods not tested.

The observation period is extended to parturition, to examine any harmful effects during gestation or on progeny, unless otherwise justified or specified in a specific monograph.

The following protocol is given as an example of an appropriate test for vaccines.

Safety in pregnant animals. Use not fewer than 8 animals per group, at the recommended stage of gestation or at a range of stages of gestation according to the recommended schedule. Not fewer than 8 animals are used for each stage of pregnancy (i.e. 24 animals for 3 trimesters of pregnancy in cattle). Administer to each animal a recommended dose of the vaccine. If the recommended schedule requires a 2nd dose, administer another dose after an interval of at least 14 days. Unless otherwise prescribed in a specific monograph, observe the animals at least daily until 1 day after parturition. Unless otherwise prescribed in a specific monograph, or, in the absence of a specific monograph, unless otherwise justified and authorised, the vaccine complies with the test if no animal shows abnormal local or systemic reactions or signs of disease, or dies from causes attributable to the vaccine, and if no adverse effects on the pregnancy or the offspring are noted.

1-5. *RESIDUES*

In the case of live vaccines for well-established zoonotic diseases, the determination of residual vaccine organisms at the injection site may be required, in addition to the studies of dissemination described below.

1-6. *ADVERSE EFFECTS ON IMMUNOLOGICAL FUNCTIONS*

Where the product might adversely affect the immune response of the animal to which the product is administered or of its progeny, suitable tests on the immunological functions are carried out.

1-7. *ADVERSE EFFECTS FROM INTERACTIONS*

Studies are undertaken to show a lack of adverse effect on the safety of the product when simultaneous administration is recommended or where administration of the product is recommended as part of a schedule of administration of products within a short period of time.

1-8. *SPECIAL REQUIREMENTS FOR LIVE VACCINES*

The following laboratory tests must also be carried out with live vaccines.

For the following tests except for the test for increase in virulence (section 1-8-3), use the vaccine strain at the least attenuated passage level that will be present between the master seed lot and a batch of vaccine.

1-8-1. **Spread of the vaccine strain**. Spread of the vaccine strain from vaccinated to unvaccinated target animals is investigated using the recommended route of administration most likely to result in spread. Moreover, it may be necessary to investigate the safety of spread to non-target species that could be highly susceptible to a live vaccine strain. An assessment must be made of how many animal-to-animal passages are likely to be sustainable under normal circumstances together with an assessment of the likely consequences.

1-8-2. **Dissemination in vaccinated animal**. Faeces, urine, milk, eggs, and oral, nasal and other secretions shall be tested for the presence of the organism as appropriate. Moreover, studies may be required of the dissemination of the vaccine strain in the body, with particular attention being paid to the predilection sites for replication of the organism. In the case of live vaccines for well-established zoonotic diseases for food-producing animals, these studies are obligatory and shall particularly take into account the persistence of the strain at the injection site.

1-8-3. **Increase in virulence**. Unless otherwise prescribed in a specific monograph or, in the absence of a specific monograph, unless otherwise justified and authorised, the following applies. This test is carried out using the master seed lot. If the quantity of the master seed lot sufficient for performing the test is not available, the lowest passage material used for the production that is available in sufficient quantity may be used. At the time of inoculation, the animals in all groups are of an age suitable for recovery of the strain. Serial passages are carried out in target animals using 5 groups of animals, unless there is justification to carry out more passages or unless the strain disappears from the test animal sooner. *In vitro* propagation may not be used to expand the passage inoculum.

The passages are carried out using animals most appropriate to the potential risk being assessed.

The initial administration is carried out using the recommended route of administration most likely to lead to reversion to virulence, using an initial inoculum containing the maximum release titre. After this, not fewer than 4 further serial passages through animals of the target species are undertaken. The passages are undertaken by the route of administration most likely to lead to reversion to virulence. If the properties of the strain allow sequential passage via natural spreading, this method may be used, otherwise passage as described in each specific monograph is carried out and the micro-organisms that have been recovered at the final passage are tested for increase in virulence. For the first 4 groups, a minimum of 2 animals is used for mammalian vaccines, and a minimum of 5 birds is used for avian vaccines. The last group consist of a minimum of 8 mammals or 10 birds. At each passage, the presence of living vaccine-derived micro-organisms in the material used for passage is demonstrated. Care must be taken to avoid contamination by micro-organisms from previous passages. When the micro-organism is not recovered from any intermediate *in vivo* passage, repeat the passage in 10 animals using *in vivo* passaged material from the last passage in which the micro-organism was recovered. The micro-organism recovered is used as the inoculum for the next passage. If the

target micro-organism is not recovered, the experiment is considered to be completed with the conclusion that the target micro-organism does not show an increase in virulence.

General clinical observations are made during the study. Animals in the last group are observed for 21 days unless otherwise justified. These observations include all relevant parameters typical for the disease that could indicate increase in virulence. Compare the clinical signs and other relevant parameters with those observed in the animals used in the test for safety of the administration of 1 dose (section 1-1). If the last group of animals shows no evidence of an increase in virulence, further testing is not required. Otherwise, material used for the 1st passage and the microorganisms recovered at the final passage level are used in a separate experiment using at least 8 animals per group for mammal vaccines and at least 10 birds per group for avian vaccines, to compare directly the clinical signs and other relevant parameters. This study is carried out using the route of administration that was used for previous passages. An alternative route of administration may be used if justified.

Unless otherwise justified and authorised, the product complies with the test if no animal dies or shows signs attributable to the vaccine strain and no indication of increased virulence is observed in the animals of the last group.

1-8-4. **Biological properties of the vaccine strain**. Other tests may be necessary to determine as precisely as possible the intrinsic biological properties of the vaccine strain (for example, neurotropism). For vector vaccines, evaluation is made of the risk of changing the tropism or virulence of the strain and where necessary specific tests are carried out. Such tests are systematically carried out where the product of a foreign gene is incorporated into the strain as a structural protein.

1-8-5. **Recombination or genomic reassortment of strain.** The probability of recombination or genomic reassortment with field or other strains shall be considered.

2. FIELD STUDIES

Results from laboratory studies shall normally be supplemented with supportive data from field studies. Provided that laboratory tests have adequately assessed the safety and efficacy of a product under experimental conditions using vaccines of maximum and minimum titre or potency respectively, a single batch of product may be used to assess both safety and efficacy under field conditions. In these cases, a typical routine batch of intermediate titre or potency may be used.

For food-producing mammals, the studies include measurement of the body temperatures of a sufficient number of animals, before and after administration of the product; for other mammals, such measurements are carried out if the laboratory studies indicate that there might be a problem. The size and persistence of any local reaction and the proportion of animals showing local or systemic reactions are recorded. Performance measurements are made, where appropriate.

Performance measures for broilers include weekly mortality, feed conversion ratios, age at slaughter and weight, down grading and rejects at the processing plant. For vaccines for use in laying birds or in birds that may be maintained to lay, the effect of the vaccine on laying performance and hatchability is investigated, as appropriate.

3. ECOTOXICITY

An assessment is made of the potential harmful effects of the product for the environment and any necessary precautionary measures to reduce such risks are identified. The likely degree of exposure of the environment to the product is assessed, taking into account: the target species and mode of administration; excretion of the product; and disposal of unused product. If these factors indicate that there will be significant exposure of the environment to the product, the potential ecotoxicity is evaluated, taking into account the properties of the product.

04/2008:50207

5.2.7. EVALUATION OF EFFICACY OF VETERINARY VACCINES AND IMMUNOSERA

The term 'product' means either a vaccine or an immunoserum throughout the text.

During development of the product, tests are carried out to demonstrate that the product is efficacious when administered by each of the recommended routes and methods of administration and using the recommended schedule to animals of each species and category for which use of the product is to be recommended. The type of efficacy testing to be carried out varies considerably depending on the particular type of product.

As part of tests carried out during development to establish efficacy, the tests described in the Production section of a monograph may be carried out; the following must be taken into account.

The dose to be used is that quantity of the product to be recommended for use and containing the minimum titre or potency expected at the end of the period of validity.

For live vaccines, use vaccine containing virus/bacteria at the most attenuated passage level that will be present in a batch of vaccine.

For immunosera, if appropriate, the dose tested also contains minimum quantities of immunoglobulin or gammaglobulin and/or total protein.

The efficacy evidence must support all the claims being made. For example, claims for protection against respiratory disease must be supported at least by evidence of protection from clinical signs of respiratory disease. Where it is claimed that there is protection from infection this must be demonstrated using re-isolation techniques. If more than one claim is made, supporting evidence for each claim is required.

Vaccines. The influence of passively acquired and maternally derived antibodies on the efficacy of a vaccine is adequately evaluated. Any claims, stated or implied, regarding onset and duration of protection shall be supported by data from trials.

Claims related to duration of immunity are supported by evidence of protection. The test model described under Immunogenicity and/or Potency is not necessarily used to support claims regarding the duration of immunity afforded by a vaccine.

The efficacy of each of the components of multivalent and combined vaccines shall be demonstrated using the combined vaccine.

Immunosera. Particular attention must be paid to providing supporting data for the efficacy of the regime that is to be recommended. For example, if it is recommended that the immunoserum needs only to be administered once to achieve a prophylactic or therapeutic effect then this must be demonstrated. Any claims, stated or implied, regarding onset and duration of protection or therapeutic effect must be supported by data from trials. For example, the duration of the protection afforded by a prophylactic dose of an antiserum must be studied so that appropriate guidance for the user can be given on the label.

Studies of immunological compatibility are undertaken when simultaneous administration is recommended or where it is a part of a usual administration schedule. Wherever a product is recommended as part of an administration scheme, the priming or booster effect or the contribution of the product to the efficacy of the scheme as a whole is demonstrated.

LABORATORY TESTS

In principle, demonstration of efficacy is undertaken under well-controlled laboratory conditions by challenge of the target animal under the recommended conditions of use.

In so far as possible, the conditions under which the challenge is carried out shall mimic the natural conditions for infection, for example with regard to the amount of challenge organism and the route of administration of the challenge.

Vaccines. Unless otherwise justified, challenge is carried out using a strain different from the one used in the production of the vaccine.

If possible, the immune mechanism (cell-mediated/humoral, local/general, classes of immunoglobulin) that is initiated after the administration of the vaccine to target animals shall be determined.

Immunosera. Data are provided from measurements of the antibody levels achieved in the target species after administration of the product, as recommended. Where suitable published data exist, references are provided to relevant published literature on protective antibody levels and challenge studies are avoided.

Where challenges are required, these can be given before or after administration of the product, in accordance with the indications and specific claims to be made.

FIELD TRIALS

In general, results from laboratory tests are supplemented with data from field trials, carried out, unless otherwise justified, with untreated control animals. Provided that laboratory tests have adequately assessed the safety and efficacy of a product under experimental conditions using vaccines of maximum and minimum titre or potency respectively, a single batch of product could be used to assess both safety and efficacy under field conditions. In these cases, a typical routine batch of intermediate titre or potency may be used. Where laboratory trials cannot be supportive of efficacy, the performance of field trials alone may be acceptable.

07/2011:50208

5.2.8. MINIMISING THE RISK OF TRANSMITTING ANIMAL SPONGIFORM ENCEPHALOPATHY AGENTS VIA HUMAN AND VETERINARY MEDICINAL PRODUCTS

This chapter is identical with the Note for Guidance on Minimising the Risk of Transmitting Animal Spongiform Encephalopathy Agents via Human and Veterinary Medicinal Products – Revision 3, (EMA/410/01 rev. 3).

Contents

1. INTRODUCTION
1-1. Scientific background
1-2. Regulatory compliance
2. SCOPE
3. GENERAL CONSIDERATIONS
3-1. Scientific principles for minimising risk
3-2. Animal source
3-2-1. Geographical sourcing
3-2-1-1. Bovine materials
3-2-1-2. Sheep and goats (small ruminants)
3-2-2. BSE negligible risk (closed) bovine herds
3-3. Animal parts, body fluids and secretions as starting material
3-4. Age of animals
3-5. Manufacturing Process
4. RISK ASSESSMENT OF MATERIALS OR SUBSTANCES USED IN THE MANUFACTURE AND PREPARATION OF A MEDICINAL PRODUCT IN THE CONTEXT OF REGULATORY COMPLIANCE
5. BENEFIT/RISK EVALUATION
6. SPECIFIC CONSIDERATIONS
6-1. Collagen
6-2. Gelatin
6-3. Bovine blood and blood derivatives
6-4. Tallow derivatives
6-5. Animal charcoal
6-6. Milk and milk derivatives
6-7. Wool derivatives
6-8. Amino acids
6-9. Peptones

1. INTRODUCTION

1-1. *SCIENTIFIC BACKGROUND*

Transmissible Spongiform Encephalopathies (TSEs) are chronic degenerative nervous diseases characterised by the accumulation of an abnormal isoform of a cellular glycoprotein (known as PrP or prion protein). The abnormal isoform of PrP (PrP^{TSE}) differs from normal PrP (PrPc) in being highly resistant to protease and heat denaturation treatments. PrP^{TSE} is considered to be the infective agent responsible for transmitting TSE disease.

TSE diseases in animals include:

- bovine spongiform encephalopathy (BSE) in cattle,
- scrapie in sheep and goats,
- chronic wasting disease (CWD) in cervids (deer and elk),
- transmissible mink encephalopathy (TME) in farmed mink,
- feline spongiform encephalopathy (FSE) in felids (specifically domestic cats and captive large cats), and
- spongiform encephalopathy of exotic ungulates in zoos.

In humans, spongiform encephalopathies include different forms of Creutzfeldt-Jakob Disease (CJD), Kuru, Gerstmann-Sträussler-Scheinker Syndrome (GSS), and Fatal Familial Insomnia (FFI).

Iatrogenic transmission of spongiform encephalopathies has been reported. In sheep, scrapie has been accidentally transmitted by the use of Louping Ill vaccine prepared from pooled, formaldehyde treated ovine brain and spleen in which material from scrapie-infected sheep had been inadvertently incorporated. Also, transmission of scrapie to sheep and goats occurred following use of a formol-inactivated vaccine against contagious agalactia, prepared with brain and mammary gland homogenates of sheep infected with *Mycoplasma agalactiae.* In man, cases of transmission of CJD have been reported which have been attributed to the parenteral administration of growth hormone and gonadotropin derived from human cadaveric pituitary glands. Cases of CJD have also been attributed to the use of contaminated instruments in brain surgery and with the transplantation of human dura mater and cornea.

Interspecies TSE transmission is restricted by a number of natural barriers, transmissibility being affected by the species of origin, the prion strain, dose, route of exposure and, in some species, the host allele of the PRNP gene. Species barriers can be crossed under appropriate conditions.

BSE was first diagnosed in the United Kingdom in 1986 and a large number of cattle and individual herds have been affected. It is clear that BSE is a food borne disease associated with feed (e.g. meat and bone meal) derived from TSE affected animals. Other countries have experienced cases of BSE, either in animals imported from the United Kingdom or in indigenous animals. There is convincing evidence to show that the variant form of CJD (vCJD) is caused by the agent which is responsible for BSE in cattle. Therefore, a cautious approach

continues to be warranted if biological materials from species naturally affected by TSE diseases, especially bovine species, are used for the manufacture of medicinal products.

In the course of active surveillance programs, two previously unrecognized forms of atypical BSE (BSE-L, also named BASE, and BSE-H) have been identified in rare sporadic cases from Europe, North America, and Japan. The 'L' and 'H' identify the higher and lower electrophoretic positions of their protease-resistant PrP^{TSE} isoforms. It is noteworthy that atypical cases have been found in countries that did not experience classical BSE so far, like Sweden, or in which only few classical BSE cases have been found like Canada or USA. The atypical BSE agent has been experimentally transmitted to transgenic mice expressing the human prion protein and to a cynomolgus monkey.

Scrapie occurs worldwide and has been reported in most European countries. It has the highest incidence in Cyprus. While humans have been exposed to naturally occurring scrapie for over 250 years, there is no epidemiological evidence directly linking scrapie to spongiform encephalopathies in humans[(1)]. However, there remains a theoretical and currently unquantifiable risk that some BSE-contaminated protein supplement may have been fed to sheep. Further, it should also be assumed that any BSE agent introduced into the small ruminant population via contaminated feed is likely to be recycled and amplified[(2)].

There is interest in infecting cells with TSE agents to develop assays and for basic scientific reasons. Some success has been reported, usually but not always with neural cell lines. The conditions needed to infect a cell are not well understood and the process is difficult requiring particular combinations of agent and cell. It is not considered appropriate to make specific recommendations in terms of cell substrates to be used for production of biological/biotechnology-derived substances. Nevertheless, the possibility of infection of cell lines with TSE agents should be taken into account in risk assessments.

1-2. *REGULATORY COMPLIANCE*

Risk assessment. Since the use of animal-derived materials is unavoidable for the production of some medicinal products and that complete elimination of risk at source is rarely possible, the measures taken to manage the risk of transmitting animal TSEs via medicinal products represent risk minimisation rather than risk elimination. Consequently, the basis for regulatory compliance should be based on a risk assessment, taking into consideration all pertinent factors as identified in this chapter (see below).

Legal basis. The note for guidance is published by the European Commission following

- Annex I, part I, module 3, section 3.2: *Content: basic principles and requirements*, point (9) of Directive 2001/83/EC of the European Parliament and of the Council of 6 November 2001 on the Community code relating to medicinal products for human use[(3)], as amended, and
- Annex I, Title I, part 2, section C *Production and control of starting material* of Directive 2001/82/EC of the European Parliament and of the Council of 6 November 2001 on the Community code relating to veterinary medicinal products[(4)], as amended.

These directives require that applicants for marketing authorisation for human and veterinary medicinal products must demonstrate that medicinal products are manufactured in accordance with the latest version of this note for guidance published in the *Official Journal of the European Union*. This is a continuing obligation after the marketing authorisation has been granted.

By definition, the principle of Specified Risk Materials as defined in Regulation (EC) No 999/2001 of the European Parliament and of the Council[(5)] does not apply to medicinal products. However, Regulation (EC) No 1774/2002 of the European Parliament and of the Council[(6)], which applies since 1st May 2003, lays down health rules concerning animal by-products not intended for human consumption. As a general rule, and unless properly justified, all animal by-products used as starting materials in the manufacture of medicinal products should be 'Category 3 (i.e. safe) materials or equivalent', as defined in Regulation (EC) No 1774/2002. Justification for the use of substances derived from other, high infectivity materials must follow an appropriate benefit/risk evaluation (see further below).

The note for guidance should be read in conjunction with the various EU legal instruments including Commission decisions progressively implemented since 1991. Where appropriate, references to these decisions are given in the text. Position statements and explanatory notes made by the Committee for Medicinal Products for Human Use (CHMP) and Committee for Medicinal Products for Veterinary Use (CVMP) are still applicable for the purpose of regulatory compliance unless otherwise superseded by the note for guidance.

The general monograph *Products with risk of transmitting agents of animal spongiform encephalopathies* of the European Pharmacopoeia refers to this chapter, which is identical with the note for guidance. The monograph forms the basis for issuing Certificates of Suitability as a procedure for demonstrating TSE compliance for substances and materials used in the manufacture of human and veterinary medicinal products.

Clarification of note for guidance. As the scientific understanding of TSEs, especially the pathogenesis of the diseases, is evolving, from time to time CHMP and its Biologics Working Party in collaboration with CVMP and its Immunologicals Working Party may be required in the future to develop supplementary guidance in the form of position statements or explanatory notes for the purpose of clarifying the note for guidance. The supplementary guidance shall be published by the Commission and on the website of the European Medicines Agency and taken into consideration accordingly in the scope of the certification of the European Directorate for the Quality of Medicines & HealthCare (EDQM).

2. SCOPE

TSE-RELEVANT ANIMAL SPECIES

Cattle, sheep, goats and animals that are naturally susceptible to infection with transmissible spongiform encephalopathy agents or susceptible to infection through the oral route other than humans[(7)] and non-human primates are defined as "TSE-relevant animal species"[(8)].

MATERIALS

This chapter is concerned with materials derived from "TSE-relevant animal species" that are used for the preparation of:

- active substances,

(1) This is currently being assessed by EFSA and ECDC. For updated information, please refer to the following link: http://registerofquestions.efsa.europa.eu/roqFrontend/questionsListLoader?mandate=M-2009-0221
(2) In January 2005, after confirmation of BSE in a goat in France, additional legislative measures were taken related to monitoring and an increased testing of small ruminants. The increased surveillance did not identify additional cases of BSE in sheep and goats in the EU.
(3) OJ L 311, 28.11.2001, p. 67.
(4) OJ L 311, 28.11.2001, p. 1.
(5) OJ L 147, 31.5.2001, p. 1.
(6) OJ L 273, 10.10.2002, p. 1. Regulation (EC) 1774/2002 has been repealed by Regulation (EC) 1069/2009 that will apply from 4 March 2011 (OJ L 300, 14.11.2009, p. 1).
(7) Regulatory guidance and position papers have been issued by the Committee for Medicinal Products for Human Use and its Biologics Working Party on human tissue derived medicinal products in relation to CJD and vCJD. Such guidance can be found on http://www.ema.europa.eu
(8) Pigs and birds, which are animal species of particular interest for the production of medicinal products, are not naturally susceptible to infection via the oral route. Therefore they are not TSE-relevant animal species within the meaning of this chapter. Also dogs, rabbits and fish are non TSE-relevant animal species within the meaning of this chapter.

- excipients and adjuvants, and
- raw and starting materials and reagents used in production (e.g. bovine serum albumin, enzymes, culture media including those used to prepare working cell banks, or new master cell banks for medicinal products which are subject to a new marketing authorisation).

This chapter is also applicable to materials that come into direct contact with the equipment used in manufacture of the medicinal product or that come in contact with the medicinal product and therefore have the potential for contamination.

Materials used in the qualification of plant and equipment, such as culture media used in media fill experiments to validate the aseptic filling process, shall be considered in compliance with this chapter provided that the constituent or constituents are derived from tissues with no detectable infectivity (category IC tissues), where the risk of cross-contamination with potentially infective tissues has been considered (see section 3-3) and where the materials are sourced from countries with negligible BSE risk or controlled BSE risk (Categories A and B, respectively – see section 3-2). Such information shall be provided in the dossier for a marketing authorisation and verified during routine inspection for compliance with Good Manufacturing Practice (GMP).

Other materials such as cleaning agents, softeners and lubricants that come into contact with the medicinal product during its routine manufacture or in the finishing stage or in the primary packaging are considered in compliance with this chapter if they are tallow derivatives prepared using the rigorous physicochemical processes as described in section 6.

SEED LOTS, CELL BANKS AND ROUTINE FERMENTATION/PRODUCTION[9]

For the purpose of regulatory compliance, master seeds or master cell banks in marketing authorisation applications lodged after 1 July 2000 (for human medicinal products) or 1 October 2000 (for veterinary medicinal products) shall be covered by the note for guidance.

Master seeds and master cell banks,

- for vaccine antigens,
- for a biotechnology-derived medicinal product as described in the Annex to Regulation (EC) No 726/2004 of the European Parliament and of the Council[10], and
- for other medicinal products using seed lots or cell banking systems in their manufacture,

that have already been approved for the manufacture of a constituent of an authorised medicinal product shall be considered in compliance with the note for guidance even if they are incorporated in marketing authorisation applications lodged after 1 July 2000 (for human medicinal products) or 1 October 2000 (for veterinary medicinal products).

Master cell banks and master seeds established before 1 July 2000 (for human medicinal products) or 1 October 2000 (for veterinary medicinal products), but not yet approved as a constituent of an authorised medicinal product shall demonstrate that they fulfil the requirements of the note for guidance. If, for some raw or starting materials or reagents used for the establishment of these cell banks or seeds, full documentary evidence is no longer available, the applicant should present a risk assessment as described in Section 4 of the note for guidance.

Established working seeds or cell banks used in the manufacture of medicinal products authorised before 1 July 2000 (human medicines) or 1 October 2000 (veterinary medicines), which have been subjected to a properly conducted risk assessment by a Competent Authority of the Member States or the European Medicines Agency and declared to be acceptable, shall also be considered compliant.

However, where materials derived from the "TSE-relevant animal species" are used in fermentation/routine production processes or in the establishment of working seeds and working cell banks, the applicant must demonstrate that they fulfil the requirements of the note for guidance.

3. GENERAL CONSIDERATIONS

3-1. *SCIENTIFIC PRINCIPLES FOR MINIMISING RISK*

When manufacturers have a choice, the use of materials from "non TSE-relevant animal species" or non-animal origin is preferred. The rationale for using materials derived from "TSE-relevant animal species" instead of materials from "non-TSE-relevant species" or of non-animal origin should be given. If materials from "TSE-relevant animal species" have to be used, consideration should be given to all the necessary measures to minimise the risk of transmission of TSE.

Readily applicable diagnostic tests for TSE infectivity *in vivo* are not yet available. Diagnosis is based on post-mortem confirmation of characteristic brain lesions by histopathology and/or detection of PrP^{TSE} by Western blot or immunoassay. The demonstration of infectivity by the inoculation of suspect tissue into target species or laboratory animals is also used for confirmation. However, due to the long incubation periods of all TSEs, results of *in vivo* tests are available only after months or years.

Several immunochemical tests have been developed for the detection of PrP^{TSE} in post-mortem samples and some are now considered to be extremely sensitive. However, their ability to detect an infected animal depends on the timing of sample collection in relation to timing of exposure, the type of tissue collected and infectious dose acquired, together with consequential timing of onset of clinical disease. There is currently insufficient information on how this might be affected by strain variations.

Although screening of source animals by *in vitro* tests may prevent the use of animals at late stages of incubation of the disease and may provide information about the epidemiological status of a given country or region, none of the tests are considered suitable to unambiguously confirm the negative status of an animal.

Minimising the risks of transmission of TSE is based upon three complementary parameters:

- the source animals and their geographical origin,
- nature of animal material used in manufacture and any procedures in place to avoid cross-contamination with higher risk materials,
- production process(es) including the quality assurance system in place to ensure product consistency and traceability.

3-2. *ANIMAL SOURCE*

The source materials used for the production of materials for the manufacture of medicinal products shall be derived from animals fit for human consumption following ante- and post-mortem inspection in accordance with EU or equivalent (third country) conditions, except for materials derived from live animals, which should be found healthy after clinical examination.

3-2-1. **Geographical sourcing**

3-2-1-1. *Bovine materials*

The World Organisation for Animal Health (OIE)[11] lays down the criteria for the assessment of the status of countries in the chapter of the International Animal Health Code on bovine spongiform encephalopathy. Countries or regions are classified as follows:

A. countries or regions with a negligible BSE risk;

B. countries or regions with a controlled BSE risk;

(9) See also: Position paper on the assessment of the risk of transmission of animal spongiform encephalopathy agents by master seed materials used in the production of veterinary vaccines (EMEA/CVMP/019/01-February 2001 adopted by the Committee for Medicinal Products for Veterinary Use (CVMP) in July 2001, (OJ C 286, 12.10.2001, p. 12)).
(10) OJ L 136, 30.4.2004, p. 1.
(11) http://www.oie.int/eng/Status/BSE/en_BSE_free.htm

C. countries or regions with an undetermined BSE risk.

As stipulated in Commission Regulation (EC) No 999/2001, as amended[12], the classification of countries or regions thereof according to their BSE risk, based on the rules laid down by OIE, is legally binding in the EU since 1 July 2007. Commission Decision 2007/453/EC[13] as amended, provides the classification of countries or regions according to their BSE risk.

Previously, the European Commission Scientific Steering Committee (SSC)[14] had established a temporary system for classifying the countries according to their geographical BSE risk (GBR)[15].

For the purposes of this chapter the BSE classification based on the OIE rules should be used. If a country, which was previously classified in accordance to the SSC GBR criteria, has not been classified yet according to the OIE rules, the GBR classification can be used until OIE classification has taken place, provided that there is no evidence of significant change in its BSE risk[16].

Where there is a choice, animals should be sourced from countries with the lowest possible BSE risk (negligible BSE risk countries (Category A)) unless the use of material from countries with a higher BSE risk is justified. Some of the materials identified in Section 6, "Specific Conditions" can be sourced from countries with controlled BSE risk (Category B) and, in some cases, from countries with undetermined BSE risk (Category C), provided that the controls and requirements as specified in the relevant sections below are applied. Apart from these exceptions, animals must not be sourced from countries with undetermined BSE risk (Category C), and justifications for the use of animals from countries with undetermined BSE risk (Category C) must always be provided.

3-2-1-2. Sheep and goats (small ruminants)

Naturally occurring clinical scrapie cases have been reported in a number of countries worldwide. As BSE in sheep and goats could possibly be mistaken for scrapie, as a precautionary measure, sourcing of materials derived from small ruminants shall take into account the prevalence of both BSE and scrapie in the country and the tissues from which the materials are derived.

The principles related to "BSE negligible risk (closed) bovine herds" (see section 3-2-2) could equally be applied in the context of small ruminants in order to develop a framework to define the TSE status of a flock of small ruminants. For sheep, because of the concern over the possibility of BSE in sheep, the use of a genotype(s) showing resistance to BSE/scrapie infection could be considered in establishing TSE free flocks[17]. However, the possibility that genotypes resistant to scrapie could be susceptible to BSE (experimental oral exposure) or atypical scrapie (natural cases) should also be taken into account. Goats have not been studied sufficiently with regard to a genotype specific sensitivity.

Material of small ruminant origin should preferably be sourced from countries with a long history of absence of scrapie. Justification shall be required if the material is sourced from some other origin.

3-2-2. **BSE negligible risk (closed) bovine herds**. The safest sourcing is from countries or regions with a negligible risk (Category A countries). Other countries may have or have had cases of BSE at some point in time and the practical concept of "Negligible risk (closed) bovine herds" has been developed by the SSC and endorsed by the CHMP and CVMP. Criteria for establishing and maintaining a "BSE negligible risk (closed) bovine herd" can be found in the SSC opinion of 22-23 July 1999[18].

For the time being it is not possible to quantify the reduction of the geographical BSE risk for cattle from BSE 'negligible risk (closed) bovine herds'. However, it is expected that this risk reduction is substantial. Therefore, sourcing from such closed bovine herds shall be considered in the risk assessment in conjunction with the OIE classification of the country.

3-3. *ANIMAL PARTS, BODY FLUIDS AND SECRETIONS AS STARTING MATERIAL*

In a TSE infected animal, different organs and secretions have different levels of infectivity. If materials from 'TSE-relevant animal species' have to be used, consideration should be given to use materials of the lowest category of risk. The tables given in the Annex of this chapter[19] summarise current data about the distribution of infectivity and PrP^{TSE} in cattle with BSE, and in sheep and goats with scrapie[20].

The information in the tables is based exclusively upon observations of naturally occurring disease or primary experimental infection by the oral route (in cattle) but does not include data on models using strains of TSE that have been adapted to experimental animals, because passaged strain phenotypes can differ significantly and unpredictably from those of naturally occurring disease. Because immunohistochemical and/or Western blot detection of misfolded host protein (PrP^{TSE}) have proven to be a surrogate marker of infectivity, PrP^{TSE} testing results have been presented in parallel with bioassay data. Tissues are grouped

(12) Regulation (EC) No 722/2007 (OJ L 164, 26.6.2007, p. 7)
(13) OJ L 172, 30.6.2007, p. 84
(14) The Scientific Steering Committee established by Commission Decision 97/404/EC (OJ L 169, 27.6.1997, p. 85) shall assist the Commission to obtain the best scientific advice available on matters relating to consumer health. Since May 2003, its tasks have been taken over by the European Food Safety Authority (EFSA): http://www.efsa.europa.eu
(15) The European Scientific Steering Committee classification for geographical BSE risk (GBR) gives an indication of the level of likelihood of the presence of one or more cattle clinically or pre-clinically infected with BSE in a given country or region. A definition of the four categories is provided in the following Table.

GBR level	Presence of one or more cattle clinically or pre-clinically infected with BSE in a geographical region/country
I	Highly unlikely
II	Unlikely but not excluded
III	Likely but not confirmed or confirmed at a lower level
IV	Confirmed at a higher level (≥ 100 cases/1 Million adult cattle per year)

Reports of the GBR assessment of the countries are available on the SSC website (http://ec.europa.eu/food/fs/sc/ssc/outcome_en.html)
(16) Experts consider that the GBR classification system is stable enough, so that it can continue to be used, during the interim period, for the demonstration of compliance with this chapter.
(17) Opinion of the Scientific Panel on Biological Hazards on 'the breeding programme for TSE resistance in sheep': http://www.efsa.europa.eu/EFSA/efsa_locale-1178620753812_1178620775678.htm
(18) SSC Scientific Opinion on the conditions related to "BSE Negligible Risk (Closed) Bovine Herds" adopted at the meeting of 22-23 July 1999. http://ec.europa.eu/food/fs/sc/ssc/out56_en.html
(19) The tissue classification tables are based upon the most recent WHO Guidelines on Tissue Infectivity Distribution in Transmissible Spongiform Encephalopathies (2010) http://www.who.int/bloddproducts/tablestissueinfectivity.pdf
(20) A Scientific opinion on BSE/TSE infectivity in small ruminant tissues is currently being reviewed by EFSA (Question No EFSA-Q-2010-052). For updated information please follow this link: http://registerofquestions.efsa.europa.eu/roqFrontend/questionsListLoader?mandate=M-2010-0041

into three major infectivity categories, irrespective of the stage of disease:

Category IA	**High-infectivity tissues** central nervous system (CNS) tissues that attain a high titre of infectivity in the later stages of all TSEs, and certain tissues that are anatomically associated with the CNS
Category IB	**Lower-infectivity tissues** peripheral tissues that have tested positive for infectivity and/or PrP^{TSE} in at least one form of TSE
Category IC	**Tissues with no detectable infectivity** tissues that have been examined for infectivity, without any infectivity detected, and/or PrP^{TSE}, with negative results

Category IA tissues and substances derived from them shall not be used in the manufacture of medicinal products, unless justified (see Section 5).

Although the category of lower risk tissues (category IB tissues) almost certainly includes some (e.g. blood) with a lower risk than others (e.g. lymphoreticular tissues), the data about infectivity levels in these tissues are too limited to subdivide the category into different levels of risk. It is also evident that the placement of a given tissue in one or another category can be disease and species specific, and subject to revision as new data emerge.

For the risk assessment (see section 4), manufacturers and/or marketing authorisation holders/applicants shall take into account the tissue classification tables in the Annex to this chapter.

The categories in the tables are only indicative and it is important to note the following points.

- In certain situations there could be **cross-contamination** of tissues of different categories of infectivity. The potential risk will be influenced by the circumstances in which tissues were removed, especially by contact of tissues with lower-infectivity tissues or no detectable infectivity (categories IB and IC tissues) with high-infectivity tissues (category IA tissues). Thus, cross-contamination of some tissues may be increased if infected animals are slaughtered by brain stunning (penetrative or non penetrative) or if the brain and/or spinal cord is sawed. The risk of cross-contamination will be decreased if body fluids are collected with minimal damage to tissue and cellular components are removed, and if foetal blood is collected without contamination from other maternal or foetal tissues including placenta, amniotic and allantoic fluids. For certain tissues, it is very difficult or impossible to prevent cross-contamination with category IA tissues (e.g. skull). This has to be considered in the risk assessment.
- For certain classes of substances the **stunning/slaughtering techniques** used may be important in determining the potential risk[21] because of the likelihood of disseminating the brain particles into the peripheral organs, particularly to the lungs. Stunning/slaughtering techniques should be described as well as the procedures to remove high infectivity tissues. The procedures to collect the animal tissues/organs to be used and the measures in place to avoid cross-contamination with a higher risk material must also be described in detail.
- The risk of contamination of tissues and organs with BSE-infectivity potentially harboured in central nervous material as a consequence of the stunning method used for cattle slaughtering depends on the following factors:
  - the amount of BSE-infectivity in the brain of the slaughtered animal,
  - the extent of brain damage,
  - the dissemination of brain particles in the animal body.

  These factors must be considered in conjunction with the OIE/GBR classification of the source animals, the age of the animals in the case of cattle and the *post-mortem* testing of the cattle using a validated method.

  The underlying principles indicated above would be equally applicable to sheep and goats.

The risk posed by cross-contamination will be dependent on several complementary factors including:

- measures adopted to avoid contamination during collection of tissues (see above),
- level of contamination (amount of the contaminating tissue),
- amount and type of materials collected at the same time.

Manufacturers or the marketing authorisation holders/applicants should take into account the risk with respect to cross-contamination.

3-4. *AGE OF ANIMALS*

As the TSE infectivity accumulates in bovine animals over an incubation period of several years, it is prudent to source from young animals.

Presence of infectious material has essentially been reported in the central nervous system and related tissues, as well as in the lymphoreticular system, depending on the TSE agent (BSE in cattle or scrapie in sheep and goat). The exact time course of infectivity in the respective body parts and tissues, from the date of infection, is not known in both species and, as such, it is difficult to give clear guidance on the age above which the various tissues may be infected and should not be collected. The initial recommendation to collect tissues in the youngest age is still valid. In addition, it is noteworthy that the age criteria depend also on the geographical origin. Age is a more important parameter for materials from countries where the risk is higher (Category B and C countries), than from countries with a negligible BSE risk (Category A countries).

3-5. *MANUFACTURING PROCESS*

The assessment of the overall TSE risk reduction of a medicinal product shall take into account the control measures instituted with respect to:

- sourcing of the raw/starting materials, and
- the manufacturing process.

Controlled sourcing is a very important criterion in achieving acceptable safety of the product, due to the documented resistance of TSE agents to most inactivation procedures.

A quality assurance system, such as ISO 9000 certification, HACCP[22] or GMP, must be put in place for monitoring the production process and for batch delineation (i.e. definition of batch, separation of batches, cleaning between batches). Procedures shall be put in place to ensure traceability as well as self-auditing and to auditing suppliers of raw/starting materials.

Certain production procedures may contribute considerably to the reduction of the risk of TSE contamination, e.g. procedures used in the manufacture of tallow derivatives (see section 6). As such rigorous processing cannot be applied to many products, processes involving physical removal, such as precipitation and filtration to remove prion-rich material, are likely to be more appropriate than chemical treatments. A description of the manufacturing process, including in-process controls applied, shall be presented and the steps that might contribute to reduction or elimination of TSE contamination should be discussed. Whenever different manufacturing sites are involved, the steps performed at each site shall be

(21) SSC opinion on stunning methods and BSE risk (The risk of dissemination of brain particles into the blood and carcass when applying certain stunning methods), adopted at the meeting of 10-11 January 2002. http://ec.europa.eu/food/fs/sc/ssc/out245_en.pdf. Report of the EFSA Working group on BSE risk from dissemination of brain particles in blood and carcass. Question No EFSA-Q-2003-122, adopted on 21 October 2004, http://www.efsa.europa.eu/EFSA/efsa_locale-1178620753812_1178620777397.htm

(22) Hazard Analysis Critical Control Point.

clearly identified. The measures in place in order to ensure traceability of every production batch to the source material should be described.

Cleaning process. Cleaning of process equipment may be difficult to validate for the elimination of TSE agents. It is reported that after exposure to high titre preparations of TSE agent, detectable infectivity can remain bound to the surface of stainless steel. The removal of all adsorbed protein by the use of 1 M sodium hydroxide or chlorine releasing disinfectants (e.g. 20 000 ppm chlorine for 1 h) have been considered acceptable approaches where equipment that cannot be replaced has been exposed to potentially contaminated material. Milder treatments with limited concentrations of alkali or stabilized bleach, when properly formulated with detergents and used at specified temperatures, have been shown to exhibit similar efficiency for removing prions as did classical NaOH or chlorine treatments. A system based on vaporised hydrogen peroxide also appeared to be efficient for inactivating TSE agents. These new treatments are more compatible with delicate materials and may be suitable for practical use[23].

If risk materials are used in the manufacture of a product, cleaning procedures, including control measures, shall be put in place in order to minimise the risk of cross-contamination between production batches. This is especially important if materials from different risk categories are handled in the same plant with the same equipment. In the case of using category IA materials in the manufacture of a product, dedicated equipment shall be used, unless otherwise justified.

Further research is needed to develop and validate new decontamination procedures to lower the risk of cross-contamination for material and devices which are not compatible with WHO-recommended procedures.

Removal/Inactivation validation. Validation studies of removal/inactivation procedures for TSEs can be difficult to interpret. It is necessary to take into consideration the nature of the spiked material and its relevance to the natural situation, the design of the study (including scaling-down of processes) and the method of detection of the agent (*in vitro* or *in vivo* assay). Further research is needed to develop an understanding of the most appropriate "spike preparation" for validation studies. Therefore, validation studies are currently not generally required. However, if claims are made for the safety of the product with respect to TSEs based on the ability of manufacturing processes to remove or inactivate TSE agents, they must be substantiated by appropriate investigational studies[24].

In addition to appropriate sourcing, manufacturers are encouraged to continue their investigations into removal and inactivation methods to identify steps/processes that would have benefit in assuring the removal or inactivation of TSE agents. In any event, a production process wherever possible shall be designed taking account of available information on methods which are thought to inactivate or remove TSE agents.

For certain types of products (see section 6-3 Bovine blood and blood derivatives), where validated removal/inactivation is not readily applicable, process evaluation might be required. This should be based on the starting material and any published data on TSE risk.

4. RISK ASSESSMENT OF MATERIALS OR SUBSTANCES USED IN THE MANUFACTURE AND PREPARATION OF A MEDICINAL PRODUCT IN THE CONTEXT OF REGULATORY COMPLIANCE

The assessment of the risk associated with TSE needs careful consideration of all of the parameters as outlined in section 3-1 (Scientific Principles for Minimising Risk).

As indicated in the introduction to this chapter, regulatory compliance is based on a favourable outcome from a risk assessment. The risk assessments, conducted by the manufacturers and/or the marketing authorisation holders or applicants for the different materials or substances from "TSE-relevant animal species" used in the manufacture of a medicinal product shall show that all TSE risk factors have been taken into account and, where possible, risk has been minimised by application of the principles described in this chapter. TSE Certificates of suitability issued by the EDQM may be used by the marketing authorisation holders or applicants as the basis of the risk assessments.

An overall risk assessment for the medicinal product, conducted by the marketing authorisation holders or applicants, shall take into account the risk assessments for all the different materials from "TSE-relevant animal species" and, where appropriate, TSE reduction or inactivation by the manufacturing steps of the active substance and/or finished product.

The final determination of regulatory compliance rests with the competent authority.

It is incumbent upon the manufacturers and/or the marketing authorisation holders or applicants for both human and veterinary medicinal products to select and justify the control measures for a given "TSE-relevant animal species" derivative, taking into account the latest scientific and technical progress.

5. BENEFIT/RISK EVALUATION

In addition to the parameters as mentioned in sections 3 (that may be covered by a TSE Certificate of Suitability issued by the EDQM) and 4, the acceptability of a particular medicinal product containing materials derived from a "TSE-relevant animal species", or which as a result of manufacture could contain these materials, shall take into account the following factors:

- route of administration of the medicinal product,
- quantity of animal material used in the medicinal product,
- maximum therapeutic dosage (daily dose and duration of treatment),
- intended use of the medicinal product and its clinical benefit,
- presence of a species barrier.

High-infectivity tissues (category IA tissues) and substances derived thereof shall not be used in manufacture of medicinal products, their starting materials and intermediate products (including active substances, excipients and reagents), unless justified. A justification why no other materials can be used shall be provided. In these exceptional and justified circumstances, the use of high-infectivity tissues could be envisaged for the manufacture of active substances, when, after performing the risk assessment as described in Section 4 of this chapter, and taking into account the intended clinical use, a positive benefit/risk assessment can be presented by the marketing authorisation applicant. Substances from category IA materials, if their use is justified, must be produced from animals of countries with negligible BSE risk (Category A).

6. SPECIFIC CONSIDERATIONS

The following materials prepared from "TSE-relevant animal species" are considered in compliance with this chapter provided that they meet at least the conditions specified below. The relevant information or a certificate of suitability granted by the EDQM shall be provided by the marketing authorisation applicant/holder.

(23) WHO Guidelines on Tissue Infectivity Distribution in Transmissible Spongiform Encephalopathies (2006) http://www.who.int/bloodproducts/tse/WHO%20TSE%20Guidelines%20FINAL-22%20JuneupdatedNL.pdf
(24) Guideline on the investigation of manufacturing process for plasma-derived medicinal products with regard to vCJD risk CPMP/BWP/5136/03

6-1. *COLLAGEN*

Collagen is a fibrous protein component of mammalian connective tissue.

For collagen, documentation to demonstrate compliance with this chapter needs to be provided taking into account the provisions listed in sections 3 to 5. In addition, consideration should be given to the following.

- For collagen produced from bones, the conditions specified for gelatin are applicable (see below). Lower inactivation capacity is expected from the collagen manufacturing process than from that of gelatin. Therefore, sourcing becomes a more critical aspect to consider.
- Collagen produced from tissues such as hides, skins, tendons and sinews do not usually present a measurable TSE risk provided that contamination with potentially infected materials, for example spillage of blood and/or central nervous tissues, is avoided during procurement. Therefore, hides represent a safer raw material for human implants derived from collagen. However, cross-contamination with brain material released during the slaughtering process that may have dried on the surface of hides would be difficult to eliminate. This is another aspect to consider in the evaluation of safety of this source material.

The collagen manufacturing process can have some steps in common with the manufacture of gelatin such as alkaline and sodium sulphate treatment, calcium hydroxide and sodium hydroxide treatments or enzyme treatment. However, even these common steps can differ in duration and pH condition which can result in significant differences in their inactivation capacity. Manufacturers should at least conduct a process evaluation based on the similarities of the collagen processing steps, as compared to known inactivation steps in the manufacture of gelatin, in order to support the safety of the product. In addition to processing, differences also exist in the final use of the material and, consequently, in their risk assessment, while gelatin is widely used for oral administration, many collagen applications are in the form of surgical implants. This aspect should also be considered in the final risk assessment.

6-2. *GELATIN*

Gelatin is a natural, soluble protein, gelling or non-gelling, obtained by the partial hydrolysis of collagen produced from bones, hides and skins of animals.

For gelatin, documentation to demonstrate compliance with this chapter needs to be provided taking into account the provisions listed in sections 3 to 5. In addition, consideration should be given to the following[25].

The source material used

Gelatin used in medicinal products can be manufactured from bones or hides.

Hides as the starting material. On the basis of current knowledge, hides used for gelatin production represent a safer source material as compared to bones. However, it is highly recommended that measures should be put in place to avoid cross-contamination with potentially infected materials during procurement.

Bones as the starting material. Where bones are used to manufacture gelatin, the quality of the starting materials needs to be controlled as an additional parameter to ensure the safety of the final product. Therefore, the following should be applied.

1. Skulls and spinal cord shall be removed from the collected bones (raw/starting material) independent of the age or the country of origin of the cattle.

2. Vertebrae shall be removed from the raw/starting materials from cattle over 30 months from countries with a controlled or an undetermined BSE risk (Categories B or C).

3. Gelatin for parenteral use should only be manufactured from bones coming from countries with a negligible or a controlled BSE risk (Category A and B, respectively). Gelatin for oral use can be manufactured from bones from countries with a negligible, a controlled or an undetermined BSE risk (Category A, B and C, respectively).

4. Gelatin shall be manufactured using one of the manufacturing methods described below.

Manufacturing methods

Hides. No specific measures with regard to the processing conditions are required for gelatin produced from hides provided that control measures are put in place to avoid cross-contamination both during the procurement of the hides and during the manufacturing process.

Bones. Where bones are used as the starting material, the mode of manufacture will be the second parameter that will ensure the safety of gelatin.

- Gelatin can be manufactured from bones from countries with a negligible, a controlled or an undetermined BSE risk (Categories A, B or C) sourced in accordance with the conditions described in section 6-2 under The source material used, using the acid, alkaline or heat/pressure manufacturing process.
- The manufacturing process shall be taken into consideration when performing the risk assessment as described in Section 4 of this chapter. Both the acid and the alkaline manufacturing methods have shown similar overall inactivation/removal of TSE infectivity in the gelatin validation experiments. Studies have shown that an additional alkaline treatment (pH 13, 2 h) of the bones/ossein further increases the TSE inactivation/removal capacity of the manufacturing process. Other processing steps such as filtration, ion-exchange chromatography and UHT sterilisation also contributes to the safety of gelatin.
- For a typical alkaline manufacturing process, bones are finely crushed, degreased with hot water and demineralised with dilute hydrochloric acid (at a minimum of 4 per cent and pH < 1.5) over a period of at least 2 days to produce the ossein. This is followed by an alkaline treatment with saturated lime solution (pH at least 12.5) for a period of at least 20 days.
- Bovine bones may also be treated by an acid process. The liming step is then replaced by an acid pre-treatment where the ossein is treated at pH < 3.5 for a minimum of 10 hours.
- A “flash” heat treatment (sterilisation) step at 138 °C minimum for 4 s at least is applied to both acid and alkaline manufacturing process.
- In the heat/pressure process, the dried degreased crushed bones are autoclaved with saturated steam at a pressure greater than 3 bar and a minimum temperature of 133 °C, for at least 20 min, followed by extraction of the protein with hot water.

The finishing steps are similar for the alkaline, acid and heat/pressure process and include extraction of the gelatine, washing, filtration and concentration.

6-3. *BOVINE BLOOD AND BLOOD DERIVATIVES*

Foetal bovine serum is commonly used in cell cultures. Foetal bovine serum should be obtained from foetuses harvested in abattoirs from healthy dams fit for human consumption and

(25) Based on the Opinion of the Scientific Panel on Biological Hazards of the European Food Safety Authority on the ‘Quantitative assessment of the human BSE risk posed by gelatine with respect to residual BSE risk’. The EFSA Journal, 312, (1-28). http://www.efsa.europa.eu/EFSA/efsa_locale-1178620753812_1178620776107.htm
The requirements for source material selection and manufacture are appropriate for oral or parenteral gelatin for use in human and veterinary medicinal products.

the womb should be completely removed and the foetal blood harvested in dedicated space or area by cardiac puncture into a closed collection system using aseptic technique.

Newborn calf serum is obtained from calves under 20 days old and calf serum from animals under the age of 12 months. In the case of donor bovine serum, given that it may be derived from animals less than 36 months old, the TSE negative status of the donor herd shall be well defined and documented. In all cases, serum shall be collected according to specified protocols by personnel trained in these procedures to avoid cross-contamination with higher risk tissues.

For bovine blood and blood derivatives, documentation to demonstrate compliance with this chapter needs to be provided taking into account the provisions listed in sections 3 to 5. In addition, consideration should be given to the following.

Traceability

Traceability to the slaughterhouse must be assured for each batch of serum or plasma. Slaughterhouses must have available lists of farms from which the animals are originated. If serum is produced from living animals, records must be available for each serum batch which assures the traceability to the farms.

Geographical origin

Whilst tissue infectivity of BSE in cattle is more restricted than scrapie, as a precautionary measure bovine blood should be sourced from Category A countries. Bovine blood from Category B countries is also acceptable provided that there is no risk for cross-contamination of blood with brain material from the slaughter of animals over 21 months[26] of age.

Stunning methods

If it is sampled from slaughtered animals, the method of slaughter is of importance to assure the safety of the material. It has been demonstrated that stunning by captive bolt stunner with or without pithing as well as by pneumatic stunner, especially if it injects air, can destroy the brain and disseminate brain material into the blood stream. Non-penetrative stunning is no more considered as an alternative to penetrative stunning because contamination of blood with brain material has been demonstrated[27]. Negligible risk can be expected from electro-narcosis[28], but this even does not provide strict safety because, when unsuccessful, animals may have to be additionally stunned. The stunning methods must therefore be described for the bovine blood collection process.

Whenever a risk of cross-contamination of blood with brain cannot be avoided at routine slaughtering in countries with a controlled BSE risk (Category B), safety measures such as restriction of the age of the cattle and/or reduction of infectious agents during manufacture have to be applied.

Age

For countries with a controlled BSE risk (Category B), a precautionary age limit of 21 months shall apply for bovine blood or blood derivatives where no significant reduction of TSE agents can be assumed from manufacture. An age limit of 30 months is considered sufficient for blood derivatives where significant reduction of TSE agents can be demonstrated as described below.

Reduction of TSE agents during manufacture

For blood derivatives, the capacity of the manufacturing process to reduce/eliminate TSE agents should be estimated from investigational studies. The estimation may be based on published data or in house data whenever it can be shown that such data is relevant to the specific manufacturing process. If it cannot be concluded that the reduction capacity is comparable, it is recommended that manufacturers undertake product-specific investigational studies. Investigations using biochemical assay may be sufficient if there is scientific evidence that this assay correlates with infectivity data. General guidance for investigational studies on reduction of TSE agents has been outlined[29]. Brain-derived spike preparations are appropriate for studies investigating the risk from brain-contaminated blood.

6-4. *TALLOW DERIVATIVES*

Tallow is fat obtained from tissues including subcutaneous, abdominal and inter-muscular areas and bones. Tallow used as the starting material for the manufacture of tallow derivatives shall be 'Category 3 material or equivalent', as defined in Regulation (EC) No 1774/2002 of the European Parliament and of the Council of 3 October 2002 laying down health rules concerning animal by-products not intended for human consumption.

Tallow derivatives, such as glycerol and fatty acids, manufactured from tallow by rigorous processes are thought unlikely to be infectious and they have been the subject of specific consideration by CHMP and CVMP. For this reason, such materials manufactured under the conditions at least as rigorous as those given below shall be considered in

Table 5.2.8.-1. – *Concept for acceptance of bovine blood/sera and derivatives*

Product	Foetal bovine serum	Donor calf serum	Adult bovine donor serum	Calf serum	Adult bovine serum / plasma	Adult bovine serum / plasma / serum derivative	Adult bovine serum derivative	Adult bovine serum derivative
Geographical origin of cattle	Cat. A and B	Cat. A and B	Cat. A and B[1]	Cat. A and B	Cat. A	Cat. B	Cat. A	Cat. B
Age of cattle	unborn	< 1 year	< 36 months	< 1 year	No limit	< 21 months[2]	No limit	< 30 months
Slaughtering/cross-contamination of blood with CNS material	No risk of cross-contamination			Risk of cross-contamination				
Demonstration of Prion reduction during manufacture	No			No				Yes[3]

1. When sourced in Category B countries, cattle should be from well-defined and documented herds.

2. A higher age may be allowed if cross-contamination of blood with CNS material can be clearly ruled out (e.g. halal slaughter).

3. Demonstration of prion reduction may not be required if cross-contamination of blood with CNS material can be clearly ruled out (e.g. halal slaughter).

(26) Opinion of the Scientific Panel on Biological Hazards on the assessment of the age limit in cattle for the removal of certain Specified Risk Materials (SRM). Question No EFSA-Q-2004-146, adopted on 28 April 2005
(27) The tissue classification tables are based upon the most recent WHO Guidelines on Tissue Infectivity Distribution in Transmissible Spongiform Encephalopathies (2010) http://www.who.int/bloodproducts/tablestissueinfectivity.pdf
(28) Report of the EFSA Working Group on BSE risk from dissemination of brain particles in blood and carcass. Question No EFSA-Q-2003-112, adopted on 21 October 2004, http://www.efsa.europa.eu/en/sciencebiohaz/biohaz_opinions/opinion_annexes/733.html
(29) Guideline on the investigation of manufacturing process for plasma-derived medicinal products with regard to vCJD risk CPMP/BWP/5136/03.

compliance for this chapter, irrespective of the geographical origin and the nature of the tissues from which tallow derivatives are derived. Examples of rigorous processes are:

- trans-esterification or hydrolysis at not less than 200 °C for not less than 20 min under pressure (glycerol, fatty acids and fatty acid esters production),
- saponification with 12 M NaOH (glycerol and soap production):
  - batch process: at not less than 95 °C for not less than 3 h,
  - continuous process: at not less than 140 °C, under pressure for not less than 8 min, or equivalent,
- distillation at 200 °C.

Tallow derivatives manufactured according to these conditions are unlikely to present any TSE risk and shall therefore be considered compliant with this chapter.

Tallow derivatives produced using other conditions must demonstrate compliance with this chapter.

6-5. *ANIMAL CHARCOAL*

Animal charcoal is prepared by carbonisation of animal tissues, such as bones, using temperatures higher than 800 °C. Unless otherwise justified, the starting material for the manufacture of animal charcoal shall be Category 3 material or equivalent, as defined in Regulation (EC) No 1774/2002 of the European Parliament and of the Council of 3 October 2002 laying down health rules concerning animal by-products not intended for human consumption. Irrespective of the geographical origin and the nature of the tissue, for the purpose of regulatory compliance, animal charcoal shall be considered in compliance with this chapter.

Charcoal manufactured according to these conditions is unlikely to present any TSE risk and shall therefore be considered compliant with this chapter. Charcoal produced using other conditions must demonstrate compliance with this chapter.

6-6. *MILK AND MILK DERIVATIVES*

In the light of the current scientific knowledge and irrespective of the geographical origin, bovine milk is unlikely to present any risk of TSE contamination[30].

Certain materials, including lactose, are extracted from whey, the spent liquid from cheese production following coagulation. Coagulation can involve the use of calf rennet, an extract from abomasum, or rennet derived from other ruminants. The CHMP/CVMP have performed a risk assessment for lactose and other whey derivatives produced using calf rennet and concluded that the TSE risk is negligible if the calf rennet is produced in accordance with the process described in the risk assessment report[31]. The conclusion was endorsed by the SSC[32] which has also performed an assessment of the TSE risk of rennet in general[33].

Bovine milk derivatives manufactured according to the conditions described below are unlikely to present any TSE risk and shall therefore be considered compliant with this chapter.

- The milk is sourced from healthy animals in the same conditions as milk collected for human consumption, and
- no other ruminant materials, with the exception of calf rennet, are used in the preparation of such derivatives (e.g. pancreatic enzyme digests of casein).

Milk derivatives produced using other processes or rennet derived from other ruminant species must demonstrate compliance with this chapter.

6-7. *WOOL DERIVATIVES*

Derivatives of wool and hair of ruminants, such as lanolin and wool alcohols derived from hair shall be considered in compliance with this chapter, provided the wool and hair are sourced from live animals.

Wool derivatives produced from wool which is sourced from slaughtered animals declared "fit for human consumption" and the manufacturing process in relation to pH, temperature and duration of treatment meets at least one of the stipulated processing conditions listed below are unlikely to present any TSE risk and shall therefore be considered compliant with this chapter.

- Treatment at pH ≥ 13 (initial; corresponding to a NaOH concentration of at least 0.1 M NaOH) at 60 °C for at least 1 h. This occurs normally during the reflux stage of the organic-alkaline treatment.
- Molecular distillation at ≥ 220 °C under reduced pressure.

Wool derivatives produced using other conditions must demonstrate compliance with this chapter.

6-8. *AMINO ACIDS*

Amino acids can be obtained by hydrolysis of materials from various sources.

Unless otherwise justified, the starting material for the manufacture of amino acids shall be 'Category 3 material or equivalent', as defined in Regulation (EC) No 1774/2002 of the European Parliament and of the Council of 3 October 2002 laying down health rules concerning animal by-products not intended for human consumption.

Amino acids prepared using the following processing conditions are unlikely to present any TSE risk and shall be considered compliant with this chapter:

- amino acids produced from hides and skins by a process which involves exposure of the material to a pH of 1 to 2, followed by a pH of > 11, followed by heat treatment at 140 °C for 30 min at 3 bar,
- the resulting amino acids or peptides must be filtered after production, and
- analysis is performed using a validated and sensitive method to control any residual intact macromolecules, with an appropriate limit set.

Amino acids prepared using other conditions must demonstrate compliance with this chapter.

6-9 PEPTONES

Peptones are partial hydrolysates of protein, achieved by enzymic or acid digestion. They are used in microbiological culture media to support the nutritional requirements of micro-organisms, which might be used as seed stocks or in industrial scale fermentations for the production of human and veterinary medicinal products, including vaccines. There is considerable interest in the use of vegetable protein as an alternative to animal sourced protein. However:

- where gelatin is used as the protein source material, reference is made to section 6-2 Gelatin, of this chapter,
- where casein is used as the protein source material, reference is made to section 6-6 Milk and milk derivatives, of this chapter,
- where tissue of TSE-relevant animal species is the protein source material, the tissue must be sourced from animals fit for consumption (see section 3-2 Source animals, of this chapter) with a maximum age of 30 months old for cattle

(30) For milk and milk derivatives from small ruminants, please see EFSA opinion on Question No EFSA-Q-2008-310, adopted on 22 October 2008, http://www.efsa.europa.eu/en/scdocs/scdoc/849.htm

(31) Committee for Medicinal Products for Human Use and its Biologics Working Party conducted a risk and regulatory assessment of lactose prepared using calf rennet. The risk assessment included the source of the animals, the excision of the abomasums and the availability of well-defined quality assurance procedures. The quality of any milk replacers used as feed for the animals from which abomasums are obtained is particularly important. The report can be found on http://www.ema.europa.eu/pdfs/human/press/pus/057102.pdf

(32) Provisional statement on the safety of calf-derived rennet for the manufacture of lactose, adopted by the SSC at its meeting of 4-5 April 2002 (http://ec.europa.eu/food/fs/sc/ssc/out255_en.pdf)

(33) The SSC issued an opinion on the safety of animal rennet in regard to risks from animal TSE and BSE in particular, adopted at its meeting of 16 May 2002 (http://ec.europa.eu/food/fs/sc/ssc/out265_en.pdf)

from countries with a controlled BSE risk (Category B). The age of animals is of minimal concern for animals from countries with a negligible BSE risk (Category A).

Annex: major categories of infectivity

The tables below are taken from the *WHO Guidelines on Tissue Infectivity Distribution in Transmissible Spongiform Encephalopathies (2010).*

Data entries are shown as follows:

+	=	Presence of infectivity or PrP^{TSE}
−	=	Absence of detectable infectivity or PrP^{TSE}
NT	=	Not tested
NA	=	Not applicable
?	=	Uncertain interpretation
()	=	Limited or preliminary data
[]	=	Infectivity or PrP^{TSE} data based exclusively on bioassays in transgenic (Tg) mice over-expressing the PrP-encoding gene or PRP^{TSE} amplification methods

Category IA: High-infectivity tissues

Tissue	Cattle BSE		Sheep and goats Scrapie		Elk and deer CWD	
	Infectivity[1]	PrP^{TSE}	Infectivity[1]	PrP^{TSE}	Infectivity[1]	PrP^{TSE}
Brain	+	+	+	+	+	+
Spinal cord	+	+	+	+	NT	+
Retina	+	NT	NT	+	NT	+
Optic nerve[2]	+	NT	NT	+	NT	+
Spinal ganglia	+	+	+	+	NT	+
Trigeminal ganglia	+	+	NT	+	NT	-
Pituitary gland[3]	−	NT	+	+	NT	+
Dura mater[3]	NT	NT	NT	NT	NT	NT

Category IB: Lower-infectivity tissues

Tissue	Cattle BSE		Sheep and goats Scrapie		Elk and deer CWD	
	Infectivity[1]	PrP^{TSE}	Infectivity[1]	PrP^{TSE}	Infectivity[1]	PrP^{TSE}
Peripheral nervous system						
Peripheral nerves	[+]	+	+	+	NT	+
Autonomic ganglia[4]	NT	+	NT	+	NT	+
Lymphoreticular tissues						
Spleen	−	−	+	+	NT	+
Lymph nodes	−	−	+	+	NT	+
Tonsil	+	−	+	+	NT	+
Nictitating membrane	+	−	[+]	+	NT	+
Thymus	−	NT	+	+	NT	−
Alimentary tract[5]						
Oesophagus	−	NT	[+]	+	NT	+
Fore-stomach[6] (ruminants only)	−	NT	[+]	+	NT	+
Stomach/abomasum	−	NT	[+]	+	NT	+
Duodenum	−	−	[+]	+	NT	+
Jejunum[7]	−	+	[+]	+	NT	NT
Ileum[7]	+	+	+	+	NT	+
Appendix	NA	NA	NA	NA	NA	NA
Colon/caecum[7]	−	−	+	+	NT	+
Rectum	NT	NT	NT	+	NT	+
Reproductive tissues						
Placenta[8]	−	NT	+	+	NT	−
Ovary[3]	−	NT	−	−	NT	−
Uterus[3]	−	NT	−	−	NT	−

Tissue	Cattle BSE		Sheep and goats Scrapie		Elk and deer CWD	
	Infectivity[1]	PrP^{TSE}	Infectivity[1]	PrP^{TSE}	Infectivity[1]	PrP^{TSE}
Other tissues						
Mammary gland/udder[9]	−	NT	−	+	NT	NT
Skin[3, 10]	−	NT	−	+	[+]	[+]
Adipose tissue	−	NT	NT	NT	[+]	NT
Heart/pericardium	−	NT	−	NT	NT	+
Lung	−	NT	−	−	NT	+
Liver[3]	−	NT	+	−	NT	−
Kidney[3, 11]	−	−	[+]	+	NT	+
Adrenal	[+]	+	+	−	NT	+
Pancreas[3]	−	NT	+	NT	NT	+
Bone marrow[12]	[+]	NT	+	NT	NT	−
Skeletal muscle[13]	[+]	NT	[+]	+	[+]	−
Tongue[14]	−	NT	[+]	+	NT	−
Blood vessels	−	NT	NT	+	NT	−
Nasal mucosa[15]	−	NT	+	+	NT	+
Salivary gland	−	NT	+	NT	−	−
Cornea[16]	NT	NT	NT	NT	NT	NT
Body fluids, secretion and excretions						
CSF	−	NT	+	−	NT	NT
Blood[17]	−	?	+	?	+	?
Saliva	NT	NT	−	NT	+	[−]
Milk[18]	−	−	+	[+]	NT	NT
Urine[19]	−	NT	−	−	−[+]	[+]
Feces[19]	−	NT	−	NT	−[+]	NT

Category IC: Tissues with no detectable infectivity

Tissue	Cattle BSE		Sheep and goats Scrapie		Elk and deer CWD	
	Infectivity[1]	PrP^{TSE}	Infectivity[1]	PrP^{TSE}	Infectivity[1]	PrP^{TSE}
Reproductive tissues						
Testis	−	NT	−	−	NT	−
Prostate/Epididymis/Seminal vesicle	−	NT	−	−	NT	−
Semen	−	NT	−	−	NT	NT
Placenta fluids	−	NT	NT	NT	NT	NT
Foetus[20]	−	NT	−	−	NT	(−)
Embryos[20]	−	NT	?	NT	NT	NT
Musculo-skeletal tissues						
Bone	−	NT	NT	NT	NT	NT
Tendon	−	NT	NT	NT	NT	NT
Other tissues						
Gingival tissues	NT	NT	NT	NT	NT	NT
Dental pulp	NT	NT	NT	NT	NT	NT
Trachea	−	NT	NT	NT	NT	−
Thyroid gland	NT	NT	−	NT	NT	−
Body fluids, secretions and excretions						
Colostrum[21]	(−)	−	(?)	NT	NT	NT

Cord blood[21]	–	NT	NT	NT	NT	NT
Sweat	NT	NT	NT	NT	NT	NT
Tears	NT	NT	NT	NT	NT	NT
Nasal mucus	NT	NT	NT	NT	NT	NT
Bile	NT	NT	NT	NT	NT	NT

1. Infectivity bioassays of human tissues have been conducted in either primates or mice (or both), bioassays of cattle tissues have been conducted in either cattle or mice (or both), and most bioassays of sheep and/or goat tissues have been conducted only in mice. In regard to sheep and goats not all results are consistent for both species, for example, two goats (but no sheep) have contracted BSE naturally [Eurosurveillance, 2005, Jeffrey et al., 2006]. Similarly, most of the results described for CWD were derived from studies in deer, and findings may not be identical in elk or other cervids.

2. In experimental models of TSE, the optic nerve has been shown to be a route of neuroinvasion, and contains high titres of infectivity.

3. No experimental data about infectivity in pituitary gland or dura mater in humans with all forms of human TSE have been reported, but cadaveric dura mater patches, and growth hormone derived from cadaveric pituitaries have transmitted disease to hundreds of people and therefore must be included in the category of high-risk tissues. PrP^{TSE} was detected by immunoblot in the dura mater of a vCJD patient who died in the US after an unusually long incubation period (see also Table IB for other positive tissues: skin, kidney, liver, pancreas, ovary and uterus) [Notari et al., 2010]. It must be mentioned that earlier studies of numerous cases examined in the UK reported all of these tissues to be negative [Ironside et al., 2002, Head et al., 2004].

4. In cattle, PrP^{TSE} is reported to be inconsistently present in the enteric plexus in the distal ileum, but immunohistochemical examination of tissues from a single 'fallen stock' case of BSE in Japan suggested (albeit equivocally) involvement of myenteric plexuses throughout the small and large intestine [Kimura and Haritani, 2008].

5. In vCJD, PrP^{TSE} is limited to gut-associated lymphoid and nervous tissue (mucosa, muscle, and serosa are negative).

6. Ruminant fore stomachs (reticulum, rumen, and omasum) are widely consumed, as is the true stomach (abomasum). The abomasum of cattle (and sometimes sheep) is also a source of rennet.

7. When a large BSE oral dose was used to infect cattle experimentally, infectivity was detected in the jejunum and the ileo-caecum junction in Tg mice overexpressing PrP [courtesy of Dr M Groschup]. PrP^{TSE} was detected at low incidence in lymphoid tissue of ileum [Terry et al., 2003] and has been detected at an even lower frequency in jejunal lymphoid tissue of cattle similarly infected by the oral route [EFSA, 2009].

8. A single report of transmission of sporadic CJD infectivity from human placenta has never been confirmed and is considered improbable.

9. PrP^{TSE} has been detected in scrapie-infected sheep with chronic mastitis, but not from infected sheep without mastitis [Ligios et al., 2005].

10. Studies in hamsters orally infected with scrapie revealed that PrP^{TSE} deposition in skin was primarily located within small nerve fibres. Also, apical skin 'velvet' from the antlers of CWD-infected deer is reported to contain PrP^{TSE} and infectivity [Angers et al., 2009].

11. PrP^{TSE} detected by immunocytochemistry in the renal pelvis of scrapie-infected sheep [Siso et al., 2006], and in lymphoid follicles within connective tissue adjacent to the renal pelvis in CWD-infected mule deer [Fox et al., 2006].

12. A single positive marrow in multiple transmission attempts from cattle orally dosed with BSE-infected brain [Wells et al., 1999, Wells et al., 2005, Sohn et al., 2009].

13. Muscle homogenates have not transmitted disease to primates from humans with sporadic CJD, or to cattle from cattle with BSE. However, intra-cerebral inoculation of a semitendinosus muscle homogenate (including nervous and lymphatic elements) from a single cow with clinical BSE has transmitted disease to transgenic mice that overexpress PrP at a rate indicative of trace levels of infectivity [Buschmann and Groschup, 2005]. Also, recent published and unpublished studies have reported the presence of PrP^{TSE} in skeletal muscle in experimental rodent models of scrapie and vCJD [Beekes et al., 2005], in experimental and natural scrapie infections of sheep and goats [Andreoletti et al., 2004], in sheep orally dosed with BSE [Andreoletti, unpublished data], and in humans with sporadic, iatrogenic, and variant forms of CJD [Glatzel et al., 2003, Kovacs et al., 2004, Peden et al., 2006]. Bioassays of muscle in transgenic mice expressing cervid PrP have documented infectivity in CWD-infected mule deer [Angers et al., 2006], and experiments are underway to determine whether detectable PrP^{TSE} in other forms of TSE is also associated with infectivity.

14. In cattle, bioassay of infectivity in the tongue was negative, but the presence of infectivity in palatine tonsil has raised concern about possible infectivity in lingual tonsillar tissue at the base of the tongue that may not be removed at slaughter [Wells et al., 2005, EFSA, 2008]. In sheep naturally infected with scrapie, 7 of 10 animals had detectable PrP^{TSE} in the tongue [Casalone et al., 2005, Corona et al., 2006].

15. Limited chiefly to regions involved in olfactory sensory reception.

16. Because only one case of iatrogenic CJD has been certainly attributed to a corneal transplant among hundreds of thousands of recipients (one additional case is considered probable, and another case only possible), cornea has been categorized as a lower-risk tissue, other anterior chamber tissues (lens, aqueous humour, iris, conjunctiva) have been tested with a negative result both in vCJD and other human TSEs, and there is no epidemiological evidence that they have been associated with iatrogenic disease transmission.

17. A wealth of data from studies of blood infectivity in experimental rodent models of TSE have been extended by recent studies documenting infectivity in the blood of sheep with naturally occurring scrapie and in sheep transfused with blood from BSE-infected cattle [Houston et al., 2008], of deer with naturally occurring CWD [Mathiason et al., 2006], and (from epidemiological observations) in the red cell fraction (which includes significant amounts of both plasma and leukocytes) of four blood donors in the pre-clinical phase of vCJD infections [reviewed in Brown, 2006, Hewitt et al., 2006]. Plasma Factor VIII administration has also been potentially implicated in a subclinical case of vCJD in a haemophilia patient [Peden et al., 2010]. Blood has not been shown to transmit disease from humans with any form of 'classical' TSE [Dorsey et al., 2009], or from cattle with BSE (including fetal calf blood). A number of laboratories using new, highly sensitive methods to detect PrP^{TSE} are reporting success in a variety of animal and human TSEs. However, several have experienced difficulty obtaining reproducible results in plasma, and it is not yet clear that positive results imply a potential for disease transmissibility, either because of false positives, or of 'true' positives that are due to sub-transmissible concentrations of PrP^{TSE}. Because of these considerations (and the fact that no data are yet available on blinded testing of specimens from naturally infected humans or animals) the expert group felt that it was still too early to evaluate the validity of these tests with sufficient confidence to permit either a negative or positive conclusion.

18. Evidence that infectivity is not present in milk from BSE-infected bovines includes temporo-spatial epidemiologic observations failing to detect maternal transmission to calves suckled for long periods, clinical observations of over a hundred calves suckled by infected cows that have not developed BSE, and experimental observations that milk from infected cows reared to an age exceeding the minimum incubation period has not transmitted disease when administered intra-cerebrally or orally to mice [Middleton and Barlow, 1993, Taylor et al., 1995]. Also, PrP^{TSE} has not been detected in milk from cattle incubating BSE following experimental oral challenge [SEAC, 2005]. However, low levels (µg to ng/L) of normal PrP have been detected in milk from both animals and humans [Franscini et al., 2006]. PrP^{TSE} has been detected in the mammary glands of scrapie-infected sheep with chronic mastitis [Ligios et al., 2005], and very recently it has been reported that milk (which in some cases also contained colostrum) from scrapie-infected sheep transmitted disease to healthy animals [Konold et al., 2008, Lacroux et al., 2008].

19. A mixed inoculum of urine and faeces from naturally infected CWD deer did not transmit disease during an 18-month observation period after inoculation of healthy deer with a heterozygous (96 G/S) PRNP genotype [Mathiason et al., 2006]. However, recent bioassays in Tg mice have transmitted disease from both urine [Haley et al., 2009] and faeces [Tamgüney et al., 2009]. In addition, mice with lymphocytic nephritis that were experimentally infected with scrapie shed both PrP^{TSE} and infectivity in urine, when bioassayed in Tg mice [Seegeret al., 2005]. Very low levels of infectivity have also been detected in the urine (and histologically normal kidneys) of hamsters experimentally infected with scrapie [Gregori and Rohwer, 2007, Gonzalez-Romero et al., 2008]. Finally, in an experimental scrapie-hamster model, oral dosing resulted in infectious faeces when bioassayed in Tg mice over-expressing PrP [Safar et al., 2008].

20. Embryos from BSE-affected cattle have not transmitted disease to mice, but no infectivity measurements have been made on fetal calf tissues other than blood (negative mouse bioassay) [Fraser and Foster, 1994]. Calves born of dams that received embryos from BSE- affected cattle have survived for observations periods of up to seven years, and examination of the brains of both the unaffected dams and their offspring revealed no spongiform encephalopathy or PrP^{TSE} [Wrathall et al., 2002].

21. Early reports of transmission of sporadic CJD infectivity from human cord blood and colostrum have never been confirmed and are considered improbable. A bioassay from a cow with BSE in transgenic mice over-expressing bovine PrP gave a negative result [Buschmann and Groschup, 2005], and PrP^{TSE} has not been detected in colostrum from cattle incubating BSE following experimental oral challenge [SEAC, 2005].

04/2013:50209

5.2.9. EVALUATION OF SAFETY OF EACH BATCH OF IMMUNOSERA FOR VETERINARY USE

Definition of abnormal reactions. During development studies, the type and degree of reactions expected after administration of the immunoserum are defined in the light of safety testing. This definition of normal or abnormal local and systemic reactions is then used as part of the operation procedure for the batch safety test to evaluate acceptable and unacceptable reactions.

Amount to be administered in the test. In the tests, 'dose' means the quantity of the immunoserum to be recommended for use and containing the titre or potency within the limits specified for production batches. The amount to be administered in the test is usually defined in a number of doses.

Route of administration. The immunoserum is administered by a recommended route. In principle, preference should be given to the application route with the higher possibility to detect reactions.

Target animal species and category of animals. Use animals of the most sensitive species and of the minimum age recommended for administration of the immunoserum, unless otherwise justified and authorised.

Animal numbers. The number of animals to be used for the test is prescribed in the general monograph *Immunosera for veterinary use (0030)*.

Identification of animals. Unless otherwise justified and authorised, all animals are marked in a suitable way to ensure individual documentation of data for the whole observation period.

Observation period. Where objective criteria such as body temperature are to be recorded as described below, the animals are examined and observed for at least 3 days prior to administration of the immunoserum. After administration of the immunoserum, the animals are observed and examined at least once every day for a period of at least 14 days for signs of local and systemic reactions. On the day of administration of the immunoserum, at least 1 additional inspection is necessary after 4 h or at intervals as specified in the monograph. Where there is a 2nd administration of the immunoserum the period usually ends 14 days after the 2nd administration.

Local and systemic reactions. Animals showing severe abnormal local or systemic reactions are euthanised. All dead animals undergo a post-mortem with macroscopic examination. Additional microscopic and microbiological investigations may be indicated.

The animals are observed and examined for signs of local and systemic reactions. Where it is known to be a useful indicator, other criteria are recorded, such as body temperature, body mass, other performance measurements and food intake.

Local reactions. As far as appropriate and possible, the size and persistence of any local reaction (including incidence of painful reactions) and the proportion of animals showing local reactions are recorded.

Systemic reactions. Body temperature and, if appropriate, body mass are documented as general indicators of systemic effects of administration of the immunoserum. In addition, all clinical signs are recorded.

Body temperature. For mammals, the studies include measurement of body temperature during the observation period. The body temperatures are recorded beginning at least 3 days before administration of the immunoserum, at the time of administration, 4 h after and at suitable intervals. The body temperature before administration of the immunoserum has to be within the physiological range. At least for immunosera where a significant increase in body temperature may be expected or where an increase in body temperature is specified in an individual monograph, it is recommended to use the mean temperature of the days before administration of the immunoserum (e.g. day – 3 to day 0) as the baseline temperature to have clear guidance for evaluation of the test.

Body mass and food intake. Where it is known to be a reliable and useful indicator of safety, for example in young growing animals, the body mass is measured and documented shortly before administration of the immunoserum and during the observation period. The food intake is monitored and documented as an indicator of the effect of administering the immunoserum. In most cases, it will be sufficient to record the daily ration has been consumed or partly or wholly rejected but, in some cases it may be necessary to record the actual weight of food consumed, if this is a relevant indicator of the safety of the immunoserum.

Clinical signs. All expected and unexpected clinical signs of a general nature are recorded, including changes in health status and behaviour changes.

Score sheets. The score sheets are prepared for each immunoserum in the light of expected signs. All parameters and data are recorded in score sheets. The score sheets contain general parameters but are also adapted for each kind of immunoserum to list clinical signs that might be more evident for a given immunoserum.

Criteria for repeating the test. If an abnormal sign occurs, the responsible veterinarian determines, based on post-mortem examination if necessary, whether this was due to the immunoserum or not. If it is not clear what caused the abnormal sign or where an animal is withdrawn for reasons unrelated to the immunoserum, the test may be repeated. If in the 2nd test there is the same abnormal sign as in the 1st test, the immunoserum does not comply with the test. Any treatment administered to an animal during the observation period is recorded. If the treatment may interfere with the test, the test is invalid.

01/2008:50300

5.3. STATISTICAL ANALYSIS OF RESULTS OF BIOLOGICAL ASSAYS AND TESTS

1. INTRODUCTION

This chapter provides guidance for the design of bioassays prescribed in the European Pharmacopoeia (Ph. Eur.) and for analysis of their results. It is intended for use by those whose primary training and responsibilities are not in statistics, but who have responsibility for analysis or interpretation of the results of these assays, often without the help and advice of a statistician. The methods of calculation described in this annex are not mandatory for the bioassays which themselves constitute a mandatory part of the Ph. Eur. Alternative methods can be used and may be accepted by the competent authorities, provided that they are supported by relevant data and justified during the assay validation process. A wide range of computer software is available and may be useful depending on the facilities available to, and the expertise of, the analyst.

Professional advice should be obtained in situations where: a comprehensive treatment of design and analysis suitable for research or development of new products is required; the restrictions imposed on the assay design by this chapter are not satisfied, for example particular laboratory constraints may require customized assay designs, or equal numbers of equally spaced doses may not be suitable; analysis is required for extended non-linear dose-response curves, for example as may be encountered in immunoassays. An outline of extended dose-response curve analysis for one widely used model is nevertheless included in Section 3.4 and a simple example is given in Section 5.4.

1.1. GENERAL DESIGN AND PRECISION

Biological methods are described for the assay of certain substances and preparations whose potency cannot be adequately assured by chemical or physical analysis. The principle applied wherever possible throughout these assays is that of comparison with a standard preparation so as to determine how much of the substance to be examined produces the same biological effect as a given quantity, the *Unit*, of the standard preparation. It is an essential condition of such methods of biological assay that the tests on the standard preparation and on the substance to be examined be carried out at the same time and under identical conditions.

For certain assays (determination of virus titre for example) the potency of the test sample is not expressed relative to a standard. This type of assay is dealt with in Section 4.5.

Any estimate of potency derived from a biological assay is subject to random error due to the inherent variability of biological responses and calculations of error should be made, if possible, from the results of each assay, even when the official method of assay is used. Methods for the design of assays and the calculation of their errors are, therefore, described below. In every case, before a statistical method is adopted, a preliminary test is to be carried out with an appropriate number of assays, in order to ascertain the applicability of this method.

The confidence interval for the potency gives an indication of the precision with which the potency has been estimated in the assay. It is calculated with due regard to the experimental design and the sample size. The 95 per cent confidence interval is usually chosen in biological assays. Mathematical statistical methods are used to calculate these limits so as to warrant the statement that there is a 95 per cent probability that these limits include the true potency. Whether this precision is acceptable to the European Pharmacopoeia depends on the requirements set in the monograph for the preparation concerned.

The terms “mean” and “standard deviation” are used here as defined in most current textbooks of biometry.

The terms “stated potency” or “labelled potency”, “assigned potency”, “assumed potency”, “potency ratio” and “estimated potency” are used in this section to indicate the following concepts:

- “stated potency” or “labelled potency”: in the case of a formulated product a nominal value assigned from knowledge of the potency of the bulk material; in the case of bulk material the potency estimated by the manufacturer;
- “assigned potency”: the potency of the standard preparation;
- “assumed potency”: the provisionally assigned potency of a preparation to be examined which forms the basis of calculating the doses that would be equipotent with the doses to be used of the standard preparation;
- “potency ratio” of an unknown preparation; the ratio of equipotent doses of the standard preparation and the unknown preparation under the conditions of the assay;
- “estimated potency”: the potency calculated from assay data.

Section 9 (Glossary of symbols) is a tabulation of the more important uses of symbols throughout this annex. Where the text refers to a symbol not shown in this section or uses a symbol to denote a different concept, this is defined in that part of the text.

2. RANDOMISATION AND INDEPENDENCE OF INDIVIDUAL TREATMENTS

The allocation of the different treatments to different experimental units (animals, tubes, etc.) should be made by some strictly random process. Any other choice of experimental conditions that is not deliberately allowed for in the experimental design should also be made randomly. Examples are the choice of positions for cages in a laboratory and the order in which treatments are administered. In particular, a group of animals receiving the same dose of any preparation should not be treated together (at the same time or in the same position) unless there is strong evidence that the relevant source of variation (for example, between times, or between positions) is negligible. Random allocations may be obtained from computers by using the built-in randomisation function. The analyst must check whether a different series of numbers is produced every time the function is started.

The preparations allocated to each experimental unit should be as independent as possible. Within each experimental group, the dilutions allocated to each treatment are not normally divisions of the same dose, but should be prepared individually. Without this precaution, the variability inherent in the preparation will not be fully represented in the experimental error variance. The result will be an under-estimation of the residual error leading to:

1) an unjustified increase in the stringency of the test for the analysis of variance (see Sections 3.2.3 and 3.2.4),

2) an under-estimation of the true confidence limits for the test, which, as shown in Section 3.2.5, are calculated from the estimate of s^2, the residual error mean square.

3. ASSAYS DEPENDING UPON QUANTITATIVE RESPONSES

3.1. STATISTICAL MODELS

3.1.1. GENERAL PRINCIPLES

The bioassays included in the Ph. Eur. have been conceived as "dilution assays", which means that the unknown preparation to be assayed is supposed to contain the same active principle as the standard preparation, but in a different ratio of active and inert components. In such a case the unknown preparation may in theory be derived from the standard preparation by dilution with inert components. To check whether any particular assay may be regarded as a dilution assay, it is necessary to compare the dose-response relationships of the standard and unknown preparations. If these dose-response relationships differ significantly, then the theoretical dilution assay model is not valid. Significant differences in the dose-response relationships for the standard and unknown preparations may suggest that one of the preparations contains, in addition to the active principle, other components which are not inert but which influence the measured responses.

To make the effect of dilution in the theoretical model apparent, it is useful to transform the dose-response relationship to a linear function on the widest possible range of doses. 2 statistical models are of interest as models for the bioassays prescribed: the parallel-line model and the slope-ratio model.

The application of either is dependent on the fulfilment of the following conditions:

1) the different treatments have been randomly assigned to the experimental units,

2) the responses to each treatment are normally distributed,

3) the standard deviations of the responses within each treatment group of both standard and unknown preparations do not differ significantly from one another.

When an assay is being developed for use, the analyst has to determine that the data collected from many assays meet these theoretical conditions.

- Condition 1 can be fulfilled by an efficient use of Section 2.
- Condition 2 is an assumption which in practice is almost always fulfilled. Minor deviations from this assumption will in general not introduce serious flaws in the analysis as long as several replicates per treatment are included. In case of doubt, a test for deviations from normality (e.g. the Shapiro-Wilk[(1)] test) may be performed.
- Condition 3 can be checked with a test for homogeneity of variances (e.g. Bartlett's[(2)] test, Cochran's[(3)] test). Inspection of graphical representations of the data can also be very instructive for this purpose (see examples in Section 5).

When conditions 2 and/or 3 are not met, a transformation of the responses may bring a better fulfilment of these conditions. Examples are $\ln y$, $\sqrt{y}$, y^2.

- Logarithmic transformation of the responses y to $\ln y$ can be useful when the homogeneity of variances is not satisfactory. It can also improve the normality if the distribution is skewed to the right.
- The transformation of y to $\sqrt{y}$ is useful when the observations follow a Poisson distribution i.e. when they are obtained by counting.
- The square transformation of y to y^2 can be useful if, for example, the dose is more likely to be proportional to the area of an inhibition zone rather than the measured diameter of that zone.

For some assays depending on quantitative responses, such as immunoassays or cell-based *in vitro* assays, a large number of doses is used. These doses give responses that completely span the possible response range and produce an extended non-linear dose-response curve. Such curves are typical for all bioassays, but for many assays the use of a large number of doses is not ethical (for example, *in vivo* assays) or practical, and the aims of the assay may be achieved with a limited number of doses. It is therefore customary to restrict doses to that part of the dose-response range which is linear under suitable transformation, so that the methods of Sections 3.2 or 3.3 apply. However, in some cases analysis of extended dose-response curves may be desirable. An outline of one model which may be used for such analysis is given in Section 3.4 and a simple example is shown in Section 5.4.

There is another category of assays in which the response cannot be measured in each experimental unit, but in which only the fraction of units responding to each treatment can be counted. This category is dealt with in Section 4.

3.1.2. ROUTINE ASSAYS

When an assay is in routine use, it is seldom possible to check systematically for conditions 1 to 3, because the limited number of observations per assay is likely to influence the sensitivity of the statistical tests. Fortunately, statisticians have shown that, in symmetrical balanced assays, small deviations from homogeneity of variance and normality do not seriously affect the assay results. The applicability of the statistical model needs to be questioned only if a series of assays shows doubtful validity. It may then be necessary to perform a new series of preliminary investigations as discussed in Section 3.1.1.

2 other necessary conditions depend on the statistical model to be used:

- for the parallel-line model:

  4A) the relationship between the logarithm of the dose and the response can be represented by a straight line over the range of doses used,

  5A) for any unknown preparation in the assay the straight line is parallel to that for the standard.
- for the slope-ratio model:

  4B) the relationship between the dose and the response can be represented by a straight line for each preparation in the assay over the range of doses used,

  5B) for any unknown preparation in the assay the straight line intersects the y-axis (at zero dose) at the same point as the straight line of the standard preparation (i.e. the response functions of all preparations in the assay must have the same intercept as the response function of the standard).

Conditions 4A and 4B can be verified only in assays in which at least 3 dilutions of each preparation have been tested. The use of an assay with only 1 or 2 dilutions may be justified when experience has shown that linearity and parallelism or equal intercept are regularly fulfilled.

After having collected the results of an assay, and before calculating the relative potency of each test sample, an analysis of variance is performed, in order to check whether conditions 4A and 5A (or 4B and 5B) are fulfilled. For this, the total sum of squares is subdivided into a certain number of sum of squares corresponding to each condition which has to be fulfilled. The remaining sum of squares represents the

(1) Wilk, M.B. and Shapiro, S.S. (1968). The joint assessment of normality of several independent samples, *Technometrics* 10, 825-839.
(2) Bartlett, M.S. (1937). Properties of sufficiency and statistical tests, *Proc. Roy. Soc. London*, Series A 160, 280-282.
(3) Cochran, W.G. (1951). Testing a linear relation among variances, *Biometrics* 7, 17-32.

residual experimental error to which the absence or existence of the relevant sources of variation can be compared by a series of *F*-ratios.

When validity is established, the potency of each unknown relative to the standard may be calculated and expressed as a potency ratio or converted to some unit relevant to the preparation under test e.g. an International Unit. Confidence limits may also be estimated from each set of assay data.

Assays based on the parallel-line model are discussed in Section 3.2 and those based on the slope-ratio model in Section 3.3.

If any of the 5 conditions (1, 2, 3, 4A, 5A or 1, 2, 3, 4B, 5B) are not fulfilled, the methods of calculation described here are invalid and an investigation of the assay technique should be made.

The analyst should not adopt another transformation unless it is shown that non-fulfilment of the requirements is not incidental but is due to a systematic change in the experimental conditions. In this case, testing as described in Section 3.1.1 should be repeated before a new transformation is adopted for the routine assays.

Excess numbers of invalid assays due to non-parallelism or non-linearity, in a routine assay carried out to compare similar materials, are likely to reflect assay designs with inadequate replication. This inadequacy commonly results from incomplete recognition of all sources of variability affecting the assay, which can result in underestimation of the residual error leading to large *F*-ratios.

It is not always feasible to take account of all possible sources of variation within one single assay (e.g. day-to-day variation). In such a case, the confidence intervals from repeated assays on the same sample may not satisfactorily overlap, and care should be exercised in the interpretation of the individual confidence intervals. In order to obtain a more reliable estimate of the confidence interval it may be necessary to perform several independent assays and to combine these into one single potency estimate and confidence interval (see Section 6).

For the purpose of quality control of routine assays it is recommended to keep record of the estimates of the slope of regression and of the estimate of the residual error in control charts.

- An exceptionally high residual error may indicate some technical problem. This should be investigated and, if it can be made evident that something went wrong during the assay procedure, the assay should be repeated. An unusually high residual error may also indicate the presence of an occasional outlying or aberrant observation. A response that is questionable because of failure to comply with the procedure during the course of an assay is rejected. If an aberrant value is discovered after the responses have been recorded, but can then be traced to assay irregularities, omission may be justified. The arbitrary rejection or retention of an apparently aberrant response can be a serious source of bias. In general, the rejection of observations solely because a test for outliers is significant, is discouraged.
- An exceptionally low residual error may once in a while occur and cause the *F*-ratios to exceed the critical values. In such a case it may be justified to replace the residual error estimated from the individual assay, by an average residual error based on historical data recorded in the control charts.

3.1.3. CALCULATIONS AND RESTRICTIONS

According to general principles of good design the following 3 restrictions are normally imposed on the assay design. They have advantages both for ease of computation and for precision.

a) Each preparation in the assay must be tested with the same number of dilutions.

b) In the parallel-line model, the ratio of adjacent doses must be constant for all treatments in the assay; in the slope-ratio model, the interval between adjacent doses must be constant for all treatments in the assay.

c) There must be an equal number of experimental units to each treatment.

If a design is used which meets these restrictions, the calculations are simple. The formulae are given in Sections 3.2 and 3.3. It is recommended to use software which has been developed for this special purpose. There are several programs in existence which can easily deal with all assay-designs described in the monographs. Not all programs may use the same formulae and algorithms, but they should all lead to the same results.

Assay designs not meeting the above mentioned restrictions may be both possible and correct, but the necessary formulae are too complicated to describe in this text. A brief description of methods for calculation is given in Section 7.1. These methods can also be used for the restricted designs, in which case they are equivalent with the simple formulae.

The formulae for the restricted designs given in this text may be used, for example, to create *ad hoc* programs in a spreadsheet. The examples in Section 5 can be used to clarify the statistics and to check whether such a program gives correct results.

3.2. THE PARALLEL-LINE MODEL

3.2.1. INTRODUCTION

The parallel-line model is illustrated in Figure 3.2.1.-I. The logarithm of the doses are represented on the horizontal axis with the lowest concentration on the left and the highest concentration on the right. The responses are indicated on the vertical axis. The individual responses to each treatment are indicated with black dots. The 2 lines are the calculated ln(dose)-response relationship for the standard and the unknown.

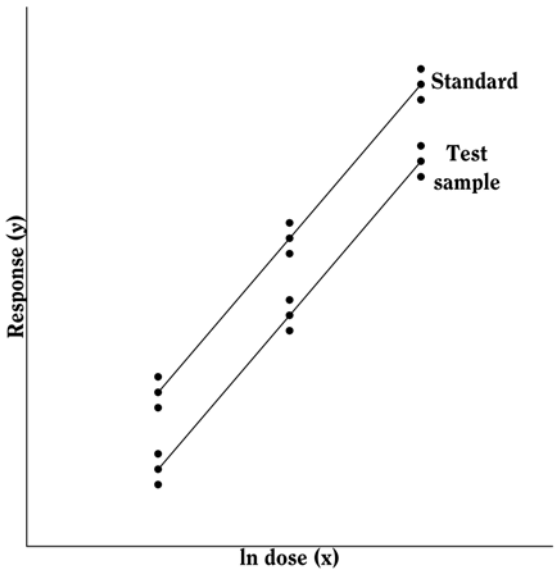

Figure 3.2.1.-I. – *The parallel-line model for a 3 + 3 assay*

Note: the natural logarithm (ln or $\log_e$) is used throughout this text. Wherever the term "antilogarithm" is used, the quantity e^x is meant. However, the Briggs or "common" logarithm (log or $\log_{10}$) can equally well be used. In this case the corresponding antilogarithm is 10^x.

For a satisfactory assay the assumed potency of the test sample must be close to the true potency. On the basis of this assumed potency and the assigned potency of the standard, equipotent dilutions (if feasible) are prepared, i.e. corresponding doses of standard and unknown are expected to give the same

response. If no information on the assumed potency is available, preliminary assays are carried out over a wide range of doses to determine the range where the curve is linear.

The more nearly correct the assumed potency of the unknown, the closer the 2 lines will be together, for they should give equal responses at equal doses. The horizontal distance between the lines represents the "true" potency of the unknown, relative to its assumed potency. The greater the distance between the 2 lines, the poorer the assumed potency of the unknown. If the line of the unknown is situated to the right of the standard, the assumed potency was overestimated, and the calculations will indicate an estimated potency lower than the assumed potency. Similarly, if the line of the unknown is situated to the left of the standard, the assumed potency was underestimated, and the calculations will indicate an estimated potency higher than the assumed potency.

3.2.2. ASSAY DESIGN

The following considerations will be useful in optimising the precision of the assay design:

1) the ratio between the slope and the residual error should be as large as possible,

2) the range of doses should be as large as possible,

3) the lines should be as close together as possible, i.e. the assumed potency should be a good estimate of the true potency.

The allocation of experimental units (animals, tubes, etc.) to different treatments may be made in various ways.

3.2.2.1. Completely randomised design

If the totality of experimental units appears to be reasonably homogeneous with no indication that variability in response will be smaller within certain recognisable sub-groups, the allocation of the units to the different treatments should be made randomly.

If units in sub-groups such as physical positions or experimental days are likely to be more homogeneous than the totality of the units, the precision of the assay may be increased by introducing one or more restrictions into the design. A careful distribution of the units over these restrictions permits irrelevant sources of variation to be eliminated.

3.2.2.2. Randomised block design

In this design it is possible to segregate an identifiable source of variation, such as the sensitivity variation between litters of experimental animals or the variation between Petri dishes in a diffusion microbiological assay. The design requires that every treatment be applied an equal number of times in every block (litter or Petri dish) and is suitable only when the block is large enough to accommodate all treatments once. This is illustrated in Section 5.1.3. It is also possible to use a randomised design with repetitions. The treatments should be allocated randomly within each block. An algorithm to obtain random permutations is given in Section 8.5.

3.2.2.3. Latin square design

This design is appropriate when the response may be affected by two different sources of variation each of which can assume k different levels or positions. For example, in a plate assay of an antibiotic the treatments may be arranged in a $k \times k$ array on a large plate, each treatment occurring once in each row and each column. The design is suitable when the number of rows, the number of columns and the number of treatments are equal. Responses are recorded in a square format known as a Latin square. Variations due to differences in response among the k rows and among the k columns may be segregated, thus reducing the error. An example of a Latin square design is given in Section 5.1.2. An algorithm to obtain Latin squares is given in Section 8.6. More complex designs in which one or more treatments are replicated within the Latin square may be useful in some circumstances. The simplified formulae given in this Chapter are not appropriate for such designs, and professional advice should be obtained.

3.2.2.4. Cross-over design

This design is useful when the experiment can be sub-divided into blocks but it is possible to apply only 2 treatments to each block. For example, a block may be a single unit that can be tested on 2 occasions. The design is intended to increase precision by eliminating the effects of differences between units while balancing the effect of any difference between general levels of response at the 2 occasions. If 2 doses of a standard and of an unknown preparation are tested, this is known as a twin cross-over test.

The experiment is divided into 2 parts separated by a suitable time interval. Units are divided into 4 groups and each group receives 1 of the 4 treatments in the first part of the test. Units that received one preparation in the first part of the test receive the other preparation on the second occasion, and units receiving small doses in one part of the test receive large doses in the other. The arrangement of doses is shown in Table 3.2.2.-I. An example can be found in Section 5.1.5.

Table 3.2.2.-I. – *Arrangement of doses in cross-over design*

Group of units	Time I	Time II
1	S_1	T_2
2	S_2	T_1
3	T_1	S_2
4	T_2	S_1

3.2.3. ANALYSIS OF VARIANCE

This section gives formulae that are required to carry out the analysis of variance and will be more easily understood by reference to the worked examples in Section 5.1. Reference should also be made to the glossary of symbols (Section 9).

The formulae are appropriate for symmetrical assays where one or more preparations to be examined (T, U, etc.) are compared with a standard preparation (S). It is stressed that the formulae can only be used if the doses are equally spaced, if equal numbers of treatments per preparation are applied, and each treatment is applied an equal number of times. It should not be attempted to use the formulae in any other situation.

Apart from some adjustments to the error term, the basic analysis of data derived from an assay is the same for completely randomised, randomised block and Latin square designs. The formulae for cross-over tests do not entirely fit this scheme and these are incorporated into Example 5.1.5.

Having considered the points discussed in Section 3.1 and transformed the responses, if necessary, the values should be averaged over each treatment and each preparation, as shown in Table 3.2.3.-I. The linear contrasts, which relate to the slopes of the ln(dose)-response lines, should also be formed. 3 additional formulae, which are necessary for the construction of the analysis of variance, are shown in Table 3.2.3.-II.

The total variation in response caused by the different treatments is now partitioned as shown in Table 3.2.3.-III the sums of squares being derived from the values obtained in Tables 3.2.3.-I and 3.2.3.-II. The sum of squares due to non-linearity can only be calculated if at least 3 doses per preparation are included in the assay.

The residual error of the assay is obtained by subtracting the variations allowed for in the design from the total variation in response (Table 3.2.3.-IV). In this table $\overline{y}$ represents the mean of all responses recorded in the assay. It should be noted that for a Latin square the number of replicate responses (n) is equal to the number of rows, columns or treatments (dh).

The analysis of variance is now completed as follows. Each sum of squares is divided by the corresponding number of degrees of freedom to give mean squares. The mean square for each variable to be tested is now expressed as a ratio to the

Table 3.2.3.-I. – *Formulae for parallel-line assays with d doses of each preparation*

	Standard (*S*)	**1st Test sample (*T*)**	**2nd Test sample (*U*, etc.)**
Mean response lowest dose	S_1	T_1	U_1
Mean response 2nd dose	S_2	T_2	U_2
...	...	...	...
Mean response highest dose	S_d	T_d	U_d
Total preparation	$P_S = S_1 + S_2 + ... + S_d$	$P_T = T_1 + T_2 + ... + T_d$	$P_U = ...\text{etc.}$
Linear contrast	$L_S = 1S_1 + 2S_2 + ... + dS_d - \frac{1}{2}(d+1)P_S$	$L_T = 1T_1 + 2T_2 + ... + dT_d - \frac{1}{2}(d+1)P_T$	$L_U = ...\text{etc.}$

Table 3.2.3.-II. – *Additional formulae for the construction of the analysis of variance*

$H_P = \frac{n}{d}$	$H_L = \frac{12n}{d^3 - d}$	$K = \frac{n(P_S + P_T + ...)^2}{hd}$

Table 3.2.3.-III. – *Formulae to calculate the sum of squares and degrees of freedom*

Source of variation	**Degrees of freedom (*f*)**	**Sum of squares**
Preparations	$h - 1$	$SS_{\text{prep}} = H_P(P_S^2 + P_T^2 + ...) - K$
Linear regression	1	$SS_{\text{reg}} = \frac{1}{h}H_L(L_S + L_T + ...)^2$
Non-parallelism	$h - 1$	$SS_{\text{par}} = H_L(L_S^2 + L_T^2 + ...) - SS_{\text{reg}}$
Non-linearity*	$h(d-2)$	$SS_{\text{lin}} = SS_{\text{treat}} - SS_{\text{prep}} - SS_{\text{reg}} - SS_{\text{par}}$
Treatments	$hd - 1$	$SS_{\text{treat}} = n(S_1^2 + ... + S_d^2 + T_1^2 + ... + T_d^2 + ...) - K$
* Not calculated for two-dose assays		

Table 3.2.3.-IV. – *Estimation of the residual error*

Source of variation		**Degrees of freedom**	**Sum of squares**
Blocks (rows)*		$n - 1$	$SS_{\text{block}} = hd(R_1^2 + ... + R_n^2) - K$
Columns**		$n - 1$	$SS_{\text{col}} = hd(C_1^2 + ... + C_n^2) - K$
Residual error***	**Completely randomised**	$hd(n-1)$	$SS_{\text{res}} = SS_{\text{tot}} - SS_{\text{treat}}$
	Randomised block	$(hd-1)(n-1)$	$SS_{\text{res}} = SS_{\text{tot}} - SS_{\text{treat}} - SS_{\text{block}}$
	Latin square	$(hd-2)(n-1)$	$SS_{\text{res}} = SS_{\text{tot}} - SS_{\text{treat}} - SS_{\text{block}} - SS_{\text{col}}$
Total		$nhd - 1$	$SS_{\text{tot}} = \sum(y - \overline{y})^2$

For Latin square designs, these formulae are only applicable if $n = hd$
* Not calculated for completely randomised designs
** Only calculated for Latin square designs
*** Depends on the type of design

residual error (s^2) and the significance of these values (known as *F*-ratios) are assessed by use of Table 8.1 or a suitable sub-routine of a computer program.

3.2.4. TESTS OF VALIDITY

Assay results are said to be "statistically valid" if the outcome of the analysis of variance is as follows.

1) The linear regression term is significant, i.e. the calculated probability is less than 0.05. If this criterion is not met, it is not possible to calculate 95 per cent confidence limits.

2) The term for non-parallelism is not significant, i.e. the calculated probability is not less than 0.05. This indicates that condition 5A, Section 3.1, is satisfied;

3) The term for non-linearity is not significant, i.e. the calculated probability is not less than 0.05. This indicates that condition 4A, Section 3.1, is satisfied.

A significant deviation from parallelism in a multiple assay may be due to the inclusion in the assay-design of a preparation to be examined that gives an ln(dose)-response line with a slope different from those for the other preparations. Instead of declaring the whole assay invalid, it may then be decided to eliminate all data relating to that preparation and to restart the analysis from the beginning.

When statistical validity is established, potencies and confidence limits may be estimated by the methods described in the next section.

3.2.5. ESTIMATION OF POTENCY AND CONFIDENCE LIMITS

If I is the ln of the ratio between adjacent doses of any preparation, the common slope (b) for assays with d doses of each preparation is obtained from:

$$b = \frac{H_L\,(L_S + L_T + ...)}{Inh} \qquad (3.2.5.\text{-}1)$$

and the logarithm of the potency ratio of a test preparation, for example T, is:

$$M'_T = \frac{P_T - P_S}{db} \qquad (3.2.5.\text{-}2)$$

The calculated potency is an estimate of the "true potency" of each unknown. Confidence limits may be calculated as the antilogarithms of:

$$CM'_T \pm \sqrt{(C-1)\,(CM'^2_T + 2V)} \qquad (3.2.5.\text{-}3)$$

where $C = \dfrac{SS_{\text{reg}}}{SS_{\text{reg}} - s^2t^2}$ and $V = \dfrac{SS_{\text{reg}}}{b^2dn}$

The value of t may be obtained from Table 8.2 for $p = 0.05$ and degrees of freedom equal to the number of the degrees of freedom of the residual error. The estimated potency (R_T) and associated confidence limits are obtained by multiplying the values obtained by A_T after antilogarithms have been taken. If the stock solutions are not exactly equipotent on the basis of assigned and assumed potencies, a correction factor is necessary (See Examples 5.1.2 and 5.1.3).

3.2.6. MISSING VALUES

In a balanced assay, an accident totally unconnected with the applied treatments may lead to the loss of one or more responses, for example because an animal dies. If it is considered that the accident is in no way connected with the composition of the preparation administered, the exact calculations can still be performed but the formulae are necessarily more complicated and can only be given within the framework of general linear models (see Section 7.1). However, there exists an approximate method which keeps the simplicity of the balanced design by replacing the missing response by a calculated value. The loss of information is taken into account by diminishing the degrees of freedom for the total sum of squares and for the residual error by the number of missing values and using one of the formulae below for the missing values. It should be borne in mind that this is only an approximate method, and that the exact method is to be preferred.

If more than one observation is missing, the same formulae can be used. The procedure is to make a rough guess at all the missing values except one, and to use the proper formula for this one, using all the remaining values including the rough guesses. Fill in the calculated value. Continue by similarly calculating a value for the first rough guess. After calculating all the missing values in this way the whole cycle is repeated from the beginning, each calculation using the most recent guessed or calculated value for every response to which the formula is being applied. This continues until 2 consecutive cycles give the same values; convergence is usually rapid.

Provided that the number of values replaced is small relative to the total number of observations in the full experiment (say less than 5 per cent), the approximation implied in this replacement and reduction of degrees of freedom by the number of missing values so replaced is usually fairly satisfactory. The analysis should be interpreted with great care however, especially if there is a preponderance of missing values in one treatment or block, and a biometrician should be consulted if any unusual features are encountered. Replacing missing values in a test without replication is a particularly delicate operation.

Completely randomised design

In a completely randomised assay the missing value can be replaced by the arithmetic mean of the other responses to the same treatment.

Randomised block design

The missing value is obtained using the equation:

$$y' = \frac{nB' + kT' - G'}{(n-1)\,(k-1)} \qquad (3.2.6.\text{-}1)$$

where B' is the sum of the responses in the block containing the missing value, T' the corresponding treatment total and G' is the sum of all responses recorded in the assay.

Latin square design

The missing value y' is obtained from:

$$y' = \frac{k\,(B' + C' + T') - 2G'}{(k-1)\,(k-2)} \qquad (3.2.6.\text{-}2)$$

where B' and C' are the sums of the responses in the row and column containing the missing value. In this case $k = n$.

Cross-over design

If an accident leading to loss of values occurs in a cross-over design, a book on statistics should be consulted (e.g. D.J. Finney, see Section 10), because the appropriate formulae depend upon the particular treatment combinations.

3.3. THE SLOPE-RATIO MODEL

3.3.1. INTRODUCTION

This model is suitable, for example, for some microbiological assays when the independent variable is the concentration of an essential growth factor below the optimal concentration of the medium. The slope-ratio model is illustrated in Figure 3.3.1.-I.

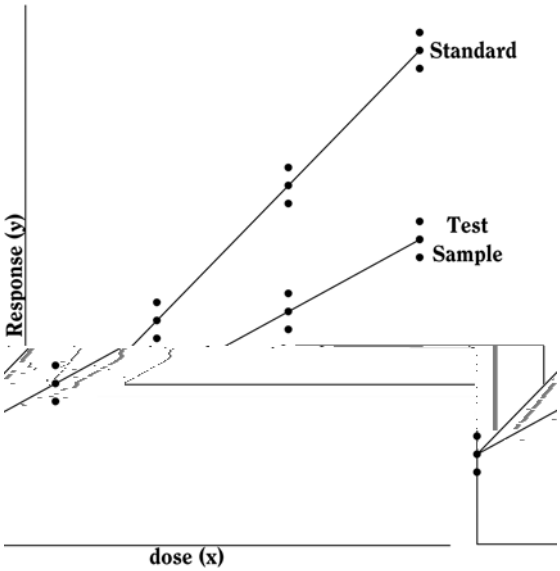

Figure 3.3.1.-I. – *The slope-ratio model for a 2 × 3 + 1 assay*

The doses are represented on the horizontal axis with zero concentration on the left and the highest concentration on the right. The responses are indicated on the vertical axis. The individual responses to each treatment are indicated with black dots. The 2 lines are the calculated dose-response relationship for the standard and the unknown under the assumption that they intersect each other at zero-dose. Unlike the parallel-line model, the doses are not transformed to logarithms.

Just as in the case of an assay based on the parallel-line model, it is important that the assumed potency is close to the true potency, and to prepare equipotent dilutions of the test preparations and the standard (if feasible). The more nearly correct the assumed potency, the closer the 2 lines will be together. The ratio of the slopes represents the "true" potency of the unknown, relative to its assumed potency. If

the slope of the unknown preparation is steeper than that of the standard, the potency was underestimated and the calculations will indicate an estimated potency higher than the assumed potency. Similarly, if the slope of the unknown is less steep than that of the standard, the potency was overestimated and the calculations will result in an estimated potency lower than the assumed potency.

In setting up an experiment, all responses should be examined for the fulfilment of the conditions 1, 2 and 3 in Section 3.1. The analysis of variance to be performed in routine is described in Section 3.3.3 so that compliance with conditions 4B and 5B of Section 3.1 may be examined.

3.3.2. ASSAY DESIGN

The use of the statistical analysis presented below imposes the following restrictions on the assay:

a) the standard and the test preparations must be tested with the same number of equally spaced dilutions,

b) an extra group of experimental units receiving no treatment may be tested (the blanks),

c) there must be an equal number of experimental units to each treatment.

As already remarked in Section 3.1.3, assay designs not meeting these restrictions may be both possible and correct, but the simple statistical analyses presented here are no longer applicable and either expert advice should be sought or suitable software should be used.

A design with 2 doses per preparation and 1 blank, the "common zero (2*h* + 1)-design", is usually preferred, since it gives the highest precision combined with the possibility to check validity within the constraints mentioned above. However, a linear relationship cannot always be assumed to be valid down to zero-dose. With a slight loss of precision a design without blanks may be adopted. In this case 3 doses per preparation, the "common zero (3*h*)-design", are preferred to 2 doses per preparation. The doses are thus given as follows:

1) the standard is given in a high dose, near to but not exceeding the highest dose giving a mean response on the straight portion of the dose-response line,

2) the other doses are uniformly spaced between the highest dose and zero dose,

3) the test preparations are given in corresponding doses based on the assumed potency of the material.

A completely randomised, a randomised block or a Latin square design may be used, such as described in Section 3.2.2. The use of any of these designs necessitates an adjustment to the error sum of squares as described for assays based on the parallel-line model. The analysis of an assay of one or more test preparations against a standard is described below.

3.3.3. ANALYSIS OF VARIANCE

3.3.3.1. The (*hd* + 1)-design

The responses are verified as described in Section 3.1 and, if necessary, transformed. The responses are then averaged over each treatment and each preparation as shown in Table 3.3.3.1.-I. Additionally, the mean response for blanks (*B*) is calculated.

The sums of squares in the analysis of variance are calculated as shown in Tables 3.3.3.1.-I to 3.3.3.1.-III. The sum of squares due to non-linearity can only be calculated if at least 3 doses of each preparation have been included in the assay. The residual error is obtained by subtracting the variations allowed for in the design from the total variation in response (Table 3.3.3.1.-IV).

The analysis of variance is now completed as follows. Each sum of squares is divided by the corresponding number of degrees of freedom to give mean squares. The mean square for each variable to be tested is now expressed as a ratio to the residual error (s^2) and the significance of these values (known as *F*-ratios) are assessed by use of Table 8.1 or a suitable sub-routine of a computer program.

3.3.3.2. The (*hd*)-design

The formulae are basically the same as those for the (*hd* + 1)-design, but there are some slight differences.

- *B* is discarded from all formulae.
- $K = \dfrac{n\,(P_S + P_T + \ldots)^2}{hd}$
- SS_{blank} is removed from the analysis of variance.
- The number of degrees of freedom for treatments becomes *hd* – 1.
- The number of degrees of freedom of the residual error and the total variance is calculated as described for the parallel-line model (see Table 3.2.3.-IV).

Validity of the assay, potency and confidence interval are found as described in Sections 3.3.4 and 3.3.5.

Table 3.3.3.1.-I. – *Formulae for slope-ratio assays with d doses of each preparation and a blank*

	Standard (*S*)	**1st Test sample (*T*)**	**2nd Test sample (*U*, etc.)**
Mean response lowest dose	S_1	T_1	U_1
Mean response 2nd dose	S_2	T_2	U_2
…	…	…	…
Mean response highest dose	S_d	T_d	U_d
Total preparation	$P_S = S_1 + S_2 + \ldots + S_d$	$P_T = T_1 + T_2 + \ldots + T_d$	$P_U = \ldots$
Linear product	$L_S = 1S_1 + 2S_2 + \ldots + dS_d$	$L_T = 1T_1 + 2T_2 + \ldots + dT_d$	$L_U = \ldots$
Intercept value	$a_S = (4d+2)\,P_S - 6L_S$	$a_T = (4d+2)\,P_T - 6L_T$	$a_U = \ldots$
Slope value	$b_S = 2L_S - (d+1)\,P_S$	$b_T = 2L_T - (d+1)\,P_T$	$b_U = \ldots$
Treatment value	$G_S = S_1^2 + \ldots + S_d^2$	$G_T = T_1^2 + \ldots + T_d^2$	$G_U = \ldots$
Non-linearity*	$J_S = G_S - \dfrac{P_S^2}{d} - \dfrac{3b_S^2}{d^3 - d}$	$J_T = G_T - \dfrac{P_T^2}{d} - \dfrac{3b_T^2}{d^3 - d}$	$J_U = \ldots$

* Not calculated for two-dose assays

Table 3.3.3.1.-II. – *Additional formulae for the construction of the analysis of variance*

$H_B = \frac{nhd^2 - nhd}{hd^2 - hd + 4d + 2}$	$H_I = \frac{n}{4d^3 - 2d^2 - 2d}$	$a = \frac{a_S + a_T + \ldots}{h\left(d^2 - d\right)}$	$K = \frac{n\left(B + P_S + P_T + \ldots\right)^2}{hd + 1}$

Table 3.3.3.1.-III. – *Formulae to calculate the sum of squares and degrees of freedom*

Source of variation	Degrees of freedom (*f*)	Sum of squares
Regression	h	$SS_{\text{reg}} = SS_{\text{treat}} - SS_{\text{blank}} - SS_{\text{int}} - SS_{\text{lin}}$
Blanks	1	$SS_{\text{blank}} = H_B\left(B - a\right)^2$
Intersection	$h - 1$	$SS_{\text{int}} = H_I\left(\left(a_S^2 + a_T^2 + \ldots\right) - h\left(d^2 - d\right)^2 a^2\right)$
Non-linearity*	$h\left(d - 2\right)$	$SS_{\text{lin}} = n\left(J_S + J_T + \ldots\right)$
Treatments	hd	$SS_{\text{treat}} = n\left(B^2 + G_S + G_T + \ldots\right) - K$

* Not calculated for two-dose assays

Table 3.3.3.1.-IV. – *Estimation of the residual error*

Source of variation		Degrees of freedom	Sum of squares
Blocks (rows)*		$n - 1$	$SS_{block} = hd\left(R_1^2 + \ldots + R_n^2\right) - K$
Columns**		$n - 1$	$SS_{col} = hd\left(C_1^2 + \ldots + C_n^2\right) - K$
Residual error***	**Completely randomised**	$\left(hd + 1\right)\left(n - 1\right)$	$SS_{res} = SS_{tot} - SS_{treat}$
	Randomised block	$hd\left(n - 1\right)$	$SS_{res} = SS_{tot} - SS_{treat} - SS_{block}$
	Latin square	$\left(hd - 1\right)\left(n - 1\right)$	$SS_{res} = SS_{tot} - SS_{treat} - SS_{block} - SS_{col}$
Total		$nhd + n - 1$	$SS_{tot} = \sum\left(y - \overline{y}\right)^2$

For Latin square designs, these formulae are only applicable if $n = hd$
* Not calculated for completely randomised designs
** Only calculated for Latin square designs
*** Depends on the type of design

3.3.4. TESTS OF VALIDITY

Assay results are said to be "statistically valid" if the outcome of the analysis of variance is as follows:

1) the variation due to blanks in (hd + 1)-designs is not significant, i.e. the calculated probability is not smaller than 0.05. This indicates that the responses of the blanks do not significantly differ from the common intercept and the linear relationship is valid down to zero dose;

2) the variation due to intersection is not significant, i.e. the calculated probability is not less than 0.05. This indicates that condition 5B, Section 3.1 is satisfied;

3) in assays including at least 3 doses per preparation, the variation due to non-linearity is not significant, i.e. the calculated probability is not less than 0.05. This indicates that condition 4B, Section 3.1 is satisfied.

A significant variation due to blanks indicates that the hypothesis of linearity is not valid near zero dose. If this is likely to be systematic rather than incidental for the type of assay, the (hd-design) is more appropriate. Any response to blanks should then be disregarded.

When these tests indicate that the assay is valid, the potency is calculated with its confidence limits as described in Section 3.3.5.

3.3.5. ESTIMATION OF POTENCY AND CONFIDENCE LIMITS

3.3.5.1. The (*hd* + 1)-design

The common intersection a' of the preparations can be calculated from:

$$a' = \frac{\left(2d + 1\right)B + \left(2d - 3\right)ha}{h\left(2d - 3\right) + 2d + 1} \qquad (3.3.5.1.\text{-}1)$$

The slope of the standard, and similarly for each of the other preparations, is calculated from:

$$b'_S = \frac{6L_S - 3d\left(d + 1\right)a'}{2d^3 + 3d^2 + d} \qquad (3.3.5.1.\text{-}2)$$

The potency ratio of each of the test preparations can now be calculated from:

$$R'_T = \frac{b'_T}{b'_S} \qquad (3.3.5.1.\text{-}3)$$

which has to be multiplied by A_T, the assumed potency of the test preparation, in order to find the estimated potency R_T. If the step between adjacent doses was not identical for the standard and the test preparation, the potency has to be multiplied by I_S/I_T. Note that, unlike the parallel-line analysis, no antilogarithms are calculated.

The confidence interval for R_T' is calculated from:

$$CR'_T - K' \pm \sqrt{(C-1)\left(CR'^2_T + 1\right) + K'\left(K' - 2CR'_T\right)} \qquad (3.3.5.1.\text{-}4)$$

$$\text{where } C = \frac{b'^2_S}{b'^2_S - s^2 t^2 V_1} \text{ and } K' = (C-1)\,V_2$$

V_1 are V_2 are related to the variance and covariance of the numerator and denominator of R_T. They can be obtained from:

$$V_1 = \frac{6}{n\,(2d+1)}\left(\frac{1}{d\,(d+1)} + \frac{3}{2\,(2d+1) + hd\,(d-1)}\right) \qquad (3.3.5.1.\text{-}5)$$

$$V_2 = \frac{3d\,(d+1)}{(3d+1)\,(d+2) + hd\,(d-1)} \qquad (3.3.5.1.\text{-}6)$$

The confidence limits are multiplied by A_T, and if necessary by I_S/I_T.

3.3.5.2. The (*hd*)-design

The formulae are the same as for the (hd + 1)-design, with the following modifications:

$$a' = a \qquad (3.3.5.2.\text{-}1)$$

$$V_1 = \frac{6}{nd\,(2d+1)}\left(\frac{1}{d+1} + \frac{3}{h\,(d-1)}\right) \qquad (3.3.5.2.\text{-}2)$$

$$V_2 = \frac{3\,(d+1)}{3\,(d+1) + h\,(d-1)} \qquad (3.3.5.2.\text{-}3)$$

3.4. EXTENDED SIGMOID DOSE-RESPONSE CURVES

This model is suitable, for example, for some immunoassays when analysis is required of extended sigmoid dose-response curves. This model is illustrated in Figure 3.4.-I.

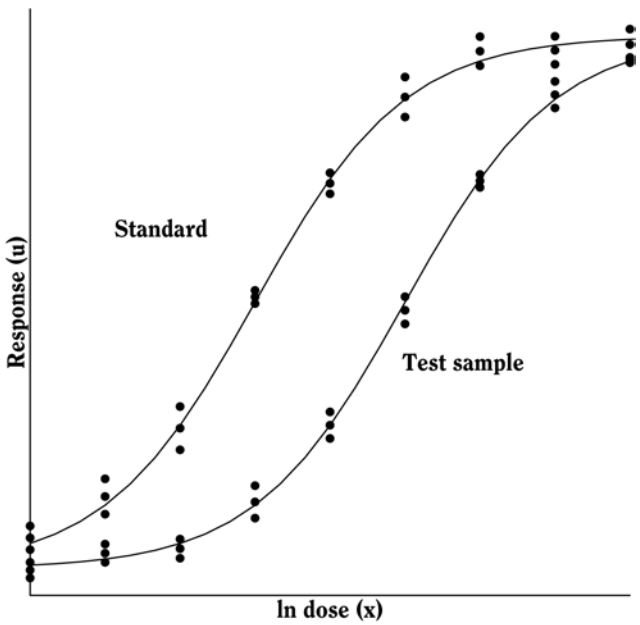

Figure 3.4.-I. – *The four-parameter logistic curve model*

The logarithms of the doses are represented on the horizontal axis with the lowest concentration on the left and the highest concentration on the right. The responses are indicated on the vertical axis. The individual responses to each treatment are indicated with black dots. The 2 curves are the calculated ln(dose)-response relationship for the standard and the test preparation.

The general shape of the curves can usually be described by a logistic function but other shapes are also possible. Each curve can be characterised by 4 parameters: The upper asymptote (α), the lower asymptote (δ), the slope-factor (β), and the horizontal location (γ). This model is therefore often referred to as a four-parameter model. A mathematical representation of the ln(dose)-response curve is:

$$u = \delta + \frac{\alpha - \delta}{1 + e^{-\beta(x-\gamma)}}$$

For a valid assay it is necessary that the curves of the standard and the test preparations have the same slope-factor, and the same maximum and minimum response level at the extreme parts. Only the horizontal location (γ) of the curves may be different. The horizontal distance between the curves is related to the "true" potency of the unknown. If the assay is used routinely, it may be sufficient to test the condition of equal upper and lower response levels when the assay is developed, and then to retest this condition directly only at suitable intervals or when there are changes in materials or assay conditions.

The maximum-likelihood estimates of the parameters and their confidence intervals can be obtained with suitable computer programs. These computer programs may include some statistical tests reflecting validity. For example, if the maximum likelihood estimation shows significant deviations from the fitted model under the assumed conditions of equal upper and lower asymptotes and slopes, then one or all of these conditions may not be satisfied.

The logistic model raises a number of statistical problems which may require different solutions for different types of assays, and no simple summary is possible. A wide variety of possible approaches is described in the relevant literature. Professional advice is therefore recommended for this type of analysis. A simple example is nevertheless included in Section 5.4 to illustrate a "possible" way to analyse the data presented. A short discussion of alternative approaches and other statistical considerations is given in Section 7.5.

If professional advice or suitable software is not available, alternative approaches are possible: 1) if "reasonable" estimates of the upper limit (α) and lower limit (δ) are available, select for all preparations the doses with mean of the responses (u) falling between approximately 20 per cent and 80 per cent of the limits, transform responses of the selected doses to $y = \ln\left(\frac{u-\delta}{\alpha-u}\right)$ and use the parallel line model (Section 3.2) for the analysis; 2) select a range of doses for which the responses (u) or suitably transformed responses, for example ln u, are approximately linear when plotted against ln(dose); the parallel line model (Section 3.2) may then be used for analysis.

4. ASSAYS DEPENDING UPON QUANTAL RESPONSES

4.1. INTRODUCTION

In certain assays it is impossible or excessively laborious to measure the effect on each experimental unit on a quantitative scale. Instead, an effect such as death or hypoglycaemic symptoms may be observed as either occurring or not occurring in each unit, and the result depends on the number of units in which it occurs. Such assays are called quantal or all-or-none.

The situation is very similar to that described for quantitative assays in Section 3.1, but in place of n separate responses to each treatment a single value is recorded, i.e. the fraction of units in each treatment group showing a response. When these fractions are plotted against the logarithms of the doses the resulting curve will tend to be sigmoid (S-shaped) rather than linear. A mathematical function that represents this sigmoid curvature is used to estimate the dose-response curve.

The most commonly used function is the cumulative normal distribution function. This function has some theoretical merit, and is perhaps the best choice if the response is a reflection of the tolerance of the units. If the response is more likely to depend upon a process of growth, the logistic distribution model is preferred, although the difference in outcome between the 2 models is usually very small.

The maximum likelihood estimators of the slope and location of the curves can be found only by applying an iterative procedure. There are many procedures which lead to the same outcome, but they differ in efficiency due to the speed of convergence. One of the most rapid methods is direct optimisation of the maximum-likelihood function (see Section 7.1), which can easily be performed with computer programs having a built-in procedure for this purpose. Unfortunately, most of these procedures do not yield an estimate of the confidence interval, and the technique to obtain it is too complicated to describe here. The technique described below is not the most rapid, but has been chosen for its simplicity compared to the alternatives. It can be used for assays in which one or more test preparations are compared to a standard. Furthermore, the following conditions must be fulfilled:

1) the relationship between the logarithm of the dose and the response can be represented by a cumulative normal distribution curve,

2) the curves for the standard and the test preparation are parallel, i.e. they are identically shaped and may only differ in their horizontal location,

3) in theory, there is no natural response to extremely low doses and no natural non-response to extremely high doses.

4.2. THE PROBIT METHOD

The sigmoid curve can be made linear by replacing each response, i.e. the fraction of positive responses per group, by the corresponding value of the cumulative standard normal distribution. This value, often referred to as "normit", ranges theoretically from $-\infty$ to $+\infty$. In the past it was proposed to add 5 to each normit to obtain "probits". This facilitated the hand-performed calculations because negative values were avoided. With the arrival of computers the need to add 5 to the normits has disappeared. The term "normit method" would therefore be better for the method described below. However, since the term "probit analysis" is so widely spread, the term will, for historical reasons, be maintained in this text.

Once the responses have been linearised, it should be possible to apply the parallel-line analysis as described in Section 3.2. Unfortunately, the validity condition of homogeneity of variance for each dose is not fulfilled. The variance is minimal at normit = 0 and increases for positive and negative values of the normit. It is therefore necessary to give more weight to responses in the middle part of the curve, and less weight to the more extreme parts of the curve. This method, the analysis of variance, and the estimation of the potency and confidence interval are described below.

4.2.1. TABULATION OF THE RESULTS

Table 4.2.1.-I is used to enter the data into the columns indicated by numbers:

(1) the dose of the standard or the test preparation,

(2) the number n of units submitted to that treatment,

(3) the number of units r giving a positive response to the treatment,

(4) the logarithm x of the dose,

(5) the fraction $p = r/n$ of positive responses per group.

The first cycle starts here.

(6) column Y is filled with zeros at the first iteration,

(7) the corresponding value $\Phi = \Phi(Y)$ of the cumulative standard normal distribution function (see also Table 8.4).

The columns (8) to (10) are calculated with the following formulae:

(8) $$Z = \frac{e^{-Y^2/2}}{\sqrt{2\pi}} \qquad (4.2.1.\text{-}1)$$

(9) $$y = Y + \frac{p - \Phi}{Z} \qquad (4.2.1.\text{-}2)$$

(10) $$w = \frac{nZ^2}{\Phi - \Phi^2} \qquad (4.2.1.\text{-}3)$$

The columns (11) to (15) can easily be calculated from columns (4), (9) and (10) as wx, wy, wx^2, wy^2 and wxy respectively, and the sum (Σ) of each of the columns (10) to (15) is calculated separately for each of the preparations.

The sums calculated in Table 4.2.1.-I are transferred to columns (1) to (6) of Table 4.2.1.-II and 6 additional columns (7) to (12) are calculated as follows:

(7) $$S_{xx} = \sum wx^2 - \frac{(\sum wx)^2}{\sum w} \qquad (4.2.1.\text{-}4)$$

(8) $$S_{xy} = \sum wxy - \frac{(\sum wx)(\sum wy)}{\sum w} \qquad (4.2.1.\text{-}5)$$

(9) $$S_{yy} = \sum wy^2 - \frac{(\sum wy)^2}{\sum w} \qquad (4.2.1.\text{-}6)$$

(10) $$\overline{x} = \frac{\sum wx}{\sum w} \qquad (4.2.1.\text{-}7)$$

(11) $$\overline{y} = \frac{\sum wy}{\sum w} \qquad (4.2.1.\text{-}8)$$

Table 4.2.1.-I. – *First working table*

	(1)	(2)	(3)	(4)	(5)	(6)	(7)	(8)	(9)	(10)	(11)	(12)	(13)	(14)	(15)
	dose	n	r	x	p	Y	Φ	Z	y	w	wx	wy	wx^2	wy^2	wxy
S	.	.	.	.	.	.	.	.	.	.	.	.	.	.	.
	.	.	.	.	.	.	.	.	.	.	.	.	.	.	.
	.	.	.	.	.	.	.	.	.	.	.	.	.	.	.
										Σ =	Σ =	Σ =	Σ =	Σ =	Σ =
T	.	.	.	.	.	.	.	.	.	.	.	.	.	.	.
	.	.	.	.	.	.	.	.	.	.	.	.	.	.	.
	.	.	.	.	.	.	.	.	.	.	.	.	.	.	.
										Σ =	Σ =	Σ =	Σ =	Σ =	Σ =
etc.															

Table 4.2.1.-II. – *Second working table*

	(1) Σw	(2) Σwx	(3) Σwy	(4) Σwx^2	(5) Σwy^2	(6) Σwxy	(7) S_{xx}	(8) S_{xy}	(9) S_{yy}	(10) $\overline{x}$	(11) $\overline{y}$	(12) a
S	.	.	.	.	.	.	.	.	.	.	.	.
T	.	.	.	.	.	.	.	.	.	.	.	.
etc.	.	.	.	.	.	.	.	.	.	.	.	.
							Σ =	Σ =				

The common slope b can now be obtained as:

$$b = \frac{\sum S_{xy}}{\sum S_{xx}} \qquad (4.2.1.\text{-}9)$$

and the intercept a of the standard, and similarly for the test preparations is obtained as:

(12) $$a = \overline{y} - b\overline{x} \qquad (4.2.1.\text{-}10)$$

Column (6) of the first working table can now be replaced by $Y = a + bx$ and the cycle is repeated until the difference between 2 cycles has become small (e.g. the maximum difference of Y between 2 consecutive cycles is smaller than 10^{-8}).

4.2.2. TESTS OF VALIDITY

Before calculating the potencies and confidence intervals, validity of the assay must be assessed. If at least 3 doses for each preparation have been included, the deviations from linearity can be measured as follows: add a 13th column to Table 4.2.1.-II and fill it with:

$$S_{yy} - \frac{S_{xy}^2}{S_{xx}} \qquad (4.2.2.\text{-}1)$$

The column total is a measure of deviations from linearity and is approximately χ^2 distributed with degrees of freedom equal to $N - 2h$. Significance of this value may be assessed with the aid of Table 8.3 or a suitable sub-routine in a computer program. If the value is significant at the 0.05 probability level, the assay must probably be rejected (see Section 4.2.4).

When the above test gives no indication of significant deviations from linear regression, the deviations from parallelism are tested at the 0.05 significance level with:

$$\chi^2 = \sum \frac{S_{xy}^2}{S_{xx}} - \frac{\left(\sum S_{xy}\right)^2}{\sum S_{xx}} \qquad (4.2.2.\text{-}2)$$

with $h - 1$ degrees of freedom.

4.2.3. ESTIMATION OF POTENCY AND CONFIDENCE LIMITS

When there are no indications for a significant departure from parallelism and linearity the ln(potency ratio) M'_T is calculated as:

$$M'_T = \frac{a_T - a_S}{b} \qquad (4.2.3.\text{-}1)$$

and the antilogarithm is taken. Now let $t = 1.96$ and $s = 1$. Confidence limits are calculated as the antilogarithms of:

$$CM'_T - (C-1)(\overline{x}_S - \overline{x}_T) \pm \sqrt{(C-1)\left(V \sum S_{xx} + C\left(M'_T - \overline{x}_S + \overline{x}_T\right)^2\right)} \qquad (4.2.3.\text{-}2)$$

where $C = \dfrac{b^2 \sum S_{xx}}{b^2 \sum S_{xx} - s^2 t^2}$ and $V = \dfrac{1}{\sum\limits_S w} + \dfrac{1}{\sum\limits_T w}$

4.2.4. INVALID ASSAYS

If the test for deviations from linearity described in Section 4.2.2 is significant, the assay should normally be rejected. If there are reasons to retain the assay, the formulae are slightly modified. t becomes the t-value ($p = 0.05$) with the same number of degrees of freedom as used in the check for linearity and s^2 becomes the χ^2 value divided by the same number of degrees of freedom (and thus typically is greater than 1).

The test for parallelism is also slightly modified. The χ^2 value for non-parallelism is divided by its number of degrees of freedom. The resulting value is divided by s^2 calculated above to obtain an F-ratio with h - 1 and N - $2h$ degrees of freedom, which is evaluated in the usual way at the 0.05 significance level.

4.3. THE LOGIT METHOD

As indicated in Section 4.1 the logit method may sometimes be more appropriate. The name of the method is derived from the logit function which is the inverse of the logistic distribution. The procedure is similar to that described for the probit method with the following modifications in the formulae for Φ and Z.

$$\Phi = \frac{1}{1 + e^{-Y}} \qquad (4.3.\text{-}1)$$

$$Z = \frac{e^{-Y}}{\left(1 + e^{-Y}\right)^2} \qquad (4.3.\text{-}2)$$

4.4. OTHER SHAPES OF THE CURVE

The probit and logit method are almost always adequate for the analysis of quantal responses called for in the European Pharmacopoeia. However, if it can be made evident that the ln(dose)-response curve has another shape than the 2 curves described above, another curve Φ may be adopted. Z is then taken to be the first derivative of Φ.

For example, if it can be shown that the curve is not symmetric, the Gompertz distribution may be appropriate (the gompit method) in which case $\Phi = 1 - e^{-e^Y}$ and $Z = e^{Y - e^Y}$.

4.5. THE MEDIAN EFFECTIVE DOSE

In some types of assay it is desirable to determine a median effective dose which is the dose that produces a response in 50 per cent of the units. The probit method can be used to determine this median effective dose (ED_{50}), but since there is no need to express this dose relative to a standard, the formulae are slightly different.

Note: a standard can optionally be included in order to validate the assay. Usually the assay is considered valid if the calculated ED_{50} of the standard is close enough to the assigned ED_{50}. What "close enough" in this context means depends on the requirements specified in the monograph.

The tabulation of the responses to the test samples, and optionally a standard, is as described in Section 4.2.1. The test for linearity is as described in Section 4.2.2. A test for parallelism is not necessary for this type of assay. The ED_{50} of test sample T, and similarly for the other samples, is obtained as described in Section 4.2.3, with the following modifications in formulae 4.2.3.-1 and 4.2.3.-2).

$$M'_T = \frac{-a_T}{b} \qquad (4.5.\text{-}1)$$

$$CM'_T-(C-1)\overline{x}_T \pm \sqrt{(C-1)\left(V\sum S_{xx}+C\left(M'_T-\overline{x}_T\right)^2\right)} \qquad (4.5.\text{-}2)$$

where $V = \frac{1}{\sum_T w}$ and C is left unchanged

5. EXAMPLES

This section consists of worked examples illustrating the application of the formulae. The examples have been selected primarily to illustrate the statistical method of calculation. They are not intended to reflect the most suitable method of assay, if alternatives are permitted in the individual monographs. To increase their value as program checks, more decimal places are given than would usually be necessary. It should also be noted that other, but equivalent methods of calculation exist. These methods should lead to exactly the same final results as those given in the examples.

5.1. PARALLEL-LINE MODEL

5.1.1. TWO-DOSE MULTIPLE ASSAY WITH COMPLETELY RANDOMISED DESIGN

An assay of corticotrophin by subcutaneous injection in rats

The standard preparation is administered at 0.25 and 1.0 units per 100 g of body mass. 2 preparations to be examined are both assumed to have a potency of 1 unit per milligram and they are administered in the same quantities as the standard. The individual responses and means per treatment are given in Table 5.1.1.-I. A graphical presentation (Figure 5.1.1.-I) gives no rise to doubt the homogeneity of variance and normality of the data, but suggests problems with parallelism for preparation *U*.

Table 5.1.1.-I. – *Response metameter y: mass of ascorbic acid (mg) per 100 g of adrenal gland*

	Standard *S*		Preparation *T*		Preparation *U*	
	S_1	S_2	T_1	T_2	U_1	U_2
	300	289	310	230	250	236
	310	221	290	210	268	213
	330	267	360	280	273	283
	290	236	341	261	240	269
	364	250	321	241	307	251
	328	231	370	290	270	294
	390	229	303	223	317	223
	360	269	334	254	312	250
	342	233	295	216	320	216
	306	259	315	235	265	265
Mean	332.0	248.4	323.9	244.0	282.2	250.0

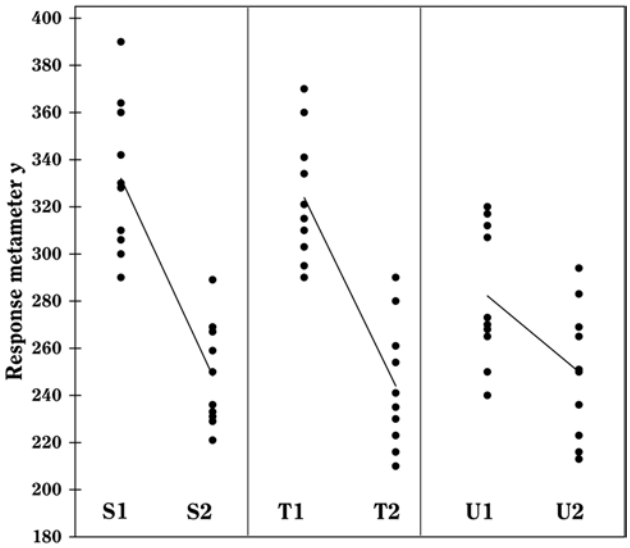

Figure 5.1.1.-I.

The formulae in Tables 3.2.3.-I and 3.2.3.-II lead to:

$P_S = 580.4$ $\quad L_S = -41.8$

$P_T = 567.9$ $\quad L_T = -39.95$

$P_U = 532.2$ $\quad L_U = -16.1$

$H_P = \frac{10}{2} = 5$ $\quad H_L = \frac{120}{6} = 20$

The analysis of variance can now be completed with the formulae in Tables 3.2.3-III and 3.2.3.-IV. This is shown in Table 5.1.1.-II.

Table 5.1.1.-II. – *Analysis of variance*

Source of variation	Degrees of freedom	Sum of squares	Mean square	*F*-ratio	Probability
Preparations	2	6256.6	3128.3		
Regression	1	63 830.8	63 830.8	83.38	0.000
Non-parallelism	2	8218.2	4109.1	5.37	0.007
Treatments	5	78 305.7			
Residual error	54	41 340.9	765.57		
Total	59	119 646.6			

The analysis confirms a highly significant linear regression. Departure from parallelism, however, is also significant (p = 0.0075) which was to be expected from the graphical observation that preparation *U* is not parallel to the standard. This preparation is therefore rejected and the analysis repeated using only preparation *T* and the standard (Table 5.1.1.-III).

Table 5.1.1.-III. – *Analysis of variance without sample U*

Source of variation	Degrees of freedom	Sum of squares	Mean square	*F*-ratio	Probability
Preparations	1	390.6	390.6		
Regression	1	66 830.6	66 830.6	90.5	0.000
Non-parallelism	1	34.2	34.2	0.05	0.831
Treatments	3	67 255.5			
Residual error	36	26 587.3	738.54		
Total	39	93 842.8			

The analysis without preparation *U* results in compliance with the requirements with respect to both regression and parallelism and so the potency can be calculated. The formulae in Section 3.2.5 give:

– for the common slope:

$$b = \frac{20\,(-41.8 - 39.95)}{\ln 4 \times 10 \times 2} = -58.970$$

– the ln(potency ratio) is:

$$M'_T = \frac{567.9 - 580.4}{2 \times (-58.970)} = 0.1060$$

$$C = \frac{66\,830.6}{66\,830.6 - 738.54 \times 2.028^2} = 1.0476$$

$$V = \frac{66\,830.6}{(-58.970)^2 \times 2 \times 10} = 0.9609$$

– and ln(confidence limits) are:

$$1.0476 \times 0.1060 \pm \sqrt{0.0476 \times (1.0476 \times 0.1060^2 + 2 \times 0.9609)}$$
$$= 0.1110 \pm 0.3034$$

By taking the antilogarithms we find a potency ratio of 1.11 with 95 per cent confidence limits from 0.82-1.51.

Multiplying by the assumed potency of preparation *T* yields a potency of 1.11 units/mg with 95 per cent confidence limits from 0.82 to 1.51 units/mg.

5.1.2. THREE-DOSE LATIN SQUARE DESIGN

Antibiotic agar diffusion assay using a rectangular tray

The standard has an assigned potency of 4855 IU/mg. The test preparation has an assumed potency of 5600 IU/mg. For the stock solutions 25.2 mg of the standard is dissolved in 24.5 mL of solvent and 21.4 mg of the test preparation is dissolved in 23.95 mL of solvent. The final solutions are prepared by first diluting both stock solutions to 1/20 and further using a dilution ratio of 1.5.

A Latin square is generated with the method described in Section 8.6 (see Table 5.1.2.-I). The responses of this routine assay are shown in Table 5.1.2.-II (inhibition zones in mm × 10). The treatment mean values are shown in Table 5.1.2.-III. A graphical representation of the data (see Figure 5.1.2.-I) gives no rise to doubt the normality or homogeneity of variance of the data.

The formulae in Tables 3.2.3.-I and 3.2.3.-II lead to:

$P_S = 529.667$ $\quad L_S = 35.833$

$P_T = 526.333$ $\quad L_T = 39.333$

$H_P = \frac{6}{3} = 2$ $\quad H_L = \frac{72}{24} = 3$

The analysis of variance can now be completed with the formulae in Tables 3.2.3.-III and 3.2.3.-IV. The result is shown in Table 5.1.2.-IV.

The analysis shows significant differences between the rows. This indicates the increased precision achieved by using a Latin square design rather than a completely randomised design. A highly significant regression and no significant departure of the individual regression lines from parallelism and linearity confirms that the assay is satisfactory for potency calculations.

Table 5.1.2.-I. – *Distribution of treatments over the plate*

	1	2	3	4	5	6
1	S_1	T_1	T_2	S_3	S_2	T_3
2	T_1	T_3	S_1	S_2	T_2	S_3
3	T_2	S_3	S_2	S_1	T_3	T_1
4	S_3	S_2	T_3	T_1	S_1	T_2
5	S_2	T_2	S_3	T_3	T_1	S_1
6	T_3	S_1	T_1	T_2	S_3	S_2

Table 5.1.2.-II. – *Measured inhibition zones in mm × 10*

	1	2	3	4	5	6	Row mean
1	161	160	178	187	171	194	175.2 = R_1
2	151	192	150	172	170	192	171.2 = R_2
3	162	195	174	161	193	151	172.7 = R_3
4	194	184	199	160	163	171	178.5 = R_4
5	176	181	201	202	154	151	177.5 = R_5
6	193	166	161	186	198	182	181.0 = R_6
Col. Mean =	172.8 = C_1	179.7 = C_2	177.2 = C_3	178.0 = C_4	174.8 = C_5	173.5 = C_6	

Table 5.1.2.-III. – *Means of the treatments*

	Standard *S*			**Preparation *T***		
	S_1	S_2	S_3	T_1	T_2	T_3
Mean	158.67	176.50	194.50	156.17	174.67	195.50

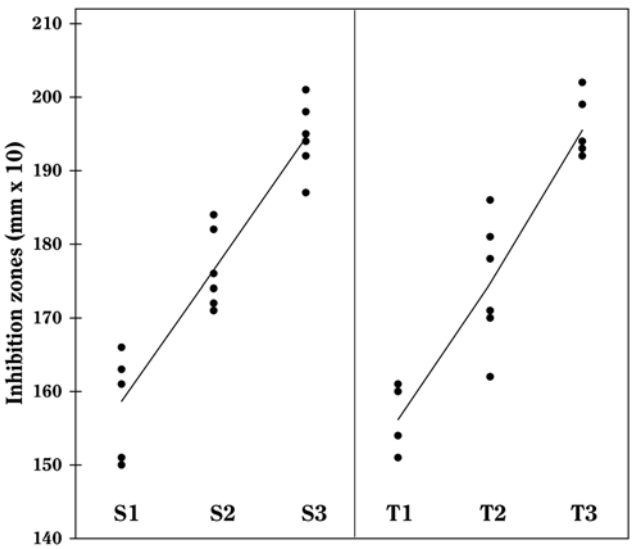

Figure 5.1.2.-I.

Table 5.1.2.-IV. – *Analysis of variance*

Source of variation	Degrees of freedom	Sum of squares	Mean square	*F*-ratio	Probability
Preparations	1	11.1111	11.1111		
Regression	1	8475.0417	8475.0417	408.1	0.000
Non-parallelism	1	18.3750	18.3750	0.885	0.358
Non-linearity	2	5.4722	2.7361	0.132	0.877
Treatments	5	8510			
Rows	5	412	82.40	3.968	0.012
Columns	5	218.6667	43.73	2.106	0.107
Residual error	20	415.3333	20.7667		
Total	35	9556			

The formulae in Section 3.2.5 give:

– for the common slope:

$$b = \frac{3 \times (35.833 + 39.333)}{\ln(1.5) \times 6 \times 2} = 46.346$$

– the ln(potency ratio) is:

$$M'_T = \frac{526.333 - 529.667}{3 \times 46.346} = -0.023974$$

$$C = \frac{8475.0417}{8475.0417 - 20.7667 \times 2.086^2} = 1.0108$$

$$V = \frac{8475.0417}{46.346^2 \times 3 \times 6} = 0.2192$$

– and ln(confidence limits) are:

$$1.0108 \times (-0.0240) \pm \sqrt{0.0108 \times (1.0108 \times (-0.0240)^2 + 2 \times 0.2192)} = -0.02423 \pm 0.06878$$

The potency ratio is found by taking the antilogarithms, resulting in 0.9763 with 95 per cent confidence limits from 0.9112-1.0456.

A correction factor of $\frac{4855 \times 25.2/24.5}{5600 \times 21.4/23.95} = 0.99799$ is necessary because the dilutions were not exactly equipotent on the basis of the assumed potency. Multiplying by this correction factor and the assumed potency of 5600 IU/mg yields a potency of 5456 IU/mg with 95 per cent confidence limits from 5092 to 5843 IU/mg.

5.1.3. FOUR-DOSE RANDOMISED BLOCK DESIGN

Antibiotic turbidimetric assay

This assay is designed to assign a potency in international units per vial. The standard has an assigned potency of 670 IU/mg. The test preparation has an assumed potency of 20 000 IU/vial. On the basis of this information the stock solutions are prepared as follows. 16.7 mg of the standard is dissolved in 25 mL solvent and the contents of one vial of the test preparation are dissolved in 40 mL solvent. The final solutions are prepared by first diluting to 1/40 and further using a dilution ratio of 1.5. The tubes are placed in a water-bath in a randomised block arrangement (see Section 8.5). The responses are listed in Table 5.1.3.-I.

Inspection of Figure 5.1.3.-I gives no rise to doubt the validity of the assumptions of normality and homogeneity of variance of the data. The standard deviation of S_3 is somewhat high but is no reason for concern.

Table 5.1.3.-I. – *Absorbances of the suspensions (× 1000)*

	Standard *S*				Preparation *T*				
Block	S_1	S_2	S_3	S_4	T_1	T_2	T_3	T_4	Mean
1	252	207	168	113	242	206	146	115	181.1
2	249	201	187	107	236	197	153	102	179.0
3	247	193	162	111	246	197	148	104	176.0
4	250	207	155	108	231	191	159	106	175.9
5	235	207	140	98	232	186	146	95	167.4
Mean	246.6	203.0	162.4	107.4	237.4	195.4	150.4	104.4	

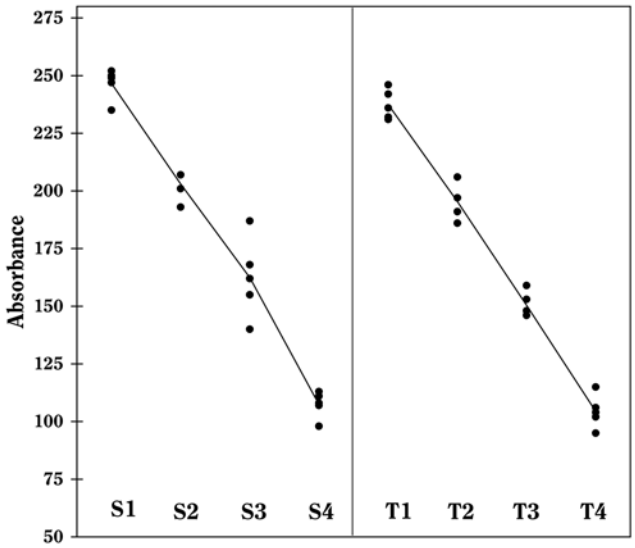

Figure 5.1.3.-I.

The formulae in Tables 3.2.3.-I and 3.2.3.-II lead to:

$P_S = 719.4$ $\quad L_S = -229.1$

$P_T = 687.6$ $\quad L_T = -222$

$H_P = \frac{5}{4} = 1.25$ $\quad H_L = \frac{60}{60} = 1$

The analysis of variance is constructed with the formulae in Tables 3.2.3.-III and 3.2.3.-IV. The result is shown in Table 5.1.3.-II.

Table 5.1.3.-II. – *Analysis of variance*

Source of variation	Degrees of freedom	Sum of squares	Mean square	*F*-ratio	Probability
Preparations	1	632.025	632.025		
Regression	1	101 745.6	101 745.6	1887.1	0.000
Non-parallelism	1	25.205	25.205	0.467	0.500
Non-linearity	4	259.14	64.785	1.202	0.332
Treatments	7	102 662			
Blocks	4	876.75	219.188	4.065	0.010
Residual error	28	1509.65	53.916		
Total	39	105 048.4			

A significant difference is found between the blocks. This indicates the increased precision achieved by using a randomised block design. A highly significant regression and no significant departure from parallelism and linearity confirms that the assay is satisfactory for potency calculations. The formulae in Section 3.2.5 give:

– for the common slope:

$$b = \frac{1 \times (-229.1 - 222)}{\ln(1.5) \times 5 \times 2} = -111.255$$

– the ln(potency ratio) is:

$$M'_T = \frac{687.6 - 719.4}{4 \times (-111.255)} = 0.071457$$

$$C = \frac{101\,745.6}{101\,745.6 - 53.916 \times 2.048^2} = 1.00223$$

$$V = \frac{101\,745.6}{(-111.255)^2 \times 4 \times 5} = 0.4110$$

– and ln(confidence limits) are:

$$1.00223 \times 0.0715 \pm \sqrt{0.00223 \times (1.00223 \times 0.0715^2 + 2 \times 0.4110)}$$
$$= 0.07162 \pm 0.04293$$

The potency ratio is found by taking the antilogarithms, resulting in 1.0741 with 95 per cent confidence limits from 1.0291 to 1.1214. A correction factor of $\frac{670 \times 16.7/25}{20\,000 \times 1/40} = 0.89512$ is necessary because the dilutions were not exactly equipotent on the basis of the assumed potency. Multiplying by this correction factor and the assumed potency of 20 000 IU/vial yields a potency of 19 228 IU/vial with 95 per cent confidence limits from 18 423-20 075 IU/vial.

5.1.4. FIVE-DOSE MULTIPLE ASSAY WITH COMPLETELY RANDOMISED DESIGN

An in-vitro assay of three hepatitis B vaccines against a standard

3 independent two-fold dilution series of 5 dilutions were prepared from each of the vaccines. After some additional steps in the assay procedure, absorbances were measured. They are shown in Table 5.1.4.-I.

Table 5.1.4.-I. – *Optical densities*

Dilution	Standard *S*			Preparation *T*		
1:16 000	0.043	0.045	0.051	0.097	0.097	0.094
1:8000	0.093	0.099	0.082	0.167	0.157	0.178
1:4000	0.159	0.154	0.166	0.327	0.355	0.345
1:2000	0.283	0.295	0.362	0.501	0.665	0.576
1:1000	0.514	0.531	0.545	1.140	1.386	1.051

Dilution	Preparation *U*			Preparation *V*		
1:16 000	0.086	0.071	0.073	0.082	0.082	0.086
1:8000	0.127	0.146	0.133	0.145	0.144	0.173
1:4000	0.277	0.268	0.269	0.318	0.306	0.316
1:2000	0.586	0.489	0.546	0.552	0.551	0.624
1:1000	0.957	0.866	1.045	1.037	1.039	1.068

The logarithms of the optical densities are known to have a linear relationship with the logarithms of the doses. The mean responses of the ln-transformed optical densities are listed in Table 5.1.4.-II. No unusual features are discovered in a graphical presentation of the data (Figure 5.1.4.-I).

Table 5.1.4.-II. – *Means of the ln-transformed absorbances*

S_1	– 3.075	T_1	– 2.344	U_1	– 2.572	V_1	– 2.485
S_2	– 2.396	T_2	– 1.789	U_2	– 2.002	V_2	– 1.874
S_3	– 1.835	T_3	– 1.073	U_3	– 1.305	V_3	– 1.161
S_4	– 1.166	T_4	– 0.550	U_4	– 0.618	V_4	– 0.554
S_5	– 0.635	T_5	0.169	U_5	– 0.048	V_5	0.047

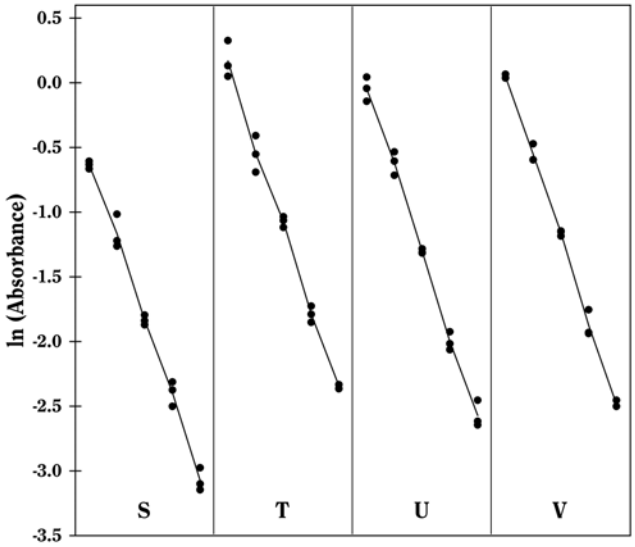

Figure 5.1.4.-I.

The formulae in Tables 3.2.3.-I and 3.2.3.-II give:

P_S	=	– 9.108	L_S	=	6.109
P_T	=	– 5.586	L_T	=	6.264
P_U	=	– 6.544	L_U	=	6.431
P_V	=	– 6.027	L_V	=	6.384
H_P	=	$\frac{3}{5} = 0.6$	H_L	=	$\frac{36}{120} = 0.3$

The analysis of variance is completed with the formulae in Tables 3.2.3.-III and 3.2.3.-IV. This is shown in Table 5.1.4.-III.

Table 5.1.4.-III. – *Analysis of variance*

Source of variation	Degrees of freedom	Sum of squares	Mean square	*F*-ratio	Probability
Preparations	3	4.475	1.492		
Regression	1	47.58	47.58	7126	0.000
Non-parallelism	3	0.0187	0.006	0.933	0.434
Non-linearity	12	0.0742	0.006	0.926	0.531
Treatments	19	52.152			
Residual error	40	0.267	0.0067		
Total	59	52.42			

A highly significant regression and a non-significant departure from parallelism and linearity confirm that the potencies can be safely calculated. The formulae in Section 3.2.5 give:

– for the common slope:

$$b = \frac{0.3 \times (6.109 + 6.264 + 6.431 + 6.384)}{\ln 2 \times 3 \times 4} = 0.90848$$

– the ln(potency ratio) for preparation *T* is:

$$M'_T = \frac{-5.586 - (-9.108)}{5 \times 0.90848} = 0.7752$$

$$C = \frac{47.58}{47.58 - 0.0067 \times 2.021^2} = 1.00057$$

$$V = \frac{47.58}{0.9085^2 \times 5 \times 3} = 3.8436$$

– and ln(confidence limits) for preparation *T* are:

$$1.00057 \times 0.7752 \pm \sqrt{0.00057 \times (1.00057 \times 0.7752^2 + 2 \times 3.8436)}$$
$$= 0.7756 \pm 0.0689$$

By taking the antilogarithms a potency ratio of 2.171 is found with 95 per cent confidence limits from 2.027 to 2.327. All samples have an assigned potency of 20 µg protein/mL and so a potency of 43.4 µg protein/mL is found for test preparation *T* with 95 per cent confidence limits from 40.5-46.5 µg protein/mL.

The same procedure is followed to estimate the potency and confidence interval of the other test preparations. The results are listed in Table 5.1.4.-IV.

Table 5.1.4.-IV. – *Final potency estimates and 95 per cent confidence intervals of the test vaccines (in µg protein/mL)*

	Lower limit	Estimate	Upper limit
Vaccine *T*	40.5	43.4	46.5
Vaccine *U*	32.9	35.2	37.6
Vaccine *V*	36.8	39.4	42.2

5.1.5. TWIN CROSS-OVER DESIGN

Assay of insulin by subcutaneous injection in rabbits

The standard preparation was administered at 1 unit and 2 units per millilitre. Equivalent doses of the unknown preparation were used based on an assumed potency of 40 units per millilitre. The rabbits received subcutaneously 0.5 mL of the appropriate solutions according to the design in Table 5.1.5.-I and responses obtained are shown in Table 5.1.5.-II and Figure 5.1.5.-I. The large variance illustrates the variation between rabbits and the need to employ a cross-over design.

Table 5.1.5.-I. – *Arrangements of treatments*

	Group of rabbits			
	1	**2**	**3**	**4**
Day 1	S_1	S_2	T_1	T_2
Day 2	T_2	T_1	S_2	S_1

Table 5.1.5.-II. – *Response y: sum of blood glucose readings (mg/100 mL) at 1 hour and $2\frac{1}{2}$ hours*

	Group 1		Group 2		Group 3		Group 4	
	S_1	T_2	S_2	T_1	T_1	S_2	T_2	S_1
	112	104	65	72	105	91	118	144
	126	112	116	160	83	67	119	149
	62	58	73	72	125	67	42	51
	86	63	47	93	56	45	64	107
	52	53	88	113	92	84	93	117
	110	113	63	71	101	56	73	128
	116	91	50	65	66	55	39	87
	101	68	55	100	91	68	31	71
Mean	95.6	82.8	69.6	93.3	89.9	66.6	72.4	106.8

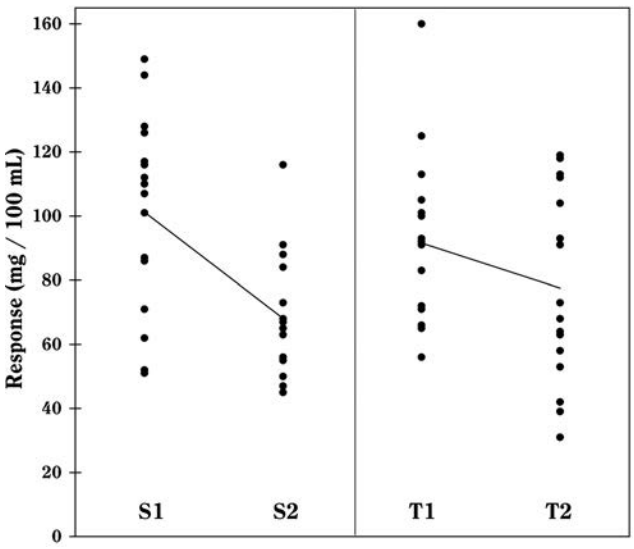

Figure 5.1.5.-I.

The analysis of variance is more complicated for this assay than for the other designs given because the component of the sum of squares due to parallelism is not independent of the component due to rabbit differences. Testing of the parallelism of the regression lines involves a second error-mean-square term obtained by subtracting the parallelism component and 2 "interaction" components from the component due to rabbit differences.

3 "interaction" components are present in the analysis of variance due to replication within each group:

days × preparation; days × regression; days × parallelism.

These terms indicate the tendency for the components (preparations, regression and parallelism) to vary from day to day. The corresponding *F*-ratios thus provide checks on these aspects of assay validity. If the values of *F* obtained are significantly high, care should be exercised in interpreting the results of the assay and, if possible, the assay should be repeated.

The analysis of variance is constructed by applying the formulae given in Tables 3.2.3.-I to 3.2.3.-III separately for both days and for the pooled set of data. The formulae in Tables 3.2.3.-I and 3.2.3.-II give:

Day 1: $P_S = 165.25$ $L_S = -13$

$P_T = 162.25$ $L_T = -8.75$

$H_P = \frac{8}{2} = 4$ $H_L = \frac{96}{6} = 16$

Day 2: $P_S = 173.38$ $L_S = -20.06$

$P_T = 176.00$ $L_T = -5.25$

$H_P = \frac{8}{2} = 4$ $H_L = \frac{96}{6} = 16$

Pooled: $P_S = 169.31$ $L_S = -16.53$

$P_T = 169.13$ $L_T = -7.00$

$H_P = \frac{16}{2} = 8$ $H_L = \frac{192}{6} = 32$

and with the formulae in Table 3.2.3.-III this leads to:

Day 1	Day 2	Pooled
$SS_{prep} = 18.000$	$SS_{prep} = 13.781$	$SS_{prep} = 0.141$
$SS_{reg} = 3784.5$	$SS_{reg} = 5125.8$	$SS_{reg} = 8859.5$
$SS_{par} = 144.5$	$SS_{par} = 1755.3$	$SS_{par} = 1453.5$

The interaction terms are found as Day 1 + Day 2 - Pooled.

$$SS_{\text{days}\times\text{prep}} = 31.64$$

$$SS_{\text{days}\times\text{reg}} = 50.77$$

$$SS_{\text{days}\times\text{par}} = 446.27$$

In addition the sum of squares due to day-to-day variation is calculated as:

$$SS_{\text{days}} = \frac{1}{2}N\left(D_1^2 + D_2^2\right) - K = 478.52$$

and the sum of squares due to blocks (the variation between rabbits) as:

$$SS_{\text{block}} = 2\sum B_i^2 - K = 39\ 794.7$$

where B_i is the mean response per rabbit.

The analysis of variance can now be completed as shown in Table 5.1.5.-III.

Table 5.1.5.-III. – *Analysis of variance*

Source of variation	Degrees of freedom	Sum of squares	Mean square	*F*-ratio	Proba-bility
Non-parallelism	1	1453.5	1453.5	1.064	0.311
Days × Prep.	1	31.6	31.6	0.023	0.880
Days × Regr.	1	50.8	50.8	0.037	0.849
Residual error between rabbits	28	38 258.8	1366.4		
Rabbits	31	39 794.7	1283.7		
Preparations	1	0.14	0.14	0.001	0.975
Regression	1	8859.5	8859.5	64.532	0.000
Days	1	478.5	478.5	3.485	0.072
Days × non-par.	1	446.3	446.3	3.251	0.082
Residual error within rabbits	28	3844.1	137.3		
Total	63	53 423.2			

The analysis of variance confirms that the data fulfil the necessary conditions for a satisfactory assay: a highly significant regression, no significant departures from parallelism, and none of the three interaction components is significant.

The formulae in Section 3.2.5 give:

– for the common slope:

$$b = \frac{32 \times (-16.53 - 7)}{\ln 2 \times 16 \times 2} = -33.95$$

– the ln(potency ratio) is:

$$M'_T = \frac{169.13 - 169.31}{2 \times (-33.95)} = 0.00276$$

$$C = \frac{8859.5}{8859.5 - 137.3 \times 2.048^2} = 1.0695$$

$$V = \frac{8859.5}{(-33.95)^2 \times 2 \times 16} = 0.2402$$

– and ln(confidence limits) are:

$$1.0695 \times 0.00276 \pm \sqrt{0.0695 \times (1.0695 \times 0.00276^2 + 2 \times 0.2402)}$$
$$= 0.00295 \pm 0.18279$$

By taking the antilogarithms a potency ratio of 1.003 with 95 per cent confidence limits from 0.835 to 1.204 is found. Multiplying by A_T = 40 yields a potency of 40.1 units per millilitre with 95 per cent confidence limits from 33.4-48.2 units per millilitre.

5.2. SLOPE-RATIO MODEL

5.2.1. A COMPLETELY RANDOMISED (0,3,3)-DESIGN

An assay of factor VIII

A laboratory carries out a chromogenic assay of factor VIII activity in concentrates. The laboratory has no experience with the type of assay but is trying to make it operational. 3 equivalent dilutions are prepared of both the standard and the test preparation. In addition a blank is prepared, although a linear dose-response relationship is not expected for low doses. 8 replicates of each dilution are prepared, which is more than would be done in a routine assay.

A graphical presentation of the data shows clearly that the dose-response relationship is indeed not linear at low doses. The responses to blanks will therefore not be used in the calculations (further assays are of course needed to justify this decision). The formulae in Tables 3.3.3.1.-I and 3.3.3.1.-II yield

P_S = 0.6524 P_T = 0.5651

L_S = 1.4693 L_T = 1.2656

a_S = 0.318 a_T = 0.318

b_S = 0.329 b_T = 0.271

G_S = 0.1554 G_T = 0.1156

J_S = $4.17 \cdot 10^{-8}$ J_T = $2.84 \cdot 10^{-6}$

and

H_1 = 0.09524 a' = 0.05298 K = 1.9764

and the analysis of variance is completed with the formulae in Tables 3.3.3.1.-III and 3.3.3.1.-IV.

A highly significant regression and no significant deviations from linearity and intersection indicate that the potency can be calculated.

Slope of standard:

$$b'_S = \frac{6 \times 1.469 - 36 \times 0.0530}{84} = 0.0822$$

Slope of test sample:

$$b'_T = \frac{6 \times 1.266 - 36 \times 0.0530}{84} = 0.0677$$

Formula 3.3.5.1.-3 gives:

$$R = \frac{0.0677}{0.0822} = 0.823$$

$$C = \frac{0.0822^2}{0.0822^2 - 3.86 \cdot 10^{-6} \times 2.018^2 \times 0.0357} = 1.000083$$

$$K' = 0.000083 \times 0.75 = 0.000062$$

and the 95 per cent confidence limits are:

$$0.823 \pm \sqrt{0.000083 \times 1.678 + 0.000062 \times (-1.646)}$$
$$= 0.823 \pm 0.006$$

The potency ratio is thus estimated as 0.823 with 95 per cent confidence limits from 0.817 to 0.829.

Table 5.2.1.-I. – *Absorbances*

	Blank	Standard *S* (in IU/mL)			Preparation *T* (in IU/mL)		
Conc.	*B*	S_1 0.01	S_2 0.02	S_3 0.03	T_1 0.01	T_2 0.02	T_3 0.03
	0.022	0.133	0.215	0.299	0.120	0.188	0.254
	0.024	0.133	0.215	0.299	0.119	0.188	0.253
	0.024	0.131	0.216	0.299	0.118	0.190	0.255
	0.026	0.136	0.218	0.297	0.120	0.190	0.258
	0.023	0.137	0.220	0.297	0.120	0.190	0.257
	0.022	0.136	0.220	0.305	0.121	0.191	0.257
	0.022	0.138	0.219	0.299	0.121	0.191	0.255
	0.023	0.137	0.218	0.302	0.121	0.190	0.254
Mean	0.0235	0.1351	0.2176	0.2996	0.1200	0.1898	0.2554

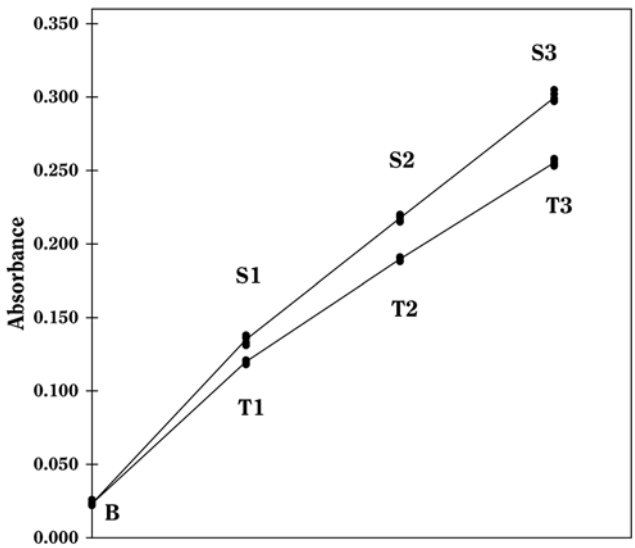

Figure 5.2.1.-I.

Table 5.2.1.-II. – *Analysis of variance*

Source of variation	Degrees of freedom	Sum of squares	Mean square	*F*-ratio	Probability
Regression	2	0.1917	0.0958	24 850	0.000
Intersection	1	$3 \cdot 10^{-9}$	$3 \cdot 10^{-9}$	$7 \cdot 10^{-4}$	0.978
Non-linearity	2	$2 \cdot 10^{-5}$	$1 \cdot 10^{-5}$	2.984	0.061
Treatments	5	0.1917			
Residual error	42	$1.62 \cdot 10^{-4}$	$3.86 \cdot 10^{-6}$		
Total	47	0.1919			

5.2.2. A COMPLETELY RANDOMISED (0,4,4,4)-DESIGN
An in-vitro assay of influenza vaccines

The haemagglutinin antigen (HA) content of 2 influenza vaccines is determined by single radial immunodiffusion. Both have a labelled potency of 15 µg HA per dose, which is equivalent with a content of 30 µg HA/mL. The standard has an assigned content of 39 µg HA/mL.

Standard and test vaccines are applied in 4 duplicate concentrations which are prepared on the basis of the assigned and the labelled contents. When the equilibrium between the external and the internal reactant is established, the zone of the annulus precipitation area is measured. The results are shown in Table 5.2.2.-I.

Table 5.2.2.-I. – *Zone of precipitation area (mm²)*

Conc.	Standard *S*		Preparation *T*		Preparation *U*	
(µg/mL)	I	II	I	II	I	II
7.5	18.0	18.0	15.1	16.8	15.4	15.7
15.0	22.8	24.5	23.1	24.2	20.2	18.6
22.5	30.4	30.4	28.9	27.4	24.2	23.1
30.0	35.7	36.6	34.4	37.8	27.4	27.0

A graphical presentation of the data shows no unusual features (see Figure 5.2.2.-I). The formulae in Tables 3.3.3.1.-I and 3.3.3.1.-II yield

P_S	=	108.2	P_T	=	103.85	P_U	=	85.8
L_S	=	301.1	L_T	=	292.1	L_U	=	234.1
a_S	=	141.0	a_T	=	116.7	a_U	=	139.8
b_S	=	61.2	b_T	=	64.95	b_U	=	39.2
G_S	=	3114.3	G_T	=	2909.4	G_U	=	1917.3
J_S	=	0.223	J_T	=	2.227	J_U	=	0.083

and

H_I	=	0.0093	a'	=	11.04	K	=	14 785.8

and the analysis of variance is completed with the formulae in Tables 3.3.3.1.-III and 3.3.3.1.-IV. This is shown in Table 5.2.2.-II.

A highly significant regression and no significant deviations from linearity and intersection indicate that the potency can be calculated.

Slope of standard:

$$b'_S = \frac{6 \times 301.1 - 60 \times 11.04}{180} = 6.356$$

Slope of *T* is:

$$b'_T = \frac{6 \times 292.1 - 60 \times 11.04}{180} = 6.056$$

Slope of *U* is:

$$b'_U = \frac{6 \times 234.1 - 60 \times 11.04}{180} = 4.123$$

This leads to a potency ratio of 6.056/6.356 = 0.953 for vaccine *T* and 4.123/6.356 = 0.649 for vaccine *U*.

$$C = \frac{6.356^2}{6.356^2 - 1.068 \times 2.179^2 \times 0.0444} = 1.0056$$

$$K' = 0.0056 \times 0.625 = 0.0035$$

And the confidence limits are found with formula 3.3.5.1.-4.

For vaccine *T*:

$$0.955 \pm \sqrt{0.0056 \times 1.913 + 0.0035 \times (-1.913)} = 0.955 \pm 0.063$$

For vaccine *U*:

$$0.649 \pm \sqrt{0.0056 \times 1.423 + 0.0035 \times (-1.301)} = 0.649 \pm 0.058$$

The HA content in µg/dose can be found by multiplying the potency ratios and confidence limits by the assumed content of 15 µg/dose. The results are given in Table 5.2.2.-III.

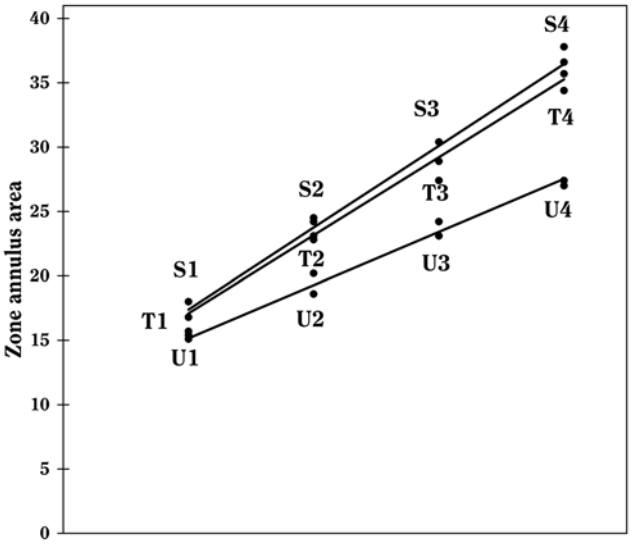

Figure 5.2.2.-I.

Table 5.2.2.-II. – *Analysis of variance*

Source of variation	Degrees of freedom	Sum of squares	Mean square	*F*-ratio	Proba-bility
Regression	3	1087.7	362.6	339.5	0.000
Intersection	2	3.474	1.737	1.626	0.237
Non-linearity	6	5.066	0.844	0.791	0.594
Treatments	11	1096.2			
Residual error	12	12.815	1.068		
Total	23	1109.0			

Table 5.2.2.-III. – *Estimates of HA content* (µg/dose)

	Lower limit	Estimate	Upper limit
Vaccine *T*	13.4	14.3	15.3
Vaccine *U*	8.9	9.7	10.6

5.3. QUANTAL RESPONSES

5.3.1. PROBIT ANALYSIS OF A TEST PREPARATION AGAINST A REFERENCE

An in-vivo assay of a diphtheria vaccine

A diphtheria vaccine (assumed potency 140 IU/vial) is assayed against a standard (assigned potency 132 IU/vial). On the basis of this information, equivalent doses are prepared and randomly administered to groups of guinea-pigs. After a given period, the animals are challenged with diphtheria toxin and the number of surviving animals recorded as shown in Table 5.3.1.-I.

Table 5.3.1.-I. – *Raw data from a diphtheria assay in guinea-pigs*

Standard (*S*) Assigned potency 132 IU/vial			**Test preparation (*T*) Assumed potency 140 IU/vial**		
dose (IU/mL)	chal-lenged	protected	dose (I.U./mL)	chal-lenged	protected
1.0	12	0	1.0	11	0
1.6	12	3	1.6	12	4
2.5	12	6	2.5	11	8
4.0	11	10	4.0	11	10

The observations are transferred to the first working table and the subsequent columns are computed as described in Section 4.2.1. Table 5.3.1.-II shows the first cycle of this procedure.

The sums of the last 6 columns are then calculated per preparation and transferred to the second working table (see Table 5.3.1.-III). The results in the other columns are found with formulae 4.2.1.-4 to 4.2.1.-10. This yields a common slope *b* of 1.655.

The values for *Y* in the first working table are now replaced by *a* + *bx* and a second cycle is carried out (see Table 5.3.1.-IV).

The cycle is repeated until the difference between 2 consecutive cycles has become small. The second working table should then appear as shown in Table 5.3.1.-V.

Linearity is tested as described in Section 4.2.2. The χ^2-value with 4 degrees of freedom is 0.851 + 1.070 = 1.921 representing a *p*-value of 0.750 which is not significant.

Since there are no significant deviations from linearity, the test for parallelism can be carried out as described in the same section. The χ^2-value with 1 degree of freedom is

$(16.71 + 17.27) - \frac{14.15^2}{5.89} = 0.001$ representing a *p*-value of 0.974 which is not significant.

The ln(potency ratio) can now be estimated as described in Section 4.2.3.

$$M'_T = \frac{-1.721 - (-2.050)}{2.401} = 0.137$$

Table 5.3.1.-II. – *First working table in the first cycle*

Vac-cine	Dose	*n*	*r*	*x*	*p*	*Y*	Φ	*Z*	*y*	*w*	*wx*	*wy*	wx^2	wy^2	*wxy*
S	1.0	12	0	0.000	0.000	0	0.5	0.399	– 1.253	7.64	0.00	– 9.57	0.00	12.00	0.00
	1.6	12	3	0.470	0.250	0	0.5	0.399	– 0.627	7.64	3.59	– 4.79	1.69	3.00	– 2.25
	2.5	12	6	0.916	0.500	0	0.5	0.399	0.000	7.64	7.00	0.00	6.41	0.00	0.00
	4.0	11	10	1.386	0.909	0	0.5	0.399	1.025	7.00	9.71	7.18	13.46	7.36	9.95
T	1.0	11	0	0.000	0.000	0	0.5	0.399	– 1.253	7.00	0.00	– 8.78	0.00	11.00	0.00
	1.6	12	4	0.470	0.333	0	0.5	0.399	– 0.418	7.64	3.59	– 3.19	1.69	1.33	– 1.50
	2.5	11	8	0.916	0.727	0	0.5	0.399	0.570	7.00	6.42	3.99	5.88	2.27	3.66
	4.0	11	10	1.386	0.909	0	0.5	0.399	1.025	7.00	9.71	7.18	13.46	7.36	9.95

Table 5.3.1.-III. – *Second working table in the first cycle*

Vaccine	Σw	Σwx	Σwy	Σwx^2	Σwy^2	Σwxy	S_{xx}	S_{xy}	S_{yy}	$\bar{x}$	$\bar{y}$	a
S	29.92	20.30	– 7.18	21.56	22.36	7.70	7.79	12.58	20.64	0.68	– 0.24	– 1.36
T	28.65	19.72	– 0.80	21.03	21.97	12.11	7.46	12.66	21.95	0.69	– 0.03	– 1.17

Table 5.3.1.-IV. – *First working table in the second cycle*

Vaccine	Dose	n	r	x	p	Y	Φ	Z	y	w	wx	wy	wx^2	wy^2	wxy
S	1.0	12	0	0.000	0.000	– 1.36	0.086	0.158	– 1.911	3.77	0.00	– 7.21	0.00	13.79	0.00
	1.6	12	3	0.470	0.250	– 0.58	0.279	0.336	– 0.672	6.74	3.17	– 4.53	1.49	3.04	– 2.13
	2.5	12	6	0.916	0.500	0.15	0.561	0.394	– 0.001	7.57	6.94	– 0.01	6.36	0.00	– 0.01
	4.0	11	10	1.386	0.909	0.93	0.824	0.258	1.260	5.07	7.03	6.39	9.75	8.05	8.86
T	1.0	11	0	0.000	0.000	– 1.17	0.122	0.202	– 1.769	4.20	0.00	– 7.43	0.00	13.14	0.00
	1.6	12	4	0.470	0.333	– 0.39	0.349	0.370	– 0.430	7.23	3.40	– 3.11	1.60	1.34	– 1.46
	2.5	11	8	0.916	0.727	0.35	0.637	0.375	0.591	6.70	6.14	3.96	5.62	2.34	3.63
	4.0	11	10	1.386	0.909	1.13	0.870	0.211	1.311	4.35	6.03	5.70	8.36	7.48	7.90

Table 5.3.1.-V. – *Second working table after sufficient cycles*

Vaccine	Σw	Σwx	Σwy	Σwx^2	Σwy^2	Σwxy	S_{xx}	S_{xy}	S_{yy}	$\bar{x}$	$\bar{y}$	a
S	18.37	14.80	– 2.14	14.85	17.81	5.28	2.93	7.00	17.56	0.81	– 0.12	– 2.05
T	17.96	12.64	– 0.55	11.86	18.35	6.76	2.96	7.15	18.34	0.70	– 0.03	– 1.72

Further:

$$C = \frac{2.401^2 \times 5.893}{2.401^2 \times 5.893 - 1^2 \times 1.960^2} = 1.127$$

$$V = \frac{1}{18.37} + \frac{1}{17.96} = 0.110$$

So ln confidence limits are:

$$0.155 - 0.013 \pm \sqrt{0.127\,(0.649 + 1.127 \times 0.036^2)} = 0.142 \pm 0.288$$

The potency and confidence limits can now be found by taking the antilogarithms and multiplying these by the assumed potency of 140 IU/vial. This yields an estimate of 160.6 IU/vial with 95 per cent confidence limits from 121.0-215.2 IU/vial.

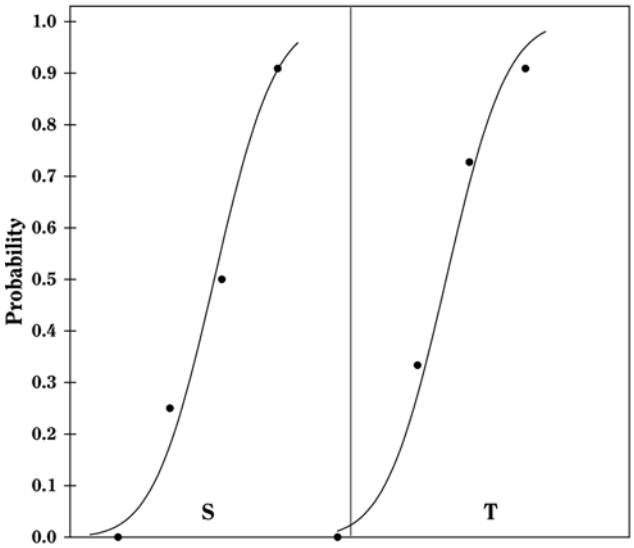

Figure 5.3.1.-I.

5.3.2. LOGIT ANALYSIS AND OTHER TYPES OF ANALYSES OF A TEST PREPARATION AGAINST A REFERENCE

Results will be given for the situation where the logit method and other "classical" methods of this family are applied to the data in Section 5.3.1. This should be regarded as an exercise rather than an alternative to the probit method in this specific case. Another shape of the curve may be adopted only if this is supported by experimental or theoretical evidence. See Table 5.3.2.-I.

Table 5.3.2.-I. – *Results by using alternative curves*

	Logit	Gompit	Angle*
Φ	$\frac{1}{1+e^{-Y}}$	$1 - e^{-e^{Y}}$	$\frac{1}{2}\sin\ Y + \frac{1}{2}$
Z	$\frac{e^{-Y}}{(1+e^{-Y})^2}$	$e^{Y-e^{Y}}$	$\frac{1}{2}\cos\ Y$
slope b	4.101	2.590	1.717
χ^2 lin	2.15	3.56	1.50
χ^2 par	0.0066	0.168	0.0010
Potency	162.9	158.3	155.8
Lower limit	121.1	118.7	122.6
Upper limit	221.1	213.3	200.7

$$* \begin{cases} \text{If } Y < -\frac{1}{2}\pi \text{ then } \Phi = 0 \text{ and } Z = 0 \\ \text{If } Y > \frac{1}{2}\pi \text{ then } \Phi = 1 \text{ and } Z = 0 \end{cases}$$

5.3.3. THE ED_{50} DETERMINATION OF A SUBSTANCE USING THE PROBIT METHOD

An in-vitro assay of oral poliomyelitis vaccine

In an ED_{50} assay of oral poliomyelitis vaccine with 10 different dilutions in 8 replicates of 50 µL on an ELISA-plate, results were obtained as shown in Table 5.3.3.-I.

The observations are transferred to the first working table and the subsequent columns are computed as described in Section 4.2.1. Table 5.3.3.-II shows the first cycle of this procedure.

Table 5.3.3.-I. – *Dilutions (10^x µL of the undiluted vaccine)*

−3.5	−4.0	−4.5	−5.0	−5.5	−6.0	−6.5	−7.0	−7.5	−8.0
+	+	+	+	−	−	−	−	−	−
+	+	+	+	−	−	−	−	−	−
+	+	−	−	−	−	−	−	−	−
+	+	+	+	−	−	−	−	−	−
+	+	+	−	−	−	−	−	−	−
+	+	+	+	+	−	−	−	−	−
+	+	+	+	+	−	+	−	−	−
+	+	+	+	−	+	−	−	−	−

The sums of the last 6 columns are calculated and transferred to the second working table (see Table 5.3.3.-III). The results in the other columns are found with formulae 4.2.1.-4 to 4.2.1.-10. This yields a common slope *b* of – 0.295.

The values for *Y* in the first working table are now replaced by *a* + *bx* and a second cycle is carried out. The cycle is repeated until the difference between 2 consecutive cycles has become small. The second working table should then appear as shown in Table 5.3.3.-IV.

Linearity is tested as described in Section 4.2.2. The χ^2-value with 8 degrees of freedom is 2.711 representing a *p*-value of 0.951 which is not significant.

The potency ratio can now be estimated as described in Section 4.5.

$$M'_T = \frac{-(-7.931)}{-0.646} = -12.273$$

Further:

$$C = \frac{(-0.646)^2 \times 55.883}{(-0.646)^2 \times 55.883 - 1^2 \times 1.960^2} = 1.197$$

$$V = \frac{1}{19.39} = 0.052$$

So ln confidence limits are:

$$-14.692-(-2.420)\pm\sqrt{0.197\times\left(2.882+1.197\times0.009^2\right)}$$
$$=-12.272\pm0.754$$

This estimate is still expressed in terms of the ln(dilutions). In order to obtain estimates expressed in $\ln(ED_{50})$/mL the values are transformed to $-M'_T+\ln\left(\frac{1000}{50}\right)$.

Since it has become common use to express the potency of this type of vaccine in terms of $\log_{10}(ED_{50})$/mL, the results have to be divided by ln(10). The potency is thus estimated as 6.63 $\log_{10}(ED_{50})$/mL with 95 per cent confidence limits from 6.30 to 6.96 $\log_{10}(ED_{50})$/mL.

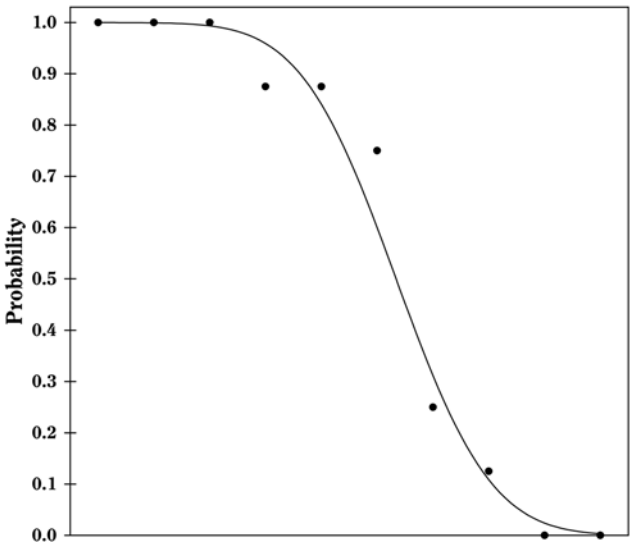

Figure 5.3.3.-I.

Table 5.3.3.-II. – *First working table in the first cycle*

Vaccine	Dose	*n*	*r*	*x*	*p*	*Y*	Φ	*Z*	*y*	*w*	*wx*	*wy*	wx^2	wy^2	*wxy*
T	$10^{-3.5}$	8	0	– 8.06	0.000	0.00	0.5	0.399	– 1.253	5.09	– 41.04	– 6.38	330.8	8.00	51.4
	$10^{-4.0}$	8	0	– 9.21	0.000	0.00	0.5	0.399	– 1.253	5.09	– 46.91	– 6.38	432.0	8.00	58.8
	$10^{-4.5}$	8	1	– 10.36	0.125	0.00	0.5	0.399	– 0.940	5.09	– 52.77	– 4.79	546.8	4.50	49.6
	$10^{-5.0}$	8	2	– 11.51	0.250	0.00	0.5	0.399	– 0.627	5.09	– 58.63	– 3.19	675.1	2.00	36.7
	$10^{-5.5}$	8	6	– 12.66	0.750	0.00	0.5	0.399	0.627	5.09	– 64.50	3.19	816.8	2.00	– 40.4
	$10^{-6.0}$	8	7	– 13.82	0.875	0.00	0.5	0.399	0.940	5.09	– 70.36	4.79	972.1	4.50	– 66.1
	$10^{-6.5}$	8	7	– 14.97	0.875	0.00	0.5	0.399	0.940	5.09	– 76.23	4.79	1140.8	4.50	– 71.7
	$10^{-7.0}$	8	8	– 16.12	1.000	0.00	0.5	0.399	1.253	5.09	– 82.09	6.38	1323.1	8.00	– 102.9
	$10^{-7.5}$	8	8	– 17.27	1.000	0.00	0.5	0.399	1.253	5.09	– 87.95	6.38	1518.9	8.00	– 110.2
	$10^{-8.0}$	8	8	– 18.42	1.000	0.00	0.5	0.399	1.253	5.09	– 93.82	6.38	1728.2	8.00	– 117.6

Table 5.3.3.-III. – *Second working table in the first cycle*

Vaccine	Σ*w*	Σ*wx*	Σ*wy*	Σwx^2	Σwy^2	Σ*wxy*	S_{xx}	S_{xy}	S_{yy}	$\bar{x}$	$\bar{y}$	*a*
T	50.93	– 674.3	11.17	9484.6	57.50	– 312.32	556.92	– 164.43	55.05	– 13.24	0.219	– 3.690

Table 5.3.3.-IV. – *Second working table after sufficient cycles*

Vaccine	Σ*w*	Σ*wx*	Σ*wy*	Σwx^2	Σwy^2	Σ*wxy*	S_{xx}	S_{xy}	S_{yy}	$\bar{x}$	$\bar{y}$	*a*
T	19.39	– 238.2	0.11	2981.1	26.05	– 37.45	55.88	– 36.11	26.05	– 12.28	0.006	– 7.931

5.4. EXTENDED SIGMOID DOSE-RESPONSE CURVES

5.4.1. FOUR-PARAMETER LOGISTIC CURVE ANALYSIS

A serological assay of tetanus sera

As already stated in Section 3.4, this example is intended to illustrate a "possible" way to analyse the data presented, but not necessarily to reflect the "only" or the "most appropriate" way. Many other approaches can be found in the literature, but in most cases they should not yield dramatically different outcomes. A short discussion of alternative approaches and other statistical considerations is given in Section 7.5.

A guinea-pig antiserum is assayed against a standard serum (0.4 IU/mL) using an enzyme-linked immunosorbent assay technique (ELISA). 10 two-fold dilutions of each serum were applied on a 96-well ELISA plate. Each dilution was applied twice. The observed responses are listed in Table 5.4.1.-I.

Table 5.4.1.-I. – *Observed responses*

Standard *S*			Preparation to be examined *T*		
Dil.	Obs. 1	Obs. 2	Dil.	Obs. 1	Obs. 2
1/10	2.912	2.917	1/10	3.017	2.987
1/20	2.579	2.654	1/20	2.801	2.808
1/40	2.130	2.212	1/40	2.401	2.450
1/80	1.651	1.638	1/80	1.918	1.963
1/160	1.073	0.973	1/160	1.364	1.299
1/320	0.585	0.666	1/320	0.861	0.854
1/640	0.463	0.356	1/640	0.497	0.496
1/1280	0.266	0.234	1/1280	0.340	0.344
1/2560	0.228	0.197	1/2560	0.242	0.217
1/5120	0.176	0.215	1/5120	0.178	0.125

For this example, it will be assumed that the laboratory has validated conditions 1 to 3 in Section 3.1.1 when the assay was being developed for routine use. In addition, the laboratory has validated that the upper limit and lower limit of the samples can be assumed to be equal.

No unusual features are discovered in a graphical representation. A least squares method of a suitable computer program is used to fit the parameters of the logistic function, assuming that the residual error terms are independent and identically distributed normal random variables. In this case, 3 parameters (α, β and δ) are needed to describe the common slope-factor and the common lower and upper asymptotes. 2 additional parameters (γ_S and γ_T) are needed to describe the horizontal location of the 2 curves.

The following estimates of the parameters are returned by the program:

$$\alpha = 3.196 \qquad \gamma_S = -4.307$$

$$\beta = 1.125 \qquad \gamma_T = -4.684$$

$$\delta = 0.145$$

In addition, the estimated residual variance (s^2) is returned as 0.001429 with 20 degrees of freedom (within-treatments variation).

In order to obtain confidence limits, and also to check for parallelism and linearity, the observed responses (u) are linearised and submitted to a weighted parallel-line analysis by the program. This procedure is very similar to that described in Section 4.2 for probit analysis with the following modifications:

$$Y = \beta(x - \gamma) \qquad y = Y + \frac{\left(\frac{u-\delta}{\alpha-\delta}\right) - \Phi}{Z}$$

$$\Phi = \frac{1}{1+e^{-Y}} \qquad w = \frac{Z^2(\alpha-\delta)^2}{s^2}$$

$$Z = \frac{e^{-Y}}{(1+e^{-Y})^2}$$

The resulting weighted analysis of variance of the transformed responses (y) using weights (w) is shown in Table 5.4.1.-II.

Table 5.4.1.-II – *Weighted analysis of variance*

Source of variation	Degrees of freedom	χ^2	Probability
Preparations	1	0.529653	0.467
Regression	1	6599.51	0.000
Non-parallelism	1	0.0458738	0.830
Non-linearity	16	8.89337	0.918
Treatments	19	6608.98	0.000
Residual error	20	20.0000	
Total	39	6628.98	

There are no significant deviations from parallelism and linearity and thus the assay is satisfactory for potency calculations. If the condition of equal upper and lower asymptotes is not fulfilled, significant deviations from linearity and/or parallelism are likely to occur because the tests for linearity and parallelism reflect the goodness of fit of the complete four-parameter model. The residual error in the analysis of variance is always equal to 1 as a result of the transformation. However, a heterogeneity factor (analogous to that for the probit model) can be computed.

The relative potency of the test preparation can be obtained as the antilogarithm of $\gamma_S - \gamma_T$. Multiplying by the assigned potency of the standard yields an estimate of 1.459 × 0.4 = 0.584 IU/mL. Formula 4.2.3.-2 gives 95 per cent confidence limits from 0.557-0.612 IU/mL.

6. COMBINATION OF ASSAY RESULTS

6.1. INTRODUCTION

Replication of independent assays and combination of their results is often needed to fulfil the requirements of the European Pharmacopoeia. The question then arises as to whether it is appropriate to combine the results of such assays and if so in what way.

2 assays may be regarded as mutually independent when the execution of either does not affect the probabilities of the possible outcomes of the other. This implies that the random errors in all essential factors influencing the result (for example, dilutions of the standard and of the preparation to be examined, the sensitivity of the biological indicator) in one assay must be independent of the corresponding random errors in the other one. Assays on successive days using the original and retained dilutions of the standard therefore are not independent assays.

There are several methods for combining the results of independent assays, the most theoretically acceptable being the most difficult to apply. 3 simple, approximate methods are described below; others may be used provided the necessary conditions are fulfilled.

Before potencies from assays based on the parallel-line or probit model are combined they must be expressed in logarithms; potencies derived from assays based on the slope-ratio model are used as such. As the former models are more common than those based on the slope-ratio model, the symbol M denoting ln potency is used in the formulae in this section; by reading R (slope-ratio) for M, the analyst

may use the same formulae for potencies derived from assays based on the slope-ratio model. All estimates of potency must be corrected for the potency assigned to each preparation to be examined before they are combined.

6.2. WEIGHTED COMBINATION OF ASSAY RESULTS

This method can be used provided the following conditions are fulfilled:

1) the potency estimates are derived from independent assays;

2) for each assay *C* is close to 1 (say less than 1.1);

3) the number of degrees of freedom of the individual residual errors is not smaller than 6, but preferably larger than 15;

4) the individual potency estimates form a homogeneous set (see Section 6.2.2).

When these conditions are not fulfilled this method cannot be applied. The method described in Section 6.3 may then be used to obtain the best estimate of the mean potency to be adopted in further assays as an assumed potency.

6.2.1. CALCULATION OF WEIGHTING COEFFICIENTS

It is assumed that the results of each of the n' assays have been analysed to give n' values of *M* with associated confidence limits. For each assay the logarithmic confidence interval *L* is obtained by subtracting the lower limit from the upper. A weight *W* for each value of *M* is calculated from equation 6.2.1.-1, where *t* has the same value as that used in the calculation of confidence limits.

$$W = \frac{4t^2}{L^2} \qquad (6.2.1.\text{-}1)$$

6.2.2. HOMOGENEITY OF POTENCY ESTIMATES

By squaring the deviation of each value of *M* from the weighted mean, multiplying by the appropriate weight and summing over all assays, a statistic is obtained which is approximately distributed as χ^2 (see Table 8.3) and which may be used to test the homogeneity of a set of ln potency estimates:

$$\chi^2 \approx \sum_{n'} W\left(M - \overline{M}\right)^2 \text{ where } \overline{M} = \frac{\sum WM}{\sum W} \qquad (6.2.2.\text{-}1)$$

If the calculated χ^2 is smaller than the tabulated value corresponding to $(n' - 1)$ degrees of freedom the potencies are homogeneous and the mean potency and limits obtained in Section 6.2.3 will be meaningful.

If the calculated value of this statistic is greater than the tabulated value, the potencies are heterogeneous. This means that the variation between individual estimates of *M* is greater than would have been predicted from the estimates of the confidence limits, i.e. that there is a significant variability between the assays. Under these circumstances condition 4 is not fulfilled and the equations in Section 6.2.3 are no longer applicable. Instead, the formulae in Section 6.2.4 may be used.

6.2.3. CALCULATION OF THE WEIGHTED MEAN AND CONFIDENCE LIMITS

The products *WM* are formed for each assay and their sum divided by the total weight for all assays to give the logarithm of the weighted mean potency.

$$\overline{M} = \frac{\sum WM}{\sum W} \qquad (6.2.3.\text{-}1)$$

The standard error of the ln (mean potency) is taken to be the square root of the reciprocal of the total weight:

$$s_{\overline{M}} = \sqrt{\frac{1}{\sum W}} \qquad (6.2.3.\text{-}2)$$

and approximate confidence limits are obtained from the antilogarithms of the value given by

$$\overline{M} \pm t \times s_{\overline{M}} \qquad (6.2.3.\text{-}3)$$

where the number of degrees of freedom of *t* equals the sum of the number of degrees of freedom for the error mean squares in the individual assays.

6.2.4. WEIGHTED MEAN AND CONFIDENCE LIMITS BASED ON THE INTRA- AND INTER-ASSAY VARIATION

When results of several repeated assays are combined, the (χ^2-value may be significant. The observed variation is then considered to have two components:

- the intra-assay variation $s_M^2 = 1/W$,
- the inter-assay variation $s_{\overline{M}}^2 = \dfrac{\sum\left(M - \overline{M}\right)^2}{n'\left(n' - 1\right)}$

where $\overline{M}$ is the unweighted mean. The former varies from assay to assay whereas the latter is common to all *M*.

For each *M* a weighting coefficient is then calculated as:

$$W' = \frac{1}{s_M^2 + s_{\overline{M}}^2}$$

which replaces *W* in Section 6.2.3. where *t* is taken to be approximately 2.

6.3. UNWEIGHTED COMBINATION OF ASSAY RESULTS

To combine the n' estimates of *M* from n' assays in the simplest way, the mean is calculated and an estimate of its standard deviation is obtained by calculating:

$$s_{\overline{M}}^2 = \frac{\sum\left(M - \overline{M}\right)^2}{n'\left(n' - 1\right)} \qquad (6.3.\text{-}1)$$

and the limits are:

$$\overline{M} \pm t s_{\overline{M}} \qquad (6.3.\text{-}2)$$

where *t* has $(n' - 1)$ degrees of freedom. The number n' of estimates of *M* is usually small, and hence the value of *t* is quite large.

6.4. EXAMPLE OF A WEIGHTED MEAN POTENCY WITH CONFIDENCE LIMITS

Table 6.4.-I lists 6 independent potency estimates of the same preparation together with their 95 per cent confidence limits and the number of degrees of freedom of their error variances. Conditions 1, 2 and 3 in Section 6.2. are met. The ln potencies and the weights are calculated as described in Section 6.2.

Table 6.4.-I. – *Potency estimates and confidence intervals of 6 independent assays*

Potency estimate (IU/vial)	Lower limit (IU/vial)	Upper limit (IU/vial)	Degrees of freedom	ln potency *M*	Weight *W*
18 367	17 755	19 002	20	9.8183	3777.7
18 003	17 415	18 610	20	9.7983	3951.5
18 064	17 319	18 838	20	9.8017	2462.5
17 832	17 253	18 429	20	9.7887	4003.0
18 635	17 959	19 339	20	9.8328	3175.6
18 269	17 722	18 834	20	9.8130	4699.5

Homogeneity of potency estimates is assessed with formula 6.2.2.-1 which gives a χ^2 of 4.42 with 5 degrees of freedom. This is not significant (p = 0.49) and thus all conditions are met.

A weighted mean potency is calculated with formula 6.2.3.-1 which yields 9.8085.

Formula 6.2.3.-2 gives a standard deviation of 0.00673 and approximate 95 per cent confidence limits of 9.7951 and 9.8218 are calculated with formula 6.2.3.-3 where *t* has 120 degrees of freedom.

By taking the antilogarithms a potency of 18 187 IU/vial is found with 95 per cent confidence limits from 17 946-18 431 IU/vial.

7. BEYOND THIS ANNEX

It is impossible to give a comprehensive treatise of statistical methods in a pharmacopoeial text. However, the methods described in this annex should suffice for most pharmacopoeial purposes. This section tries to give a more abstract survey of alternative or more general methods that have been developed. The interested reader is encouraged to further explore the existing literature in this area. The use of more specialised statistical methods should, in any case, be left to qualified personnel.

7.1. GENERAL LINEAR MODELS

The methods given in this annex can be described in terms of general linear models (or generalised linear models to include the probit and logit methods). The principle is to define a linear structure matrix X (or design matrix) in which each row represents an observation and each column a linear effect (preparation, block, column, dose). For example: the Latin square design in example 5.1.2 would involve a matrix with 36 rows and 13 columns. 1 column for each of the preparations, 1 column for the doses, 5 columns for each block except the first, and 5 columns for each row except the first. All columns, except the one for doses, are filled with 0 or 1 depending on whether or not the observation relates to the effect. A vector Y is filled with the (transformed) observations. The effects are estimated with the formula $(X^tX)^{-1}X^tY$ from which the potency estimate m can easily be derived as a ratio of relevant effects. Confidence intervals are calculated from Fieller's theorem:

$$m_L, m_U = \frac{\left[m - \frac{g v_{12}}{v_{22}} \pm \frac{ts}{b}\sqrt{v_{11} - 2m v_{12} + m^2 v_{22} - g\left(v_{11} - \frac{v_{12}^2}{v_{22}}\right)}\right]}{(1-g)}$$

where $g = \frac{t^2 s^2 v_{22}}{b^2}$

and v_{11}, v_{22}, v_{12} represent the variance multipliers for the numerator, the denominator and their covariance multiplier respectively. These are taken directly from $(X^tX)^{-1}$ or indirectly by noting that:

$$\mathrm{Var}(a_1 - a_2) = \mathrm{Var}(a_1) + \mathrm{Var}(a_2) - 2\mathrm{Cov}(a_1, a_2)$$

$$\text{and } \mathrm{Cov}(a_1 - a_2, b) = \mathrm{Cov}(a_1, b) - \mathrm{Cov}(a_2, b)$$

A full analysis of variance in which all components are partitioned is slightly more complicated as it involves a renewed definition of X with more columns to relax the assumptions of parallelism and linearity, after which the linear hypotheses can be tested. For assays depending upon quantal responses the linear effects (intercepts a_S, a_T etc. and the common slope b are found by maximising the sum over treatments of $n\ln \Phi(a_i + bx) + (n - r)\ln(1 - \Phi(a_i + bx))$ where x is the ln(dose), Φ denotes the shape of the distribution and $i \in \{S, T, ...\}$.

7.2. HETEROGENEITY OF VARIANCE

Heterogeneity of variance cannot always be solved by simply transforming the responses. A possible way to cope with this problem is to perform a weighted linear regression. In order to obtain an unbiased estimate, the weight of the observations is taken to be proportional to the reciprocal of the error variances. Since the true error variance is not always known, an iterative reweighted linear procedure may be followed. However, the calculation of the confidence interval involves new problems.

7.3. OUTLIERS AND ROBUST METHODS

The method of least squares described in this annex has the disadvantage of being very sensitive to outliers. A clear outlier may completely corrupt the calculations. This problem is often remedied by discarding the outlying result from the dataset. This policy can lead to arbitrary rejection of data and is not always without danger. It is not easy to give a general guideline on how to decide whether or not a specific observation is an outlier and it is for this reason that many robust methods have been developed. These methods are less sensitive to outliers because they give less weight to observations that are far away from the predicted value. New problems usually arise in computing confidence intervals or defining a satisfactory function to be minimised.

7.4. CORRELATED ERRORS

Absolute randomisation is not always feasible or very undesirable from a practical point of view. Thus, subsequent doses within a dilution series often exhibit correlated errors leading to confidence limits that are far too narrow. Some methods have been developed that take account of this autocorrelation effect.

7.5. EXTENDED NON-LINEAR DOSE-RESPONSE CURVES

Analysis of extended non-linear dose-response curves raises a number of statistical questions which require consideration, and for which professional advice is recommended. Some of these are indicated below.

1) An example using the four-parameter logistic function has been shown. However, models based on functions giving other sigmoid curves may also be used. Models incorporating additional asymmetry parameters have been suggested.

2) Heterogeneity of variance is common when responses cover a wide range. If the analysis ignores the heterogeneity, interpretation of results may not be correct and estimates may be biased. Use of the reciprocal of the error variances as weights is unlikely to be reliable with limited numbers of replicates. It may be appropriate to estimate a function which relates variance to mean response.

3) The statistical curve-fitting procedures may give different estimates depending on assumptions made about the homogeneity of the variance and on the range of responses used.

4) In principle, equality of upper and lower response limits for the different preparations included in an assay can be directly tested in each assay. However, interpretation of the results of these tests may not be straightforward. The tests for linearity and parallelism given by the simplified method of analysis (Example 5.4.1) indirectly incorporate tests for equality and accuracy of upper and lower limits.

5) Many assays include "controls" which are intended to identify the upper and/or lower response limits. However, these values may not be consistent with the statistically fitted upper and lower response limits based on the extended dose-response curve.

6) The simplified method of analysis given in Example 5.4.1 provides approximate confidence intervals. Other methods may also be used, for example intervals based on lack-of-fit of the completely specified model. For typical assay data, with responses covering the complete range for each preparation tested, all methods give similar results.

7.6. NON-PARALLELISM OF DOSE-RESPONSE CURVES

Similarity of dose-response relationships is a fundamental criterion for assessing whether an assay may be regarded as a dilution assay and hence whether the estimation of relative potency is valid (see Section 3.1.1). This criterion is frequently met by showing that dose-response curves for standard and test samples do not deviate significantly from parallelism. Underestimation of the residual error can lead to excess rejection of assays due to significant deviations from parallelism and/or linearity. This is often an artefact of

inappropriate assay design or analysis. Minor modifications to assay designs might in many cases substantially improve the estimation of the residual error. Analysis allowing for the actual level of replication may also improve the situation. If estimation of the relevant residual error is not feasible for individual assays, for example because it is impractical to create independent doses and/or replicates, it might be possible to obtain a more correct estimate of the residual error during the assay validation process. There may also be cases where the assay system is sufficiently precise to detect slight but genuine non-parallelism. If there is true non-parallelism this needs to be recognised and a suitable solution adopted. A solution might, for example, require a suitable standard that is similar in composition to, and therefore parallel to, the test samples. If the assay system is responding in a non-specific manner to extraneous components of the standard or test samples, then a more specific assay system that does not respond to the irrelevant components may be the solution. No simple, generally applicable statistical solution exists to overcome these fundamental problems. The appropriate action has to be decided on a case-by-case basis with the help of statistical expertise.

8. TABLES AND GENERATING PROCEDURES

The tables in this section list the critical values for the most frequently occurring numbers of degrees of freedom. If a critical value is not listed, reference should be made to more extensive tables. Many computer programs include statistical functions and their use is recommended instead of the tables in this section. Alternatively, the generating procedures given below each table can be used to compute the probability corresponding to a given statistic and number of degrees of freedom.

8.1. THE *F*-DISTRIBUTION

If an observed value is higher than the value in Table 8.1.-I, it is considered to be significant (upper lines, $p = 0.05$) or highly significant (lower lines, $p = 0.01$). *df*1 is the number of degrees of freedom of the numerator and *df*2 is the number of degrees of freedom of the denominator.

Generating procedure. Let `F` be the *F*-ratio and `df1` and `df2` as described above. Let `pi` = π = 3.14159265358979... The procedure in Table 8.1.-II will then generate the *p*-value.

8.2. THE *t*-DISTRIBUTION

If an observed value is higher than the value in Table 8.2.-I, it is considered to be significant ($p = 0.05$) or highly significant ($p = 0.01$).

Generating procedures. The *p*-value for a given *t* with df degrees of freedom can be found with the procedures in Section 8.1 where `F` = t^2, `df1` = 1 and `df2` = df.

The *t*-value ($p = 0.05$) for a given number of degrees of freedom df can be found with the procedure in Table 8.2.-II, which should be accurate up to 6 decimal places.

Table 8.1.-I – *Critical values of the F-distribution*

df1 →	**1**	**2**	**3**	**4**	**5**	**6**	**8**	**10**	**12**	**15**	**20**	**∞**
df2 ↓												
10	4.965	4.103	3.708	3.478	3.326	3.217	3.072	2.978	2.913	2.845	2.774	2.538
	10.044	7.559	6.552	5.994	5.636	5.386	5.057	4.849	4.706	4.558	4.405	3.909
12	4.747	3.885	3.490	3.259	3.106	2.996	2.849	2.753	2.687	2.617	2.544	2.296
	9.330	6.927	5.953	5.412	5.064	4.821	4.499	4.296	4.155	4.010	3.858	3.361
15	4.543	3.682	3.287	3.056	2.901	2.790	2.641	2.544	2.475	2.403	2.328	2.066
	8.683	6.359	5.417	4.893	4.556	4.318	4.004	3.805	3.666	3.522	3.372	2.868
20	4.351	3.493	3.098	2.866	2.711	2.599	2.447	2.348	2.278	2.203	2.124	1.843
	8.096	5.849	4.938	4.431	4.103	3.871	3.564	3.368	3.231	3.088	2.938	2.421
25	4.242	3.385	2.991	2.759	2.603	2.490	2.337	2.236	2.165	2.089	2.007	1.711
	7.770	5.568	4.675	4.177	3.855	3.627	3.324	3.129	2.993	2.850	2.699	2.169
30	4.171	3.316	2.922	2.690	2.534	2.421	2.266	2.165	2.092	2.015	1.932	1.622
	7.562	5.390	4.510	4.018	3.699	3.473	3.173	2.979	2.843	2.700	2.549	2.006
50	4.034	3.183	2.790	2.557	2.400	2.286	2.130	2.026	1.952	1.871	1.784	1.438
	7.171	5.057	4.199	3.720	3.408	3.186	2.890	2.698	2.563	2.419	2.265	1.683
∞	3.841	2.996	2.605	2.372	2.214	2.099	1.938	1.831	1.752	1.666	1.571	1.000
	6.635	4.605	3.782	3.319	3.017	2.802	2.511	2.321	2.185	2.039	1.878	1.000

Table 8.1.-II – *Generating procedure for the F-distribution*

If df1 is even	If df1 is odd and df2 is even	If df1 and df2 are odd
`x=df1/(df1+df2/F)`	`x=df2/(df2+df1*F)`	`x=atn(sqr(df1*F/df2))`
`s=1`	`s=1`	`cs=cos(x)`
`t=1`	`t=1`	`sn=sin(x)`
`for i=2 to (df1-2) step 2`	`for i=2 to (df2-2) step 2`	`x=x/2`
`t=t*x*(df2+i-2)/i`	`t=t*x*(df1+i-2)/i`	`s=0`
`s=s+t`	`s=s+t`	`t=sn*cs/2`
`next i`	`next i`	`v=0`
`p=s*(1-x)^(df2/2)`	`p=1-s*(1-x)^(df1/2)`	`w=1`
		`for i=2 to (df2-1) step 2`
		`s=s+t`
		`t=t*i/(i+1)*cs*cs`
		`next i`
		`for i=1 to (df1-2) step 2`
		`v=v+w`
		`w=w*(df2+i)/(i+2)*sn*sn`
		`next i`
		`p=1+(t*df2*v-x-s)/pi*4`

Table 8.2.-I – *Critical values of the t-distribution*

df	$p = 0.05$	$p = 0.01$	df	$p = 0.05$	$p = 0.01$
1	12.706	63.656	22	2.074	2.819
2	4.303	9.925	24	2.064	2.797
3	3.182	5.841	26	2.056	2.779
4	2.776	4.604	28	2.048	2.763
5	2.571	4.032	30	2.042	2.750
6	2.447	3.707	35	2.030	2.724
7	2.365	3.499	40	2.021	2.704
8	2.306	3.355	45	2.014	2.690
9	2.262	3.250	50	2.009	2.678
10	2.228	3.169	60	2.000	2.660
12	2.179	3.055	70	1.994	2.648
14	2.145	2.977	80	1.990	2.639
16	2.120	2.921	90	1.987	2.632
18	2.101	2.878	100	1.984	2.626
20	2.086	2.845	∞	1.960	2.576

Table 8.2.-II – *Generating procedure for the t-distribution*

```
t = 1.959964+
    2.37228/df+
    2.82202/df^2+
    2.56449/df^3+
    1.51956/df^4+
    1.02579/df^5+
    0.44210/df^7
```

8.3. THE χ^2-DISTRIBUTION

Table 8.3.-I – *Critical values of the χ^2-distribution*

df	$p = 0.05$	$p = 0.01$	df	$p = 0.05$	$p = 0.01$
1	3.841	6.635	11	19.675	24.725
2	5.991	9.210	12	21.026	26.217
3	7.815	11.345	13	22.362	27.688
4	9.488	13.277	14	23.685	29.141
5	11.070	15.086	15	24.996	30.578
6	12.592	16.812	16	26.296	32.000
7	14.067	18.475	20	31.410	37.566
8	15.507	20.090	25	37.652	44.314
9	16.919	21.666	30	43.773	50.892
10	18.307	23.209	40	55.758	63.691

If an observed value is higher than the value in Table 8.3.-I, it is considered to be significant ($p = 0.05$) or highly significant ($p = 0.01$).

Generating procedure. Let `X2` be the χ^2-value and `df` as described above. The procedure in Table 8.3.-II will then generate the p-value.

Table 8.3.-II – *Generating procedure for the χ^2-distribution*

If df is even	If df is odd
`s=0`	`x=sqr(x2)`
`t=exp(-x2/2)`	`s=0`
`for i=2 to df step 2`	`t=x*exp(-x2/2)/sqr(pi/2)`
`s=s+t`	`for i=3 to df step 2`
`t=t*x2/i`	`s=s+t`
`next i`	`t=t*x2/i`
`p=1-s`	`next i`
	`p=1-s-2*phi(x)`

In this procedure `phi` is the cumulative standard normal distribution function Φ (see Section 8.4).

8.4. THE Φ-DISTRIBUTION (THE CUMULATIVE STANDARD NORMAL DISTRIBUTION)

The Φ-value for negative x is found from Table 8.4.-I as $1 - \Phi(-x)$.

Generating procedure: Let `x` be the x-value. The procedure in Table 8.4.-II will generate the corresponding Φ-value if $0 \leq x \leq 8.15$. If x is greater than 8.15 the Φ-value can be set to 1. If x is negative, the formula given above can be used. This procedure assumes that the computer can represent about 15 decimal places. If less digits or more digits can be represented, the procedure needs some trivial modifications.

Table 8.4.-I – *Values of the Φ-distribution*

x	Φ	x	Φ	x	Φ
0.00	0.500	1.00	0.841	2.00	0.977
0.05	0.520	1.05	0.853	2.05	0.980
0.10	0.540	1.10	0.864	2.10	0.982
0.15	0.560	1.15	0.875	2.15	0.984
0.20	0.579	1.20	0.885	2.20	0.986
0.25	0.599	1.25	0.894	2.25	0.988
0.30	0.618	1.30	0.903	2.30	0.989
0.35	0.637	1.35	0.911	2.35	0.991
0.40	0.655	1.40	0.919	2.40	0.992
0.45	0.674	1.45	0.926	2.45	0.993
0.50	0.691	1.50	0.933	2.50	0.994
0.55	0.709	1.55	0.939	2.55	0.995
0.60	0.726	1.60	0.945	2.60	0.995
0.65	0.742	1.65	0.951	2.65	0.996
0.70	0.758	1.70	0.955	2.70	0.997
0.75	0.773	1.75	0.960	2.75	0.997
0.80	0.788	1.80	0.964	2.80	0.997
0.85	0.802	1.85	0.968	2.85	0.998
0.90	0.816	1.90	0.971	2.90	0.998
0.95	0.829	1.95	0.974	2.95	0.998

Table 8.4.-II – *Generating procedure for the Φ-distribution*

```
s=0
t=x
i=1
repeat
s=s+t
i=i+2
t=t*x*x/i
until t<1E-16
phi=0.5+s*exp(-x*x/2)/sqr(2*pi)
```

8.5. RANDOM PERMUTATIONS

Random permutations are needed in randomised block designs. The following algorithm shows how the built-in random generator of a computer can be used to create random permutations of N treatments.

Step 1. Write the N possible treatments down in a row.

Step 2. Obtain a random integer r such that $1 \leq r \leq N$.

Step 3. Exchange the r-th treatment with the N-th treatment in the row.

Step 4. Let $N = N - 1$ and repeat steps 2 to 4 until $N = 1$.

An example with 6 treatments will illustrate this algorithm.

1.	$N = 6$	S_1	S_2	S_3	T_1	T_2	T_3
2.	$r = 2$		→				←
3.		S_1	T_3	S_3	T_1	T_2	S_2
4.	$N = 5$						
2.	$r = 4$				→	←	
3.		S_1	T_3	S_3	T_2	T_1	S_2
4.	$N = 4$						
2.	$r = 4$				↓		
3.		S_1	T_3	S_3	T_2	T_1	S_2
4.	$N = 3$						
2.	$r = 1$	→		←			
3.		S_3	T_3	S_1	T_2	T_1	S_2
4.	$N = 2$						
2.	$r = 1$	→	←				
3.		T_3	S_3	S_1	T_2	T_1	S_2
4.	$N = 1$						

8.6. LATIN SQUARES

The following example shows how 3 independent permutations can be used to obtain a Latin square.

1) Generate a random permutation of the N possible treatments (see Section 8.5):

T_3	S_3	S_1	T_2	T_1	S_2

2) A simple Latin square can now be constructed by "rotating" this permutation to the right. This can be done as follows. Write the permutation found in step 1 down on the first row. The second row consists of the same permutation, but with all treatments shifted to the right. The rightmost treatment is put on the empty place at the left. This is repeated for all the rows until all the treatments appear once in each column:

T_3	S_3	S_1	T_2	T_1	S_2
S_2	T_3	S_3	S_1	T_2	T_1
T_1	S_2	T_3	S_3	S_1	T_2
T_2	T_1	S_2	T_3	S_3	S_1
S_1	T_2	T_1	S_2	T_3	S_3
S_3	S_1	T_2	T_1	S_2	T_3

3) Generate 2 independent random permutations of the figures 1 to N:

– one for the rows:

2	**3**	**6**	**1**	**4**	**5**

– and one for the columns:

3	**4**	**6**	**2**	**5**	**1**

4) The Latin square can now be found by sorting the rows and columns of the simple Latin square according to the 2 permutations for the rows and columns:

	3	4	6	2	5	1
2	T_3	S_3	S_1	T_2	T_1	S_2
3	S_2	T_3	S_3	S_1	T_2	T_1
6	T_1	S_2	T_3	S_3	S_1	T_2
1	T_2	T_1	S_2	T_3	S_3	S_1
4	S_1	T_2	T_1	S_2	T_3	S_3
5	S_3	S_1	T_2	T_1	S_2	T_3

↓

	1	2	3	4	5	6
1	S_1	T_3	T_2	T_1	S_3	S_2
2	S_2	T_2	T_3	S_3	T_1	S_1
3	T_1	S_1	S_2	T_3	T_2	S_3
4	S_3	S_2	S_1	T_2	T_3	T_1
5	T_3	T_1	S_3	S_1	S_2	T_2
6	T_2	S_3	T_1	S_2	S_1	T_3

9. GLOSSARY OF SYMBOLS

Symbol	Definition
a	Intersection of linear regression of responses on dose or ln(dose)
b	Slope of linear regression of responses on dose or on ln(dose)
d	Number of dose levels for each preparation (excluding the blank in slope-ratio assays)
e	Base of natural logarithms (= 2.71828182845905...)
g	Statistic used in Fieller's theorem: $g = \frac{C-1}{C}$
h	Number of preparations in an assay, including the standard preparation
m	Potency estimate obtained as a ratio of effects in general linear models
n	Number of replicates for each treatment
p	Probability of a given statistic being larger than the observed value. Also used as the ratio r/n in probit analysis
r	The number of responding units per treatment group in assays depending upon quantal responses
s	Estimate of standard deviation ($= \sqrt{s^2}$)
s^2	Estimate of residual variance given by error mean square in analysis of variance
t	Student's statistic (Table 8.2.)

Symbol	Definition
u	Observed response in four-parameter analysis
v_{11}, v_{12}, v_{22}	(Co)variance multipliers for numerator and denominator of ratio m in Fieller's theorem
w	Weighting coefficient
x	The ln(dose)
y	Individual response or transformed response
A	Assumed potencies of test preparations when making up doses
B	Mean response to blanks in slope-ratio assays
C	Statistic used in the calculation of confidence intervals: $C = \frac{1}{1-g}$
$C_1, \ldots, C_n$	Mean response to each column of a Latin square design
D_1, D_2	Mean response on time 1 or time 2 in the twin cross-over design
F	Ratio of 2 independent estimates of variance following an F-distribution (Table 8.1.)
$G_S, G_T, \ldots$	Treatment values used in the analysis of variance for slope-ratio assays
H_P, H_L	Multipliers used in the analysis of variance for parallel-line assays
H_B, H_I	Multipliers used in the analysis of variance for slope-ratio assays
I	In parallel-line assays, the ln of the ratio between adjacent doses. In slope-ratio assays, the interval between adjacent doses
$J_S, J_T, \ldots$	Linearity values used in the analysis of variance for slope-ratio assays
K	Correction term used in the calculation of sums of squares in the analysis of variance
L	Width of confidence interval in logarithms
$L_S, L_T, \ldots$	Linear contrasts of standard and test preparations
M'	ln potency ratio of a given test preparation
N	Total number of treatments in the assay (= dh)
$P_S, P_T, \ldots$	Sum of standard and test preparations
R	Estimated potency of a given test preparation
R'	Potency ratio of a given test preparation
$R_1, \ldots, R_n$	Mean response in each of rows 1 to n of a Latin square design, or in each block of a randomised block design
S	Standard preparation
$S_1, \ldots, S_d$	Mean response to the lowest dose 1 up to the highest dose d of the standard preparation S
SS	Sum of squares due to a given source of variation
$T, U, V, \ldots$	Test preparations
$T_1, \ldots, T_d$	Mean response to the lowest dose 1 up to the highest dose d of test preparation T
V	Variance coefficient in the calculation of confidence limits
W	Weighting factor in combination of assay results
X	Linear structure or design matrix used in general linear models
Y	Vector representing the (transformed) responses in general linear models
Z	The first derivative of Φ
α	Upper asymptote of the ln(dose)-response curve in four-parameter analysis
β	Slope-factor of the ln(dose)-response curve in four-parameter analysis
γ	The ln(dose) giving 50 per cent response in the four-parameter analysis
δ	Lower asymptote of the ln(dose)-response curve in four-parameter analysis
π	3.141592653589793238...
Φ	Cumulative standard normal distribution function (Table 8.4.)
χ^2	Chi-square statistic (Table 8.3.)

10. LITERATURE

This section lists some recommended literature for further study.

Finney, D.J. (1971). *Probit Analysis*, 3rd Ed. Cambridge University Press, Cambridge.

Nelder, J.A. & Wedderburn, R.W.M. (1972). Generalized linear models, *Journal of the Royal Statistical Society*, *Series* A 135, 370-384.

DeLean, A., Munson, P.J., and Rodbard, D. (1978). Simultaneous analysis of families of sigmoidal curves: Application to bioassay, radioligand assay, and physiological dose-response curves, *Am. J. Physiol.* 235(2): E97-E102.

Finney, D.J. (1978). *Statistical Method in Biological Assay*, 3rd Ed. Griffin, London.

Sokal, R.R. & Rohlf, F.R. (1981). *Biometry*: *Principles and Practice of Statistics in Biological Research*, 2nd Ed. W.H. Freemann & CO, New York.

Peace, K.E. (1988). *Biopharmaceutical Statistics for Drug Development*, Marcel Dekker Inc., New York/Basel.

Bowerman, B.L. & O'Connell, R.T. (1990). *Linear Statistical Models an Applied Approach*, 2nd Ed. PWS-KENT Publishing Company, Boston.

Govindarajulu, Z. (2001). *Statistical Techniques in Bioassay*, 2nd revised and enlarged edition, Karger, New York.

01/2008:50400

5.4. RESIDUAL SOLVENTS

LIMITING RESIDUAL SOLVENT LEVELS IN ACTIVE SUBSTANCES, EXCIPIENTS AND MEDICINAL PRODUCTS

The International Conference on Harmonisation of Technical Requirements for Registration of Pharmaceuticals for Human Use (ICH) has adopted Impurities Guidelines for Residual Solvents which prescribes limits for the content of solvents which may remain in active substances, excipients and medicinal products after processing. This guideline, the text of which is reproduced below, excludes existing marketed products. The European Pharmacopoeia is, however, applying the same principles enshrined in the guideline to existing active substances, excipients and medicinal products whether or not they are the subject of a monograph of the Pharmacopoeia. All substances and products are to be tested for the content of solvents likely to be present in a substance or product.

Where the limits to be applied comply with those given below, tests for residual solvents are not generally mentioned in specific monographs since the solvents employed may vary from one manufacturer to another and the requirements of this general chapter are applied via the general monograph on *Substances for Pharmaceutical Use (2034)*. The competent authority is to be informed of the solvents employed during the production process. This information is also given in the dossier submitted for a certificate of suitability of the monographs of the European Pharmacopoeia and is mentioned on the certificate.

Where only Class 3 solvents are used, a test for loss on drying may be applied or a specific determination of the solvent may be made. If for a Class 3 solvent a justified and authorised limit higher than 0.5 per cent is applied, a specific determination of the solvent is required.

When Class 1 residual solvents or Class 2 residual solvents (or Class 3 residual solvents which exceed the 0.5 per cent) are used, the methodology described in the general method (*2.4.24*) is to be applied wherever possible. Otherwise an appropriate validated method is to be employed.

When a quantitative determination of a residual solvent is carried out, the result is taken into account for the calculation of the content of the substance except where a test for drying is carried out.

IMPURITIES: GUIDELINES FOR RESIDUAL SOLVENTS (CPMP/ICH/283/95)

1. INTRODUCTION

2. SCOPE OF THE GUIDELINE

3. GENERAL PRINCIPLES

3.1. CLASSIFICATION OF RESIDUAL SOLVENTS BY RISK ASSESSMENT

3.2. METHODS FOR ESTABLISHING EXPOSURE LIMITS

3.3. OPTIONS FOR DESCRIBING LIMITS OF CLASS 2 SOLVENTS

3.4. ANALYTICAL PROCEDURES

3.5. REPORTING LEVELS OF RESIDUAL SOLVENTS

4. LIMITS OF RESIDUAL SOLVENTS

4.1. SOLVENTS TO BE AVOIDED

4.2. SOLVENTS TO BE LIMITED

4.3. SOLVENTS WITH LOW TOXIC POTENTIAL

4.4. SOLVENTS FOR WHICH NO ADEQUATE TOXICOLOGICAL DATA WAS FOUND

GLOSSARY

APPENDIX 1. LIST OF SOLVENTS INCLUDED IN THE GUIDELINE

APPENDIX 2. ADDITIONAL BACKGROUND

A2.1: ENVIRONMENTAL REGULATION OF ORGANIC VOLATILE SOLVENTS

A2.2: RESIDUAL SOLVENTS IN PHARMACEUTICALS

APPENDIX 3. METHODS FOR ESTABLISHING EXPOSURE LIMITS

1. INTRODUCTION

The objective of this guideline is to recommend acceptable amounts of residual solvents in pharmaceuticals for the safety of the patient. The guideline recommends the use of less toxic solvents and describes levels considered to be toxicologically acceptable for some residual solvents.

Residual solvents in pharmaceuticals are defined here as organic volatile chemicals that are used or produced in the manufacture of active substances or excipients, or in the preparation of medicinal products. The solvents are not completely removed by practical manufacturing techniques. Appropriate selection of the solvent for the synthesis of active substance may enhance the yield, or determine characteristics such as crystal form, purity, and solubility. Therefore, the solvent may sometimes be a critical parameter in the synthetic process. This guideline does not address solvents deliberately used as excipients nor does it address solvates. However, the content of solvents in such products should be evaluated and justified.

Since there is no therapeutic benefit from residual solvents, all residual solvents should be removed to the extent possible to meet product specifications, good manufacturing practices, or other quality-based requirements. Medicinal products should contain no higher levels of residual solvents than can be supported by safety data. Some solvents that are known to cause unacceptable toxicities (Class 1, Table 1) should be avoided in the production of active substances, excipients, or medicinal products unless their use can be strongly justified in a risk-benefit assessment. Some solvents associated with less severe toxicity (Class 2, Table 2) should be limited in order to protect patients from potential adverse effects. Ideally, less toxic solvents (Class 3, Table 3) should be used where practical. The complete list of solvents included in this guideline is given in Appendix 1.

The lists are not exhaustive and other solvents can be used and later added to the lists. Recommended limits of Class 1 and 2 solvents or classification of solvents may change as new safety data becomes available. Supporting safety data in a marketing application for a new medicinal product containing a new solvent may be based on concepts in this guideline or the concept of qualification of impurities as expressed in the guideline for active substances (*Q3A*, Impurities in New Active Substances) or medicinal products (*Q3B*, Impurities in New Medicinal Products), or all three guidelines.

2. SCOPE OF THE GUIDELINE

Residual solvents in active substances, excipients, and in medicinal products are within the scope of this guideline. Therefore, testing should be performed for residual solvents when production or purification processes are known to result in the presence of such solvents. It is only necessary to test for solvents that are used or produced in the manufacture or purification of active substances, excipients, or medicinal product. Although manufacturers may choose to test the medicinal product, a cumulative method may be used to calculate the residual solvent levels in the medicinal product from the levels in the ingredients used to produce the medicinal product. If the calculation results in a level equal to or below that recommended in this guideline, no testing of the medicinal product for residual solvents need be considered. If however, the calculated level is above the recommended level, the medicinal product should be tested to ascertain whether the formulation process has reduced the relevant solvent level to within the acceptable amount. Medicinal product should also be tested if a solvent is used during its manufacture.

This guideline does not apply to potential new active substances, excipients, or medicinal products used during the clinical research stages of development, nor does it apply to existing marketed medicinal products.

The guideline applies to all dosage forms and routes of administration. Higher levels of residual solvents may be acceptable in certain cases such as short term (30 days or less) or topical application. Justification for these levels should be made on a case by case basis.

See Appendix 2 for additional background information related to residual solvents.

3. GENERAL PRINCIPLES

3.1. CLASSIFICATION OF RESIDUAL SOLVENTS BY RISK ASSESSMENT

The term "tolerable daily intake" (TDI) is used by the International Program on Chemical Safety (IPCS) to describe exposure limits of toxic chemicals and "acceptable daily intake" (ADI) is used by the World Health Organization (WHO) and other national and international health authorities and institutes. The new term "permitted daily exposure" (PDE) is defined in the present guideline as a pharmaceutically acceptable intake of residual solvents to avoid confusion of differing values for ADI's of the same substance.

Residual solvents assessed in this guideline are listed in Appendix 1 by common names and structures. They were evaluated for their possible risk to human health and placed into one of three classes as follows:

Class 1 solvents: Solvents to be avoided

Known human carcinogens, strongly suspected human carcinogens, and environmental hazards.

Class 2 solvents: Solvents to be limited

Non-genotoxic animal carcinogens or possible causative agents of other irreversible toxicity such as neurotoxicity or teratogenicity.

Solvents suspected of other significant but reversible toxicities.

Class 3 solvents: Solvents with low toxic potential

Solvents with low toxic potential to man; no health-based exposure limit is needed. Class 3 solvents have PDEs of 50 mg or more per day.

3.2. METHODS FOR ESTABLISHING EXPOSURE LIMITS

The method used to establish permitted daily exposures for residual solvents is presented in Appendix 3. Summaries of the toxicity data that were used to establish limits are published in *Pharmeuropa*, Vol. 9, No. 1, Supplement April 1997.

3.3. OPTIONS FOR DESCRIBING LIMITS OF CLASS 2 SOLVENTS

Two options are available when setting limits for Class 2 solvents.

Option 1: The concentration limits in parts per million stated in Table 2 can be used. They were calculated using equation (1) below by assuming a product mass of 10 g administered daily.

$$\text{Concentration (ppm)} = \frac{1000 \times \text{PDE}}{\text{dose}} \qquad (1)$$

Here, PDE is given in terms of mg/day and dose is given in g/day.

These limits are considered acceptable for all substances, excipients, or products. Therefore this option may be applied if the daily dose is not known or fixed. If all excipients and active substances in a formulation meet the limits given in Option 1, then these components may be used in any proportion. No further calculation is necessary provided the daily dose does not exceed 10 g. Products that are administered in doses greater than 10 g per day should be considered under Option 2.

Option 2: It is not considered necessary for each component of the medicinal product to comply with the limits given in Option 1. The PDE in terms of mg/day as stated in Table 2 can be used with the known maximum daily dose and equation (1) above to determine the concentration of residual solvent allowed in a medicinal product. Such limits are considered acceptable provided that is has been demonstrated that the residual solvent has been reduced to the practical minimum. The limits should be realistic in relation to analytical precision, manufacturing capability, reasonable variation in the manufacturing process, and the limits should reflect contemporary manufacturing standards.

Option 2 may be applied by adding the amounts of a residual solvent present in each of the components of the medicinal product. The sum of the amounts of solvent per day should be less than that given by the PDE.

Consider an example of the use of Option l and Option 2 applied to acetonitrile in a medicinal product. The permitted daily exposure to acetonitrile is 4.1 mg per day; thus, the Option 1 limit is 410 ppm. The maximum administered daily mass of a medicinal product is 5.0 g, and the medicinal product contains two excipients. The composition of the medicinal product and the calculated maximum content of residual acetonitrile are given in the following table.

Component	Amount in formulation	Acetonitrile content	Daily exposure
Active substance	0.3 g	800 ppm	0.24 mg
Excipient 1	0.9 g	400 ppm	0.36 mg
Excipient 2	3.8 g	800 ppm	3.04 mg
Medicinal product	5.0 g	728 ppm	3.64 mg

Excipient l meets the Option l limit, but the drug substance, excipient 2, and medicinal product do not meet the Option l limit. Nevertheless, the product meets the Option 2 limit of 4.l mg per day and thus conforms to the recommendations in this guideline.

Consider another example using acetonitrile as residual solvent. The maximum administered daily mass of a medicinal product is 5.0 g, and the medicinal product contains two excipients. The composition of the medicinal product and the calculated maximum content of residual acetonitrile is given in the following table.

Component	Amount in formulation	Acetonitrile content	Daily exposure
Active substance	0.3 g	800 ppm	0.24 mg
Excipient 1	0.9 g	2000 ppm	1.80 mg
Excipient 2	3.8 g	800 ppm	3.04 mg
Medicinal product	5.0 g	1016 ppm	5.08 mg

In this example, the product meets neither the Option 1 nor the Option 2 limit according to this summation. The manufacturer could test the medicinal product to determine if the formulation process reduced the level of acetonitrile. If the level of acetonitrile was not reduced during formulation to the allowed limit, then the manufacturer of the medicinal product should take other steps to reduce the amount of acetonitrile in the medicinal product. If all of these steps fail to reduce the level of residual solvent, in exceptional cases the manufacturer could provide a summary of efforts made to reduce the solvent level to meet the guideline value, and provide a risk-benefit analysis to support allowing the product to be utilised containing residual solvent at a higher level.

3.4. ANALYTICAL PROCEDURES

Residual solvents are typically determined using chromatographic techniques such as gas chromatography. Any harmonised procedures for determining levels of residual solvents as described in the pharmacopoeias should be used, if feasible. Otherwise, manufacturers would be free to select the most appropriate validated analytical procedure for a particular application. If only Class 3 solvents are present, a non-specific method such as loss on drying may be used.

Validation of methods for residual solvents should conform to ICH guidelines "Text on Validation of Analytical Procedures" and "Extension of the ICH Text on Validation of Analytical Procedures".

3.5. REPORTING LEVELS OF RESIDUAL SOLVENTS

Manufacturers of pharmaceutical products need certain information about the content of residual solvents in excipients or active substances in order to meet the criteria of this guideline. The following statements are given as acceptable examples of the information that could be provided from a supplier of excipients or active substances to a pharmaceutical manufacturer. The supplier might choose one of the following as appropriate:

- Only Class 3 solvents are likely to be present. Loss on drying is less than 0.5 per cent.
- Only Class 2 solvents X, Y, ... are likely to be present. All are below the Option 1 limit

  (Here the supplier would name the Class 2 solvents represented by X, Y, ...)
- Only Class 2 solvents X, Y, ... and Class 3 solvents are likely to be present. Residual Class 2 solvents are below the Option 1 limit and residual Class 3 solvents are below 0.5 per cent.

If Class 1 solvents are likely to be present, they should be identified and quantified. "Likely to be present" refers to the solvent used in the final manufacturing step and to solvents that are used in earlier manufacturing steps and not removed consistently by a validated process.

If solvents of Class 2 or Class 3 are present at greater than their Option 1 limits or 0.5 per cent, respectively, they should be identified and quantified.

4. LIMITS OF RESIDUAL SOLVENTS

4.1. SOLVENTS TO BE AVOIDED

Solvents in Class 1 should not be employed in the manufacture of active substances, excipients, and medicinal products because of their unacceptable toxicity or their deleterious environmental effect. However, if their use is unavoidable in order to produce a medicinal product with a significant therapeutic advance, then their levels should be restricted as shown in Table 1, unless otherwise justified. 1,1,1-Trichloroethane is included in Table 1 because it is an environmental hazard. The stated limit of 1500 ppm is based on a review of the safety data.

Table 1. – *Class 1 solvents in pharmaceutical products (solvents that should be avoided)*

Solvent	Concentration limit (ppm)	Concern
Benzene	2	Carcinogen
Carbon tetrachloride	4	Toxic and environmental hazard
1,2-Dichloroethane	5	Toxic
1,1-Dichloroethene	8	Toxic
1,1,1-Trichloroethane	1500	Environmental hazard

4.2. SOLVENTS TO BE LIMITED

Solvents in Table 2 should be limited in pharmaceutical products because of their inherent toxicity. PDEs are given to the nearest 0.1 mg/day, and concentrations are given to the nearest 10 ppm. The stated values do not reflect the necessary analytical precision of determination. Precision should be determined as part of the validation of the method.

Table 2. – *Class 2 solvents in pharmaceutical products*

Solvent	PDE (mg/day)	Concentration limit (ppm)
Acetonitrile	4.1	410
Chlorobenzene	3.6	360
Chloroform	0.6	60
Cyclohexane	38.8	3880
1,2-Dichloroethene	18.7	1870
Dichloromethane	6.0	600
1,2-Dimethoxyethane	1.0	100
N,N-Dimethylacetamide	10.9	1090
N,N-Dimethylformamide	8.8	880
1,4-Dioxane	3.8	380
2-Ethoxyethanol	1.6	160
Ethyleneglycol	6.2	620
Formamide	2.2	220
Hexane	2.9	290
Methanol	30.0	3000
2-Methoxyethanol	0.5	50
Methylbutylketone	0.5	50
Methylcyclohexane	11.8	1180
N-Methylpyrrolidone	5.3	530
Nitromethane	0.5	50
Pyridine	2.0	200
Sulfolane	1.6	160

Solvent	PDE (mg/day)	Concentration limit (ppm)
Tetrahydrofuran	7.2	720
Tetralin	1.0	100
Toluene	8.9	890
1,1,2-Trichloroethene	0.8	80
Xylene*	21.7	2170

*usually 60 per cent *m*-xylene, 14 per cent *p*-xylene, 9 per cent *o*-xylene with 17 per cent ethyl benzene

4.3. SOLVENTS WITH LOW TOXIC POTENTIAL

Solvents in Class 3 (shown in Table 3) may be regarded as less toxic and of lower risk to human health. Class 3 includes no solvent known as a human health hazard at levels normally accepted in pharmaceuticals. However, there are no long-term toxicity or carcinogenicity studies for many of the solvents in Class 3. Available data indicate that they are less toxic in acute or short-term studies and negative in genotoxicity studies. It is considered that amounts of these residual solvents of 50 mg per day or less (corresponding to 5000 ppm or 0.5 per cent under Option l) would be acceptable without justification. Higher amounts may also be acceptable provided they are realistic in relation to manufacturing capability and good manufacturing practice.

Table 3. – *Class 3 solvents which should be limited by GMP or other quality-based requirements*

Acetic acid	Heptane
Acetone	Isobutyl acetate
Anisole	Isopropyl acetate
1-Butanol	Methyl acetate
2-Butanol	3-Methyl-1-butanol
Butyl acetate	Methylethylketone
tert-Butylmethyl ether	Methylisobutylketone
Cumene	2-Methyl-l-propanol
Dimethyl sulfoxide	Pentane
Ethanol	1-Pentanol
Ethyl acetate	1-Propanol
Ethyl ether	2-Propanol
Ethyl formate	Propyl acetate
Formic acid	

4.4. SOLVENTS FOR WHICH NO ADEQUATE TOXICOLOGICAL DATA WAS FOUND

The following solvents (Table 4) may also be of interest to manufacturers of excipients, active substances, or medicinal products. However, no adequate toxicological data on which to base a PDE was found. Manufacturers should supply justification for residual levels of these solvents in pharmaceutical products.

Table 4. – *Solvents for which no adequate toxicological data was found*

1,1-Diethoxypropane	Methylisopropylketone
1,1-Dimethoxymethane	Methyltetrahydrofuran
2,2-Dimethoxypropane	Petroleum ether
Isooctane	Trichloroacetic acid
Isopropyl ether	Trifluoroacetic acid

GLOSSARY

Genotoxic carcinogens: Carcinogens which produce cancer by affecting genes or chromosomes.

LOEL: Abbreviation for lowest-observed effect level.

Lowest-observed effect level: The lowest dose of substance in a study or group of studies that produces biologically significant increases in frequency or severity of any effects in the exposed humans or animals.

Modifying factor: A factor determined by professional judgement of a toxicologist and applied to bioassay data to relate that data safely to humans.

Neurotoxicity: The ability of a substance to cause adverse effects on the nervous system.

NOEL: Abbreviation for *no-observed-effect level.*

No-observed-effect level: The highest dose of substance at which there are no biologically significant increases in frequency or severity of any effects in the exposed humans or animals.

PDE: Abbreviation for *permitted daily exposure.*

Permitted daily exposure: The maximum acceptable intake per day of residual solvent in pharmaceutical products.

Reversible toxicity: The occurrence of harmful effects that are caused by a substance and which disappear after exposure to the substance ends.

Strongly suspected human carcinogen: A substance for which there is no epidemiological evidence of carcinogenesis but there are positive genotoxicity data and clear evidence of carcinogenesis in rodents.

Teratogenicity: The occurrence of structural malformations in a developing foetus when a substance is administered during pregnancy.

APPENDIX 1. LIST OF SOLVENTS INCLUDED IN THE GUIDELINE

Solvent	Other Names	Structure	Class
Acetic acid	Ethanoic acid	CH_3COOH	Class 3
Acetone	2-Propanone Propan-2-one	CH_3COCH_3	Class 3
Acetonitrile		CH_3CN	Class 2
Anisole	Methoxybenzene	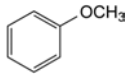	Class 3
Benzene	Benzol		Class 1
1-Butanol	*n*-Butyl alcohol Butan-1-ol	$CH_3[CH_2]_3OH$	Class 3
2-Butanol	*sec*-Butyl alcohol Butan-2-ol	$CH_3CH_2CH(OH)CH_3$	Class 3
Butyl acetate	Acetic acid butyl ester	$CH_3COO[CH_2]_3CH_3$	Class 3
tert-Butylmethyl ether	2-Methoxy-2-methylpropane	$(CH_3)_3COCH_3$	Class 3
Carbon tetrachloride	Tetrachloromethane	CCl_4	Class 1
Chlorobenzene		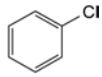	Class 2
Chloroform	Trichloromethane	$CHCl_3$	Class 2
Cumene	Isopropylbenzene (1-Methylethyl)benzene	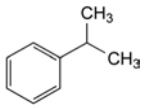	Class 3
Cyclohexane	Hexamethylene		Class 2
1,2-Dichloroethane	*sym*-Dichloroethane Ethylene dichloride Ethylene chloride	CH_2ClCH_2Cl	Class 1
1,1-Dichloroethene	1,1-Dichloroethylene Vinylidene chloride	$H_2C{=}CCl_2$	Class 1
1,2-Dichloroethene	1,2-Dichloroethylene Acetylene dichloride	$ClHC{=}CHCl$	Class 2
Dichloromethane	Methylene chloride	CH_2Cl_2	Class 2
1,2-Dimethoxyethane	Ethyleneglycol dimethyl ether Monoglyme Dimethyl cellosolve	$H_3COCH_2CH_2OCH_3$	Class 2
N,N-Dimethylacetamide	DMA	$CH_3CON(CH_3)_2$	Class 2
N,N-Dimethylformamide	DMF	$HCON(CH_3)_2$	Class 2
Dimethyl sulfoxide	Methylsulfinylmethane Methyl sulfoxide DMSO	$(CH_3)_2SO$	Class 3
1,4-Dioxane	*p*-Dioxane [1,4]Dioxane		Class 2
Ethanol	Ethyl alcohol	CH_3CH_2OH	Class 3
2-Ethoxyethanol	Cellosolve	$CH_3CH_2OCH_2CH_2OH$	Class 2
Ethyl acetate	Acetic acid ethyl ester	$CH_3COOCH_2CH_3$	Class 3
Ethyleneglycol	1,2-Dihydroxyethane 1,2-Ethanediol	$HOCH_2CH_2OH$	Class 2
Ethyl ether	Diethyl ether Ethoxyethane 1,1′-Oxybisethane	$CH_3CH_2OCH_2CH_3$	Class 3
Ethyl formate	Formic acid ethyl ester	$HCOOCH_2CH_3$	Class 3
Formamide	Methanamide	$HCONH_2$	Class 2
Formic acid		$HCOOH$	Class 3

Solvent	Other Names	Structure	Class
Heptane	*n*-Heptane	$CH_3[CH_2]_5CH_3$	Class 3
Hexane	*n*-Hexane	$CH_3[CH_2]_4CH_3$	Class 2
Isobutyl acetate	Acetic acid isobutyl ester	$CH_3COOCH_2CH(CH_3)_2$	Class 3
Isopropyl acetate	Acetic acid isopropyl ester	$CH_3COOCH(CH_3)_2$	Class 3
Methanol	Methyl alcohol	CH_3OH	Class 2
2-Methoxyethanol	Methyl cellosolve	$CH_3OCH_2CH_2OH$	Class 2
Methyl acetate	Acetic acid methyl ester	CH_3COOCH_3	Class 3
3-Methyl-1-butanol	Isoamyl alcohol Isopentyl alcohol 3-Methylbutan-1-ol	$(CH_3)_2CHCH_2CH_2OH$	Class 3
Methylbutylketone	2-Hexanone Hexan-2-one	$CH_3[CH_2]_3COCH_3$	Class 2
Methylcyclohexane	Cyclohexylmethane	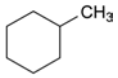	Class 2
Methylethylketone	2-Butanone MEK Butan-2-one	$CH_3CH_2COCH_3$	Class 3
Methylisobutylketone	4-Methylpentan-2-one 4-Methyl-2-pentanone MIBK	$CH_3COCH_2CH(CH_3)_2$	Class 3
2-Methyl-1-propanol	Isobutyl alcohol 2-Methylpropan-1-ol	$(CH_3)_2CHCH_2OH$	Class 3
N-Methylpyrrolidone	1-Methylpyrrolidin-2-one 1-Methyl-2-pyrrolidinone		Class 2
Nitromethane		CH_3NO_2	Class 2
Pentane	*n*-Pentane	$CH_3[CH_2]_3CH_3$	Class 3
1-Pentanol	Amyl alcohol Pentan-1-ol Pentyl alcohol	$CH_3[CH_2]_3CH_2OH$	Class 3
1-Propanol	Propan-1-ol Propyl alcohol	$CH_3CH_2CH_2OH$	Class 3
2-Propanol	Propan-2-ol Isopropyl alcohol	$(CH_3)_2CHOH$	Class 3
Propyl acetate	Acetic acid propyl ester	$CH_3COOCH_2CH_2CH_3$	Class 3
Pyridine			Class 2
Sulfonane	Tetrahydrothiophene 1,1-dioxide		Class 2
Tetrahydrofuran	Tetramethylene oxide Oxacyclopentane		Class 2
Tetralin	1,2,3,4-Tetrahydronaphthalene	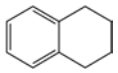	Class 2
Toluene	Methylbenzene	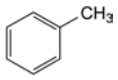	Class 2
1,1,1-Trichloroethane	Methylchloroform	CH_3CCl_3	Class 1
1,1,2-Trichloroethene	Trichloroethene	$HClC{=}CCl_2$	Class 2
Xylene*	Dimethybenzene Xylol	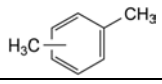	Class 2

*usually 60 per cent *m*-xylene, 14 per cent *p*-xylene, 9 per cent *o*-xylene with 17 per cent ethyl benzene.

APPENDIX 2. ADDITIONAL BACKGROUND

A2.1. ENVIRONMENTAL REGULATION OF ORGANIC VOLATILE SOLVENTS

Several of the residual solvents frequently used in the production of pharmaceuticals are listed as toxic chemicals in Environmental Health Criteria (EHC) monographs and the Integrated Risk Information System (IRIS). The objectives of such groups as the International Programme on Chemical Safety (IPCS), the United States Environmental Protection Agency (USEPA) and the United States Food and Drug Administration (USFDA) include the determination of acceptable exposure levels. The goal is protection of human health and maintenance of environmental integrity against the possible deleterious effects of chemicals resulting from long-term environmental exposure. The methods involved in the estimation of maximum safe exposure limits are usually based on long-term studies. When long-term study data are unavailable, shorter term study data can be used with modification of the approach such as use of larger safety factors. The approach described therein relates primarily to long-term or life-time exposure of the general population in the ambient environment, i.e. ambient air, food, drinking water and other media.

A2.2. RESIDUAL SOLVENTS IN PHARMACEUTICALS

Exposure limits in this guideline are established by referring to methodologies and toxicity data described in EHC and IRIS monographs. However, some specific assumptions about residual solvents to be used in the synthesis and formulation of pharmaceutical products should be taken into account in establishing exposure limits. They are:

1) Patients (not the general population) use pharmaceuticals to treat their diseases or for prophylaxis to prevent infection or disease.

2) The assumption of life-time patient exposure is not necessary for most pharmaceutical products but may be appropriate as a working hypothesis to reduce risk to human health.

3) Residual solvents are unavoidable components in pharmaceutical production and will often be a part of medicinal products.

4) Residual solvents should not exceed recommended levels except in exceptional circumstances.

5) Data from toxicological studies that are used to determine acceptable levels for residual solvents should have been generated using appropriate protocols such as those described for example, by OECD and the FDA Red Book.

APPENDIX 3. METHODS FOR ESTABLISHING EXPOSURE LIMITS

The Gaylor-Kodell method of risk assessment (Gaylor, D. W. and Kodell, R. L. Linear Interpolation algorithm for low dose assessment of toxic substance. J. Environ. Pathology, 4, 305, 1980) is appropriate for Class 1 carcinogenic solvents. Only in cases where reliable carcinogenicity data are available should extrapolation by the use of mathematical models be applied to setting exposure limits. Exposure limits for Class 1 solvents could be determined with the use of a large safety factor (i.e., 10 000 to 100 000) with respect to the no-observed-effect level (NOEL). Detection and quantification of these solvents should be by state-of-the-art analytical techniques.

Acceptable exposure levels in this guideline for Class 2 solvents were established by calculation of PDE values according to the procedures for setting exposure limits in pharmaceuticals (*Pharmacopeial Forum*, Nov-Dec 1989), and the method adopted by IPCS for Assessing Human Health Risk of Chemicals (*Environmental Health Criteria 170*, WHO, 1994). These methods are similar to those used by the USEPA (IRIS) and the USFDA (*Red Book*) and others. The method is outlined here to give a better understanding of the origin of the PDE values. It is not necessary to perform these calculations in order to use the PDE values tabulated in Section 4 of this document.

PDE is derived from the no-observed-effect level (NOEL), or the lowest-observed effect level (LOEL), in the most relevant animal study as follows:

$$\mathrm{PDE} = \frac{\mathrm{NOEL} \times \mathrm{Weight\ Adjustment}}{\mathrm{F1} \times \mathrm{F2} \times \mathrm{F3} \times \mathrm{F4} \times \mathrm{F5}}$$

The PDE is derived preferably from a NOEL. If no NOEL is obtained, the LOEL may be used. Modifying factors proposed here, for relating the data to humans, are the same kind of "uncertainty factors" used in Environmental Health Criteria (*Environmental Health Criteria* 170, World Health Organization, Geneva, 1994), and "modifying factors" or "safety factors" in *Pharmacopoeial Forum*. The assumption of 100 per cent systemic exposure is used in all calculations regardless of route of administration.

The modifying factors are as follows:

F1 = A factor to account for extrapolation between species

- F1 = 2 for extrapolation from dogs to humans
- F1 = 2.5 for extrapolation from rabbits to humans
- F1 = 3 for extrapolation from monkeys to humans
- F1 = 5 for extrapolation from rats to humans
- F1 = 10 for extrapolation from other animals to humans
- F1 = 12 for extrapolation from mice to humans

F1 takes into account the comparative surface area: body weight ratios for the species concerned and for man. Surface area (S) is calculated as:

$$S = km^{0.67}$$

in which m = body mass, and the constant k has been taken to be 10. The body weight used in the equation are those shown below in Table A3.-1.

Table A3.-1. – *Values used in the calculations in this document*

Rat body weight	425 g
Pregnant rat body weight	330 g
Mouse body weight	28 g
Pregnant mouse body weight	30 g
Guinea-pig body weight	500 g
Rhesus monkey body weight	2.5 kg
Rabbit body weight (pregnant or not)	4 kg
Beagle dog body weight	11.5 kg
Rat respiratory volume	290 L/day
Mouse respiratory volume	43 L/day
Rabbit respiratory volume	1440 L/day
Guinea-pig respiratory volume	430 L/day
Human respiratory volume	28800 L/day
Dog respiratory volume	9000 L/day
Monkey respiratory volume	1150 L/day
Mouse water consumption	5 mL/day
Rat water consumption	30 mL/day
Rat food consumption	30 g/day

F2 = A factor of 10 to account for variability between individuals. A factor of 10 is generally given for all organic solvents, and 10 is used consistently in this guideline.

F3 = A variable factor to account for toxicity studies of short-term exposure.

- F3 = 1 for studies that last at least one half-lifetime (1 year for rodents or rabbits; 7 years for cats, dogs and monkeys).
- F3 = 1 for reproductive studies in which the whole period of organogenesis is covered.
- F3 = 2 for a 6 month study in rodents, or a 3.5 year study in non-rodents.
- F3 = 5 for a 3 month study in rodents, or a 2 year study in non-rodents.
- F3 = 10 for studies of a shorter duration.

In all cases, the higher factor has been used for study durations between the time points, e.g. a factor of 2 for a 9 month rodent study.

F4 = A factor that may be applied in cases of severe toxicity, e.g. non-genotoxic carcinogenicity, neurotoxicity or teratogenicity. In studies of reproductive toxicity, the following factors are used:

- F4 = 1 for foetal toxicity associated with maternal toxicity
- F4 = 5 for foetal toxicity without maternal toxicity
- F4 = 5 for a teratogenic effect with maternal toxicity
- F4 = 10 for a teratogenic effect without maternal toxicity

F5 = A variable factor that may be applied if the no-effect level was not established.

When only a LOEL is available, a factor of up to 10 can be used depending on the severity of the toxicity.

The weight adjustment assumes an arbitrary adult human body weight for either sex of 50 kg. This relatively low weight provides an additional safety factor against the standard weights of 60 kg or 70 kg that are often used in this type of calculation. It is recognised that some adult patients weigh less than 50 kg; these patients are considered to be accommodated by the built-in safety factors used to determine a PDE. If the solvent was present in a formulation specifically intended for paediatric use, an adjustment for a lower body weight would be appropriate.

As an example of the application of this equation, consider the toxicity study of acetonitrile in mice that is summarised in *Pharmeuropa*, Vol. 9. No. 1, Supplement, April 1997, page S24. The NOEL is calculated to be 50.7 mg kg^{-1} day^{-1}. The PDE for acetonitrile in this study is calculated as follows:

$$\mathrm{PDE} = \frac{50.7\mathrm{mg\ kg^{-1}\ day^{-1}} \times 50\ \mathrm{kg}}{12 \times 10 \times 5 \times 1 \times 1} = 4.22\ \mathrm{mg\ day^{-1}}$$

In this example,

F1 = 12 to account for the extrapolation from mice to humans

F2 = 10 to account for differences between individual humans

F3 = 5 because the duration of the study was only 13 weeks

F4 = 1 because no severe toxicity was encountered

F5 = 1 because the no-effect level was determined

The equation for an ideal gas, $PV = nRT$, is used to convert concentrations of gases used in inhalation studies from units of ppm to units of mg/L or mg/m^3. Consider as an example the rat reproductive toxicity study by inhalation of carbon tetrachloride (molecular weight 153.84) summarised in *Pharmeuropa*, Vol. 9, No. 1, Supplement, April 1997, page S9.

$$\frac{n}{V} = \frac{P}{\mathrm{R}T} = \frac{300 \times 10^{-6}\ \mathrm{atm} \times 153\,840\ \mathrm{mg\ mol^{-1}}}{0.082\ \mathrm{L\ atm\ K^{-1} mol^{-1}} \times 298\ \mathrm{K}}$$

$$= \frac{46.15\ \mathrm{mg}}{24.45\ \mathrm{L}} = 1.89\ \mathrm{mg/L}$$

The relationship 1000 L = 1 m^3 is used to convert to mg/m^3.

01/2008:50500

5.5. ALCOHOLIMETRIC TABLES

The general formula agreed by the Council of the European Communities in its Directive of 27 July 1976 on alcoholimetry served as the basis for establishing the following tables.

% *V/V*	% *m/m*	ρ_{20} (kg/m³)
0.0	0.0	998.20
0.1	0.08	998.05
0.2	0.16	997.90
0.3	0.24	997.75
0.4	0.32	997.59
0.5	0.40	997.44
0.6	0.47	997.29
0.7	0.55	997.14
0.8	0.63	996.99
0.9	0.71	996.85
1.0	0.79	996.70
1.1	0.87	996.55
1.2	0.95	996.40
1.3	1.03	996.25
1.4	1.11	996.11
1.5	1.19	995.96
1.6	1.27	995.81
1.7	1.35	995.67
1.8	1.43	995.52
1.9	1.51	995.38
2.0	1.59	995.23
2.1	1.67	995.09
2.2	1.75	994.94
2.3	1.82	994.80
2.4	1.90	994.66
2.5	1.98	994.51
2.6	2.06	994.37
2.7	2.14	994.23
2.8	2.22	994.09
2.9	2.30	993.95
3.0	2.38	993.81
3.1	2.46	993.66
3.2	2.54	993.52
3.3	2.62	993.38
3.4	2.70	993.24
3.5	2.78	993.11
3.6	2.86	992.97
3.7	2.94	992.83
3.8	3.02	992.69
3.9	3.10	992.55
4.0	3.18	992.41
4.1	3.26	992.28
4.2	3.34	992.14
4.3	3.42	992.00
4.4	3.50	991.87
4.5	3.58	991.73
4.6	3.66	991.59
4.7	3.74	991.46
4.8	3.82	991.32
4.9	3.90	991.19
5.0	3.98	991.06
5.1	4.06	990.92
5.2	4.14	990.79
5.3	4.22	990.65
5.4	4.30	990.52
5.5	4.38	990.39
5.6	4.46	990.26
5.7	4.54	990.12
5.8	4.62	989.99
5.9	4.70	989.86
6.0	4.78	989.73
6.1	4.86	989.60
6.2	4.95	989.47
6.3	5.03	989.34
6.4	5.11	989.21
6.5	5.19	989.08
6.6	5.27	988.95
6.7	5.35	988.82
6.8	5.43	988.69
6.9	5.51	988.56
7.0	5.59	988.43
7.1	5.67	988.30
7.2	5.75	988.18
7.3	5.83	988.05
7.4	5.91	987.92
7.5	5.99	987.79
7.6	6.07	987.67
7.7	6.15	987.54
7.8	6.23	987.42
7.9	6.32	987.29
8.0	6.40	987.16

% *V/V*	% *m/m*	ρ_{20} (kg/m³)
8.1	6.48	987.04
8.2	6.56	986.91
8.3	6.64	986.79
8.4	6.72	986.66
8.5	6.80	986.54
8.6	6.88	986.42
8.7	6.96	986.29
8.8	7.04	986.17
8.9	7.12	986.05
9.0	7.20	985.92
9.1	7.29	985.80
9.2	7.37	985.68
9.3	7.45	985.56
9.4	7.53	985.44
9.5	7.61	985.31
9.6	7.69	985.19
9.7	7.77	985.07
9.8	7.85	984.95
9.9	7.93	984.83
10.0	8.01	984.71
10.1	8.10	984.59
10.2	8.18	984.47
10.3	8.26	984.35
10.4	8.34	984.23
10.5	8.42	984.11
10.6	8.50	983.99
10.7	8.58	983.88
10.8	8.66	983.76
10.9	8.75	983.64
11.0	8.83	983.52
11.1	8.91	983.40
11.2	8.99	983.29
11.3	9.07	983.17
11.4	9.15	983.05
11.5	9.23	982.94
11.6	9.32	982.82
11.7	9.40	982.70
11.8	9.48	982.59
11.9	9.56	982.47
12.0	9.64	982.35
12.1	9.72	982.24
12.2	9.80	982.12
12.3	9.89	982.01

% *V/V*	% *m/m*	ρ_{20} (kg/m³)
12.4	9.97	981.89
12.5	10.05	981.78
12.6	10.13	981.67
12.7	10.21	981.55
12.8	10.29	981.44
12.9	10.37	981.32
13.0	10.46	981.21
13.1	10.54	981.10
13.2	10.62	980.98
13.3	10.70	980.87
13.4	10.78	980.76
13.5	10.87	980.64
13.6	10.95	980.53
13.7	11.03	980.42
13.8	11.11	980.31
13.9	11.19	980.19
14.0	11.27	980.08
14.1	11.36	979.97
14.2	11.44	979.86
14.3	11.52	979.75
14.4	11.60	979.64
14.5	11.68	979.52
14.6	11.77	979.41
14.7	11.85	979.30
14.8	11.93	979.19
14.9	12.01	979.08
15.0	12.09	978.97
15.1	12.17	978.86
15.2	12.26	978.75
15.3	12.34	978.64
15.4	12.42	978.53
15.5	12.50	978.42
15.6	12.59	978.31
15.7	12.67	978.20
15.8	12.75	978.09
15.9	12.83	977.98
16.0	12.91	977.87
16.1	13.00	977.76
16.2	13.08	977.65
16.3	13.16	977.55
16.4	13.24	977.44
16.5	13.32	977.33
16.6	13.41	977.22

% *V/V*	% *m/m*	ρ_{20} (kg/m³)
16.7	13.49	977.11
16.8	13.57	977.00
16.9	13.65	976.89
17.0	13.74	976.79
17.1	13.82	976.68
17.2	13.90	976.57
17.3	13.98	976.46
17.4	14.07	976.35
17.5	14.15	976.25
17.6	14.23	976.14
17.7	14.31	976.03
17.8	14.40	975.92
17.9	14.48	975.81
18.0	14.56	975.71
18.1	14.64	975.60
18.2	14.73	975.49
18.3	14.81	975.38
18.4	14.89	975.28
18.5	14.97	975.17
18.6	15.06	975.06
18.7	15.14	974.95
18.8	15.22	974.85
18.9	15.30	974.74
19.0	15.39	974.63
19.1	15.47	974.52
19.2	15.55	974.42
19.3	15.63	974.31
19.4	15.72	974.20
19.5	15.80	974.09
19.6	15.88	973.99
19.7	15.97	973.88
19.8	16.05	973.77
19.9	16.13	973.66
20.0	16.21	973.56
20.1	16.30	973.45
20.2	16.38	973.34
20.3	16.46	973.24
20.4	16.55	973.13
20.5	16.63	973.02
20.6	16.71	972.91
20.7	16.79	972.80
20.8	16.88	972.70
20.9	16.96	972.59
21.0	17.04	972.48
21.1	17.13	972.37
21.2	17.21	972.27
21.3	17.29	972.16
21.4	17.38	972.05
21.5	17.46	971.94
21.6	17.54	971.83
21.7	17.62	971.73
21.8	17.71	971.62
21.9	17.79	971.51
22.0	17.87	971.40
22.1	17.96	971.29
22.2	18.04	971.18
22.3	18.12	971.08
22.4	18.21	970.97
22.5	18.29	970.86
22.6	18.37	970.75
22.7	18.46	970.64
22.8	18.54	970.53
22.9	18.62	970.42
23.0	18.71	970.31
23.1	18.79	970.20
23.2	18.87	970.09
23.3	18.96	969.98
23.4	19.04	969.87
23.5	19.13	969.76
23.6	19.21	969.65
23.7	19.29	969.54
23.8	19.38	969.43
23.9	19.46	969.32
24.0	19.54	969.21
24.1	19.63	969.10
24.2	19.71	968.99
24.3	19.79	968.88
24.4	19.88	968.77
24.5	19.96	968.66
24.6	20.05	968.55
24.7	20.13	968.43
24.8	20.21	968.32
24.9	20.30	968.21
25.0	20.38	968.10
25.1	20.47	967.99

% *V/V*	% *m/m*	ρ_{20} (kg/m³)
25.2	20.55	967.87
25.3	20.63	967.76
25.4	20.72	967.65
25.5	20.80	967.53
25.6	20.88	967.42
25.7	20.97	967.31
25.8	21.05	967.19
25.9	21.14	967.08
26.0	21.22	966.97
26.1	21.31	966.85
26.2	21.39	966.74
26.3	21.47	966.62
26.4	21.56	966.51
26.5	21.64	966.39
26.6	21.73	966.28
26.7	21.81	966.16
26.8	21.90	966.05
26.9	21.98	965.93
27.0	22.06	965.81
27.1	22.15	965.70
27.2	22.23	965.58
27.3	22.32	965.46
27.4	22.40	965.35
27.5	22.49	965.23
27.6	22.57	965.11
27.7	22.65	964.99
27.8	22.74	964.88
27.9	22.82	964.76
28.0	22.91	964.64
28.1	22.99	964.52
28.2	23.08	964.40
28.3	23.16	964.28
28.4	23.25	964.16
28.5	23.33	964.04
28.6	23.42	963.92
28.7	23.50	963.80
28.8	23.59	963.68
28.9	23.67	963.56
29.0	23.76	963.44
29.1	23.84	963.32
29.2	23.93	963.20
29.3	24.01	963.07
29.4	24.10	962.95

% *V/V*	% *m/m*	ρ_{20} (kg/m³)
29.5	24.18	962.83
29.6	24.27	962.71
29.7	24.35	962.58
29.8	24.44	962.46
29.9	24.52	962.33
30.0	24.61	962.21
30.1	24.69	962.09
30.2	24.78	961.96
30.3	24.86	961.84
30.4	24.95	961.71
30.5	25.03	961.59
30.6	25.12	961.46
30.7	25.20	961.33
30.8	25.29	961.21
30.9	25.38	961.08
31.0	25.46	960.95
31.1	25.55	960.82
31.2	25.63	960.70
31.3	25.72	960.57
31.4	25.80	960.44
31.5	25.89	960.31
31.6	25.97	960.18
31.7	26.06	960.05
31.8	26.15	959.92
31.9	26.23	959.79
32.0	26.32	959.66
32.1	26.40	959.53
32.2	26.49	959.40
32.3	26.57	959.27
32.4	26.66	959.14
32.5	26.75	959.01
32.6	26.83	958.87
32.7	26.92	958.74
32.8	27.00	958.61
32.9	27.09	958.47
33.0	27.18	958.34
33.1	27.26	958.20
33.2	27.35	958.07
33.3	27.44	957.94
33.4	27.52	957.80
33.5	27.61	957.66
33.6	27.69	957.53
33.7	27.78	957.39

% *V/V*	% *m/m*	ρ_{20} (kg/m³)
33.8	27.87	957.26
33.9	27.95	957.12
34.0	28.04	956.98
34.1	28.13	956.84
34.2	28.21	956.70
34.3	28.30	956.57
34.4	28.39	956.43
34.5	28.47	956.29
34.6	28.56	956.15
34.7	28.65	956.01
34.8	28.73	955.87
34.9	28.82	955.73
35.0	28.91	955.59
35.1	28.99	955.45
35.2	29.08	955.30
35.3	29.17	955.16
35.4	29.26	955.02
35.5	29.34	954.88
35.6	29.43	954.73
35.7	29.52	954.59
35.8	29.60	954.44
35.9	29.69	954.30
36.0	29.78	954.15
36.1	29.87	954.01
36.2	29.95	953.86
36.3	30.04	953.72
36.4	30.13	953.57
36.5	30.21	953.42
36.6	30.30	953.28
36.7	30.39	953.13
36.8	30.48	952.98
36.9	30.56	952.83
37.0	30.65	952.69
37.1	30.74	952.54
37.2	30.83	952.39
37.3	30.92	952.24
37.4	31.00	952.09
37.5	31.09	951.94
37.6	31.18	951.79
37.7	31.27	951.63
37.8	31.35	951.48
37.9	31.44	951.33

% *V/V*	% *m/m*	ρ_{20} (kg/m³)
38.0	31.53	951.18
38.1	31.62	951.02
38.2	31.71	950.87
38.3	31.79	950.72
38.4	31.88	950.56
38.5	31.97	950.41
38.6	32.06	950.25
38.7	32.15	950.10
38.8	32.24	949.94
38.9	32.32	949.79
39.0	32.41	949.63
39.1	32.50	949.47
39.2	32.59	949.32
39.3	32.68	949.16
39.4	32.77	949.00
39.5	32.86	948.84
39.6	32.94	948.68
39.7	33.03	948.52
39.8	33.12	948.37
39.9	33.21	948.21
40.0	33.30	948.05
40.1	33.39	947.88
40.2	33.48	947.72
40.3	33.57	947.56
40.4	33.66	947.40
40.5	33.74	947.24
40.6	33.83	947.08
40.7	33.92	946.91
40.8	34.01	946.75
40.9	34.10	946.58
41.0	34.19	946.42
41.1	34.28	946.26
41.2	34.37	946.09
41.3	34.46	945.93
41.4	34.55	945.76
41.5	34.64	945.59
41.6	34.73	945.43
41.7	34.82	945.26
41.8	34.91	945.09
41.9	35.00	944.93
42.0	35.09	944.76
42.1	35.18	944.59
42.2	35.27	944.42

% *V/V*	% *m/m*	ρ_{20} (kg/m³)
42.3	35.36	944.25
42.4	35.45	944.08
42.5	35.54	943.91
42.6	35.63	943.74
42.7	35.72	943.57
42.8	35.81	943.40
42.9	35.90	943.23
43.0	35.99	943.06
43.1	36.08	942.88
43.2	36.17	942.71
43.3	36.26	942.54
43.4	36.35	942.37
43.5	36.44	942.19
43.6	36.53	942.02
43.7	36.62	941.84
43.8	36.71	941.67
43.9	36.80	941.49
44.0	36.89	941.32
44.1	36.98	941.14
44.2	37.07	940.97
44.3	37.16	940.79
44.4	37.25	940.61
44.5	37.35	940.43
44.6	37.44	940.26
44.7	37.53	940.08
44.8	37.62	939.90
44.9	37.71	939.72
45.0	37.80	939.54
45.1	37.89	939.36
45.2	37.98	939.18
45.3	38.08	939.00
45.4	38.17	938.82
45.5	38.26	938.64
45.6	38.35	938.46
45.7	38.44	938.28
45.8	38.53	938.10
45.9	38.62	937.91
46.0	38.72	937.73
46.1	38.81	937.55
46.2	38.90	937.36
46.3	38.99	937.18
46.4	39.08	937.00
46.5	39.18	936.81
46.6	39.27	936.63
46.7	39.36	936.44
46.8	39.45	936.26
46.9	39.54	936.07
47.0	39.64	935.88
47.1	39.73	935.70
47.2	39.82	935.51
47.3	39.91	935.32
47.4	40.00	935.14
47.5	40.10	934.95
47.6	40.19	934.76
47.7	40.28	934.57
47.8	40.37	934.38
47.9	40.47	934.19
48.0	40.56	934.00
48.1	40.65	933.81
48.2	40.75	933.62
48.3	40.84	933.43
48.4	40.93	933.24
48.5	41.02	933.05
48.6	41.12	932.86
48.7	41.21	932.67
48.8	41.30	932.47
48.9	41.40	932.28
49.0	41.49	932.09
49.1	41.58	931.90
49.2	41.68	931.70
49.3	41.77	931.51
49.4	41.86	931.31
49.5	41.96	931.12
49.6	42.05	930.92
49.7	42.14	930.73
49.8	42.24	930.53
49.9	42.33	930.34
50.0	42.43	930.14
50.1	42.52	929.95
50.2	42.61	929.75
50.3	42.71	929.55
50.4	42.80	929.35
50.5	42.90	929.16
50.6	42.99	928.96
50.7	43.08	928.76
50.8	43.18	928.56

% *V/V*	% *m/m*	ρ_{20} (kg/m³)
50.9	43.27	928.36
51.0	43.37	928.16
51.1	43.46	927.96
51.2	43.56	927.77
51.3	43.65	927.57
51.4	43.74	927.36
51.5	43.84	927.16
51.6	43.93	926.96
51.7	44.03	926.76
51.8	44.12	926.56
51.9	44.22	926.36
52.0	44.31	926.16
52.1	44.41	925.95
52.2	44.50	925.75
52.3	44.60	925.55
52.4	44.69	925.35
52.5	44.79	925.14
52.6	44.88	924.94
52.7	44.98	924.73
52.8	45.07	924.53
52.9	45.17	924.32
53.0	45.26	924.12
53.1	45.36	923.91
53.2	45.46	923.71
53.3	45.55	923.50
53.4	45.65	923.30
53.5	45.74	923.09
53.6	45.84	922.88
53.7	45.93	922.68
53.8	46.03	922.47
53.9	46.13	922.26
54.0	46.22	922.06
54.1	46.32	921.85
54.2	46.41	921.64
54.3	46.51	921.43
54.4	46.61	921.22
54.5	46.70	921.01
54.6	46.80	920.80
54.7	46.90	920.59
54.8	46.99	920.38
54.9	47.09	920.17
55.0	47.18	919.96

% *V/V*	% *m/m*	ρ_{20} (kg/m³)
55.1	47.28	919.75
55.2	47.38	919.54
55.3	47.47	919.33
55.4	47.57	919.12
55.5	47.67	918.91
55.6	47.77	918.69
55.7	47.86	918.48
55.8	47.96	918.27
55.9	48.06	918.06
56.0	48.15	917.84
56.1	48.25	917.63
56.2	48.35	917.42
56.3	48.45	917.20
56.4	48.54	916.99
56.5	48.64	916.77
56.6	48.74	916.56
56.7	48.84	916.35
56.8	48.93	916.13
56.9	49.03	915.91
57.0	49.13	915.70
57.1	49.23	915.48
57.2	49.32	915.27
57.3	49.42	915.05
57.4	49.52	914.83
57.5	49.62	914.62
57.6	49.72	914.40
57.7	49.81	914.18
57.8	49.91	913.97
57.9	50.01	913.75
58.0	50.11	913.53
58.1	50.21	913.31
58.2	50.31	913.09
58.3	50.40	912.87
58.4	50.50	912.65
58.5	50.60	912.43
58.6	50.70	912.22
58.7	50.80	912.00
58.8	50.90	911.78
58.9	51.00	911.55
59.0	51.10	911.33
59.1	51.19	911.11
59.2	51.29	910.89
59.3	51.39	910.67

% *V/V*	% *m/m*	ρ_{20} (kg/m³)
59.4	51.49	910.45
59.5	51.59	910.23
59.6	51.69	910.01
59.7	51.79	909.78
59.8	51.89	909.56
59.9	51.99	909.34
60.0	52.09	909.11
60.1	52.19	908.89
60.2	52.29	908.67
60.3	52.39	908.44
60.4	52.49	908.22
60.5	52.59	908.00
60.6	52.69	907.77
60.7	52.79	907.55
60.8	52.89	907.32
60.9	52.99	907.10
61.0	53.09	906.87
61.1	53.19	906.64
61.2	53.29	906.42
61.3	53.39	906.19
61.4	53.49	905.97
61.5	53.59	905.74
61.6	53.69	905.51
61.7	53.79	905.29
61.8	53.89	905.06
61.9	53.99	904.83
62.0	54.09	904.60
62.1	54.19	904.37
62.2	54.30	904.15
62.3	54.40	903.92
62.4	54.50	903.69
62.5	54.60	903.46
62.6	54.70	903.23
62.7	54.80	903.00
62.8	54.90	902.77
62.9	55.00	902.54
63.0	55.11	902.31
63.1	55.21	902.08
63.2	55.31	901.85
63.3	55.41	901.62
63.4	55.51	901.39
63.5	55.61	901.15
63.6	55.72	900.92

% *V/V*	% *m/m*	ρ_{20} (kg/m³)
63.7	55.82	900.69
63.8	55.92	900.46
63.9	56.02	900.23
64.0	56.12	899.99
64.1	56.23	899.76
64.2	56.33	899.53
64.3	56.43	899.29
64.4	56.53	899.06
64.5	56.64	898.83
64.6	56.74	898.59
64.7	56.84	898.36
64.8	56.94	898.12
64.9	57.05	897.89
65.0	57.15	897.65
65.1	57.25	897.42
65.2	57.36	897.18
65.3	57.46	896.94
65.4	57.56	896.71
65.5	57.67	896.47
65.6	57.77	896.23
65.7	57.87	896.00
65.8	57.98	895.76
65.9	58.08	895.52
66.0	58.18	895.28
66.1	58.29	895.05
66.2	58.39	894.81
66.3	58.49	894.57
66.4	58.60	894.33
66.5	58.70	894.09
66.6	58.81	893.85
66.7	58.91	893.61
66.8	59.01	893.37
66.9	59.12	893.13
67.0	59.22	892.89
67.1	59.33	892.65
67.2	59.43	892.41
67.3	59.54	892.17
67.4	59.64	891.93
67.5	59.74	891.69
67.6	59.85	891.45
67.7	59.95	891.20
67.8	60.06	890.96
67.9	60.16	890.72

% *V/V*	% *m/m*	ρ_{20} (kg/m³)
68.0	60.27	890.48
68.1	60.37	890.23
68.2	60.48	889.99
68.3	60.58	889.75
68.4	60.69	889.50
68.5	60.80	889.26
68.6	60.90	889.01
68.7	61.01	888.77
68.8	61.11	888.52
68.9	61.22	888.28
69.0	61.32	888.03
69.1	61.43	887.79
69.2	61.54	887.54
69.3	61.64	887.29
69.4	61.75	887.05
69.5	61.85	886.80
69.6	61.96	886.55
69.7	62.07	886.31
69.8	62.17	886.06
69.9	62.28	885.81
70.0	62.39	885.56
70.1	62.49	885.31
70.2	62.60	885.06
70.3	62.71	884.82
70.4	62.81	884.57
70.5	62.92	884.32
70.6	63.03	884.07
70.7	63.13	883.82
70.8	63.24	883.57
70.9	63.35	883.32
71.0	63.46	883.06
71.1	63.56	882.81
71.2	63.67	882.56
71.3	63.78	882.31
71.4	63.89	882.06
71.5	63.99	881.81
71.6	64.10	881.55
71.7	64.21	881.30
71.8	64.32	881.05
71.9	64.43	880.79
72.0	64.53	880.54
72.1	64.64	880.29
72.2	64.75	880.03
72.3	64.86	879.78
72.4	64.97	879.52
72.5	65.08	879.27
72.6	65.19	879.01
72.7	65.29	878.75
72.8	65.40	878.50
72.9	65.51	878.24
73.0	65.62	877.99
73.1	65.73	877.73
73.2	65.84	877.47
73.3	65.95	877.21
73.4	66.06	876.96
73.5	66.17	876.70
73.6	66.28	876.44
73.7	66.39	876.18
73.8	66.50	875.92
73.9	66.61	875.66
74.0	66.72	875.40
74.1	66.83	875.14
74.2	66.94	874.88
74.3	67.05	874.62
74.4	67.16	874.36
74.5	67.27	874.10
74.6	67.38	873.84
74.7	67.49	873.58
74.8	67.60	873.32
74.9	67.71	873.06
75.0	67.82	872.79
75.1	67.93	872.53
75.2	68.04	872.27
75.3	68.15	872.00
75.4	68.26	871.74
75.5	68.38	871.48
75.6	68.49	871.21
75.7	68.60	870.95
75.8	68.71	870.68
75.9	68.82	870.42
76.0	68.93	870.15
76.1	69.04	869.89
76.2	69.16	869.62
76.3	69.27	869.35
76.4	69.38	869.09

% *V/V*	% *m/m*	ρ_{20} (kg/m³)
76.5	69.49	868.82
76.6	69.61	868.55
76.7	69.72	868.28
76.8	69.83	868.02
76.9	69.94	867.75
77.0	70.06	867.48
77.1	70.17	867.21
77.2	70.28	866.94
77.3	70.39	866.67
77.4	70.51	866.40
77.5	70.62	866.13
77.6	70.73	865.86
77.7	70.85	865.59
77.8	70.96	865.32
77.9	71.07	865.05
78.0	71.19	864.78
78.1	71.30	864.50
78.2	71.41	864.23
78.3	71.53	863.96
78.4	71.64	863.69
78.5	71.76	863.41
78.6	71.87	863.14
78.7	71.98	862.86
78.8	72.10	862.59
78.9	72.21	862.31
79.0	72.33	862.04
79.1	72.44	861.76
79.2	72.56	861.49
79.3	72.67	861.21
79.4	72.79	860.94
79.5	72.90	860.66
79.6	73.02	860.38
79.7	73.13	860.10
79.8	73.25	859.83
79.9	73.36	859.55
80.0	73.48	859.27
80.1	73.60	858.99
80.2	73.71	858.71
80.3	73.83	858.43
80.4	73.94	858.15
80.5	74.06	857.87
80.6	74.18	857.59
80.7	74.29	857.31
80.8	74.41	857.03
80.9	74.53	856.75
81.0	74.64	856.46
81.1	74.76	856.18
81.2	74.88	855.90
81.3	74.99	855.62
81.4	75.11	855.33
81.5	75.23	855.05
81.6	75.34	854.76
81.7	75.46	854.48
81.8	75.58	854.19
81.9	75.70	853.91
82.0	75.82	853.62
82.1	75.93	853.34
82.2	76.05	853.05
82.3	76.17	852.76
82.4	76.29	852.48
82.5	76.41	852.19
82.6	76.52	851.90
82.7	76.64	851.61
82.8	76.76	851.32
82.9	76.88	851.03
83.0	77.00	850.74
83.1	77.12	850.45
83.2	77.24	850.16
83.3	77.36	849.87
83.4	77.48	849.58
83.5	77.60	849.29
83.6	77.72	848.99
83.7	77.84	848.70
83.8	77.96	848.41
83.9	78.08	848.11
84.0	78.20	847.82
84.1	78.32	847.53
84.2	78.44	847.23
84.3	78.56	846.93
84.4	78.68	846.64
84.5	78.80	846.34
84.6	78.92	846.05
84.7	79.04	845.75
84.8	79.16	845.45
84.9	79.28	845.15

% *V/V*	% *m/m*	ρ_{20} (kg/m³)
85.0	79.40	844.85
85.1	79.53	844.55
85.2	79.65	844.25
85.3	79.77	843.95
85.4	79.89	843.65
85.5	80.01	843.35
85.6	80.14	843.05
85.7	80.26	842.75
85.8	80.38	842.44
85.9	80.50	842.14
86.0	80.63	841.84
86.1	80.75	841.53
86.2	80.87	841.23
86.3	81.00	840.92
86.4	81.12	840.62
86.5	81.24	840.31
86.6	81.37	840.00
86.7	81.49	839.70
86.8	81.61	839.39
86.9	81.74	839.08
87.0	81.86	838.77
87.1	81.99	838.46
87.2	82.11	838.15
87.3	82.24	837.84
87.4	82.36	837.52
87.5	82.49	837.21
87.6	82.61	836.90
87.7	82.74	836.59
87.8	82.86	836.27
87.9	82.99	835.96
88.0	83.11	835.64
88.1	83.24	835.32
88.2	83.37	835.01
88.3	83.49	834.69
88.4	83.62	834.37
88.5	83.74	834.05
88.6	83.87	833.73
88.7	84.00	833.41
88.8	84.13	833.09
88.9	84.25	832.77
89.0	84.38	832.45
89.1	84.51	832.12
89.2	84.64	831.80
89.3	84.76	831.48
89.4	84.89	831.15
89.5	85.02	830.82
89.6	85.15	830.50
89.7	85.28	830.17
89.8	85.41	829.84
89.9	85.54	829.51
90.0	85.66	829.18
90.1	85.79	828.85
90.2	85.92	828.52
90.3	86.05	828.19
90.4	86.18	827.85
90.5	86.31	827.52
90.6	86.44	827.18
90.7	86.57	826.85
90.8	86.71	826.51
90.9	86.84	826.17
91.0	86.97	825.83
91.1	87.10	825.49
91.2	87.23	825.15
91.3	87.36	824.81
91.4	87.49	824.47
91.5	87.63	824.13
91.6	87.76	823.78
91.7	87.89	823.44
91.8	88.02	823.09
91.9	88.16	822.74
92.0	88.29	822.39
92.1	88.42	822.04
92.2	88.56	821.69
92.3	88.69	821.34
92.4	88.83	820.99
92.5	88.96	820.63
92.6	89.10	820.28
92.7	89.23	819.92
92.8	89.37	819.57
92.9	89.50	819.21
93.0	89.64	818.85
93.1	89.77	818.49
93.2	89.91	818.12
93.3	90.05	817.76
93.4	90.18	817.40
93.5	90.32	817.03

% *V/V*	% *m/m*	ρ_{20} (kg/m³)
93.6	90.46	816.66
93.7	90.59	816.30
93.8	90.73	815.93
93.9	90.87	815.55
94.0	91.01	815.18
94.1	91.15	814.81
94.2	91.29	814.43
94.3	91.43	814.06
94.4	91.56	813.68
94.5	91.70	813.30
94.6	91.84	812.92
94.7	91.98	812.54
94.8	92.13	812.15
94.9	92.27	811.77
95.0	92.41	811.38
95.1	92.55	810.99
95.2	92.69	810.60
95.3	92.83	810.21
95.4	92.98	809.82
95.5	93.12	809.42
95.6	93.26	809.02
95.7	93.41	808.63
95.8	93.55	808.23
95.9	93.69	807.82
96.0	93.84	807.42
96.1	93.98	807.01
96.2	94.13	806.61
96.3	94.27	806.20
96.4	94.42	805.78
96.5	94.57	805.37
96.6	94.71	804.96
96.7	94.86	804.54
96.8	95.01	804.12
96.9	95.16	803.70
97.0	95.31	803.27
97.1	95.45	802.85
97.2	95.60	802.42
97.3	95.75	801.99
97.4	95.90	801.55
97.5	96.05	801.12
97.6	96.21	800.68
97.7	96.36	800.24
97.8	96.51	799.80
97.9	96.66	799.35
98.0	96.81	798.90
98.1	96.97	798.45
98.2	97.12	798.00
98.3	97.28	797.54
98.4	97.43	797.08
98.5	97.59	796.62
98.6	97.74	796.15
98.7	97.90	795.68
98.8	98.06	795.21
98.9	98.22	794.73
99.0	98.38	794.25
99.1	98.53	793.77
99.2	98.69	793.28
99.3	98.86	792.79
99.4	99.02	792.30
99.5	99.18	791.80
99.6	99.34	791.29
99.7	99.50	790.79
99.8	99.67	790.28
99.9	99.83	789.76
100.0	100.0	789.24

01/2008:50600

5.6. ASSAY OF INTERFERONS

The following chapter is published for information.

1. INTRODUCTION

Monographs on human interferons generally contain a bioassay based on the inhibitory activity of the interferon on the cytopathic action of a virus on a cell line in culture. In most cases, however, the virus, cell line and the assay details are not specified, in order to allow the appropriate flexibility, where the monograph covers more than one sub-class of interferon.

The present text is intended to provide outline information for the analyst on how to design, optimise and validate such an assay once an appropriate combination of cell line and cytopathic virus has been identified. A detailed procedure for a particular cytopathic antiviral assay is described as an example of a suitable method, together with information on other virus-cell line combinations and guidance on how to adapt and validate the procedure for these other combinations.

2. ANTIVIRAL (CYTOPATHIC EFFECT REDUCTION) ASSAYS

The antiviral assay of human interferons is based on the induction of a cellular response in human cells, which prevents or reduces the cytopathic effect of an infectious virus. The potency of interferon is estimated by comparing its protective effect against a viral cytopathic effect with the same effect of the appropriate reference preparation calibrated in International Units.

3. INTERFERON ASSAY USING Hep2c CELLS AND INFECTIOUS ENCEPHALOMYOCARDITIS VIRUS

The antiviral assay of human interferons described is of the cytopathic effect reduction type. It uses human Hep2c cells infected by encephalomyocarditis virus (EMCV) to measure the potencies of different human interferon test preparations. This assay has been used in three World Health Organization (WHO) international collaborative studies of candidate International Standards for human interferon alpha, human interferon beta and human interferon gamma and has repeatedly been demonstrated to be sensitive, reliable and reproducible for potency estimations of the different types of human interferon.

For the culture of mammalian cells, all procedures are carried out using standard operating procedures for the maintenance of such cell lines in culture. Volumes of reagents are indicated for cell cultures carried out in 75 cm^2 flasks. Other types of containers (flasks or plates) may be used but volumes must be adapted accordingly.

3.1. MAINTENANCE AND PREPARATION OF Hep2c CELLS

Hep2c cells are maintained and passaged in culture medium A.

Cells are stored as frozen stocks using standard operating procedures. Growing cells may be maintained in culture up to a permitted passage number of 30, after which new cultures are established from frozen stocks.

At the beginning of the assay procedure, harvest the cells from the flasks showing 90 per cent confluent monolayers using the trypsin-treatment procedure described below.

- Remove the culture medium from the flasks.
- To each flask, add 5 mL of trypsin solution heated at 37 °C (a trypsin stock solution contains 4 mg/mL of *trypsin R* and 4 mg/mL of *sodium edetate R*; immediately before use, dilute 50 times with phosphate buffered saline). Swirl the capped flask to wash the cell monolayer. Remove the excess of trypsin solution.
- Incubate the flasks for 5 min to 10 min at 37 °C. Microscopically or visually observe the cells for signs of detachment. When viewed microscopically, the cells appear rounded up or detached and free-floating. Shake the flask vigorously to detach all the cells, add approximately 5 mL of culture medium A. Shake vigorously to yield a suspension of single cells.
- To prepare the cell suspensions for the assay procedure, carefully disperse the cells by pipetting up and down to disrupt cell aggregates, count the cells and resuspend at a concentration of 6×10^5 cells/mL.

3.2. PROPAGATION OF ENCEPHALOMYOCARDITIS VIRUS

Encephalomyocarditis virus is propagated in mouse L-929 cells in order to produce a stock of progeny virus. L-929 cells are maintained by trypsin treatment and passage as described for Hep2c cells (*NOTE: it may be necessary to substitute neonatal calf serum with foetal bovine serum if the cells show poor growth*).

Take several flasks containing confluent cultures of L-929 cells. Pour off the medium from the flasks. Inoculate with 2 mL of the EMCV suspension appropriately diluted in culture medium B so that it contains approximately 2.5×10^8 plaque forming units (PFU) per millilitre. Each flask will contain $4\text{-}6 \times 10^7$ L-929 cells and therefore the multiplicity of infection (m.o.i.) will be approximately 10 PFU/cell. Carefully swirl the virus suspension over the entire cell monolayer and return the flasks to the incubator for approximately 1 h. Maintain the medium at pH 7.4 to 7.8.

After adsorption of the EMCV, add approximately 40 mL of culture medium B to each flask and return the flasks to the incubator at 37 °C for about 30 h. Maintain the medium at pH 7.4 to 7.8 to obtain a maximum virus yield. Remove the culture fluid and store at approximately 4 °C.

Place the flasks at − 20 °C to freeze the cell monolayer. Then thaw to room temperature. Add approximately 5 mL of culture medium and shake the flask to disrupt the cell walls. Transfer the contents of each flask to the container of culture fluid. Transfer the culture fluid containing the EMCV to 50 mL plastic centrifuge tubes and centrifuge at approximately 500 *g* for about 10 min to remove cell debris. Dispense the clarified culture fluid into glass screw-capped bottles, in quantities of 20 mL, 10 mL, 5 mL, 1 mL, 0.5 mL or 0.2 mL, as appropriate. Store at − 70 °C. Larger volumes can be thawed, dispensed into smaller quantities and re-frozen when required. The EMCV stock will retain its original titre if stored permanently at approximately − 70 °C, but repeated freeze-thaw cycles or storage at higher temperatures, e.g. at approximately − 20 °C, results in progressive loss of titre.

3.3. ASSAY PROCEDURE

3.3.1. Determination of the dose-response range

Preparation of the solutions

Dilute the appropriate standard for interferon (for example a specific WHO sub-type interferon standard) in culture medium A, in 10-fold dose increments, to give doses covering the range of 1000 - 0.001 IU/mL. Carry out the assay procedure in 96-well microtitre plates. To each well add 100 µL of culture medium A. Add approximately 100 µL of each dilution of the reference preparation to each well except for those intended for virus controls. Using a multichannel pipette set at 100 µL, mix the contents of the wells.

Dispensing of the cell suspension

Pour the cell suspension of Hep2c cells, which has been adjusted to contain approximately 6×10^5 cells/mL of culture medium A, into a plastic Petri-dish. Dispense the cell suspension from the Petri-dish into each well of the microtitre plates, using a multichannel pipette set at 100 µL.

Incubate the plates for about 24 h in an incubator set at 37 °C and 5 per cent CO_2.

Viral infection

At this stage, using an inverted microscope, check that the monolayers of Hep2c cells are confluent, that they show a relatively even distribution of cells, that they have correct morphology and that they are healthy.

Remove most of the culture medium from the wells by inverting the plate and shaking it and blotting on a paper towel (proceed in an identical way when discarding fluids from micro-titre plates as described later). Dilute the EMCV stock with fresh culture medium A to a titre of approximately 3×10^7 PFU/mL (*NOTE: each plate requires approximately 20 mL of diluted virus, plus 5 per cent to 10 per cent of extra volume*). Dispense the diluted suspension from a 9 cm sterile Petri-dish using a multichannel pipette set at 200 µL to all wells including virus controls, but excluding cell controls. Add approximately 200 µL of culture medium A without virus to each of the cell control wells.

Return the plates to the incubator set at 37 °C and 5 per cent CO_2 for approximately 24 h.

Staining

Examine the plates microscopically to check that the EMCV has caused a cytopathic effect (c.p.e.) in the virus controls. The time interval for maximum c.p.e. may vary from one assay to the next because of inherent variation of Hep2c cells to virus challenge over a given period of continuous cultivation.

Remove most of the culture medium from the wells by discarding into an appropriate decontaminating solution (sodium hypochlorite is suitable). Dispense *phosphate buffered saline pH 7.4 R* into each well. Discard the *phosphate buffered saline pH 7.4 R* into a decontaminating solution. Dispense into each well 150 µL of staining solution. Stain the cells for approximately 30 min at room temperature. Discard the staining solution into a decontaminating solution. Dispense approximately 150 µL of fixing solution. Fix for 10 min at room temperature. Discard the fixing solution into a decontaminating solution and wash the cell monolayers by immersing the assay plates in a plastic box containing running water. Discard the water and superficially dry the plates with paper towels. Dry the assay plates at 20 °C to 37 °C until all moisture has evaporated.

Add 150 µL of *0.1 M sodium hydroxide* to each well. Elute the stain by gentle agitation of the plates or by hitting them against the palm of the hand. Make sure that the stain is evenly distributed in all wells before making spectrophotometric readings.

Read the absorbance at 610 nm to 620 nm, using a microtitre plate reader, taking as a blank a well or a column of wells containing no cells and approximately 150 µL of *0.1 M sodium hydroxide*.

Estimate the concentrations of interferon standard that give the maximum and minimum reduction of cytopathic effect. This is the dose response corresponding to the working range of the assay.

3.3.2. Assay procedure

Carry out the assay as described above, using:

- as test solutions, the substance to be examined, diluted in two-fold increments with culture medium A to give nominal concentrations covering the working range of the assay,
- as reference solutions, the appropriate standard for interferon (for example, a specific WHO sub-type interferon) in culture medium A, diluted in two-fold increments to give nominal concentrations covering the working range of the assay.

3.3.3. Data analysis

Results of the cytopathic effect reduction assay generally fit a sigmoidal dose-response curve, when the interferon concentration (the log of the reciprocal of the interferon dilution) is plotted versus stain absorbance.

Plot the interferon concentration (log reciprocal of dilution) versus the stain absorbance for the interferon reference preparation and for the interferon test solutions. Using the linear portion of the curve, calculate the concentration of interferon in the sample by comparing the responses for test and reference solutions, using the usual statistical methods for a parallel line assay.

4. VALIDATION OF OTHER PROCEDURES

4.1. CHOICE OF CELL LINE AND VIRUS

A number of other combinations of cell line and virus have been used in anti-viral assays for interferons. For example, EMCV has been used in combination with the A549 epithelial lung carcinoma cell line, Semliki Forest virus or Sindbis virus have been used with human fibroblasts, and vesicular stomatitis virus has been used with either human diploid fibroblasts, the human amnion WISH cell line or the Madin-Darby bovine kidney cell line. In each case the choice of the cell line/virus combination is usually based on that which gives the most sensitive response to the interferon preparation to be assayed, and gives parallel responses when comparing the test preparation and interferon standard.

4.2. CHOICE OF RESPONSE

The staining procedure described above measures remaining viable cells. A number of other responses have been used, including methyl violet or crystal violet staining, or the thiazolyl blue (MTT) conversion procedure. In each case, the method is selected on the basis of producing a suitably linear and sensitive relationship between response colour and viable cell count.

4.3. STATISTICAL VALIDATION

As with all parallel line bioassays, the assay must satisfy the usual statistical criteria of linearity of response, parallelism and variance.

4.4. VALIDATION OF ASSAY LAYOUT

As with all microtitre plate assay procedures, attention must be given to validating the assay layout. In particular, bias due to non-random pipetting order or plate edge effects must be investigated and eliminated, by randomising the assay layout, or by avoiding the use of edge wells.

REAGENTS AND CULTURE MEDIA

Culture medium A (10 per cent neonatal calf serum)

RPMI 1640 culture medium, supplemented with antibiotics if necessary (penicillin 10 000 IU/mL; streptomycin 10 ng/mL)	450 mL
L-Glutamine, 200 mM, sterile	5 mL
Neonatal calf serum	50 mL

Culture medium B (2 per cent foetal bovine serum)

RPMI 1640 culture medium, supplemented with antibiotics if necessary (penicillin 10 000 IU/mL; streptomycin 10 ng/mL)	490 mL
L-Glutamine, 200 mM, sterile	5 mL
Foetal bovine serum	10 mL

Staining solution

Naphthalene black	0.5 g
Acetic acid, glacial	90 mL
Sodium acetate, anhydrous	8.2 g
Water	to 1000 mL

Fixing solution

Formaldehyde, 40 per cent	100 mL
Acetic acid, glacial	90 mL
Sodium acetate, anhydrous	8.2 g
Water	to 1000 mL

01/2008:50700

5.7. TABLE OF PHYSICAL CHARACTERISTICS OF RADIONUCLIDES MENTIONED IN THE EUROPEAN PHARMACOPOEIA

The following table is given to complete the general monograph *Radiopharmaceutical preparations (0125)*.

The values are obtained from the database of the National Nuclear Data Center (NNDC) at Brookhaven National Laboratory, Upton. N.Y., USA, directly accessible via Internet at the address: 'http://www.nndc.bnl.gov/nndc/nudat/radform.html'.

In case another source of information is preferred (more recent values), this source is explicitly mentioned.

Other data sources:

* DAMRI (Département des Applications et de la Métrologie des Rayonnements Ionisants, CEA Gif-sur-Yvette, France),

** PTB (Physikalisch-Technische Bundesanstalt, Braunschweig, Germany),

*** NPL (National Physical Laboratory, Teddington, Middlesex, UK).

The uncertainty of the half-lives are given in parentheses. In principle the digits in parentheses are the standard uncertainty of the corresponding last digits of the indicated numerical value ('Guide to the Expression of Uncertainty in Measurement', International Organization for Standardization (ISO), 1993, ISBN 92-67-10188-9).

The following abbreviations are used:

e_A = Auger electrons,

ce = conversion electrons,

β^- = electrons,

β^+ = positrons,

γ = gamma rays,

X = X-rays.

Radionuclide	Half-life	Electronic emission			Photon emission		
		Type	Energy (MeV)	Emission probability (per 100 disintegrations)	Type	Energy (MeV)	Emission probability (per 100 disintegrations)
Tritium (^{3}H)	*12.33 (6) years	*β^-	*0.006 (I) (max: 0.019)	*100			
Carbon-11 (^{11}C)	20.385 (20) min	β^+	0.386 (I) (max: 0.960)	99.8	γ	0.511	199.5 (II)
Nitrogen-13 (^{13}N)	9.965 (4) min	β^+	0.492 (I) (max: 1.198)	99.8	γ	0.511	199.6 (II)
Oxygen-15 (^{15}O)	122.24 (16) s	β^+	0.735 (I) (max: 1.732)	99.9	γ	0.511	199.8 (II)
Fluorine-18 (^{18}F)	109.77 (5) min	β^+	0.250 (I) (max: 0.633)	96.7	γ	0.511	193.5 (II)
Phosphorus-32 (^{32}P)	14.26 (4) days	β^-	0.695 (I) (max: 1.71)	100			
Phosphorus-33 (^{33}P)	25.34 (12) days	β^-	0.076 (I) (max: 0.249)	100			
Sulfur-35 (^{35}S)	87.51 (12) days	β^-	0.049 (I) (max: 0.167)	100			
Chromium-51 (^{51}Cr)	27.7025 (24) days	e_A	0.004	67	X	0.005	22.3
					γ	0.320	9.9
Cobalt-56 (^{56}Co)	77.27 (3) days	e_A	0.006	47	X	0.006-0.007	25
		β^+	0.179 (I)	0.9	γ	0.511	38.0 (II)
			0.631 (I)	18.1		0.847	100.0
						1.038	14.1
						1.175	2.2
						1.238	66.1
						1.360	4.3
						1.771	15.5
						2.015	3.0
						2.035	7.8
						2.598	17.0
						3.202	3.1
						3.253	7.6

(I) Mean energy of the β spectrum.
(II) Maximum emission probability corresponding to a total annihilation in the source per 100 disintegrations.

Radionuclide	Half-life	Electronic emission			Photon emission		
		Type	Energy (MeV)	Emission probability (per 100 disintegrations)	Type	Energy (MeV)	Emission probability (per 100 disintegrations)
Cobalt-57 (^{57}Co)	271.79 (9) days	e_A+ce	0.006-0.007	177.4	X	0.006-0.007	57
		ce	0.014	7.4	γ	0.014	9.2
			0.115	1.8		0.122	85.6
			0.129	1.3		0.136	10.7
						0.692	0.15
Cobalt-58 (^{58}Co)	70.86 (7) days	e_A	0.006	49.4	X	0.006-0.007	26.3
		β^+	0.201 (I)	14.9	γ	0.511	29.9 (II)
						0.811	99.4
						0.864	0.7
						1.675	0.5
Cobalt-60 (^{60}Co)	5.2714 (5) years	β^-	0.096 (I) (max: 0.318)	99.9	γ	1.173	100.0
						1.333	100.0
Gallium-66 (^{66}Ga)	9.49 (7) hours	e_A	0.008	21	X	0.009-0.010	19.1
		β^+	0.157 (I)	1	γ	0.511	112 (II)
			0.331 (I)	0.7		0.834	5.9
			0.397 (I)	3.8		1.039	37
			0.782 (I)	0.3		1.333	1.2
			1.90 (I)	50		1.919	2.1
						2.190	5.6
						2.423	1.9
						2.752	23.4
						3.229	1.5
						3.381	1.5
						3.792	1.1
						4.086	1.3
						4.295	4.1
						4.807	1.8
Gallium-67 (^{67}Ga)	3.2612 (6) days	e_A	0.008	62	X	0.008-0.010	57
		ce	0.082-0.084	30.4	γ	0.091-0.093	42.4
			0.090-0.092	3.6		0.185	21.2
			0.175	0.3		0.209	2.4
						0.300	16.8
						0.394	4.7
						0.888	0.15
Germanium-68 (^{68}Ge) in equilibrium with Gallium-68 (^{68}Ga)	270.82 (27) days	e_A	0.008	42.4	X	0.009-0.010	44.1
		β^+	0.353 (I)	1.2	γ	0.511	178.3
	(^{68}Ga: 67.629 (24) min)		0.836 (I)	88.0		1.077	3.0

(I) Mean energy of the β spectrum.
(II) Maximum emission probability corresponding to a total annihilation in the source per 100 disintegrations.

Radionuclide	Half-life	Electronic emission			Photon emission		
		Type	Energy (MeV)	Emission probability (per 100 disintegrations)	Type	Energy (MeV)	Emission probability (per 100 disintegrations)
Gallium-68 (^{68}Ga)	67.629 (24) min	e_A	0.008	5.1	X	0.009-0.010	4.7
		β^+	0.353 (I)	1.2	γ	0.511	178.3
			0.836 (I)	88.0		1.077	3.0
Krypton-81m (^{81m}Kr)	13.10 (3) s	ce	0.176	26.4	X	0.012-0.014	17.0
			0.189	4.6			
					γ	0.190	67.6
Rubidium-81 (^{81}Rb) in equilibrium with Krypton-81m (^{81m}Kr)	4.576 (5) hours	e_A	0.011	31.3	X	0.013-0.014	57.2
		ce	0.176	25.0	γ	0.190	64
			0.188	4.3		0.446	23.2
						0.457	3.0
		β^+	0.253 (I)	1.8		0.510	5.3
			0.447 (I)	25.0		0.511	54.2
	(^{81m}Kr: 13.10 (3) s)					0.538	2.2
Strontium-89 (^{89}Sr) in equilibrium with Yttrium-89m (^{89m}Y)	50.53 (7) days (^{89m}Y: 16.06 (4) s)	β^-	0.583 (I) (max: 1.492)	99.99	γ	0.909	0.01
Strontium-90 (^{90}Sr) in equilibrium with Yttrium-90 (^{90}Y)	28.74 (4) years (^{90}Y: 64.10 (8) hours)	β^-	0.196 (I) (max: 0.546)	100			
Yttrium-90 (^{90}Y)	64.10 (8) hours	β^-	0.934 (I) (max: 2.280)	100			
Molybdene-99 (^{99}Mo) in equilibrium with Technetium-99m (^{99m}Tc)	65.94 (1) hours	β^-	0.133 (I)	16.4	X	0.018-0.021	3.6
			0.290 (I)	1.1			
			0.443 (I)	82.4	γ	0.041	1.1
						0.141	4.5
						0.181	6
						0.366	1.2
	(^{99m}Tc: 6.01 (1) hours)					0.740	12.1
						0.778	4.3
Technetium-99m (^{99m}Tc)	6.01 (1) hours	ce	0.002	74	X	0.018-0.021	7.3
		e_A	0.015	2.1	γ	0.141	89.1
		ce	0.120	9.4			
			0.137-0.140	1.3			
Technetium-99 (^{99}Tc)	2.11×10^5 years	β^-	0.085 (I) (max: 0.294)	100			

(I) Mean energy of the β spectrum.
(II) Maximum emission probability corresponding to a total annihilation in the source per 100 disintegrations.

5. General texts

Radionuclide	Half-life	Electronic emission			Photon emission		
		Type	Energy (MeV)	Emission probability (per 100 disintegrations)	Type	Energy (MeV)	Emission probability (per 100 disintegrations)
Ruthenium-103 (^{103}Ru) in equilibrium with Rhodium-103m (^{103m}Rh)	39.26 (2) days	e_A+ce	0.017	12	X	0.020-0.023	9.0
		ce	0.030-0.039	88.3	γ	0.497	91
						0.610	5.8
		β⁻	0.031 (I)	6.6			
	(^{103m}Rh: 56.114 (20) min)		0.064 (I)	92.2			
Indium-110 (^{110}In)	4.9 (1) hours	e_A	0.019	13.4	X	0.023-0.026	70.5
					γ	0.642	25.9
						0.658	98.3
						0.885	92.9
						0.938	68.4
						0.997	10.5
Indium-110m (^{110m}In)	69.1 (5) min	e_A	0.019	5.3	X	0.023-0.026	27.8
		β⁺	1.015 (I)	61	γ	0.511	123.4 (II)
						0.658	97.8
						2.129	2.1
Indium-111 (^{111}In)	2.8047 (5) days	e_A	0.019	15.6	X	0.003	6.9
						0.023-0.026	82.3
		ce	0.145	7.8			
			0.167-0.171	1.3	γ	0.171	90.2
			0.219	4.9		0.245	94.0
			0.241-0.245	1.0			
Indium-114m (^{114m}In) in equilibrium with Indium-114 (^{114}In)	49.51 (1) days	ce	0.162	40	X	0.023-0.027	36.3
			0.186-0.190	40			
					γ	0.190	15.6
		*β⁻	0.777 (I) (max: 1.985)	95		0.558	3.2
	(^{114}In: 71.9 (1) s)					0.725	3.2
Tellurium-121m (^{121m}Te) in equilibrium with Tellure-121 (^{121}Te)	154.0 (7) days	e_A	0.003	88.0	X	0.026-0.031	50.5
			0.022-0.023	7.4			
					γ	0.212	81.4
		ce	0.050	33.2		1.102	2.5
	(^{121}Te: 19.16 (5) days)		0.077	40.0			
			0.180	6.1			
Tellurium-121 (^{121}Te)	**19.16 (5) days	e_A	0.022	11.6	X	0.026-0.030	75.6
					γ	0.470	1.4
						0.508	17.7
						0.573	80.3

(I) Mean energy of the β spectrum.
(II) Maximum emission probability corresponding to a total annihilation in the source per 100 disintegrations.

Radionuclide	Half-life	Electronic emission			Photon emission		
		Type	Energy (MeV)	Emission probability (per 100 disintegrations)	Type	Energy (MeV)	Emission probability (per 100 disintegrations)
Iodine-123 (^{123}I)	13.27 (8) hours	e_A	0.023	12.3	X	0.004	9.3
						0.027-0.031	86.6
		ce	0.127	13.6			
			0.154	1.8	γ	0.159	83.3
			0.158	0.4		0.346	0.1
						0.440	0.4
						0.505	0.3
						0.529	1.4
						0.538	0.4
Iodine-125 (^{125}I)	59.402 (14) days	e_A+ce	0.004	80	X	0.004	15.5
			0.023-0.035	33		0.027	114
						0.031	26
					γ	0.035	6.7
Iodine-126 (^{126}I)	13.11 (5) days	e_A	0.023	6	X	0.027-0.031	42.2
		ce	0.354	0.5	γ	0.388	34
			0.634	0.1		0.491	2.9
						0.511	2.3 (II)
		β^-	0.109 (I)	3.6		0.666	33
			0.290 (I)	32.1		0.754	4.2
			0.459 (I)	8.0		0.880	0.8
						1.420	0.3
		β^+	0.530 (I)	1			
Iodine-131 (^{131}I)	8.02070 (11) days	ce	0.46	3.5	X	0.029-0.030	3.9
			0.330	1.6			
					γ	0.080	2.6
		β^-	0.069 (I)	2.1		0.284	6.1
			0.097 (I)	7.3		0.365	81.7
			0.192 (I)	89.9		0.637	7.2
						0.723	1.8
Xenon-131m (^{131m}Xe)	11.84 (7) days	e_A	0.025	6.8	X	0.004	8.3
						0.030	44.0
		ce	0.129	61		0.034	10.2
			0.159	28.5			
			0.163	8.3	γ	0.164	2.0
Iodine-133 (^{133}I) (decays to radioactive Xenon-133)	20.8 (1) hours	β^-	0.140 (I)	3.8	γ	0.530	87
			0.162 (I)	3.2		0.875	4.5
			0.299 (I)	4.2		1.298	2.4
			0.441 (I)	83			

(I) Mean energy of the β spectrum.
(II) Maximum emission probability corresponding to a total annihilation in the source per 100 disintegrations.

Radionuclide	Half-life	Electronic emission			Photon emission		
		Type	Energy (MeV)	Emission probability (per 100 disintegrations)	Type	Energy (MeV)	Emission probability (per 100 disintegrations)
Xenon-133 (^{133}Xe)	5.243 (1) days	e_A	0.026	5.8	X	0.004	6.3
						0.031	40.3
		ce	0.045	55.1		0.035	9.4
			0.075-0.080	9.9			
					γ	0.080	38.3
		β⁻	0.101 (1)	99.0			
Xenon-133m (^{133m}Xe) (decays to radioactive Xenon-133)	2.19 (1) days	e_A	0.025	7	X	0.004	7.8
						0.030	45.9
		ce	0.199	64.0		0.034	10.6
			0.228	20.7			
			0.232	4.6	γ	0.233	10.0
Iodine-135 (^{135}I) (decays to radioactive Xenon-135)	6.57 (2) hours	β⁻	0.140 (1)	7.4	γ	*0.527	13.8
			0.237 (1)	8		0.547	7.2
			0.307 (1)	8.8		0.837	6.7
			0.352 (1)	21.9		1.039	8.0
			0.399 (1)	8		1.132	22.7
			0.444 (1)	7.5		1.260	28.9
			0.529 (1)	23.8		1.458	8.7
						1.678	9.6
						1.791	7.8
Xenon-135 (^{135}Xe)	9.14 (2) hours	ce	0.214	5.5	X	0.031-0.035	5.0
		β⁻	0.171	3.1	γ	0.250	90.2
			0.308	96.0		0.608	2.9
Caesium-137 (^{137}Cs) in equilibrium with Barium-137m (^{137m}Ba)	30.04 (3) years	e_A	0.026	0.8	X	0.005	1
						0.032-0.036	7
		ce	0.624	8.0			
			0.656	1.4	γ	0.662	85.1
		β⁻	0.174 (1)	94.4			
	(^{137m}Ba: 2.552 (1) min)		0.416 (1)	5.6			
Thallium-200 (^{200}Tl)	26.1 (1) hours	ce	0.285	3.4	X	0.010	32.0
			0.353	1.4		0.069-0.071	63.3
						0.08	17.5
		β⁺	0.495 (1)	0.3			
					γ	0.368	87.2
						0.579	13.8
						0.828	10.8
						1.206	29.9
						1.226	3.4
						1.274	3.3
						1.363	3.4
						1.515	4.0

(I) Mean energy of the β spectrum.
(II) Maximum emission probability corresponding to a total annihilation in the source per 100 disintegrations.

Radionuclide	Half-life	Electronic emission			Photon emission		
		Type	Energy (MeV)	Emission probability (per 100 dis-integrations)	Type	Energy (MeV)	Emission probability (per 100 dis-integrations)
Lead-201 (^{201}Pb) (decays to radioactive Thallium-201)	9.33 (3) hours	e_A	0.055	3	X	0.070-0.073	69
						0.083	19
		ce	0.246	8.5			
			0.276	2	γ	0.331	79
			0.316	2.3		0.361	9.9
						0.406	2.0
						0.585	3.6
						0.692	4.3
						0.767	3.2
						0.826	2.4
						0.908	5.7
						0.946	7.9
						1.099	1.8
						1.277	1.6
Thallium-201 (^{201}Tl)	72.912 (17) hours	ce	0.016-0.017	17.7	X	0.010	46.0
			0.027-0.029	4.1		0.069-0.071	73.7
			0.052	7.2		0.080	20.4
			0.084	15.4			
			0.153	2.6	γ	0.135	2.6
						0,167	10.0
Thallium-202 (^{202}Tl)	12.23 (2) days	e_A	0.054	2.8	X	0.010	31.0
						0.069-0.071	61.6
		ce	0.357	2.4		0.080	17.1
					γ	0.440	91.4
Lead-203 (^{203}Pb)	51.873 (9) hours	e_A	0.055	3.0	X	0.010	37.0
						0.071-0.073	69.6
		ce	0.194	13.3		0.083	19.4
					γ	0.279	80.8
						0.401	3.4

(I) Mean energy of the β spectrum.
(II) Maximum emission probability corresponding to a total annihilation in the source per 100 disintegrations.

01/2014:50800

5.8. PHARMACOPOEIAL HARMONISATION

This general chapter is included for guidance of users.

It provides information on the degree of harmonisation of various general chapters and monographs of the European Pharmacopoeia and those of the Japanese Pharmacopoeia and United States Pharmacopeia.

This information reflects:

- for general methods, the status observed for a given edition of the corresponding regional texts and any notification of regulatory acceptance by ICH (International Conference on Harmonisation);
- for monographs on excipients, the decision taken by the 3 regional pharmacopoeias when the harmonised text was signed off.

However, it remains the ultimate responsibility of the user to verify the current content of the texts in force in the respective pharmacopoeias.

The chapter does not affect in any way the status of the monographs and general chapters as the authoritative reference in any case of doubt or dispute where compliance with the European Pharmacopoeia is required.

The European Pharmacopoeia Commission recognises the utility of working with other pharmacopoeial bodies to develop harmonised monographs and general chapters. Such harmonisation is fully compatible with the declared aims of the Commission and has benefits of different kinds, notably the simplification and rationalisation of quality control methods and licensing procedures. Such harmonisation also enhances the benefits of the work of ICH and the Veterinary International Cooperation on Harmonisation (VICH) since some of the guidelines developed depend on pharmacopoeial general chapters for their application.

Work on harmonisation is carried out by a well-defined but informal process in the Pharmacopoeial Discussion Group (PDG), in which the European Pharmacopoeia, the Japanese Pharmacopoeia and the United States Pharmacopeia are associated. Information is given in this general chapter on items that have been dealt with by the PDG:

- where harmonisation of general chapters is carried out, the aim is to arrive at interchangeable methods or requirements so that demonstration of compliance using a general chapter from one of the 3 pharmacopoeias implies that the same result would be obtained using the general chapter of either of the other pharmacopoeias; when a formal declaration of interchangeability has been recommended by ICH, it will be indicated in this general chapter;
- where harmonisation of monographs is carried out, the aim is to arrive at identical requirements for all attributes of a product; for some products it can be extremely difficult to achieve complete harmonisation, for example because of differences in legal status and interpretation; it has therefore appeared worthwhile to the PDG to approve and publish monographs in which as many attributes as possible are harmonised.

Information on any non-harmonised attributes/provisions and on any local requirements, i.e. attributes/provisions that are present only in the Ph. Eur. text, is included in this general chapter. The non-harmonised attributes/provisions are placed between black diamonds (♦♦) in the corresponding Ph. Eur. texts., while the local requirements are placed between white diamonds (◊◊).

The 3 pharmacopoeias have undertaken not to make unilateral changes to harmonised monographs and general chapters but rather to apply the agreed revision procedure whereby all partners adopt a revision simultaneously.

2.2.31. ELECTROPHORESIS

The following comparative commentary refers to the texts *23. SDS-Polyacrylamide Gel Electrophoresis* in the Japanese Pharmacopoeia XV and <1056> *Biotechnology-derived Articles – Polyacrylamide Gel Electrophoresis* in the United States Pharmacopeia USP31 NF26 2nd Supplement, and chapter *2.2.31. Electrophoresis* in the European Pharmacopoeia.

In the Ph. Eur. the harmonised chapter has been included as a section entitled Sodium dodecyl sulfate polyacrylamide gel electrophoresis (SDS-PAGE), within a more general chapter entitled Electrophoresis. The general chapter includes other parts: General principle, Free or moving boundary electrophoresis, Zone electrophoresis using a supporting medium, and Polyacrylamide rod gel electrophoresis, which are not within the scope of pharmacopoeial harmonisation. The corresponding parts have been placed between black diamonds (♦♦).

The above differences in the Ph. Eur. text do not affect harmonisation as the general chapter provides additional information.

The texts of the 3 pharmacopoeias are therefore considered harmonised.

2.2.47. CAPILLARY ELECTROPHORESIS

As a result of an evaluation of the texts *4. Capillary Electrophoresis* in the Japanese Pharmacopoeia XV and <1053> *Biotechnology-derived articles – Capillary Electrophoresis* in the Unites States Pharmacopoeia USP33 NF28, and chapter *2.2.47. Capillary electrophoresis* in the European Pharmacopoeia, the texts of the 3 pharmacopoeias are considered harmonised.

2.2.54. ISOELECTRIC FOCUSING

As a result of an evaluation of the texts *9. Isoelectric Focusing* in the Japanese Pharmacopoeia XV and <1054> *Biotechnology-derived articles – Isoelectric Focusing* in the Unites States Pharmacopoeia USP33 NF28, and chapter *2.2.54. Isoelectric focusing* in the European Pharmacopoeia, the texts of the 3 pharmacopoeias are considered harmonised.

2.2.55. PEPTIDE MAPPING

The following comparative commentary refers to the texts *15. Peptide Mapping* in the Japanese Pharmacopoeia XV and <1055> *Biotechnology-derived Articles – Peptide Mapping* in the United States Pharmacopeia USP31 NF26 2nd Supplement, and chapter *2.2.55. Peptide mapping* in the European Pharmacopoeia.

Validation (USP). The USP has entitled this part System Suitability. This terminology has been accepted by the 3 pharmacopoeias.

The use of peptide mapping for genetic stability evaluation (USP). This additional section does not impact harmonisation since it is used only in development.

The above differences in the USP text do not affect harmonisation.

The texts of the 3 pharmacopoeias are therefore considered harmonised.

2.2.56. AMINO ACID ANALYSIS

The following comparative commentary refers to the texts *1. Amino Acid Analysis* in the Japanese Pharmacopoeia XV and <1052> *Biotechnology-derived Articles – Amino Acid Analysis* in the United States Pharmacopeia USP31 NF26 1st Supplement, and chapter *2.2.56. Amino acid analysis* in the European Pharmacopoeia.

Methodologies of amino acid analysis: general principles (USP). The USP has replaced '6-aminoquinolyl-*N*-hydroxysuccinimidyl carbamate or *o*-phthalaldehyde' with '6-aminoquinolyl-*N*-hydroxysuccinimidyl carbonate'.

These reagents are different but compatible and the use of one or the other does not affect harmonisation.

The USP has added a detailed example to describe each method listed below:

- Method 1: post-column ninhydrin detection;
- Method 2: post-column OPA derivatisation;
- Method 3: pre-column PITC derivatisation;
- Method 4: pre-column AQC derivatisation;
- Method 5: pre-column OPA derivatisation;
- Method 6: pre-column DABS-Cl derivatisation;
- Method 7: pre-column FMOC-Cl derivatisation;
- Method 8: pre-column NBD-F derivatisation.

The above examples are given for further information and do not affect harmonisation.

The texts of the 3 pharmacopoeias are therefore considered harmonised.

2.4.14. SULFATED ASH

The following comparative commentary refers to the texts *2.44 Residue on Ignition Test* in the Japanese Pharmacopoeia XV and <281> *Residue on Ignition* in the United States Pharmacopeia USP32 NF27 1st Supplement, and chapter *2.4.14. Sulfated ash* in the European Pharmacopoeia.

The JP has added a non-harmonised introductory part, included between black diamonds, at the beginning of this chapter. It is given for further information and therefore does not affect harmonisation.

The USP text allows for the test to be performed at an ignition temperature other than 600 ± 50 °C if prescribed in an individual monograph. In the same way, a sample mass different from the usual quantity of 1-2 g can be used if prescribed in an individual monograph.

The USP has added a section, included between black diamonds, on the use of a muffle furnace and its calibration.

The above differences in the USP text do not affect harmonisation.

The texts of the 3 pharmacopoeias are therefore considered harmonised.

NOTE: ICH has declared this method interchangeable within the ICH regions.

2.6.1. STERILITY

The following comparative commentary refers to the texts *4.06 Sterility Test* in the partial revision of the Japanese Pharmacopoeia XV made official March 31, 2009, by the Ministry of Health, Labour and Welfare Ministerial Notification No. 190 and <71> *Sterility Tests* in the United States Pharmacopeia as presented in *Pharmacopeial Forum*, Volume 34(6), Interim Revision Announcement No. 6, December 1, 2008, official on May 1, 2009, and chapter *2.6.1. Sterility* in the European Pharmacopoeia.

The USP has added requirements that cover either pharmacy bulk packages of antibiotics (which are not of concern in Europe and Japan) or medical devices (which are outside the scope of the Ph. Eur. and JP). The corresponding parts, which are not within the scope of pharmacopoeial harmonisation, have been placed between black diamonds (♦♦).

The JP has deleted the requirements for 'Catgut and other surgical sutures for veterinary use' in Table 2, in the section 'Direct inoculation of the culture medium' and in Table 3. Catgut and other surgical sutures are outside the scope of the JP.

The above differences in the JP and USP texts do not affect harmonisation.

The texts of the 3 pharmacopoeias are therefore considered harmonised.

NOTE: ICH has declared this method interchangeable within the ICH regions.

2.6.12. MICROBIOLOGICAL EXAMINATION OF NON-STERILE PRODUCTS: MICROBIAL ENUMERATION TESTS

As a result of an evaluation of the texts *4.05 Microbiological Examination of Non-sterile Products: I. Microbiological Examination of Non-sterile Products – Microbial Enumeration Tests* in the Japanese Pharmacopoeia XV 1st Supplement and <61> *Microbiological Examination of Non-sterile Products: Microbial Enumeration Tests* in the United States Pharmacopeia USP30 NF25, and chapter *2.6.12. Microbiological examination of non-sterile products: microbial enumeration tests* in the European Pharmacopoeia, the texts of the 3 pharmacopoeias are considered harmonised.

NOTE: ICH has declared this method interchangeable within the ICH regions.

2.6.13. MICROBIOLOGICAL EXAMINATION OF NON-STERILE PRODUCTS: TEST FOR SPECIFIED MICRO-ORGANISMS

As a result of an evaluation of the texts *4.05 Microbiological Examination of Non-sterile Products: II. Microbiological Examination of Non-sterile Products – Test for Specified Micro-organisms* in the Japanese Pharmacopoeia XV 1st Supplement and <62> *Microbiological Examination of Non-sterile Products: Test for Specified Micro-organisms* in the United States Pharmacopeia USP30 NF25, and chapter *2.6.13. Microbiological examination of non-sterile products: test for specified micro-organisms* in the European Pharmacopoeia, the texts of the 3 pharmacopoeias are considered harmonised.

NOTE: ICH has declared this method interchangeable within the ICH regions.

2.9.1. DISINTEGRATION OF TABLETS AND CAPSULES

The following comparative commentary refers to the texts *6.09 Disintegration Test* in the Japanese Pharmacopoeia XV and <701> *Disintegration* in the United States Pharmacopeia USP32 NF27 1st Supplement, and chapter *2.9.1. Disintegration of tablets and capsules* (Test A) in the European Pharmacopoeia.

In the Ph. Eur chapter, test A corresponds to the harmonised chapter while test B does not and is intended for tablets and capsules that are greater than 18 mm long. Test B is not within the scope of pharmacopoeial harmonisation and has been placed between black diamonds (♦♦).

The JP and USP specify procedures and acceptance criteria for different types of dosage forms. The equivalent statements are included in the Ph. Eur. general monographs on dosage forms. These statements are not within the scope of pharmacopoeial harmonisation.

In addition, the JP describes an auxiliary tube, and a metal plate to secure the glass tubes. This has been placed between black diamonds (♦♦). The use of this tube and this plate may have an impact on hydrodynamics and thus may affect harmonisation.

The texts of the 3 pharmacopoeias are therefore considered harmonised.

NOTE: ICH has declared this method interchangeable within the ICH regions subject to the conditions detailed below.

For tablets and capsules larger than 18 mm long, for which a different apparatus is used, the disintegration test is not considered to be interchangeable in the 3 regions.

The test for disintegration is not considered to be interchangeable in the 3 regions for dosage forms referred to in the pharmacopoeias as *delayed-release, gastro-resistant* or *enteric-coated*.

2.9.7. FRIABILITY OF UNCOATED TABLETS

As a result of an evaluation of the texts *26. Tablet Friability Test* in the Japanese Pharmacopoeia XV and <1216> *Tablet Friability* in the United States Pharmacopeia USP31 NF26

1st Supplement, and chapter *2.9.7. Friability of uncoated tablets* in the European Pharmacopoeia, the texts of the 3 pharmacopoeias are considered harmonised.

2.9.17. TEST FOR EXTRACTABLE VOLUME OF PARENTERAL PREPARATIONS

The following comparative commentary refers to the texts *6.05 Test for Extractable Volume of Parenteral Preparations* in the Japanese Pharmacopoeia XV and <1> *Injections* in the United States Pharmacopeia USP32 NF27 1st Supplement, and chapter *2.9.17. Test for extractable volume of parenteral preparations* in the European Pharmacopoeia.

The JP has added a non-harmonised introductory part, included between black diamonds, at the beginning of this chapter. It is given for further information and does not affect harmonisation.

The USP has included this test in general chapter <1> *Injections*, under a specific part entitled *Determination of Volume of Injection in Containers*. This does not affect harmonisation.

The texts of the 3 pharmacopoeias are therefore considered harmonised.

NOTE: ICH has declared this method interchangeable within the ICH regions.

2.9.19. PARTICULATE CONTAMINATION: SUB-VISIBLE PARTICLES

The following comparative commentary refers to the texts *6.07 Insoluble Particulate Matter Test for Injections* in the Japanese Pharmacopoeia XV (corrected version dated September 2007) and <788> *Particulate Matter in Injections* in the United States Pharmacopeia USP32 NF27 2nd Supplement, and chapter *2.9.19. Particulate contamination: sub-visible particles* in the European Pharmacopoeia.

The USP specifies that system suitability can be verified using *USP Particle Count RS*. This statement is not within the scope of pharmacopoeial harmonisation. It has been placed between black diamonds (♦♦) and it does not affect harmonisation.

The JP includes a detailed section on calibration of the apparatus. In particular, requirements for the quality of particle-free water are given, which differ from those stated in the USP (see section *Reagents, Indicators and Solutions*) and in the Ph. Eur (see chapter *4.1.1*). The section on calibration is not within the scope of pharmacopoeial harmonisation. It has been placed between black diamonds (♦♦) and it does not affect harmonisation.

In addition, the JP describes more stringent acceptance criteria for parenteral preparations having a nominal volume of 100 mL. This was acknowledged by the PDG as a non-harmonised item. It has been placed between black diamonds (♦♦). The acceptance criteria for parenteral preparations having a nominal volume of 100 mL are therefore considered non-harmonised.

The texts of the 3 pharmacopoeias are therefore considered harmonised except for the acceptance criteria for parenteral preparations having a nominal volume of 100 mL.

NOTE: ICH has declared this method interchangeable within the ICH regions except the acceptance criteria for parenteral preparations having a nominal volume of 100 mL.

2.9.26. SPECIFIC SURFACE AREA BY GAS ADSORPTION

The following comparative commentary refers to the texts *3.02 Specific Surface Area by Gas Adsorption* in the Japanese Pharmacopoeia XV and <846> *Specific Surface Area* in the United States Pharmacopeia USP31 NF26 1st Supplement, and chapter *2.9.26. Specific surface area by gas adsorption* in the European Pharmacopoeia.

The JP has chosen to express all the temperatures of this chapter in degrees Celsius.

Multi-point measurement (JP). The JP does not state the meaning of the 22400 constant in the definition of the specific surface area *S* and does not require a test to determine the linearity of the method.

Single-point measurement (JP). The JP does not state the equivalent quantity of gas corresponding to the value of P/P_0, which is less precise (0.30) than in the other pharmacopoeias (0.300).

The JP does not assume the material constant *C* to be invariant.

Measurements (JP). The JP does not specify the temperature required to perform the test for either method.

The JP limits its volumetric method to classical instruments and does not take alternative instruments into account.

The above differences in the JP text might affect harmonisation.

Therefore only the texts of the Ph. Eur. and the USP are considered harmonised.

2.9.36. POWDER FLOW

The following comparative commentary refers to the texts *18. Powder Flow* in the Japanese Pharmacopoeia XV and <1174> *Powder Flow* in the United States Pharmacopeia USP31 NF26 1st Supplement, and chapter *2.9.36. Powder flow* in the European Pharmacopoeia.

Flow through an orifice (JP). The JP limits the use of orifices to classical ones and does not allow vibrators or moving orifices. A test result using the JP method will be compatible with the Ph. Eur and the USP. A Ph. Eur. or USP test result will not comply with the JP when a vibrator or moving orifice is used.

2.9.37. OPTICAL MICROSCOPY

As a result of an evaluation of the texts *3.04 Particle Size Determination* in the Japanese Pharmacopoeia XV and <776> *Optical Microscopy* in the United States Pharmacopeia USP31 NF26 2nd Supplement, and chapter *2.9.37. Optical microscopy* in the European Pharmacopoeia, the texts of the 3 pharmacopoeias are considered harmonised.

2.9.38. PARTICLE-SIZE DISTRIBUTION ESTIMATION BY ANALYTICAL SIEVING

The following comparative commentary refers to the texts *3.04 Particle Size Determination* in the Japanese Pharmacopoeia XV and <786> *Particle-size Distribution Determination by Analytical Sieving* in the United States Pharmacopeia USP31 NF26 1st Supplement, and chapter *2.9.38. Particle-size distribution estimation by analytical sieving* in the European Pharmacopoeia.

Sieving methods - Dry sieving method (JP). The JP permits any powder on the down surface of the sieve to be brushed and combined with the fraction of the next sieve.

The above difference in the JP text might affect harmonisation.

Therefore only the texts of the Ph. Eur. and the USP are considered harmonised.

5.1.4. MICROBIOLOGICAL QUALITY OF NON-STERILE PHARMACEUTICAL PREPARATIONS AND SUBSTANCES FOR PHARMACEUTICAL USE

The following comparative commentary refers to the texts *12. Microbial Attributes of Non-sterile Pharmaceutical Products* in the Japanese Pharmacopoeia XV 1st Supplement and <1111> *Microbiological Attributes of Non-sterile Pharmaceutical Products* in the United States Pharmacopeia USP30 NF25, and chapter *5.1.4. Microbiological quality of non-sterile pharmaceutical preparations and substances for pharmaceutical use* in the European Pharmacopoeia.

A special Ph. Eur. provision for oral dosage forms containing raw materials of natural origin is included within table 5.1.4.-1. Also, a reference to chapter *5.1.8* giving recommended acceptance criteria for the microbiological quality of herbal medicinal products for oral use and extracts used in their

preparation is included in the text. The corresponding parts, which are not within the scope of pharmacopoeial harmonisation, have been placed between black diamonds (♦♦).

The above differences in the Ph. Eur. text do not affect harmonisation.

The texts of the 3 pharmacopoeias are therefore considered harmonised.

NOTE: ICH has declared these texts interchangeable within the ICH regions.

ETHYLCELLULOSE (0822)

As a result of the process of pharmacopoeial harmonisation, the following reflects the agreement reached by the Ph. Eur., the JP and the USP.

Harmonised attributes

Attribute	Ph. Eur.	JP	USP
Definition	+	-	+
Identification by IR	+	-	+
Acidity/alkalinity	+	-	+
Viscosity	+	-	+
Acetaldehyde	+	-	+
Chlorides	+	-	+
Loss on drying	+	-	+
Sulfated ash	+	-	+
Assay	+	-	+
Labelling	+	-	+

Legend

+ : will adopt and implement

–: will not stipulate

Non-harmonised attributes

Characters, Heavy metals, Storage

Local requirements

Identification (compliance with limits of assay) (Ph. Eur.)

Reagents and reference materials

Each pharmacopoeia adapts the text to take account of local reference materials and reagent specifications.

(sign-off date: 27 October 2009)

HYPROMELLOSE (0348)

As a result of the process of pharmacopoeial harmonisation, the following reflects the agreement settled by the Ph. Eur., the JP and the USP.

Harmonised attributes

Attribute	Ph. Eur.	JP	USP
Definition	+	+	+
Labelling	+	+	+
Identification			
– A	+	+	+
– B	+	+	+
– C	+	+	+
– D	+	+	+
– E	+	+	+
Viscosity			
– Method 1	+	+	+
– Method 2	+	+	+
pH	+	+	+
Heavy metals	+	+	+
Loss on drying	+	+	+
Sulfated ash	+	+	+
Assay	+	+	+

Legend

+ : will adopt and implement

–: will not stipulate

Non-harmonised attributes

Characters, Packaging and storage

Local requirements

Appearance of solution (Ph. Eur.), Description (JP)

Reagents and reference materials

Each pharmacopoeia adapts the text to take account of local reference materials and reagent specifications.

(sign-off date: 6 June 2012)

MAIZE STARCH (0344)

As a result of the process of pharmacopoeial harmonisation, the following reflects the agreement settled by the Ph. Eur., the JP and the USP.

Harmonised attributes

Attribute	Ph. Eur.	JP	USP
Definition	+	+	+
Identification			
– A	+	+	+
– B	+	+	+
– C	+	+	+
pH	+	+	+
Iron	+	+	+
Oxidising substances	+	+	+
Sulfur dioxide	+	+	+
Loss on drying	+	+	+
Sulfated ash	+	+	+
Microbial contamination	+	-	+

Legend

+ : will adopt and implement

–: will not stipulate

Non-harmonised attributes

Characters, Storage

Local requirements

Labelling (USP), Absence of *Salmonella* (Ph. Eur.), Absence of *Staphylococcus aureus* and *Pseudomonas aeruginosa* when the product is intended for use in preparing Absorbable Dusting Powder (USP), Foreign Matter (Ph. Eur., JP)

Reagents and reference materials

Each pharmacopoeia adapts the text to take account of local reference materials and reagent specifications.

(sign-off date: 6 June 2012)

MANNITOL (0559)

As a result of the process of pharmacopoeial harmonisation, the following reflects the agreement settled by the Ph. Eur., the JP and the USP.

Harmonised attributes

Attribute	Ph. Eur.	JP	USP
Definition	+	+	+
Identification by IR	+	+	+
Appearance of solution	+	+	+
Conductivity	+	+	+
Melting point	+	+	+
Reducing sugars	+	+	+
Related substances	+	+	+
Nickel	+	+	+
Loss on drying	+	+	+
Microbial contamination	+	-	+
Bacterial endotoxins	+	-	+
Assay	+	+	+
Labelling	+	-	+

Legend

+ : will adopt and implement

–: will not stipulate

Non-harmonised attributes

Description/Characters, Heavy metals, Container/Packaging and storage

Local requirements

Second identification (specific optical rotation, melting point, TLC) (Ph. Eur.), Absence of *Salmonella* (Ph. Eur.)

Reagents and reference materials

Each pharmacopoeia adapts the text to take account of local reference materials and reagent specifications.

(sign-off date: 6 June 2012)

METHYLCELLULOSE (0345)

As a result of the process of pharmacopoeial harmonisation, the following reflects the agreement settled by the Ph. Eur., the JP and the USP.

Harmonised attributes

Attribute	Ph. Eur.	JP	USP
Definition	+	+	+
Labelling	+	+	+
Identification			
– A	+	+	+
– B	+	+	+
– C	+	+	+
– D	+	+	+
– E	+	+	+
Viscosity			
– Method 1	+	+	+
– Method 2	+	+	+
pH	+	+	+
Heavy metals	+	+	+
Loss on drying	+	+	+
Sulfated ash	+	+	+
Assay	+	+	+

Legend

+ : will adopt and implement

–: will not stipulate

Non-harmonised attributes

Characters, Packaging and storage

Local requirements

Appearance of solution (Ph. Eur.), Description (JP)

Reagents and reference materials

Each pharmacopoeia adapts the text to take account of local reference materials and reagent specifications.

(sign-off date: 6 June 2012)

POTATO STARCH (0355)

As a result of the process of pharmacopoeial harmonisation, the following reflects the agreement settled by the Ph. Eur., the JP and the USP.

Harmonised attributes

Attribute	Ph. Eur.	JP	USP
Definition	+	+	+
Identification			
– A	+	+	+
– B	+	+	+
– C	+	+	+
pH	+	+	+
Iron	+	+	+
Oxidising substances	+	+	+
Sulfur dioxide	+	+	+
Loss on drying	+	+	+
Sulfated ash	+	+	+
Microbial contamination	+	-	+

Legend

+ : will adopt and implement

–: will not stipulate

Non-harmonised attributes

Characters, Storage

Local requirements

Foreign matter (Ph. Eur.), Absence of *Salmonella* (Ph. Eur.)

Reagents and reference materials

Each pharmacopoeia adapts the text to take account of local reference materials and reagent specifications.

(sign-off date: 15 June 2011)

WHEAT STARCH (0359)

As a result of the process of pharmacopoeial harmonisation, the following reflects the agreement settled by the Ph. Eur., the JP and the USP.

Harmonised attributes

Attribute	Ph. Eur.	JP	USP
Definition	+	+	+
Identification			
– A	+	+	+
– B	+	+	+
– C	+	+	+
pH	+	+	+
Iron	+	+	+
Total protein	+	+	+
Oxidising substances	+	+	+
Sulfur dioxide	+	+	+
Loss on drying	+	+	+
Sulfated ash	+	+	+
Microbial contamination	+	-	+

Legend

+ : will adopt and implement

– : will not stipulate

Non-harmonised attributes

Characters, Storage

Local requirements

Foreign matter (Ph. Eur.), Absence of *Salmonella* (Ph. Eur.)

Reagents and reference materials

Each pharmacopoeia adapts the text to take account of local reference materials and reagent specifications.

(sign-off date: 15 June 2011)

01/2008:50900

5.9. POLYMORPHISM

Polymorphism (or crystal polymorphism) is a phenomenon related to the solid state; it is the ability of a compound in the solid state to exist in different crystalline forms having the same chemical composition. Substances that exist in a non-crystalline solid state are said to be amorphous.

When this phenomenon is observed for a chemical element (for example, sulfur), the term allotropy is used instead of polymorphism.

The term pseudopolymorphism is used to describe solvates (including hydrates), where a solvent is present in the crystal matrix in stoichiometric proportions; the term may also be extended to include compounds where the solvent is trapped in the matrix in variable proportions. However the term pseudopolymorphism is ambiguous because of its use in different circumstances. It is therefore preferable to use only the terms "solvates" and "hydrates".

Where a monograph indicates that a substance shows polymorphism, this may be true crystal polymorphism, occurrence of solvates, allotropy or occurrence of the amorphous form.

The identity of chemical composition implies that all crystalline and amorphous forms of a given species have the same chemical behaviour in solution or as a melt; in contrast, their physico-chemical and physical characteristics (solubility, hardness, compressibility, density, melting point, etc.), and therefore their reactivity and bioavailability may be different at the solid state.

When a compound shows polymorphism, the form for which the free enthalpy is lowest at a given temperature and pressure is the most thermodynamically stable. The other forms are said to be in a metastable state. At normal temperature and pressure, a metastable form may remain unchanged or may change to a thermodynamically more stable form.

If there are several crystalline forms, one form is thermodynamically more stable at a given temperature and pressure. A given crystalline form may constitute a phase that can reach equilibrium with other solid phases and with the liquid and gas phases.

If each crystalline form is the more stable within a given temperature range, the change from one form to another is reversible and is said to be enantiotropic. The change from one phase to another is a univariate equilibrium, so that at a given pressure this state is characterised by a transition temperature. However, if only one of the forms is stable over the entire temperature range, the change is irreversible or monotropic.

Different crystalline forms or solvates may be produced by varying the crystallisation conditions (temperature, pressure, solvent, concentration, rate of crystallisation, seeding of the crystallisation medium, presence and concentration of impurities, etc.).

The following techniques may be used to study polymorphism:

- X-ray diffraction of powders (*2.9.33*),
- X-ray diffraction of single crystals,
- thermal analysis (*2.2.34*) (differential scanning calorimetry, thermogravimetry, thermomicroscopy),
- microcalorimetry,
- moisture absorption analysis,
- optical and electronic microscopy,
- solid-state nuclear magnetic resonance,
- infrared absorption spectrophotometry (*2.2.24*),
- Raman spectrometry (*2.2.48*),
- measurement of solubility and intrinsic dissolution rate,
- density measurement.

These techniques are often complementary and it is indispensable to use several of them.

Pressure/temperature and energy/temperature diagrams based on analytical data are valuable tools for fully understanding the energetic relationship (enantiotropism, monotropism) and the thermodynamic stability of the individual modifications of a polymorphic compound.

For solvates, differential scanning calorimetry and thermogravimetry are preferable, combined with measurements of solubility, intrinsic dissolution rate and X-ray diffraction.

For hydrates, water sorption/desorption isotherms are determined to demonstrate the zones of relative stability.

In general, hydrates are less soluble in water than anhydrous forms, and likewise solvates are less soluble in their solvent than unsolvated forms.

04/2012:51000

5.10. CONTROL OF IMPURITIES IN SUBSTANCES FOR PHARMACEUTICAL USE

Preamble

The monographs of the European Pharmacopoeia on substances for pharmaceutical use are designed to ensure acceptable quality for users. The role of the Pharmacopoeia in public health protection requires that adequate control of impurities be provided by monographs. The quality required is based on scientific, technical and regulatory considerations.

Requirements concerning impurities are given in specific monographs and in the general monograph *Substances for pharmaceutical use (2034)*. Specific monographs and the general monograph are complementary: specific monographs prescribe acceptance criteria for impurities whereas the general monograph deals with the need for qualification, identification and reporting of any organic impurities that occur in *active substances*.

The thresholds for reporting, identification and qualification contained in the general monograph *Substances for pharmaceutical use (2034)* apply to all related substances. However, if a monograph does not contain a related substances test based on a quantitative method, any new impurities occurring above a threshold may be overlooked since the test is not capable to detect those impurities.

The provisions of the Related substances section of the general monograph *Substances for pharmaceutical use (2034)*, notably those concerning thresholds, do not apply to excipients; also excluded from the provisions of this section are: biological and biotechnological products; oligonucleotides; radiopharmaceuticals; fermentation products and semisynthetic products derived therefrom; herbal products and crude products of animal and plant origin. Although the thresholds stated in the general monograph do not apply, the general concepts of reporting, identification (wherever possible) and qualification of impurities are equally valid for these classes.

Basis for the elaboration of monographs of the European Pharmacopoeia

European Pharmacopoeia monographs are elaborated on substances that are present in medicinal products that have been authorised by the competent authorities of Parties to the *European Pharmacopoeia Convention*. Consequently, these monographs do not necessarily cover all sources of substances for pharmaceutical use on the world market.

Organic and inorganic impurities present in those substances that have been evaluated by the competent authorities are qualified with respect to safety at the maximum authorised content (at the maximum daily dose) unless new safety data that become available following evaluation justify lower limits.

European Pharmacopoeia monographs on substances for pharmaceutical use are elaborated by groups of experts and working parties collaborating with national pharmacopoeia authorities, the competent authorities for marketing authorisation, national control laboratories and the European Pharmacopoeia laboratory; they are also assisted by the producers of the substances and/or the pharmaceutical manufacturers that use these substances.

Control of impurities in substances for pharmaceutical use

The quality with respect to impurities is controlled by a set of tests within a monograph. These tests are intended to cover organic and inorganic impurities that are relevant in view of the sources of active substances in authorised medicinal products.

Control of residual solvents is provided by the general monograph *Substances for pharmaceutical use (2034)* and general chapter *5.4. Residual solvents*. The certificate of suitability of a monograph of the European Pharmacopoeia for a given source of a substance indicates the residual solvents that are controlled together with the specified acceptance criteria and the validated control method where this differs from those described in general chapter *2.4.24. Identification and control of residual solvents*.

Monographs on organic chemicals usually have a test entitled "Related substances" that covers relevant organic impurities. This test may be supplemented by specific tests where the general test does not control a given impurity or where there are particular reasons (for example, safety reasons) for requiring special control.

Where a monograph has no Related substances (or equivalent) test but only specific tests, the user of a substance must nevertheless ensure that there is suitable control of organic impurities; those occurring above the identification threshold are to be identified (wherever possible) and, unless justified, those occurring above the qualification threshold are to be qualified (see also under Recommendations to users of monographs of active substances).

Where the monograph covers substances with different impurity profiles, it may have a single related substances test to cover all impurities mentioned in the Impurities section or several tests may be necessary to give control of all known profiles. Compliance may be established by carrying out only the tests relevant to the known impurity profile for the source of the substance.

Instructions for control of impurities may be included in the Production section of a monograph, for example where the only analytical method appropriate for the control of a given impurity is to be performed by the manufacturer since the method is too technically complex for general use or cannot be applied to the final drug substance and/or where validation of the production process (including the purification step) will give sufficient control.

Impurities section in monographs on active substances

The Impurities section in a monograph includes impurities (chemical structure and name wherever possible), which are usually organic, that are known to be detected by the tests prescribed in the monograph. It is based on information available at the time of elaboration or revision of the monograph and is not necessarily exhaustive. The section includes specified impurities and, where so indicated, other detectable impurities.

Specified impurities have an acceptance criterion not greater than that authorised by the competent authorities.

Other detectable impurities are potential impurities with a defined structure but not known to be normally present above the identification threshold in substances used in medicinal products that have been authorised by the competent authorities of Parties to the Convention. They are given in the Impurities section for information.

Where an impurity other than a specified impurity is found in an active substance it is the responsibility of the user of the substance to check whether it has to be identified/qualified, depending on its content, nature, maximum daily dose and relevant identification/qualification threshold, in accordance with the general monograph on *Substances for pharmaceutical use (2034)*, Related substances section.

It should be noted that specific thresholds are applied to substances exclusively for veterinary use.

Interpretation of the test for related substances in the monographs on active substances

A specific monograph on a substance for pharmaceutical use is to be read and interpreted in conjunction with the general monograph on *Substances for pharmaceutical use (2034)*.

Where a general acceptance criterion for impurities ("any other impurity", "other impurities", "any impurity") equivalent to a nominal content greater than the applicable identification threshold (see the general monograph on *Substances for*

pharmaceutical use (2034)) is prescribed, this is valid only for specified impurities mentioned in the Impurities section. The need for identification (wherever possible), reporting, specification and qualification of other impurities that occur must be considered according to the requirements of the general monograph. It is the responsibility of the user of the substance to determine the validity of the acceptance criteria for impurities not mentioned in the Impurities section and for those indicated as other detectable impurities.

Acceptance criteria for the related substances test are presented in different ways in existing monographs; the decision tree (Figure 5.10.-1) may be used as an aid in the interpretation of general acceptance criteria and their relation with the Impurities section of the monograph.

General acceptance criteria for "other" impurities are expressed in various ways in the monographs: "any other impurity", "other impurities", "any impurity", "any spot", "any band", etc. The general acceptance criteria may apply to certain specified impurities only or to unspecified impurities and certain specified impurities, depending on the nature of the active substance and the applicable identification threshold. Pending editorial adaptation of already published monographs using unequivocal terminology, the decision tree (Figure 5.10.-1) may be used to determine the acceptance criterion to be applied.

Recommendations to users of monographs of active substances

Monographs give a specification for suitable quality of substances with impurity profiles corresponding to those taken into account during elaboration and/or revision of the monograph. It is the responsibility of the user of the substance to check that the monograph provides adequate control of impurities for a substance for pharmaceutical use from a given source, notably by using the procedure for certification of suitability of the monographs of the European Pharmacopoeia.

A monograph with a related substances test based on a quantitative method (such as liquid chromatography, gas chromatography and capillary electrophoresis) provides adequate control of impurities for a substance from a given source if impurities present in amounts above the applicable identification threshold are specified impurities mentioned in the Impurities section.

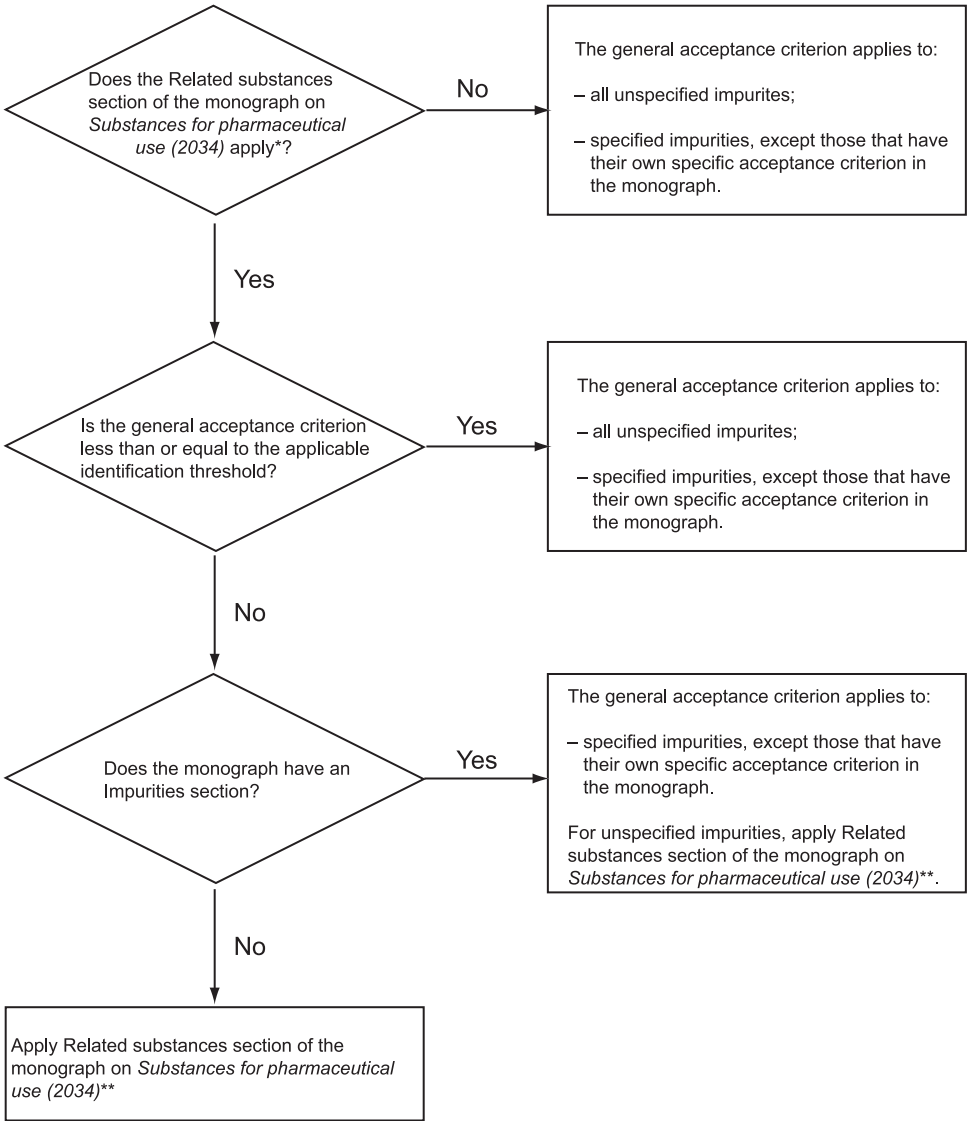

* The requirements of this section apply to active substances, with the exception of: biological and biotechnological products; oligonucleotides; radiopharmaceuticals; products of fermentation and semi-synthetic products derived therefrom; crude products of animal or plant origin; herbal products.

** To apply the Related substances section of the monograph *Substances for pharmaceutical use (2034)*:

- an individual acceptance criterion must be defined for any impurity that may be present above the identification threshold;
- any impurity with an acceptance criterion above the identification threshold must wherever possible be identified;
- any impurity with an acceptance criterion above the qualification threshold must be qualified.

Figure 5.10.-1. – *Decision tree for interpretation of general acceptance criteria for 'other' impurities in monographs*

If the substance contains impurities other than those mentioned in the Impurities section, it has to be verified that these impurities are detectable by the method described in the monograph, otherwise a new method must be developed and revision of the monograph must be requested. Depending on the contents found and the limits proposed, the identification and/or the qualification of these impurities must be considered.

Where a single related substances test covers different impurity profiles, only impurities for the known profile from a single source need to be reported in the certificate of analysis unless the marketing authorisation holder uses active substances with different impurity profiles.

Identification of impurities (peak assignment)

Where a monograph has an individual limit for an impurity, it is often necessary to define means of identification, for example using a reference substance, a representative chromatogram or relative retention. The user of the substance may find it necessary to identify impurities other than those for which the monograph provides a means of identification, for example to check the suitability of the specification for a given impurity profile by comparison with the Impurities section. The European Pharmacopoeia does not provide reference substances, representative chromatograms or information on relative retentions for this purpose, unless prescribed in the monograph. Users will therefore have to apply the available scientific techniques for identification.

New impurities/Specified impurities above the specified limit

Where a new manufacturing process or change in an established process leads to the occurrence of a new impurity, it is necessary to apply the provisions of the general monograph on *Substances for pharmaceutical use (2034)* regarding identification and qualification and to verify the suitability of the monograph for control of the impurity. A certificate of suitability is a means for confirming for a substance from a given source that the new impurity is adequately controlled or the certificate contains a method for control with a defined acceptance criterion. In the latter case revision of the monograph will be initiated.

Where a new manufacturing process or change in an established process leads to the occurrence of a specified impurity above the specified limit, it is necessary to apply the provisions of the general monograph on *Substances for pharmaceutical use (2034)* regarding qualification.

Expression of acceptance criteria

The acceptance criteria for related substances are expressed in monographs either in terms of comparison of peak areas (comparative tests) or as numerical values.

Chromatographic methods

General chapter *2.2.46. Chromatographic separation techniques* deals with various aspects of impurities control. Information is available via the EDQM website on commercial names for columns and other reagents and equipment found suitable during monograph development, where this is considered useful.

GLOSSARY

Disregard limit: in chromatographic tests, the nominal content at or below which peaks/signals are not taken into account for calculating a sum of impurities. The numerical values for the disregard limit and the reporting threshold are usually the same.

Identification threshold: a limit above which an impurity is to be identified.

Identified impurity: an impurity for which structural characterisation has been achieved.

Impurity: any component of a substance for pharmaceutical use that is not the chemical entity defined as the substance.

Nominal concentration: concentration calculated on the basis of the concentration of the prescribed reference and taking account of the prescribed correction factor.

Other detectable impurities: potential impurities with a defined structure that are known to be detected by the tests in a monograph but not known to be normally present above the identification threshold in substances used in medicinal products that have been authorised by the competent authorities of Parties to the Convention. They are unspecified impurities and are thus limited by a general acceptance criterion.

Potential impurity: an impurity that theoretically can arise during manufacture or storage. It may or may not actually appear in the substance. Where a potential impurity is known to be detected by the tests in a monograph but not known to be normally present in substances used in medicinal products that have been authorised by the competent authorities of Parties to the Convention, it will be included in the Impurities section under *Other detectable impurities* for information.

Qualification: the process of acquiring and evaluating data that establishes the biological safety of an individual impurity or a given impurity profile at the level(s) specified.

Qualification threshold: a limit above which an impurity is to be qualified.

Related substances: title used in monographs for general tests for organic impurities.

Reporting threshold: a limit above which an impurity is to be reported. Synonym: reporting level.

Specified impurity: an impurity that is individually listed and limited with a specific acceptance criterion in a monograph. A specified impurity can be either identified or unidentified.

Unidentified impurity: an impurity for which a structural characterisation has not been achieved and that is defined solely by qualitative analytical properties (for example, relative retention).

Unspecified impurity: an impurity that is limited by a general acceptance criterion and not individually listed with its own specific acceptance criterion.

01/2008:51100

5.11. CHARACTERS SECTION IN MONOGRAPHS

The General Notices indicate that the statements included in the Characters section are not to be interpreted in a strict sense and are not requirements. For information of users, the methods recommended to authors of monographs as the basis for statements concerning hygroscopicity, crystallinity and solubility are given below.

HYGROSCOPICITY

This method is to be carried out on a substance that complies with the test for loss on drying or water content of the monograph. The method gives an indication of the degree of hygroscopicity rather than a true determination.

Use a glass weighing vessel 50 mm in external diameter and 15 mm high. Weigh the vessel and stopper (m_1). Place the amount of substance prescribed for the test for loss on drying or water in the vessel and weigh (m_2). Place the unstoppered vessel in a desiccator at 25 °C containing a saturated solution of ammonium chloride or ammonium sulfate or place it in a climatic cabinet set at 25 ± 1 °C and 80 ± 2 per cent relative humidity. Allow to stand for 24 h. Stopper the weighing vessel and weigh (m_3).

Calculate the percentage increase in mass using the expression:

$$\frac{m_3 - m_2}{m_2 - m_1} \times 100$$

The result is interpreted as follows:

- *deliquescent*: sufficient water is absorbed to form a liquid,
- *very hygroscopic*: increase in mass is equal to or greater than 15 per cent,
- *hygroscopic*: increase in mass is less than 15 per cent and equal to or greater than 2 per cent,
- *slightly hygroscopic*: increase in mass is less than 2 per cent and equal to or greater than 0.2 per cent.

CRYSTALLINITY

This method is employed to establish the crystalline or amorphous nature of a substance.

Mount a few particles of the substance to be examined in mineral oil on a clean glass slide. Examine under a polarising microscope. Crystalline particles exhibit birefringence and extinction positions when the microscope stage is revolved.

SOLUBILITY

For this test a maximum of 111 mg of substance (for each solvent) and a maximum of 30 mL of each solvent are necessary.

Dissolving procedure

Shake vigorously for 1 min and place in a constant temperature device, maintained at a temperature of 25.0 ± 0.5 °C for 15 min. If the substance is not completely dissolved, repeat the shaking for 1 min and place the tube in the constant temperature device for 15 min.

Method

Weigh 100 mg of finely powdered substance (90) (*2.9.12*) in a stoppered tube (16 mm in internal diameter and 160 mm long), add 0.1 mL of the solvent and proceed as described under Dissolving Procedure. If the substance is completely dissolved, it is *very soluble*.

If the substance is not completely dissolved, add 0.9 mL of the solvent and proceed as described under Dissolving Procedure. If the substance is completely dissolved, it is *freely soluble*.

If the substance is not completely dissolved, add 2.0 mL of the solvent and proceed as described under Dissolving Procedure. If the substance is completely dissolved, it is *soluble*.

If the substance is not completely dissolved, add 7.0 mL of the solvent and proceed as described under Dissolving Procedure. If the substance is completely dissolved, it is *sparingly soluble*.

If the substance is not completely dissolved, weigh 10 mg of finely powdered substance (90) (*2.9.12*) in a stoppered tube, add 10.0 mL of the solvent and proceed as described under Dissolving Procedure. If the substance is completely dissolved, it is *slightly soluble*.

If the substance is not completely dissolved, weigh 1 mg of finely powdered substance (90) (*2.9.12*) in a stoppered tube, add 10.0 mL of the solvent and proceed as described under Dissolving Procedure. If the substance is completely dissolved, it is *very slightly soluble*.

01/2008:51200

5.12. REFERENCE STANDARDS

This chapter is published for information.

1. INTRODUCTION

'Reference standard' is used in this chapter as a general term covering reference substances, reference preparations and reference spectra.

Reference standards are frequently necessary to achieve adequate quality control of substances for pharmaceutical use and pharmaceutical preparations.

Reference standards are established using suitable procedures and their continued suitability for use is monitored according to a predefined programme. Where a reference standard is needed, it is an integral part of the pharmacopoeial monograph or the manufacturer's specification. Where a European Pharmacopoeia reference standard is referred to in a monograph or general chapter, it represents the official standard that is alone authoritative in case of doubt or dispute.

Reference materials and certified reference materials are defined below but are not otherwise dealt with in this chapter.

In several parts of the chapter, detailed information is given for chemical reference substances but not for biological reference preparations. The general principles given apply to the latter, but in view of their heterogeneous nature and frequently their complexity compared to chemical reference substances, detailed information on their use, establishment and the re-test programmes applied is not included. For peptide and protein reference standards, a specific approach is used for certain aspects, notably the establishment of an assigned content; this chapter does not deal with that approach.

2. TERMINOLOGY

Primary standard. A standard shown to have suitable properties for the intended use, the demonstration of suitability being made without comparison to an existing standard.

Secondary standard. A standard established by comparison with a primary standard.

International standard. An international standard is a primary standard that defines an International Unit. The equivalence in International Units of an international standard is stated by the World Health Organization.

European Pharmacopoeia reference standard. A reference standard established under the aegis of and approved by the European Pharmacopoeia Commission.

European Pharmacopoeia Chemical Reference Substance (CRS). A substance or mixture of substances intended for use as stated in a monograph or general chapter of the European Pharmacopoeia. European Pharmacopoeia Chemical Reference Substances are primary standards, except for those (notably antibiotics) that are calibrated in International Units. The latter are secondary standards traceable to the international standard.

European Pharmacopoeia Biological Reference Preparation (BRP). A substance or mixture of substances intended for use as stated in a monograph or general chapter of the European Pharmacopoeia. European Pharmacopoeia Biological Reference Preparations are either secondary standards calibrated in International Units or primary standards, which may be used to define a European Pharmacopoeia Unit. Other assigned values may also be used, for example, virus titre, or number of bacteria.

Reference Material (RM). A material or substance, one or more of whose property values are sufficiently homogeneous and well established to be used for the calibration of an apparatus, the assessment of a measurement method, or for assigning values to materials.

Certified Reference Material (CRM). A reference material, accompanied by a certificate, one or more of whose property values are certified by a procedure that establishes its traceability to an accurate realisation of the unit in which the property values are expressed, and for which each certified value is accompanied by an uncertainty at a stated level of confidence.

NOTE: pharmacopoeial reference standards are to be distinguished from reference materials and certified reference materials, which may be used in several contexts using a variety of analytical techniques for quantitative purposes. The use of reference materials is required or recommended in a number of monographs and general chapters of the pharmacopoeia, notably for calibration or verification of satisfactory performance of instruments.

The specificity of pharmacopoeial reference standards has been officially recognised in the introduction of ISO Guide 34 - *General requirements for the competence of reference material producers - (Second Edition 2000)*: "Pharmacopoeia standards and substances are established and distributed by pharmacopoeia authorities following the general principle of this guide. It should be noted, however, that a different approach is used by the pharmacopoeia authorities to give the user the information provided by the certificate of analysis and the expiration dates. Also, the uncertainty of their assigned values is not stated since it is negligible in relation to the defined limits of the method-specific assays of the pharmacopoeias for which they are used."

3. USE OF REFERENCE STANDARDS

Reference standards are employed in the identification, purity testing and assay of substances for pharmaceutical use and pharmaceutical preparations. Reference standards are shown to be suitable for their intended purpose; they are not necessarily suitable for other purposes. If a reference standard is to be used for any purpose other than that for which it has been established, its suitability for the new use has to be fully demonstrated. Any value assigned to a reference standard is valid for the intended use and not necessarily for other uses.

A European Pharmacopoeia reference standard with an assigned content/potency for use in the assay of a substance for pharmaceutical use may be suitable to determine the content of that substance in a pharmaceutical preparation where all the following conditions are fulfilled:

- the chromatographic assay method described in the active substance monograph is employed;
- the user verifies the applicability of the method to the particular pharmaceutical preparation (absence of interference);
- any pre-treatment of the sample (e.g. extraction) is validated for the particular pharmaceutical preparation;
- the use is approved by the competent authority.

Reference standards are also established for the determination of the content of components of herbal drugs and herbal drug preparations. These may be: the active principles themselves; marker constituents used for quantification; or extracts. Reference standards consisting of extracts are established using well-characterised samples of active principles or marker constituents.

It is the policy of the European Pharmacopoeia to supply reference standards in adequate quantities for immediate use after opening of the container. Use in other conditions is the responsibility of the analyst. If an unopened container is stored in the recommended conditions, it remains suitable for use as long as it is of the current batch. Information on current batch numbers is provided in the reference standards catalogue available from the European Directorate for the Quality of Medicines & HealthCare (Council of Europe). Storage of solutions of reference standards is not recommended unless suitability has been demonstrated by the user.

Secondary standards. A secondary standard may be used for routine quality control purposes for any of the uses described above for primary standards, provided that it is established with reference to the primary standard. A secondary standard is established and employed to reduce the use of the primary standard, which requires more extensive characterisation and evaluation and may be available only in a limited quantity. A secondary standard is used only for the same purpose as the primary standard with reference to which it has been established.

4. ESTABLISHMENT OF REFERENCE STANDARDS

4-1. *PRIMARY STANDARD*

A substance or preparation to be established as a primary standard is characterised by a variety of analytical techniques chosen to demonstrate its suitability for use.

For substances for pharmaceutical use and their impurities, relevant parts of the following test programme are usually applied.

- Characterisation of the substance (structural elucidation) by appropriate chemical attributes such as structural formula, empirical formula and molecular weight. A number of techniques may be used including:
  - nuclear magnetic resonance spectrometry;
  - mass spectrometry;
  - infrared spectrophotometry;
  - elemental analysis.
- Determination of the purity:
  - determination of the content of organic impurities by an appropriate separation technique or spectrometric method, where applicable;
  - quantitative determination of water;
  - determination of the content of residual solvents;
  - determination of loss on drying, which may in certain circumstances replace the determinations of water and residual solvents;
  - determination of inorganic impurities (test for heavy metals, sulfated ash, atomic spectrometry, inductively coupled plasma spectrometry, X-ray fluorescence); the results are not used in determining an assigned content, except where they would have an appreciable impact upon it;
  - determination of the purity by an absolute method (e.g. differential scanning calorimetry or phase solubility analysis where appropriate; the results of these determinations are used to support and confirm the results obtained from separation techniques; they are not used in the calculation of the assigned value).

For a primary chemical reference substance to be established for assay purposes, the assigned content is generally calculated from the values obtained from the analyses performed for the determination of impurities (organic, inorganic, water and solvents) by applying the principle of mass balance; other suitable methods are also used.

An establishment report for the reference standard is prepared and approved by the qualified person.

4-2. *EUROPEAN PHARMACOPOEIA REFERENCE STANDARDS*

The candidate standards are tested against a wide variety of analytical methods. The extent of testing and the number of laboratories involved depends on the use of the reference standard. Compliance with the relevant monograph is usually required, unless otherwise justified.

Where a collaborative trial is carried out during establishment, a protocol is provided for each participant and only valid results derived according to the protocol are used for establishing an assigned value or otherwise confirming suitability.

For chemical reference substances, relevant parts of the following programme are typically applied.

4-2-1. **Identification**. In general, a batch selected from the normal production of the substance is satisfactory. It is shown to comply with the requirements of the monograph; full structural elucidation is carried out for the first batch.

4-2-2. **Related substances test**. A reference standard corresponding to an impurity is characterised for identity and purity. Where a reference standard is used to determine the content of a given impurity, the preferred minimum content is 95.0 per cent; where this is achieved no assigned value is given, the content being considered as 100.0 per cent; this approximation is acceptable since there will be no appreciable effect on the determination of impurities. When this minimum content cannot be obtained, the standard has an assigned content.

If an impurity is not available in a sufficient quantity to establish a reference standard, a number of other options exist:

- preparation of a reference standard that contains a mixture of the compound(s) and the impurity or impurities;
- preparation of a reference standard containing a mixture of specified impurities.

Where such a mixture is also used to determine the content of a given impurity, the content of the impurity in the reference standard is determined by appropriate separation methods and a value assigned to the reference standard.

4-2-3. **Assay**

4-2-3-1. *Chemical assay.* When a reference standard is to be used for quantitative determination of an active substance or an excipient (assay standard), the extent of testing is greater. In general, several collaborating laboratories examine the proposed substance, following a detailed protocol that describes the procedures to be followed. The results obtained are used to assign a content. It is particularly important to quantify the impurities if a selective assay is employed. In such a case, it is best to examine the proposed substance by additional analytical procedures that are scientifically justified, including, where possible, absolute methods.

If a reference standard is required for a non-chromatographic assay method (e.g. colorimetry or ultraviolet spectrophotometry), the relative reactivity or relative absorbance of the impurities present in a substance must be checked to ensure that they are not markedly different from those of the substance.

A protocol is prepared and must be strictly followed by the participants of the collaborative trial to assign the content. The protocol usually requires:

- determination of water (or loss on drying);
- estimation of the organic impurities (including residual solvents when appropriate) using the prescribed separation techniques;
- and possibly, determination of the content of the substance by an absolute method; this would be a confirmatory determination not necessarily performed by all participants and the results would not be used in the calculation of the assigned value.

The protocol also indicates the system suitability tests and acceptance criteria for each of the tests performed.

Unless otherwise stated, an assigned value is given for the substance or preparation as presented in the container ('as is'), and the contents are not to be dried before use. For assay standards prepared by lyophilisation the content of the pure substance is indicated in milligrams or International Units per vial.

4-2-3-2. *Microbiological assay.* A reference standard for the microbiological assay is first shown to comply with the monograph. If the results are satisfactory a collaborative microbiological assay is carried out, using the international standard. The potency is expressed in International Units.

If an international standard does not exist, European Pharmacopoeia Units are used. The assigned potency is calculated from the results of a collaborative trial. Various validity criteria are applied including parallelism, linearity, and quadratic fit, according to the usual statistical procedures (*5.3*). The assigned potency with the confidence limits is calculated from statistically valid results.

4-2-3-3. *Assay of components of herbal drugs and herbal drug preparations*. Reference standards used in monographs of herbal drugs vary in the extent of testing depending on the type of reference standard.

- An active component or marker constituent is characterised and evaluated for identity and purity; a value for content is assigned irrespective of the purity.
- An extract is used as a reference standard when insufficient active principle or marker constituent is available. The assigned content of the extract is established by means of a collaborative trial using a well-characterised sample of the active principle or marker component for which a value is to be assigned.

4-2-4. **Establishment report**. A report containing the results of the establishment study as well as information concerning the use of the reference standard is prepared. The report for a chemical assay standard has a value assigned to the substance with the rationale for attributing that value. The estimated uncertainty of the assigned value is calculated, and where it is less than a predefined value, which is considered to be negligible in relation to the acceptance criteria for the assay, then the study is accepted. Otherwise, the trial may be repeated, in whole or in part, or the limits defined for the pharmaceutical substance may be widened. The uncertainty of the assigned value is not given as part of the information provided with the reference standard, since the precision of the method and the uncertainty of the value attributed to the reference standard are taken into account when setting the limit(s) in a monograph.

4-3. *SECONDARY STANDARD*

A secondary standard should exhibit the same property or properties as the primary standard, relevant for the test(s) for which it is established. The extent of testing is not so great as is required for the establishment of a primary standard. The secondary standard is established by comparison with the primary standard to which it is traceable. An official primary standard is used wherever possible for establishment of secondary standards.

Identification

- For use in infrared spectrophotometry: the absorbance bands correspond in position and relative size to the absorbance bands of the primary standard.
- For use in separation techniques: the migration distance, migration time and retention time of the secondary standard are the same as those of the primary standard for thin-layer chromatography or electrophoresis, capillary electrophoresis and gas or liquid chromatography respectively.

Purity test. For use in separation techniques: as for identification but when used for quantification, a content relative to the signal from the primary standard is to be established.

Assay. Secondary standards are assayed against a primary standard with an assigned content or potency. The property for which a value is to be assigned for the secondary standard is similar in magnitude to that of the primary reference standard with which it is compared. Both the number of independent replicate determinations to be performed and the acceptance criteria to be applied are predefined.

5. PRODUCTION, LABELLING, STORAGE AND DISTRIBUTION

5-1. *PRODUCTION*

All operations are carried out according to the relevant norms of best practice to ensure the traceability and integrity of the reference standard. The production record includes information regarding filling, labelling and storage. Reference standards are dispensed into containers under appropriate filling and closure conditions, to ensure the integrity of the reference standard. The containers employed may be multi-use or single use, but the latter is preferred to minimise the risk of decomposition, contamination, or water uptake.

5-2. *LABELLING*

The labelling bears the name of the reference standard, the name of the supplier, the batch number, and any other information necessary to the proper use of the reference standard. If used as an assay standard the following information is also given:

- the assigned percentage content;
- or, the content in milligrams or millilitres of the chemical entity in the container;
- or, the assigned potency (for biological assays or microbiological assays) in units either per milligram or per vial.

For a manufacturer's reference standard, the label indicates a re-test or expiry date. For European Pharmacopoeia reference standards, no re-test or expiry date is given since the re-test programme (see below) monitors continued fitness for use.

Leaflets. An accompanying explanatory leaflet may also be provided giving information needed for correct use of the reference standard. An explanatory leaflet is considered as part of the labelling. Where stated in a monograph, a chromatogram is included in the leaflet.

5-3. *STORAGE AND DISTRIBUTION*

Reference standards are to be stored and distributed in conditions suitable to ensure optimal stability.

European Pharmacopoeia reference standards. European Pharmacopoeia reference standards are mostly stored in temperature-controlled rooms at 5 ± 3 °C. However, a number of reference standards that are relatively unstable are stored at − 20 ± 5 °C or, in a few cases (e.g. live virus preparations), at − 80 ± 10 °C, and for cell cultures, under liquid nitrogen (− 180 °C).

Special packaging is employed to minimise the risk of damage during transport.

Reference standards that are normally stored at 5 ± 3 °C are dispatched by normal mail since short excursions from the long-term storage temperature are not deleterious to the reference standard. Reference standards stored at − 20 °C are packed on ice and dispatched by express courier. Reference standards stored at − 80 °C or stored under liquid nitrogen are packed on solid carbon dioxide and dispatched by express courier.

6. RE-TEST PROGRAMME

A system is established and implemented to ensure the continued fitness-for-use of the reference standards. Normally, a re-test programme is applied, taking account of the known physico-chemical properties and stability data for the reference standard. Reference standards are periodically tested for stability during storage. A monitoring programme is applied that is designed to detect at an early stage any sign of decomposition using appropriate analytical techniques. The methods employed should be chosen from amongst those performed during establishment so that baseline data are available.

The periodicity and extent of re-testing reference standards depends on a number of factors including:

- stability;

- container and closure system;
- storage conditions;
- hygroscopicity;
- physical form;
- intended use;
- presentation (single use/multiple use).

Most reference standards are presented in powder form but some are prepared as solutions. Preferably, reference standards are presented as single-use units. However, if the standard is presented in multi-use containers then re-testing may be more frequent for hygroscopic or oxygen-sensitive substances. The testing methods include the determination of water and decomposition products (where known). The re-test period may be lengthened with the support of sufficient data. The maximum permitted variation from the assigned value should be pre-defined, and if exceeded, the batch should be re-established or replaced.

European Pharmacopoeia reference standards. The monitoring programme of the EDQM includes a selection of the following tests, chosen for their rapidity, sensitivity and applicability to small quantities:

- determination of water, loss on drying and/or thermogravimetric analysis;
- estimation of impurities by stability-indicating separation techniques;
- where appropriate, determination of the molar purity by differential scanning calorimetry;
- application of other specific tests for detecting impurities.

Any significant differences observed compared with the last examination will lead to more extensive examination of the batch and, if necessary, to the establishment of a replacement batch.

01/2010:51400

5.14. GENE TRANSFER MEDICINAL PRODUCTS FOR HUMAN USE

This general chapter is published for information.

This general chapter contains a series of texts on gene transfer medicinal products for human use. The texts provide a framework of requirements applicable to the production and control of these products. For a specific medicinal product, application of these requirements and the need for any further texts is decided by the competent authority. The texts are designed to be applicable to approved products; the need for application of part or all of the texts to products used during the different phases of clinical trials is decided by the competent authority. The provisions of the chapter do not exclude the use of alternative production and control methods that are acceptable to the competent authority.

Further detailed recommendations on gene transfer medicinal products for human use are provided by the Note for Guidance on the Quality, Preclinical and Clinical Aspects of Gene Transfer Medicinal Products (CPMP/BWP/3088/99) and the Guideline on Development and Manufacture of Lentiviral Vectors (CHMP/BWP/2458/03) of the Committee for Medicinal Products for Human Use (including any subsequent revisions of these documents).

DEFINITION

For the purposes of this general chapter, gene transfer medicinal product (GTMP) shall mean a product obtained through a set of manufacturing processes aimed at the transfer, to be performed either *in vivo* or *ex vivo*, of a prophylactic, diagnostic or therapeutic gene (i.e. a piece of nucleic acid) to human/animal cells, and its subsequent expression *in vivo*. The gene transfer involves an expression system known as a vector, which can be of viral as well as non-viral origin. The vector can also be included in a human or animal cell.

Recombinant vectors, such as viral vectors and plasmids. Recombinant vectors are either injected directly into the patient's body (*in vivo* gene transfer) or transferred into host cells before administration of these genetically modified cells to the patient (*ex vivo* gene transfer). Viral vectors are derived from various viruses (for example, adenoviruses, poxviruses, retroviruses, lentiviruses, adeno-associated-viruses, herpesviruses). These vectors can be replicative, non-replicative or conditionally replicative. Plasmid vectors include nucleic acids in a simple formulation (for example, naked DNA) or complexed to various molecules (synthetic vectors such as lipids or polymers). Genetic material transferred by GTMPs consists of nucleotide sequences, which may notably encode gene products, antisense transcripts or ribozymes. Chemically synthesised oligonucleotides are not within the scope of this general chapter. After transfer, the genetic material may remain either cytoplasmic or episomal, or may be integrated into the host cell genome, depending on the integrating or non-integrating status of the vector.

Genetically modified cells. Genetically modified eukaryotic or bacterial cells are modified by vectors to express a product of interest.

PRODUCTION

Substances used in production. The raw materials used during the manufacturing process, including viral seed lot and cell bank establishment, where applicable, are qualified. Unless otherwise justified, all substances used are produced within a recognised quality management system using suitable production facilities. Suitable specifications are established to control notably their identity, potency (where applicable), purity and safety in terms of microbiological quality and bacterial endotoxin contamination. The quality of water used complies with the relevant corresponding monographs (*Purified water (0008)*, *Highly purified water (1927)*, *Water for injections (0169)*). Where bovine serum is used, it complies with the monograph *Bovine serum (2262)*. The use of antibiotics is avoided wherever possible during production.

Viral safety. The requirements of chapter *5.1.7* apply.

Transmissible spongiform encephalopathies (*5.2.8*). A risk assessment of the product with respect to transmissible spongiform encephalopathies is carried out and suitable measures are taken to minimise such risk.

Recombinant vectors

PRODUCTION

GENERAL PROVISIONS

For viral vectors, production is based on a cell bank system and a virus seed-lot system, wherever possible.

For plasmid vectors, production is based on a bacterial cell bank system.

The production method shall have been shown to yield a vector of consistent quality. Unless otherwise justified and authorised, the vector in the final product shall have undergone no more passages or subcultures from the master seed lot than were used to prepare the vector shown in clinical trials to be satisfactory with respect to safety and efficacy.

SUBSTRATE FOR VECTOR PROPAGATION

The substrates used comply with relevant requirements of the European Pharmacopoeia (*5.2.2*, *5.2.3*, and the section Bacterial cells used for the manufacture of plasmid vectors for human use).

CHARACTERISATION OF THE VECTOR

Historical records of vector construction are documented, including the origin of the vector and its subsequent manipulation, notably deleted or modified regions.

The vector is characterised using suitable and validated methods.

The genetic stability of the vector at or beyond the maximum passage level or the maximum number of cell doublings of the cell line used for production is assessed by suitable methods.

PROPAGATION AND HARVEST

All processing of the cell banks and subsequent cell cultures is done in an area where no other cells or vectors are handled at the same time. Any material of human or animal origin used in the preparation of cell suspensions and culture media is qualified. The purity of the harvest is verified by suitable tests as defined in the corresponding specific sections.

PURIFIED HARVEST

The bulk of active substance is defined as a lot of purified recombinant vectors (viral vectors, or naked or complexed plasmids).

FINAL LOT

Unless otherwise justified and authorised, formulation and distribution of the final bulk is carried out under aseptic conditions using sterile containers (*3.2*).

The stability of the final lot is assessed using stability protocols including the duration, storage conditions, number of lots to be tested, test schedule and assays to be performed.

ASSAYS AND TESTS

The GTMPs comply with assays and tests described in the corresponding specific sections.

Genetically modified cells

For cells to be modified with a recombinant vector, the data related to the recombinant vector are documented above, under Recombinant vectors.

PRODUCTION

CELL SUBSTRATE

For xenogeneic cell lines, including bacterial cells, a cell bank system comprising a master cell bank and working cell banks is established.

For autologous and allogeneic cells, a cell banking system comprising a master cell bank and working cell banks is established wherever possible.

TRANSFECTION / TRANSDUCTION

Cells are transfected or transduced using a recombinant vector (plasmid or viral vector) qualified as described under Recombinant vectors; the process is validated. They are handled under aseptic conditions in an area where no other cells or vectors are handled at the same time. All reagents used during cell manipulation steps are fully qualified. Antibiotics are avoided unless otherwise justified and authorised. Transfection or transduction is carried out under aseptic conditions.

FINAL LOT

In the case of frozen storage, the viability of genetically modified cells is assessed before freezing and after thawing.

If the cells are not used within a short period, stability is determined by verifying cell viability and expression of the genetic insert.

In the case of genetically modified cells encapsulated before implantation in man, any encapsulating component used is considered as part of the final product, and is therefore quality-controlled and fully characterised (for example, physical integrity, selective permeability, sterility).

ASSAYS AND TESTS

Controls of xenogeneic, allogeneic or autologous cells include the following:

- identity, counting and viability of cells;
- overall integrity, functionality, copies per cell, transfer and expression efficiency of the genetic insert;
- microbiological controls (*2.6.1* or *2.6.27*), endotoxin content, mycoplasma contamination (*2.6.7*), adventitious virus contamination and, where applicable, replicative vector generation.

The competent authority may approve a reduced testing programme where necessary because of limited availability of cells. Where necessary because of time constraints, the product may be released for use before the completion of certain tests.

PLASMID VECTORS FOR HUMAN USE

DEFINITION

Plasmid vectors for human use are double-stranded circular forms of bacterial DNA that carry a gene of interest or a nucleotide sequence encoding antisense sequences or ribozymes and its expression cassette; they are amplified in bacteria extrachromosomally. They are used to transfer genetic material into human somatic cells *in vivo* or to genetically modify autologous, allogeneic, xenogeneic or bacterial cells before administration to humans. Plasmid vectors may be presented as naked DNA or may be formulated with synthetic delivery systems such as lipids (lipoplexes), polymers (polyplexes) and/or peptide ligands that facilitate transfer across the cell membrane and delivery to the cell, or that target delivery via specific receptors.

Plasmids formulated with synthetic delivery systems are not within the scope of this section.

PRODUCTION

PLASMID CONSTRUCTION

A typical plasmid vector is composed of:

- the plasmid vector backbone that contains multiple restriction endonuclease recognition sites for insertion of the genetic insert and the bacterial elements necessary for plasmid production, such as selectable genetic markers for the identification of cells that carry the recombinant vector;
- the required regulatory genetic elements to facilitate expression of the genetic insert;
- the genetic insert;
- a polyadenylation signal.

A complete description of the plasmid DNA, including its nucleotide sequence, is established with the identification, source, means of isolation and nucleotide sequence of the genetic insert. The source and function of component parts of the plasmid, such as the origin of replication, viral and eukaryotic promoters and genes encoding selection markers, are documented.

GENERAL PROVISIONS

Cell banks. Production of plasmid vectors is based on a bacterial cell-bank system with generation and characterisation of a master cell bank (MCB), working cell banks (WCBs) and end-of-production cells (EOPCs), which comply with the section Bacterial cells used for the manufacture of plasmid vectors for human use. The raw materials used during the manufacturing process, including cell bank establishment, are qualified.

Selection techniques. Unless otherwise justified and authorised, antibiotic-resistance genes used as selectable genetic markers, particularly for clinically useful antibiotics, are not included in the vector construct. Other selection techniques for the recombinant plasmid are preferred.

Reference standards. A suitable batch of the formulated plasmid, preferably one that has been clinically evaluated, is fully characterised and retained for use as a reference standard as necessary in routine control tests.

PROPAGATION AND HARVEST

Plasmid DNA is transferred to host strain bacterial cells and a single clone of transformed bacteria is expanded to create the MCB. The WCB is then derived from the MCB. The EOPCs are obtained from the WCB by fermentation in production conditions.

Plasmid DNA is isolated from harvested cells using an extraction step and is purified to obtain the bulk product.

Unless otherwise justified and authorised, caesium chloride-ethidium bromide density gradients are not used for production.

PURIFIED PLASMID

The production process is optimised to remove impurities consistently while retaining product activity. The requirement to test for a particular impurity depends on the following:

- the demonstrated capability of the manufacture and purification processes to remove or inactivate the impurity through process validation, using specific quantification methods;
- the potential toxicity associated with the impurity;
- the potential decrease of the efficacy of the genetic insert product associated with the impurity.

If selective resistance to specific antibiotics has been used for selection, data from validation studies of purification procedures are required to demonstrate the clearance capability for residual antibiotics.

Relevant in-process controls are performed to ensure that the process is continuously under control, for example, amount and form of plasmid after the extraction steps and amount of endotoxins after the extraction steps.

Only a batch of purified plasmid that complies with the following requirements may be used.

Identity and integrity of the purified plasmid. Identity and integrity of the purified plasmid are established by suitable methods such as sequencing or nucleic acid amplification techniques (NAT) (*2.6.21*); restriction enzyme analysis may be used where it is sufficient to detect potential critical modifications in the plasmid and confirm the plasmid identity.

Plasmid DNA. The following indications are given as examples.

DNA concentrations greater than 500 ng/mL may be determined using absorbance measurement at 260 nm. A 50 µg/mL double-stranded DNA solution has an absorbance of 1 (specific absorbance 200).

DNA concentrations less than 500 ng/mL are determined following incubation with fluorescent dyes that bind specifically to double-stranded DNA, using a reference standard of DNA to establish a calibration curve.

Liquid chromatography may also be used to determine the concentration of plasmid DNA using a reference standard. In some cases, capillary electrophoresis is also acceptable.

DNA forms. Plasmid DNA is characterised in terms of the proportions of supercoiled, multimeric, relaxed monomer and linear forms, using suitable analytical methods, examples of which are given below. For quantification of supercoiled forms, anion-exchange high performance liquid chromatography (HPLC) or capillary electrophoresis may be used. Capillary electrophoresis is also suitable for the quantification of other forms.

Residual host-cell DNA. The content of residual host-cell DNA is determined using a suitable method, unless the process has been validated to demonstrate suitable clearance. Quantitative PCR is recommended for its sensitivity and specificity, but other suitable techniques may also be used.

Residual RNA. The content of residual RNA is determined, unless the process has been validated to demonstrate suitable clearance. Reverse-phase HPLC (RP-HPLC) may be used, or quantitative reverse-transcriptase polymerase chain reaction (RT-PCR) (*2.6.21*) when a lower limit of detection is required.

Residual host-cell protein. The concentration of residual host-cell protein is determined using standard protein assays (*2.5.33*), SDS-PAGE followed by silver staining, or specific immuno-assays such as western blot or ELISA, unless the process has been validated to demonstrate suitable clearance.

Microbiological control. Depending on the preparation concerned, it complies with the test for sterility (*2.6.1*) or the bioburden is determined (*2.6.12*).

Bacterial endotoxins (*2.6.14*): less than the limit approved for the particular preparation.

FINAL BULK

Several purified harvests may be pooled during preparation of the final bulk. A stabiliser and other excipients may be added. The formulated product is filtered through a bacteria-retentive filter.

Only a final bulk that complies with the following requirement may be used in the preparation of the final lot.

Sterility (*2.6.1*). It complies with the test for sterility.

FINAL LOT

Only a final lot that complies with each of the requirements given below under Identification, Tests and Assay may be released for use.

IDENTIFICATION

The plasmid vector is identified by restriction enzyme analysis or by sequencing. The test for biological activity also serves to identify the product.

TESTS

Tests carried out on the final lot include the following.

Appearance.

pH (*2.2.3*): within the limits approved for the particular preparation.

Extractable volume (*2.9.17*). It complies with the test for extractable volume.

Residual moisture (*2.5.12*): within the limits approved for the particular freeze-dried preparation.

DNA forms. The percentage of the specific monomeric supercoiled form is determined as described for the purified plasmid.

Sterility (*2.6.1*). It complies with the test for sterility.

Bacterial endotoxins (*2.6.14*): less than the limit approved for the particular preparation.

ASSAY

Plasmid DNA: not less than the quantity stated on the label, determined, for example, by 1 of the following methods.

DNA concentrations greater than 500 ng/mL may be determined using absorbance measurement at 260 nm. A 50 µg/mL double-stranded DNA solution has an absorbance of 1 (specific absorbance 200).

DNA concentrations less than 500 ng/mL are determined following incubation with fluorescent dyes that bind specifically to double-stranded DNA, using a reference standard of DNA to establish a calibration curve.

Liquid chromatography may also be used to determine the concentration of plasmid DNA using a reference standard. In some cases, capillary electrophoresis is also acceptable.

Biological activity. Wherever possible, biological activity is assessed through *in vitro* or *in vivo* bioassays. A well-defined, representative reference standard is required as a positive control for the assay. Bioassays employed to assay plasmid vectors generally involve transfection of a relevant cell line *in vitro*, followed by some functional measure of the expressed genetic insert. Such functional assays provide information about the activity of the product encoded by the genetic insert instead of the expression level of the genetic insert itself.

It may be necessary to supplement the bioassay with western-blot and ELISA assays to assess the integrity and quantity of the expressed product.

LABELLING

The label states:

- the plasmid DNA concentration;
- the recommended human dose;
- for freeze-dried preparations:
  - the name and volume of the liquid to be added;
  - the time within which the product is to be used after reconstitution.

BACTERIAL CELLS USED FOR THE MANUFACTURE OF PLASMID VECTORS FOR HUMAN USE

Production of plasmid vectors for human use is based on the use of a bacterial cell-bank system with generation and characterisation of a master cell bank (MCB), working cell banks (WCBs) and end-of-production cells (EOPCs). A bacterial cell bank for the manufacture of plasmid vectors is a collection of vials containing bacterial cells stored under defined conditions, with uniform composition, and obtained from pooled cells derived from a single clone of a transformed host strain. The MCB has a known, documented history; it is preferably derived from a qualified repository source. The WCB is produced by expanding one or more vials of the MCB. Methods and reagents used to produce the bank and storage conditions are documented.

MCBs and WCBs are qualified by testing an aliquot of the banked material or testing a subculture of the cell bank.

The following table indicates the tests required at each stage of production.

Assay	Host strain	MCB	WCB	EOPCs*
Identity and purity				
Viability	+	+	+	+
Bacterial strain characterisation	+	+	–	+
Genotyping / phenotyping	+	+	–	+
Presence of the plasmid				
– Sequence of the DNA plasmid	–	+	–	+
– Copy number	–	+	+	+
– Restriction map	–	+	+	+
– Percentage of cells retaining the plasmid	–	+	+	+
Adventitious agents				
Purity by plating	+	+	+	+
Presence of bacteriophage	+	+	–	+

* EOPCs are cells with a passage number at least equivalent to that used for production. The analysis has to be done once to validate each new WCB, except for purity, which has to be tested for each fermentation.

IDENTITY AND PURITY TESTING

Viability. The number of viable cells is determined by plating a diluted aliquot of bacterial cells on an appropriate medium and counting individual colonies.

Biochemical and physiological bacterial strain characterisation. Depending on the bacterial strain used for production, relevant biochemical and physiological characterisation is performed to confirm cell identity at the species level.

Genotyping / phenotyping. The genotype of bacterial cells is verified by determination of the suitable specific phenotypic markers or by appropriate genetic analysis.

Presence of the plasmid

Sequencing. The whole nucleotide sequence of the plasmid is verified.

Copy number. The plasmid DNA is isolated and purified from a known number of bacteria and the copy number determined by a suitable method such as quantitative PCR (*2.6.21*).

Restriction map. Restriction endonuclease digestion is performed with sufficient resolution to verify that the structure of the plasmid is unaltered in bacterial cells.

Percentage of cells retaining the plasmid. Bacterial elements present in the plasmid, such as selectable genetic markers, are used to define the percentage of bacteria retaining the plasmid.

ADVENTITIOUS AGENTS AND ENDOGENOUS VIRUSES

Purity by plating. Bacterial cells are streaked out onto suitable media and incubated in the required conditions in order to detect potential bacterial contaminants. In order to test for inhibition of the growth of contaminating organisms, additional tests in the presence of a definite amount of relevant positive control bacteria are carried out. A suitable number of colonies is examined; no contamination is detected.

Presence of bacteriophage. Bacterial cells are plated and incubated in a medium allowing proliferation of bacteriophages, to test for bacteriophage presence. The test is validated by the use of a reference bacteriophage strain and permissive cells as positive controls. A suitable number of colonies is examined; no contamination is detected.

ADENOVIRUS VECTORS FOR HUMAN USE

DEFINITION

Adenovirus vectors for human use are freeze-dried or liquid preparations of recombinant adenoviruses, genetically modified to transfer genetic material to human somatic cells *in vivo* or *ex vivo*.

PRODUCTION

VECTOR CONSTRUCTION

There are different approaches for the design and construction of an adenovirus vector. The purpose of clinical use determines which approach is optimal. A method is chosen that minimises the risk of generating replication-competent adenovirus vectors or that effectively eliminates helper viruses that might be used during production.

VECTOR PRODUCTION

The production method shall have been shown to yield a vector of consistent quality. Unless otherwise justified and authorised, the vector in the final product shall have undergone no more passages from the master seed lot than were used to prepare the vector shown in clinical trials to be satisfactory with respect to safety and efficacy.

The genetic and phenotypic stability of the vector at or beyond the maximum passage level used for production is assessed by suitable methods.

SUBSTRATE FOR VECTOR PROPAGATION

The vector is propagated in continuous cell lines (*5.2.3*) based on a cell bank system. The occurrence of replication-competent adenoviruses may be significant when large regions of homology exist between the viral genome and the genome of the complementation cells. This occurrence may be minimised by minimising the homology between both genomes. The use of cells with no sequence homology with the vector is recommended for production.

VECTOR SEED LOT

Production of the vector is based on a seed-lot system.

The strain of adenovirus used is identified by historical records that include information on its origin and its subsequent manipulation, notably deleted or modified regions. A detailed description of the genetic insert(s) and the flanking control regions is established, including the nucleotide sequence. The method by which the genetic insert is introduced into the vector is documented.

Only a seed lot that complies with the following requirements may be used for vector production.

Identification. The vector is identified in the master seed lot and each working seed lot by immunochemical methods (*2.7.1*), NAT (*2.6.21*) or restriction enzyme analysis.

Genetic and phenotypic characterisation. The following tests are carried out.

- The entire genome of the vector is sequenced at a passage level comparable to a production batch and the analytically determined sequence is compared to the theoretical sequence based on vector construction and available databases.
- Restriction enzyme analysis is performed on the vector DNA of the master seed lot, each working seed lot and a production batch. The viral DNA is extracted, purified and digested with sufficient resolution. The digested fragments are separated by gel electrophoresis or capillary electrophoresis and the observed restriction pattern is compared to the theoretical restriction pattern based on vector construction.

– A suitable number of isolated sub-clones are tested for expression of the genetic insert product(s) and biological activity at a passage level comparable to a production batch. Sub-clones giving lower levels of expression or biological activity need further characterisation.

Vector concentration. The titre of infectious vector or the concentration of vector particles in the master seed lot and each working seed lot are determined.

Extraneous agents (*2.6.16*). The master seed lot and each working seed lot comply with the tests for extraneous agents.

Replication-competent adenoviruses. Replication-competent adenoviruses are generated by homologous recombination between the recombinant viral DNA and the adenovirus sequences integrated into the genome of the complementation cells.

Detection of replication-competent adenoviruses is performed by a suitable method approved by the competent authority. It is generally performed by an infectivity assay on sensitive detector cell lines, which are not able to complement for the genes deleted from the vector. Other indicators of viral replication may be used as appropriate.

When replication-competent adenoviruses are not supposed to be present in the test sample, considering vector construction and cell lines used, at least 2, but preferably 3 or 4 successive passages are performed on the detector cell line, where applicable. Detection of a cytopathic effect at the end of the passages reveals the presence of replication-competent adenoviruses in the preparation. Positive controls are included in each assay to monitor its sensitivity.

When replication-competent adenoviruses are expected to be present in the test sample, plaque-assays or limit dilution assays on a detector cell line may be performed.

PROPAGATION AND HARVEST

All processing of the cell bank and subsequent cell cultures is done in an area with a suitable containment level where no other cells or vectors are handled at the same time. Any material of human or animal origin used in the preparation of cell suspensions and culture media is qualified. The cell culture medium may contain a pH indicator such as phenol red and suitable antibiotics at the lowest effective concentration, but it is preferable to have a substrate free from antibiotics during production. Unless otherwise justified and authorised, at no stage during production is penicillin or streptomycin used. A portion of the production cell cultures is set aside as uninfected cell cultures (control cells).

Each single harvest that complies with the following requirements may be used in the preparation of the purified harvest.

Identification. The vector is identified by immunochemical methods (*2.7.1*), NAT (*2.6.21*) or restriction enzyme analysis.

Vector concentration. The titre of infectious vector and the concentration of vector particles in single harvests are determined.

Extraneous agents (*2.6.16*). The single harvest complies with the tests for extraneous agents.

Control cells. Control cells comply with a test for identification (*5.2.3*) and a test for extraneous agents (*2.6.16*).

PURIFIED HARVEST

Several single harvests may be pooled before the purification process. The purification process is validated to demonstrate the satisfactory removal of impurities.

Purified harvests that comply with the following requirements may be used in the preparation of the final bulk.

Identification. The vector is identified by immunochemical methods (*2.7.1*), NAT (*2.6.21*) or restriction enzyme analysis.

Genomic integrity. Genomic integrity of the vector is verified by suitable methods such as restriction enzyme analysis.

Vector concentration. The titre of infectious vector and the concentration of vector particles in purified harvests are determined.

Residual host-cell protein. The concentration of residual host-cell protein is determined by a suitable immunochemical method (*2.7.1*), unless the process has been validated to demonstrate suitable clearance.

Residual host-cell DNA. The content of residual host-cell DNA is determined using a suitable method, unless the process has been validated to demonstrate suitable clearance. Quantitative polymerase chain reaction (PCR) is recommended for its sensitivity and specificity, but other suitable techniques may also be used.

Residual reagents. Where reagents are used during the production process, tests for these substances are carried out on the purified harvest, unless the process has been validated to demonstrate suitable clearance.

Residual antibiotics. Where antibiotics are used during the production process, their residual concentration is determined by a microbiological assay (adapted from general method *2.7.2*) or by other suitable methods (for example, liquid chromatography), unless the process has been validated to demonstrate suitable clearance.

FINAL BULK

Several purified harvests may be pooled during preparation of the final bulk. A stabiliser and other excipients may be added. The formulated product is filtered through a bacteria-retentive filter.

Only a final bulk that complies with the following requirement may be used in the preparation of the final lot.

Sterility (*2.6.1*). It complies with the test for sterility.

FINAL LOT

Only a final lot that complies with each of the requirements given below under Identification, Tests and Assay may be released for use.

Provided that the tests for bovine serum albumin (when bovine serum is used to manufacture the vector) and replication-competent adenoviruses have been carried out with satisfactory results on the final bulk, they may be omitted on the final lot.

IDENTIFICATION

The vector is identified by immunochemical methods (*2.7.1*), NAT (*2.6.21*) or restriction enzyme analysis.

TESTS

Osmolality (*2.2.35*): within the limits approved for the particular preparation.

pH (*2.2.3*): within the limits approved for the particular preparation.

Extractable volume (*2.9.17*). It complies with the test for extractable volume.

Residual moisture (*2.5.12*): within the limits approved for the particular freeze-dried preparation.

Bovine serum albumin: not more than the limit approved for the particular preparation, determined by a suitable immunochemical method (*2.7.1*), where bovine serum has been used during production.

Replication-competent adenovirus concentration: within the limits approved for the particular preparation.

Vector aggregates. Vector aggregates are determined by suitable methods (for example, light scattering).

Sterility (*2.6.1*). It complies with the test for sterility.

Bacterial endotoxins (*2.6.14*): less than the limit approved for the particular preparation.

Thermal stability. Maintain samples of the vector final lot at a temperature and for a length of time that are adapted and authorised for the particular preparation. Determine the total infectious vector concentration after heating, as described below under Assay. Determine in parallel the vector concentration of a non-heated sample. The estimation of the difference between the total vector concentration without heating and after heating is within the limits approved for the particular preparation.

ASSAY

Vector particle concentration. Physical titration is performed by a suitable technique (for example, liquid chromatography, absorbance measurement or NAT (*2.6.21*)). Use an appropriate vector reference standard to validate each assay.

The vector particle concentration of the preparation to be examined is not less than the concentration stated on the label.

Infectious vector titre. Titrate the preparation to be examined by inoculation into cell cultures. Titrate an appropriate vector reference standard to validate each assay.

The assay is invalid if:

- the confidence interval ($P = 0.95$) of the logarithm of the vector concentration is greater than a value authorised by the competent authority;
- the infectious vector titre of the reference standard is outside limit values defined by a control chart.

Ratio of vector particle concentration to infectious vector titre: within the limits approved for the particular preparation.

Expression of the genetic insert product. The expression of the genetic insert product(s) is determined wherever possible, following inoculation of cell cultures with the particular preparation at a predetermined multiplicity of infection, by suitable immunochemical (*2.7.1*) or biochemical assays or by flow cytometry (*2.7.24*).

Biological activity. Unless otherwise justified and authorised, biological activity is determined by a suitable *in vitro* or *in vivo* test.

LABELLING

The label states:

- the content of active substance;
- the recommended human dose, expressed in vector particle concentration;
- for freeze-dried preparations:
  - the name or composition and the volume of the reconstituting liquid to be added;
  - the time within which the product is to be used after reconstitution.

POXVIRUS VECTORS FOR HUMAN USE

DEFINITION

Poxvirus vectors for human use are freeze-dried or liquid preparations of recombinant poxviruses, genetically modified to transfer genetic material to human somatic cells *in vivo* or *ex vivo*.

PRODUCTION

VECTOR CONSTRUCTION

The general design of a poxvirus vector is currently as follows: the genetic insert is inserted downstream of a poxvirus promoter. This expression cassette is inserted into the poxvirus genome in such a manner that it interrupts a viral gene non-essential for replication or is positioned between 2 virus open reading frames.

In most strategies used so far for the construction of the vector, the expression cassette is first inserted within the target site of a virus DNA fragment cloned into a bacterial plasmid. The plasmid is then introduced into host cells, cultured *in vitro*, which are simultaneously infected with the parental poxvirus. DNA recombination occurs within the infected cells, between homologous sequences in the viral genome and viral sequences in the plasmid so as to transfer the genetic insert into the targeted site of the viral genome. The correct targeting of the inserted DNA is checked by restriction-enzyme mapping, NAT (*2.6.21*) and sequencing. Successive plaque-cloning steps are performed to purify the recombinant poxvirus from the mixture of parental and recombinant poxviruses. A variety of methods (for example, foreign marker genes, DNA hybridisation, immunological detection, phenotypic changes in the virus) are employed to facilitate recognition and/or selection of the recombinant poxvirus from the background of parental virus. Where foreign marker genes have been transiently employed, they are removed by appropriate methods from the final recombinant poxvirus.

An alternative strategy for creating poxvirus vectors begins with the *in vitro* construction of a full-length virus genome harbouring the expression cassette within a chosen target site. This recombinant genome is then introduced into host cells simultaneously infected with a helper poxvirus that is unable to multiply. The helper virus may be a poxvirus of the same species whose ability to multiply has been inactivated, or another poxvirus species that does not multiply in the host cells.

The construction of non-replicative poxvirus vectors relies on specific host cell lines or primary cells that are naturally permissive, or on host cell lines that have been modified to express an essential poxvirus gene. These cells fulfill the general requirements for the production of medicinal products (*5.2.3*) and do not allow the generation of replicative vectors.

VECTOR PRODUCTION

The production method shall have been shown to yield a vector of consistent quality. Unless otherwise justified and authorised, the vector in the final product shall have undergone no more passages from the master seed lot than were used to prepare the vector shown in clinical trials to be satisfactory with respect to safety and efficacy.

The genetic and phenotypic stability of the vector at or beyond the maximum passage level used for production is assessed by suitable methods.

SUBSTRATE FOR VECTOR PROPAGATION

The vector is propagated under aseptic conditions in human diploid cells (*5.2.3*), in continuous cell lines (*5.2.3*) or in cultures of chick-embryo cells derived from a chicken flock free from specified pathogens (*5.2.2*). When the vector is propagated in a continuous cell line or in human diploid cells, a cell-bank system is established.

VECTOR SEED LOT

Production of the vector is based on a seed-lot system.

The strain of poxvirus used is identified by historical records that include information on its origin and its subsequent manipulation, notably deleted or modified regions. A detailed description of the genetic insert(s) and the flanking control regions is established, including the nucleotide sequence. The method by which the genetic insert is introduced into the vector is documented.

Only a seed lot that complies with the following requirements may be used for vector production.

Identification. The vector is identified in the master seed lot and each working seed lot by immunochemical methods (*2.7.1*) or NAT (*2.6.21*).

Genetic and phenotypic characterisation. The following tests are carried out.

- The entire genome of the vector is sequenced at a passage level comparable to a production batch and the analytically determined sequence is compared to the theoretical sequence based on vector construction and available databases.

- Restriction enzyme analysis is performed on the vector DNA of the master seed lot, each working seed lot and a production batch. The viral DNA is extracted, purified and digested with sufficient resolution. The digested fragments are separated by gel electrophoresis or capillary electrophoresis and the observed restriction pattern is compared to the theoretical restriction pattern based on vector construction.
- A suitable number of isolated sub-clones are tested for expression of the genetic insert product(s) and biological activity at a passage level comparable to a production batch. Sub-clones giving lower levels of expression or biological activity need further characterisation.
- The host range is verified by determining the replication properties of the vector and comparing them with that of the parental virus, at a passage level comparable to a production batch.

Infectious vector titre. The titre of infectious vector in the master seed lot and each working seed lot is determined.

Extraneous agents (*2.6.16*). The master seed lot and each working seed lot comply with the tests for extraneous agents, except where cytopathic strains cannot be neutralised and the vector causes interference. Where a test cannot be performed, carry out a suitable validated alternative.

PROPAGATION AND HARVEST

All processing of the cell bank and subsequent cell cultures is done under aseptic conditions in an area with a suitable containment level where no other cells or vectors are handled at the same time. Any material of human or animal origin used in the preparation of cell suspensions and culture media is qualified. The cell culture medium may contain a pH indicator such as phenol red and suitable antibiotics at the lowest effective concentration, but it is preferable to have a substrate free from antibiotics during production. Unless otherwise justified and authorised, at no stage during production is penicillin or streptomycin used. A portion of the production cell culture is set aside as uninfected cell cultures (control cells).

Each single harvest that complies with the following requirements may be used in the preparation of the purified harvest.

Identification. The vector is identified by immunochemical methods (*2.7.1*) or NAT (*2.6.21*).

Infectious vector titre. The titre of infectious vector in single harvests is determined.

Extraneous agents (*2.6.16*). The single harvest complies with the tests for extraneous agents, except where cytopathic strains cannot be neutralised and the vector causes interference. Where a test cannot be performed, carry out a suitable validated alternative.

Control cells. If human diploid cells or a continuous cell line are used for production, the control cells comply with a test for identification (*5.2.3*). They comply with the tests for extraneous agents (*2.6.16*).

PURIFIED HARVEST

Processing is carried out under aseptic conditions. Several single harvests may be pooled before the purification process. The harvest is first clarified to remove cells and then, where applicable, purified by validated methods.

Purified harvests that comply with the following requirements may be used in the preparation of the final bulk.

Identification. The vector is identified by immunochemical methods (*2.7.1*) or NAT (*2.6.21*).

Genomic integrity. Genomic integrity of the vector is verified by suitable methods such as restriction enzyme analysis.

Infectious vector titre. The titre of infectious vector in purified harvests is determined.

Ratio of infectious vector titre to total protein concentration. The total protein concentration is determined by a suitable method (*2.5.33*). The ratio between infectious vector titre and total protein concentration is calculated.

Residual host-cell protein. The concentration of residual host-cell protein is determined by a suitable immunochemical method (*2.7.1*), unless the process has been validated to demonstrate suitable clearance.

Residual host-cell DNA. The content of residual host-cell DNA is determined using a suitable method, unless the process has been validated to demonstrate suitable clearance. Quantitative PCR is recommended for its sensitivity and specificity, but other suitable techniques may also be used.

Residual reagents. Where reagents are used during the production process, tests for these substances are carried out on the purified harvest, unless the process has been validated to demonstrate suitable clearance.

Residual antibiotics. Where antibiotics are used during the production process, their residual concentration is determined by a microbiological assay (adapted from general method *2.7.2*) or by other suitable methods (for example, liquid chromatography), unless the process has been validated to demonstrate suitable clearance.

FINAL BULK

Several purified harvests may be pooled during preparation of the final bulk. A stabiliser and other excipients may be added. Only a final bulk that complies with the following requirement may be used in the preparation of the final lot.

Sterility (*2.6.1*). It complies with the test for sterility.

FINAL LOT

Only a final lot that complies with each of the requirements given below under Identification, Tests and Assay may be released for use.

Provided that the test for bovine serum albumin (when bovine serum is used to manufacture the vector) has been carried out with satisfactory results on the final bulk, it may be omitted on the final lot.

IDENTIFICATION

The vector is identified by immunochemical methods (*2.7.1*) or NAT (*2.6.21*).

TESTS

Osmolality (*2.2.35*): within the limits approved for the particular preparation.

pH (*2.2.3*): within the limits approved for the particular preparation.

Extractable volume (*2.9.17*). It complies with the test for extractable volume.

Residual moisture (*2.5.12*): within the limits approved for the particular freeze-dried preparation.

Bovine serum albumin: not more than the limit approved for the particular preparation, determined by a suitable immunochemical method (*2.7.1*), where bovine serum has been used during production.

Sterility (*2.6.1*). It complies with the test for sterility.

Bacterial endotoxins (*2.6.14*): less than the limit approved for the particular preparation.

Thermal stability. Maintain samples of the vector final lot at a temperature and for a length of time that are adapted and authorised for the particular preparation. Determine the total infectious vector concentration after heating, as described below under Assay. Determine in parallel the vector concentration of a non-heated sample. The estimation of the difference between the total vector concentration without heating and after heating is within the limits approved for the particular preparation.

ASSAY

Infectious vector titre. Titrate at least 3 vials of the preparation to be examined by inoculation into cell cultures. Titrate a vial of an appropriate vector reference standard to validate each assay.

The vector titre of the preparation to be examined is not less than the minimum titre stated on the label.

The assay is invalid if:

- the confidence interval ($P = 0.95$) of the logarithm of the vector concentration is greater than a value authorised by the competent authority;
- the infectious vector titre of the reference standard is outside limit values defined by a control chart.

Expression of the genetic insert product. The expression of the genetic insert product(s) is determined, wherever possible, following inoculation of cell cultures with the particular preparation at a predetermined multiplicity of infection, by suitable immunochemical (*2.7.1*) or biochemical assays or by flow cytometry (*2.7.24*).

Biological activity. Unless otherwise justifed and authorised, biological activity is determined by a suitable *in vitro* or *in vivo* test.

LABELLING

The label states:

- the minimum vector titre per human dose;
- the recommended human dose;
- for freeze-dried preparations:
  - the name or composition and the volume of the reconstituting liquid to be added;
  - the time within which the product is to be used after reconstitution.

RETROVIRIDAE-DERIVED VECTORS FOR HUMAN USE

DEFINITION

Retroviridae-derived vectors for human use are liquid or freeze-dried preparations of recombinant retroviruses, lentiviruses or spumaviruses, genetically modified to render them replication-incompetent, which are used to transfer genetic material to human somatic cells *in vivo* or *ex vivo*. This section applies to non-replicative vectors.

PRODUCTION

VECTOR CONSTRUCTION

A typical vector is composed of:

- the minimal genome from parental viruses containing the structural genetic elements shown to be indispensable for vector production;
- the required regulatory genetic elements for expression of the genetic insert (for example, long terminal repeats (LTRs));
- the genetic insert.

The vector construction is designed to prevent the generation of replication-competent viruses.

VECTOR PRODUCTION

The production method shall have been shown to yield a vector of consistent quality. Unless otherwise justified and authorised, the packaging or producer cells shall have undergone no more cell doublings from the master cell bank (MCB) than were used to prepare the vector shown in clinical trials to be satisfactory with respect to safety and efficacy. The genetic and phenotypic stability of the packaging or producer cells at or beyond the maximum number of cell doublings used for production is assessed by suitable methods.

Vectors are produced in continuous cell lines (*5.2.3*) using a cell-bank system. Production may involve either stably or transiently transfected cells.

DEFINITIONS

Packaging cells: a source cell line stably transfected with plasmids containing the viral genes necessary for production of empty vector particles: *gag*, *pol*, *env*.

Producer cells: contain the viral genes and expression cassette necessary for vector production.

- In stable production systems, the producer cells are generated by stable transfection of the packaging cell line by a transfer plasmid containing the sequence of interest.
- In transient production systems, the producer cells are generated at the time of manufacture by simultaneous transfection of the source cell line with both the viral genes and the transgene expression plasmid, or by transient transfection of the packaging cell line by a transfer plasmid containing the sequence of interest.

PRODUCTION INTERMEDIATES

Packaging cells

Copy number. The genomic DNA is isolated and purified from a known number of cells and the *gag*, *pol* and *env* genes copy number is determined by a suitable method such as quantitative PCR (*2.6.21*).

Sequence integrity of the viral genes. Complete nucleotide sequencing of the inserted viral genes and their regulatory elements is performed.

Genetic stability. Genetic stability of the packaging cells is verified at or beyond the maximum number of cell doublings used for production.

Plasmids

Production of the vector requires the use of plasmid intermediates. For each plasmid DNA used during production, a complete description is established, including identification, source, means of isolation and nucleotide sequence. The source and function of component parts of these plasmids, such as the origin of replication, viral and eukaryotic promoters and genes encoding selection markers, are documented.

Production of plasmid intermediates is based on a bacterial cell-bank system. The MCB complies with the requirements of the section Bacterial cells used for the manufacture of plasmid vectors for human use. Plasmids are purified by suitable techniques.

Only plasmid batches that comply with the following requirements may be used for the production of the vector.

Identification. Plasmids are identified by restriction enzyme analysis, sequencing or NAT (*2.6.21*).

Genomic integrity. Genomic integrity of the plasmid is verified by suitable methods such as restriction enzyme analysis of the viral genes, the genetic insert and their respective regulation elements.

Plasmid DNA. The following indications are given as examples.

DNA concentrations greater than 500 ng/mL may be determined using absorbance measurement at 260 nm. A 50 µg/mL double-stranded DNA solution has an absorbance of 1 (specific absorbance 200).

DNA concentrations less than 500 ng/mL are determined following incubation with fluorescent dyes that bind specifically to double-stranded DNA, using a reference standard of DNA to establish a calibration curve.

Liquid chromatography may also be used to determine the concentration of plasmid DNA using a reference standard. In some cases, capillary electrophoresis is also acceptable.

Residual host-cell DNA. The content of residual host-cell DNA is determined using a suitable method, unless the production process has been validated to demonstrate suitable clearance. Quantitative PCR is recommended for its sensitivity and specificity, but other suitable techniques may also be used.

Bacterial endotoxins (*2.6.14*): less than the limit approved for the particular preparation.

Sterility (*2.6.1*). It complies with the test for sterility.

Producer cells used in a stable production system

Copy number. The copy number of the integrated viral genes and expression cassette is determined by a suitable method.

Genetic stability. Genetic stability of the producer cells at or beyond the maximum number of cell doublings used for production is confirmed.

Sequence integrity of the viral genes and expression cassette. Complete nucleotide sequencing of the inserted viral genes, the expression cassette and their respective regulation elements (for example, LTRs, promoters, psi sequence, polyadenylation signal) is performed.

Replication-competent viruses. The detection of replication-competent viruses is performed by suitable methods. Detection may be based on a co-cultivation for several cell doublings of the producer cells with a permissive cell line, followed by detection (either by observation of a cytopathic or haemadsorbing effect on indicator cells like PG4 S+L-, by detection using indicator cell lines by NAT (*2.6.21*) or by marker-rescue assay). Positive controls are included in each assay to monitor its sensitivity. No replication competent viruses are found.

PRODUCTION AND HARVEST

All processing of the cell bank and subsequent cell cultures is done in an area with a suitable containment level where no other cells or vectors are handled at the same time. Any material of human or animal origin used in the preparation of cell suspensions and culture media must be qualified. It is preferable to have a substrate free from antibiotics during production. Unless otherwise justified and authorised, at no stage during production is penicillin or streptomycin used.

Each single harvest that complies with the following requirements may be used in the preparation of the purified harvest.

Identification. The vector is identified by immunochemical methods (*2.7.1*), NAT (*2.6.21*) or restriction enzyme analysis.

Vector concentration. The titre of infectious vector and/or the concentration of vector particles in single harvests is determined.

Extraneous agents. Each single harvest complies with the tests for extraneous agents (*2.6.16*).

Control cells. Where a transient production process is used, control cells comply with a test for identification (*5.2.3*) and a test for extraneous agents (*2.6.16*).

PURIFIED HARVEST

Several single harvests may be pooled before purification. Purified harvests that comply with the following requirements may be used in the preparation of the final bulk.

Identification. The vector is identified by immunochemical methods (*2.7.1*), NAT (*2.6.21*) or restriction enzyme analysis.

Genomic integrity. Genomic integrity of the vector is verified by a suitable method.

Vector concentration. The infectious particle titre is determined by a suitable method, for example infection of permissive cells followed by quantitative NAT (for example, quantitative PCR), Southern blot or protein expression. For lentivirus vectors, the physical titre is measured, for example by ELISA (p24).

Replication-competent viruses. Detection of replication-competent viruses is performed by suitable methods. It is generally performed by amplification on permissive cells followed by NAT (*2.6.21*), by detection of a viral antigen (for example, p24 by ELISA) or by marker-rescue assay. Positive controls are included in each assay to monitor its sensitivity.

Detection of replication-competent viruses is performed on the purified harvest or on the final lot. No replication-competent viruses are found.

Residual host-cell protein. The concentration of residual host-cell protein is determined by a suitable immunochemical method (*2.7.1*), unless the process has been validated to demonstrate suitable clearance.

Residual host-cell DNA. The content of residual host-cell DNA is determined using a suitable method, unless the process has been validated to demonstrate suitable clearance. Quantitative PCR is recommended for its sensitivity and specificity, but other suitable techniques may also be used.

Residual reagents. Where reagents are used during production, tests for these substances are carried out on the purified harvest, unless the process has been validated to demonstrate suitable clearance.

Residual antibiotics. Where antibiotics are used during the production process, their residual concentration is determined by a microbiological assay (adapted from general method *2.7.2*) or by other suitable methods (for example, liquid chromatography), unless the process has been validated to demonstrate suitable clearance.

Residual plasmids. Where a transient production process is used, the concentration of residual contaminating plasmids must be quantified.

FINAL BULK

Several purified harvests may be pooled during preparation of the final bulk. A stabiliser and other excipients may be added. The formulated product is filtered through a bacteria-retentive filter.

Only a final bulk that complies with the following requirement may be used in the preparation of the final lot.

Sterility (*2.6.1*). It complies with the test for sterility.

FINAL LOT

Only a final lot that complies with each of the requirements given below under Identification, Tests and Assay may be released for use.

Provided that the tests for bovine serum albumin (when bovine serum is used to manufacture the vector) and replication-competent viruses have been carried out with satisfactory results on the purified harvest, they may be omitted on the final lot.

IDENTIFICATION

Retroviridae-derived vectors are identified by NAT (*2.6.21*), immunochemical methods (*2.7.1*) or restriction enzyme analysis.

TESTS

Osmolality (*2.2.35*): within the limits approved for the particular preparation.

pH (*2.2.3*): within the limits approved for the particular preparation.

Extractable volume (*2.9.17*). It complies with the test for extractable volume.

Residual moisture (*2.5.12*): within the limits approved for the particular freeze-dried preparation.

Bovine serum albumin: where bovine serum has been used during production, not more than the limit approved for the particular preparation, determined by a suitable immunochemical method (*2.7.1*).

Replication-competent viruses. Detection of replication-competent viruses is performed by suitable methods. It is generally performed by amplification on permissive cells followed by NAT (*2.6.21*), detection of a viral antigen (for example, p24 by ELISA) or marker-rescue assay. Positive controls are included in each assay to monitor its sensitivity.

Detection of replication-competent viruses is performed on the purified harvest or on the final lot. No replication-competent viruses are found.

Sterility (*2.6.1*). It complies with the test for sterility.

Bacterial endotoxins (*2.6.14*): less than the limit approved for the particular preparation.

ASSAY

Vector-particle concentration. Physical titration is performed by a suitable technique (for example, immunochemical methods (*2.7.1*) or NAT (*2.6.21*)). Use an appropriate vector reference standard to validate each assay.

Infectious vector titre. Titrate the preparation to be examined by inoculation into cell cultures. Titrate an appropriate vector reference standard to validate each assay.

The infectious vector titre of the preparation to be examined is not less than the minimum titre stated on the label.

The assay is invalid if:

- the confidence interval ($P = 0.95$) of the logarithm of the vector concentration is greater than a value authorised by the competent authority;
- the infectious vector titre of the reference standard is outside limit values defined by a control chart.

Ratio of vector-particle concentration to infectious vector titre: within the limits approved for the particular product, where applicable.

Expression of the genetic insert product. The expression of the genetic insert product(s) is determined wherever possible, following inoculation of cell cultures with the product at a predetermined multiplicity of infection, by suitable immunochemical (*2.7.1*) or biochemical assays or by flow cytometry (*2.7.24*).

Biological activity. Unless otherwise justified and authorised, biological activity is determined by a suitable *in vitro* or *in vivo* test.

LABELLING

The label states:

- the minimum vector titre per human dose;
- the recommended human dose;
- for freeze-dried preparations:
  - the name or composition and the volume of the reconstituting liquid to be added;
  - the time within which the product is to be used after reconstitution.

ADENO-ASSOCIATED-VIRUS VECTORS FOR HUMAN USE

DEFINITION

Adeno-associated-virus (AAV) vectors for human use are freeze-dried or liquid preparations of recombinant AAV (rAAV), genetically modified to transfer genetic material to human somatic cells *in vivo* or *ex vivo*.

PRODUCTION

VECTOR CONSTRUCTION

rAAV vectors are developed by replacement of the *rep* and *cap* genes with the genetic insert of interest. The inverted terminal repeat (ITR) sequences are retained in the rAAV vector since these are the only AAV sequences absolutely required in *cis* to function as the origin of replication. The *rep* and *cap* genes are required in *trans* and function for replication and packaging respectively. In summary, the rAAV vector contains the ITRs and the genetic insert.

Wild-type AAV normally replicate only in the presence of helper functions, provided by a coinfecting adenovirus or herpes virus. Therefore, there are different approaches to the manufacture of an AAV vector. The manufacturing strategy chosen is designed to minimise the risk for the generation of replication-competent AAV vectors and effectively eliminate helper viruses that might be used during production.

VECTOR PRODUCTION

The production method shall have been shown to yield a vector of consistent quality and stability.

To produce AAV vectors, several strategies are currently used, for example:

- transient co-transfection of a cell line with plasmids containing the ITRs and the genetic insert, *rep* and *cap* genes and helper functions;
- infection with a replication-deficient helper virus of a producer cell line harbouring *rep* and *cap* genes, the ITRs and the genetic insert;
- infection of a permissive cell line with 1 or several production viruses encoding *rep* and/or *cap* and/or the genetic insert and the ITRs, and that may or may not provide helper functions (helper viruses and baculoviruses, respectively).

Depending on the strategy used to produce AAV vectors, different production intermediates are required (plasmids, viruses used for production, packaging cells).

The occurrence of replication-competent AAV may be significant when regions of homology exist between the genomes of the production intermediates and the rAAV vector. This occurrence may be minimised by reducing the homology between these genomes to a minimum. The use of production intermediates with no sequence homology is recommended for production.

The genetic and phenotypic stability of the vector at or beyond the maximum number of passage levels used for production is assessed by suitable methods.

PRODUCTION INTERMEDIATES

Viruses used for production and the rAAV vector are produced in continuous cell lines (*5.2.3*) using a seed lot and a cell-bank system.

Packaging and producer cells

Copy number. The genomic DNA is isolated and purified from a known number of cells and the copy number of the inserted viral genes and of the expression cassette is determined by a suitable method such as quantitative PCR (*2.6.21*).

Sequence integrity of the viral genes and expression cassette. Complete nucleotide sequencing of the inserted viral genes, of their regulatory elements and where applicable, of the expression cassette is performed.

Genetic stability. Genetic stability of the cells is verified at or beyond the maximum number of cell doublings used for production.

Wild-type AAV. The absence of wild-type AAV is verified using NAT (*2.6.21*).

Plasmids

Production of the AAV vector by transient co-transfection requires the use of plasmid intermediates. For each plasmid DNA used during production, a complete description is established, including identification, source, means of isolation and nucleotide sequence. The source and function of component parts of these plasmids, such as the origin of replication, viral and eukaryotic promoters and genes encoding selection markers, are documented.

Production of plasmid intermediates is based on a bacterial cell-bank system. The master cell bank complies with the requirements of the section Bacterial cells used for the manufacture of plasmid vectors for human use. Plasmids are purified by suitable techniques.

Only plasmid batches that comply with the following requirements may be used for the production of the AAV vector.

Identification. Plasmids are identified by restriction enzyme analysis, sequencing or NAT (*2.6.21*).

Genomic integrity. Genomic integrity of the plasmid is verified by suitable methods such as restriction enzyme analysis of the region corresponding to *rep*, *cap* and the expression cassette.

Plasmid DNA. The following indications are given as examples.

DNA concentrations greater than 500 ng/mL may be determined using absorbance measurement at 260 nm. A 50 µg/mL double-stranded DNA solution has an absorbance of 1 (specific absorbance 200).

DNA concentrations less than 500 ng/mL are determined following incubation with fluorescent dyes that bind specifically to double-stranded DNA, using a reference standard of DNA to establish a calibration curve.

Liquid chromatography may also be used to determine the concentration of plasmid DNA using a reference standard. In some cases, capillary electrophoresis is also acceptable.

Residual host-cell DNA. The content of residual host-cell DNA is determined using a suitable method, unless the production process has been validated to demonstrate suitable clearance. Quantitative PCR is recommended for its sensitivity and specificity, but other suitable techniques may also be used.

Bacterial endotoxins (*2.6.14*): less than the limit approved for the particular preparation.

Sterility (*2.6.1*). It complies with the test for sterility.

Viruses used for production

Their production is based on a seed lot and a cell-bank system or, where applicable (for example, for baculoviruses), on a transient system. The strain of virus used is identified by historical records that include information on its origin and its subsequent manipulation, notably deleted or modified regions. The nucleotide sequence of the viruses is documented.

Only a virus used for production that complies with the following requirements may be used.

Identification. Viruses used for production are identified by immunochemical methods (*2.7.1*), NAT (*2.6.21*) or restriction enzyme analysis.

Genomic integrity. Genomic integrity of the virus used for production is verified by suitable methods such as restriction enzyme analysis. Where viruses are modified to express *rep* or *cap* genes or the expression cassette, genomic integrity is assessed by sequencing or by quantitative PCR of these regions.

Genetic stability. Where a stable production system is used, genetic stability is verified at or beyond the maximum number of cell doublings used for production.

Virus titration. The infectious titre is determined by a suitable assay.

Wild-type AAV. Where applicable, the absence of wild-type AAV in helper virus seed lots is verified using NAT (*2.6.21*).

Replication-competent viruses. Detection of replication-competent viruses is performed by suitable methods. No replication-competent viruses are found.

Extraneous agents (*2.6.16*). It complies with the test for extraneous agents. In addition, detection of potential contamination with specific insect viruses is required where applicable.

PRODUCTION AND HARVEST

All processing of the cell bank and subsequent cell cultures is done in an area with a suitable classified space with appropriate containment level where no other cells, viruses or vectors are handled at the same time. Any material of human or animal origin used in the preparation of cell suspensions and culture media is qualified. The cell culture medium may contain a pH indicator such as phenol red and suitable antibiotics at the lowest effective concentration. It is preferable to have a substrate free from antibiotics during production, and at no stage during production is penicillin or streptomycin used. A portion of the production cell cultures is set aside as uninfected cell cultures (control cells).

Each single harvest that complies with the following requirements may be used in the preparation of the purified harvest.

Identification. The vector is identified by immunochemical methods (*2.7.1*), NAT (*2.6.21*) or restriction enzyme analysis.

Vector concentration. The titre of infectious vector and the concentration of vector particles in single harvests are determined.

Extraneous agents (*2.6.16*). The single harvest complies with the tests for extraneous agents.

Control cells. Control cells comply with a test for identification (*5.2.3*) and a test for extraneous agents (*2.6.16*) and specific insect viruses, where insect cell lines are used for production.

PURIFIED HARVEST

Several single harvests may be pooled before the purification process. The purification process is validated to demonstrate satisfactory removal of impurities.

Purified harvests that comply with the following requirements may be used in the preparation of the final bulk.

Identification. The vector is identified by immunochemical methods (*2.7.1*), NAT (*2.6.21*) or restriction enzyme analysis.

Genetic characterisation. The following tests are carried out.

- The entire genome of the vector is sequenced for a suitable number of production runs at the level of the purified harvest or final bulk and the analytically determined sequence is compared to the theoretical sequence based on vector construction and available databases.
- Genomic integrity is checked on the vector DNA. PCR analysis may be used.

Vector concentration. The titre of infectious vector and the concentration of vector particles are determined.

Residual viruses used for production. Residual viruses used for production are assessed by plaque assays or tissue culture infective dose 50 ($TCID_{50}$) on permissive cell lines or by quantitative PCR, according to the production system used.

Residual proteins. The concentrations of residual host-cell and/or viral proteins are determined by a suitable immunochemical method (*2.7.1*), unless the process has been validated to demonstrate suitable clearance.

Residual DNA. The content of residual producer-cell DNA and of residual DNA from intermediates such as plasmids and production viruses where applicable, is determined using a suitable method, unless the process has been validated to demonstrate suitable clearance. Quantitative PCR is recommended for its sensitivity and specificity, but other suitable techniques may also be used.

Residual reagents. Where reagents are used during production, tests for these substances are carried out on the purified harvest, unless the process has been validated to demonstrate suitable clearance.

Residual antibiotics. Where antibiotics are used during the production process, their residual concentration is determined by a microbiological assay (adapted from general

method *2.7.2*) or by other suitable methods (for example, liquid chromatography), unless the process has been validated to demonstrate suitable clearance.

FINAL BULK

Several purified harvests may be pooled during preparation of the final bulk. A stabiliser and other excipients may be added. The formulated product is filtered through a bacteria-retentive filter.

Only a final bulk that complies with the following requirement may be used in the preparation of the final lot.

Sterility (*2.6.1*). It complies with the test for sterility.

FINAL LOT

Only a final lot that complies with each of the requirements given below under Identification, Tests and Assay may be released for use.

Provided that the tests for bovine serum albumin (when bovine serum is used to manufacture the vector), replication-competent AAV and residual viruses used for production have been carried out with satisfactory results on the final bulk, they may be omitted on the final lot.

IDENTIFICATION

The vector is identified by immunochemical methods (*2.7.1*), NAT (*2.6.21*) or restriction enzyme analysis.

TESTS

Osmolality (*2.2.35*): within the limits approved for the particular preparation.

pH (*2.2.3*): within the limits approved for the particular preparation.

Extractable volume (*2.9.17*). It complies with the test for extractable volume.

Residual moisture (*2.5.12*): within the limits approved for the particular freeze-dried product.

Bovine serum albumin: where bovine serum has been used during production, not more than the limit approved for the particular preparation, determined by a suitable immunochemical method (*2.7.1*).

Replication-competent AAV concentration: within the limits approved by the competent authority.

Detection of replication-competent AAV is performed by a replication assay on a permissive cell line previously infected with a helper virus and analysis of the replicative forms by Southern blot on low-molecular-weight DNA, or by detection of the *rep* gene by quantitative PCR.

Vector aggregates. Vector aggregates are determined by suitable methods (for example, light scattering).

Sterility (*2.6.1*). It complies with the test for sterility.

Bacterial endotoxins (*2.6.14*): less than the limit approved for the particular preparation.

ASSAY

Vector-particle concentration. Vector-particle concentration is determined using a suitable method such as quantitative PCR by comparison with a standard curve obtained using the recombinant AAV plasmid or an AAV reference standard. This concentration is within the limits approved for the particular product.

Infectious vector titre. Titrate the preparation to be examined by inoculation into cell cultures. Titrate an appropriate vector reference standard to validate each assay.

The infectious vector titre of the preparation to be examined is not less than the minimum amount stated on the label.

The assay is invalid if:

- the confidence interval ($P = 0.95$) of the logarithm of the vector concentration is greater than a value authorised by the competent authority;
- the infectious vector titre of the reference standard is outside limit values defined by a control chart.

Ratio of vector-particle concentration to infectious vector titre: within the limits approved for the particular product.

Expression of the genetic insert product. The expression of the genetic insert product is determined wherever possible, following inoculation of cell cultures with the product at a predetermined multiplicity of infection, by suitable immunochemical (*2.7.1*) or biochemical assays or by flow cytometry (*2.7.24*).

Biological activity. Unless otherwise justified and authorised, biological activity is determined by a suitable *in vitro* or *in vivo* test.

LABELLING

The label states:

- the content of active substance;
- the recommended human dose;
- for freeze-dried preparations:
  - the name or composition and the volume of the reconstituting liquid to be added;
  - the time within which the product is to be used after reconstitution.

04/2013:51500

5.15. FUNCTIONALITY-RELATED CHARACTERISTICS OF EXCIPIENTS

This chapter and the FRCs sections in specific monographs are not mandatory and are published for information and guidance.

PREAMBLE

Excipients that have previously been evaluated for safety are used in the formulation of pharmaceutical preparations to bring functionality to the formulation. The intended function of an excipient is to guarantee the required physicochemical and biopharmaceutical properties of the pharmaceutical preparation.

The functionality of an excipient is determined by its physical and chemical properties and, in some cases, also by its content of by-products or of additives used to improve the intended functionality. In addition, the functionality may depend on complex interactions between the constituents of the formulation and stresses related to the process. Excipient functionality can therefore be evaluated only in the context of a particular formulation and manufacturing process, frequently by the use of a number of analytical methods.

Monographs of the European Pharmacopoeia on excipients are designed to ensure acceptable quality for users. Information on the appearance and characters of the excipient, and requirements concerning identity, chemical and microbiological purity and physical characteristics associated with the chemical structure, such as optical rotation, are given in specific monographs and in the general monograph *Substances for pharmaceutical use (2034)*.

Certain excipient properties, such as the particle size of an excipient intended for a solid dosage form or the molecular mass of a polymeric material used as a viscosity-increasing agent, may however relate to functionality in a more general sense. Such functionality-related characteristics (FRCs) can be controlled and may be subject to a product-specific quality specification when the pharmaceutical development work has demonstrated their critical role for the manufacturing process and quality attributes of the medicinal product. Such critical FRCs may be described as critical quality attributes (CQAs) for the medicinal product.

Knowledge of FRCs may facilitate the application of process analytical technology (PAT).

FRCs are included in excipient monographs to aid manufacturers of medicinal products in establishing specifications based on standard analytical methods. They provide manufacturers and users of excipients with a common language to support the supply of excipients with specified properties. FRCs may be labelled (in the certificate of analysis, for example) by the excipient manufacturer with a reference to the Pharmacopoeia monograph, thus indicating the method used to test a particular characteristic. The FRCs section in specific monographs contains FRCs that are known to have an impact on the functionality of the excipient for the stated uses. The uses and the FRCs listed are not exhaustive due to the multiple uses of many excipients and the development of new uses.

REGULATORY GUIDANCE

According to current regulatory guidelines, for example ICH Q8 Pharmaceutical Development, the marketing authorisation application should discuss the excipients chosen, their concentration, and the characteristics that can influence the medicinal product performance or manufacturability relative to the respective function of each excipient. The ability of excipients to provide their intended functionality and to perform throughout the intended medicinal product shelf life should also be demonstrated. The information on excipient performance can be used as appropriate to justify the choice and quality attributes of the excipient.

Excipients are normally produced by batch processes, so there is a possibility of batch-to-batch variation from the same manufacturer. Excipients from different sources may not have identical properties with respect to their use in a specific formulation. The variation in chemical and physical properties of excipients is a key consideration when developing a medicinal product and its manufacturing process. Many excipients are of natural origin and composed of a mixture of chemically related compounds. Other excipients are made in chemical plants primarily designed for producing chemicals for industries other than the pharmaceutical industry. The excipient manufacturer's process may therefore be focused on the chemical characteristics and some physical properties addressing the manufacturer's primary market. In many cases, the excipient manufacturer has limited knowledge of the pharmaceutical uses of the excipient.

The key to a successful, robust formulation is to understand the chemical and physical nature of the active substance(s) and the excipients alone, and how their properties interact with other constituents of the formulation and the manufacturing process. During pharmaceutical development, the properties that are critical to the manufacturing process and performance of the medicinal product are identified. Having identified the critical properties of the excipients, preferably by a risk-based approach, pharmaceutical development may establish the acceptable range of the critical material attributes including both the physical and the chemical property variation. The FRCs concerned may not be properties controlled by the excipient manufacturer and are therefore variable. The design of a robust manufacturing process for the medicinal product that limits the effect of the normal excipient variability is preferable.

Evaluation of the physical and chemical grades and, when appropriate, the setting of a specification for the critical characteristics, is part of the pharmaceutical development irrespective of the non-mandatory character of FRCs. This development should be seen in light of regulatory guidance on pharmaceutical development and the desired regulatory flexibility based on establishing the acceptable range of material properties within the design space.

PHYSICAL GRADES

Excipients that are particulate solids can be available in a variety of physical grades, for example with regard to particle-size distribution, which is usually controlled by the excipient supplier. However, FRCs for these excipients may concern a wide range of properties, resulting from solid-state properties and properties of the particulate solid, which may not be controlled by the excipient supplier.

Properties of particulate solids include for example particle-size distribution, specific surface area, bulk density, flowability, wettability and water sorption. Depending on the size range, the particle-size distribution can be determined by sieve analysis (see general chapter *2.9.38. Particle-size distribution estimation by analytical sieving*) or instrumental methods, for example *2.9.31. Particle size analysis by laser light diffraction*. The method described in general chapter *2.9.26. Specific surface area by gas adsorption* is based on the Brunauer-Emmett-Teller (BET) technique. Methods to characterise flowability and bulk density of powders are described in general chapters *2.9.36. Powder flow* and *2.9.34. Bulk density and tapped density*. Solid-state properties may have an impact on the wettability (see general chapter *2.9.45. Wettability of porous solids including powders*) and water-solid interactions (see general chapter *2.9.39. Water-solid interactions: determination of sorption-desorption isotherms and of water activity)* of particulate solids.

Examples of solid-state properties to be considered in the development of solid dosage forms include polymorphism, pseudopolymorphism, crystallinity and density. Techniques to study them are given in general chapters *5.9. Polymorphism*, *5.16. Crystallinity* and *2.2.42. Density of solids*.

CHEMICAL GRADES

Excipients that are available in different chemical grades are of natural, semi-synthetic or synthetic origin. Specific monographs usually control the chemical composition of excipients that are composed of a mixture of related compounds, for example the composition of fatty acids in vegetable oils or surfactants. There are, however, specific monographs in the Pharmacopoeia each describing a class of polymeric materials that may vary in their composition with regard to the structure of homopolymers, block polymers and copolymers, the degree of polymerisation, and thus the molecular mass and mass distribution, the degree of substitution and in some cases even different substituents on the polymer backbone. This variation may, however, have a profound effect on the functionality of the excipient and should be subject to investigations during the pharmaceutical development, preferably to establish the acceptable range of each characteristic being critical to the manufacturing process and performance of the end-product.

FUNCTIONALITY-RELATED CHARACTERISTICS SECTION IN MONOGRAPHS

Monographs on excipients may have a section entitled 'Functionality-related characteristics'. This section is included for information for the user and is not a mandatory part of the monograph. The section gives a statement of characteristics that are known to be relevant for certain uses of the excipient. The use for which the characteristic is relevant is stated. For other uses, the characteristic may be irrelevant. For this reason, the section should not be seen simply as a supplement to the monograph. It is the responsibility of the manufacturer of the medicinal product to decide how the information on FRCs will be applied in the manufacturing process in light of the use of the excipient and data from pharmaceutical development.

The information on the functionality-related characteristics may be given in different ways:

- name of the FRC;
- name of the FRC and a recommended method for its determination, referring wherever possible to a general chapter of the Pharmacopoeia;
- name of the FRC with a recommended method for its determination and typical values, which may be in the form of tolerances from the nominal value.

A given characteristic may be the subject of a mandatory requirement in the monograph. If it is relevant for certain uses, it is also referred to in the FRCs section as a relevant characteristic that the manufacturer of the medicinal product may choose to specify for the grade used of a particular pharmaceutical preparation.

The section on FRCs is intended to reflect current knowledge related to the major uses of an excipient. In view of the multiple uses of some excipients and the continuous development of new uses, the section may not be complete. In addition, the methods cited for the determination of a particular characteristic are given as recommendations for methods that are known to be satisfactory for the purpose, and the use of other methods is not excluded.

PHARMACOPOEIAL HARMONISATION

A number of excipient monographs are subject to pharmacopoeial harmonisation among the European, Japanese and United States pharmacopoeias (see *5.8. Pharmacopoeial harmonisation*). Introduction of the FRCs section in the monographs of the European Pharmacopoeia means that the presentation of harmonised monographs differs. Tests for physical and chemical characteristics regarded as both quality-related and functionality-related in the European Pharmacopoeia are, in the 2 other pharmacopoeias, included only in the body of the monograph. The different format has no implications on the specification of excipient characteristics for the manufacturer of the medicinal product. Current regulatory guidance recommends the identification and specification of only such critical properties that impact the manufacturing process and the performance of the end-product. The different legal environments of the 3 pharmacopoeias allow for different formats of the monographs without affecting the pharmacopoeial harmonisation status.

GLOSSARY

Critical characteristic: any physical or chemical material characteristic that has been demonstrated to impact significantly on the manufacturability and/or performance of the medicinal product.

Design space: the multidimensional combination and interaction of input variables (e.g. material attributes) and process parameters that have been demonstrated to provide assurance of quality.

Functionality-related characteristic: a controllable physical or chemical characteristic of an excipient that is shown to impact on its functionality.

Process analytical technology (PAT): a system for designing, analysing and controlling manufacturing through timely measurements (i.e. during processing) of critical quality and performance attributes of raw and in-process materials and processes with the goal of ensuring final product quality.

04/2012:51600
corrected 7.6

5.16. CRYSTALLINITY

This chapter provides general information on crystallinity and refers to the various techniques described in the European Pharmacopoeia that are used for its determination.

INTRODUCTION - THE CONCEPT OF CRYSTALLINITY

Most organic and inorganic compounds of pharmaceutical relevance exist as a solid material, which can be characterised by a structure located between a perfectly ordered crystal and an amorphous material.

Real crystals lie somewhere between an ideal crystal state and the amorphous state. The position of a crystal on a scale bounded by these 2 extremes is termed its crystallinity.

A perfectly ordered crystal is an ideal state that is seldom, if ever, achieved. The structural units of a crystal, termed unit cells, are repeated regularly and indefinitely in 3 dimensions in space. The unit cell has a definite orientation and shape defined by the translational vectors *a, b* and *c*, and the angles α, β and γ, and hence has a definite volume, *V*, that contains the atoms and molecules necessary for forming the crystal. A crystalline system is defined by 3 long-range order symmetry operators (translational, orientational and conformational); the various mesophases (liquid crystals, crystals and plastic crystals) have 1 or 2 of the long-range symmetry operators and the ideal amorphous state is defined by the absence of all 3 operators.

Each crystal can be classified as a member of one of 7 possible crystal systems that are defined by the relationships between the individual dimensions *a, b* and *c* and between the individual angles α, β and γ of the unit cell. The structure of a given crystal may be classified according to one of the 7 crystal systems, to one of the 14 Bravais lattices and to one of the 230 space groups. All the 230 possible space groups, their symmetries and the symmetries of their diffraction patterns are compiled in the International Tables for Crystallography.

Many substances are capable of crystallising in more than one type of crystal lattice, which is known as polymorphism. The occurrence of polymorphism is a common phenomenon among organic molecules, giving rise to different physico-chemical properties. Crystalline polymorphs have the same chemical composition but different internal crystal structures and, therefore, possess different physico-chemical properties. The different crystal structures in polymorphs are due to different atomic packing arrangements and/or different conformations of the molecules (see chapter *5.9. Polymorphism*).

The other extreme of a crystal state is the ideal or true amorphous state, where all long-range order is lost. For most organic systems certain short-range order remains, but this is not expected to extend over distances much larger than nearest neighbour (NN) or next nearest neighbour (NNN) interactions, which are typically less than 2-2.5 nm for small organic molecules.

Amorphous material is characterised by the absence of distinct reflections in the X-ray powder diffraction (XRPD) pattern (*2.9.33*).

The crystallinity of a real powder can be considered by 2 models of crystallinity. In the 1-state model all particles will be of the same crystallinity whereas in the 2-state model each particle can be either crystalline or amorphous, such that the actual crystallinity of the powder is the weighted average of these 2 extreme crystallinities. Such a powder is obtained when pure crystalline and amorphous phases are physically mixed. In reality, a powder probably contains particles with different degrees of crystallinity, just as it may contain particles with different sizes and shapes.

The extent of disorder in a crystalline solid can affect many physico-chemical properties of substances for pharmaceutical use. Because of the great relevance of these properties, it is important to be able to assess the extent of disorder or the crystallinity of a solid by a suitable quantitative method.

METHODS FOR MONITORING AND DETERMINING CRYSTALLINITY

Various methods are available for determining the crystallinity of a solid. Many techniques cannot detect or quantify these properties independently; for this reason, it is useful to combine several of the methods described below. Such methods often do not give accurate results and limits of quantitation are usually much greater than those for chemical impurities. In addition, certain assumptions have to be made about the relationship between standards used for calibration, which are typically mixtures of crystalline and amorphous particles (2-state model), and the samples to be analysed that are likely to have at least a small component of material exhibiting 1-state model behaviour. Finally, the lack of well-defined standards for 100 per cent crystalline or 100 per cent amorphous material complicates the validation of such methods. As explained above, it is obvious that different amorphous or non-crystalline phases exist and even co-exist in a solid powder. These different non-crystalline forms of a solid can give different responses depending on the techniques used for determining the degree of crystallinity.

X-ray powder diffraction (*2.9.33*). XRPD is still the most commonly used method for determining the degree of crystallinity, although this method suffers from some limitations due to peak broadening, amorphous halo and preferred orientation, which make interpretation and quantitation difficult.

XRPD alone is often insufficient to distinguish between the different non-crystalline phases. The X-ray diffraction pattern of a purely amorphous and nanocrystalline phase is characteristic of a broad diffuse halo. In-depth analysis of the X-ray diffraction patterns will show that the diffuse halo in the pattern of nanocrystalline material shows some correlation to the pattern of the parent crystalline phase, while in the case of a pure amorphous phase such a correlation does not exist. Additional techniques may be required to establish the true nature of X-ray amorphous materials.

Thermal analysis. Thermal analysis (*2.2.34*) of crystalline materials exhibits a melting transition that is often accompanied by decomposition or evaporation of solvents. In the case of true amorphous materials, thermal analysis reveals a glass transition, whereas only a melt would be expected for a nanocrystalline material.

Microcalorimetry (*2.2.61*). It is a highly sensitive technique which allows the determination of the rate and extent of chemical reactions, changes of phase or changes of structure. Amorphous parts of a substance can recrystallise by subjecting the sample to higher relative humidity or an atmosphere containing organic vapour. The measurement of the heat of recrystallisation enables the amorphous content to be determined from the enthalpy of recrystallisation. By relating the output from the microcalorimeter for a sample to that obtained for an amorphous standard, it is possible to quantify the amorphous content of the sample. The range of

amorphous content covered by this method depends on the individual substance to be tested; in favourable cases limits of detection below 1 per cent can be reached.

Solution calorimetry (*2.2.61*). Solution calorimetry provides a means of determining enthalpy of solution for a solid substance. The crystallinity of the solid sample to be examined is given by the enthalpy of solution of the solid sample (ΔH_x^s) minus the enthalpy of solution of the chosen reference standard of the same substance (ΔH_r^s) when determined under the same conditions. Because the reference standard is usually chosen for its perceived high crystallinity, its enthalpy of solution is usually algebraically greater (more endothermic or less exothermic) than that of the solid sample to be examined in the same solvent. Consequently, the crystallinity determined is a negative quantity with the SI units kJ/mol or J/g (J/kg is avoided because of its unwieldiness and potential for error). The preference for a negative value with respect to a highly crystalline reference standard recognises the fact that most samples have a lower crystallinity than this reference standard.

Near-infrared (NIR) spectroscopy. Near-infrared (NIR) spectroscopy (*2.2.40*) is another technique used to measure the degree of crystallinity, and has also been proven to be useful in studies of polymorphism. The NIR spectrum of a sample contains both physical and chemical information. Being non-invasive, non-destructive and operable at room temperature, the method is a valuable tool to assess changes in the amorphous and crystalline state.

Infrared absorption spectrophotometry and Raman spectrometry. Infrared absorption spectrophotometry (*2.2.24*) and Raman spectrometry (*2.2.48*) are other techniques used to measure the degree of crystallinity, and have also been proven to be useful in studies of polymorphism. The IR spectrum and Raman spectrum of a sample contain both physical and chemical information.

Solid-state NMR. Solid-state nuclear magnetic resonance spectrometry (ss NMR) (*2.2.33*) can be used to provide information about polymorphism and related relative molecular conformations. However, some caution has to be exercised in the interpretation of results, since it is not always simple to distinguish between samples that comprise a mixture of different physical forms (2-state model) and those that comprise crystals having disorder with exchange that is slow on the NMR timescale. Similarly, samples that contain defects arising from different molecular conformations or slightly different packing arrangements (1-state model) may show additional signals in the spectra. Solid-state NMR may be quite sensitive to this, even if lattice parameters are hardly affected and, consequently, little or no change is observed by XRPD. It is evident that the crystallinity of substances for pharmaceutical use can be complex, and both crystalline defects and amorphous material may co-exist.

Optical microscopy. A method to detect whether or not particles are crystalline is to use a polarising microscope (*2.9.37*), where particles show birefringence and extinction positions when the microscope stage is revolved.

5.17. RECOMMENDATIONS ON METHODS FOR DOSAGE FORMS TESTING

07/2010:51701

5.17.1. RECOMMENDATIONS ON DISSOLUTION TESTING

This general chapter is non-mandatory; it provides information on dissolution testing, on recommended dissolution media and on the expression of dissolution specifications for oral dosage forms (see general chapter 2.9.3. Dissolution test for solid dosage forms). This information represents generally accepted parameters used in the field of dissolution.

In the determination of the dissolution rate of the active substance(s) of a solid dosage form, the following are to be specified:

- the apparatus to be used, and in cases where the flow-through apparatus is specified, which flow-through cell is to be used;
- the composition, the volume and the temperature of the dissolution medium;
- the rotation speed or the flow rate of the dissolution medium;
- the time, the method and the amount for sampling of the test solution or the conditions for continuous monitoring;
- the method of analysis;
- the acceptance criteria.

The choice of apparatus to be used depends on the physico-chemical characteristics of the dosage form. When a large quantity of dissolution medium is required to ensure sink conditions, or when a change of pH is necessary, the flow-through apparatus may be preferred.

EXPERIMENTAL TESTING CONDITIONS

The use of the basket and the paddle apparatus and the reciprocating cylinder apparatus is generally based on the principle of operating under sink conditions, i.e. in such a manner that the material already in solution does not exert a significant modifying effect on the rate of dissolution of the remainder. Sink conditions normally occur in a volume of dissolution medium that is at least 3-10 times the saturation volume.

In general, an aqueous medium is used. The composition of the medium is chosen on the basis of the physico-chemical characteristics of the active substance(s) and excipient(s) within the range of conditions to which the dosage form is likely to be exposed after its administration. This applies in particular to the pH and the ionic strength of the dissolution medium.

The pH of the dissolution medium is usually set between pH 1 and pH 8. In justified cases, a higher pH may be needed. For the lower pH values in the acidic range, *0.1 M hydrochloric acid* is normally used. Recommended dissolution media are described hereafter.

Water is recommended as a dissolution medium only when it is proven that the pH variations do not have an influence on the dissolution characteristics.

In specific cases, and subject to approval by the competent authority, dissolution media may contain enzymes, surfactants, further inorganic substances and organic substances. For the testing of preparations containing poorly aqueous-soluble active substances, modification of the medium may be necessary. In such circumstances, a low concentration of surfactant is recommended; it is recommended to avoid the use of organic solvents.

Gases dissolved in the dissolution medium can affect the results of the dissolution test. This is true in particular for the flow-through apparatus, where de-aeration of the medium is necessary to avoid the formation of gas bubbles in the flow-through cell. A suitable method of de-aeration is as follows: heat the medium while stirring gently to about 41 °C, immediately filter under vacuum using a filter with a porosity of 0.45 µm or less, with vigorous stirring, and continue stirring under vacuum for about 5 min. Other de-aeration techniques for removal of dissolved gases may be used.

Using the paddle or basket apparatus, the volume of dissolution medium is normally 500-1000 mL. A stirring speed of between 50 r/min and 100 r/min is normally chosen; it must not exceed 150 r/min.

For the flow-through apparatus, the liquid flow rate is normally set between 4 mL/min and 50 mL/min.

RECOMMENDED DISSOLUTION MEDIA

The following dissolution media may be used.

Table 5.17.1.-1. – *Examples of dissolution media*

pH	Dissolution media
pH 1.0	HCl
pH 1.2	NaCl, HCl
pH 1.5	NaCl, HCl
pH 4.5	Phosphate or acetate buffer
pH 5.5 and pH 5.8	Phosphate or acetate buffer
pH 6.8	Phosphate buffer
pH 7.2 and pH 7.5	Phosphate buffer

The composition and preparation of these various media are indicated below.

Hydrochloric acid media

- *0.2 M hydrochloric acid*.
- *0.2 M sodium chloride*. Dissolve 11.69 g of *sodium chloride R* in *water R* and dilute to 1000.0 mL with the same solvent.

For preparing media with the pH values indicated in Table 5.17.1.-2, mix 250.0 mL of 0.2 M sodium chloride and the specified volume of *0.2 M hydrochloric acid*, and dilute to 1000.0 mL with *water R*.

Table 5.17.1.-2. – *Hydrochloric acid media*

pH	HCl (mL)
1.2	425.0
1.3	336.0
1.4	266.0
1.5	207.0
1.6	162.0
1.7	130.0
1.8	102.0
1.9	81.0
2.0	65.0
2.1	51.0
2.2	39.0

The hydrochloric acid media may also be prepared by replacing sodium chloride with potassium chloride.

Acetate buffer solutions

- *2 M acetic acid.* Dilute 120.0 g of *glacial acetic acid R* to 1000.0 mL with *water R*.
- *Acetate buffer solution pH 4.5.* Dissolve 2.99 g of *sodium acetate R* in *water R*. Add 14.0 mL of 2 M acetic acid and dilute to 1000.0 mL with *water R*.
- *Acetate buffer solution pH 5.5.* Dissolve 5.98 g of *sodium acetate R* in *water R*. Add 3.0 mL of 2 M acetic acid and dilute to 1000.0 mL with *water R*.
- *Acetate buffer solution pH 5.8.* Dissolve 6.23 g of *sodium acetate R* in *water R*. Add 2.1 mL of 2 M acetic acid and dilute to 1000.0 mL with *water R*.

Phosphate buffer solutions

For preparing buffers with the pH values indicated in Table 5.17.1.-3, mix 250.0 mL of *0.2 M potassium dihydrogen phosphate R* and the specified volume of *0.2 M sodium hydroxide*, and dilute to 1000.0 mL with *water R*.

Table 5.17.1.-3. – *Phosphate buffer solutions*

pH	5.8	6.0	6.2	6.4	6.6	6.8
NaOH (mL)	18.0	28.0	40.5	58.0	82.0	112.0
pH	7.0	7.2	7.4	7.6	7.8	8.0
NaOH (mL)	145.5	173.5	195.5	212.0	222.5	230.5

Other phosphate buffer solutions

- *Phosphate buffer solution pH 4.5.* Dissolve 13.61 g of *potassium dihydrogen phosphate R* in 750 mL of *water R*. Adjust the pH if necessary with *0.1 M sodium hydroxide* or with *0.1 M hydrochloric acid*. Dilute to 1000.0 mL with *water R*.
- *Phosphate buffer solution pH 5.5 R.*
- *Phosphate buffer solution pH 6.8 R1.*
- *Buffer solution pH 7.2 R.*
- *0.33 M phosphate buffer solution pH 7.5 R.*

Simulated intestinal fluid pH 6.8

Mix 77.0 mL of *0.2 M sodium hydroxide*, 250.0 mL of a solution containing 6.8 g of *potassium dihydrogen phosphate R*, and 500 mL of *water R*. Add 10.0 g of *pancreas powder R*, mix and adjust the pH if necessary. Dilute to 1000.0 mL with *water R*.

Simulated gastric fluid

Dissolve 2.0 g of *sodium chloride R* and 3.2 g of *pepsin powder R* in *water R*, add 80 mL of *1 M hydrochloric acid* and dilute to 1000.0 mL with *water R*. If required, pepsin powder may be omitted.

Increasing pH

For a test involving increasing pH, one of the following sequences may be used:

Time (h)	0 - 1	1 - 2	2 - 3	3 - 4	4 - 5	5 - 6	6 - 7	7
pH	1.0							
pH	1.2	6.8						
pH	1.2	2.5	4.5		7.0		7.5	
pH	1.5	4.5			7.2			

To achieve this pH variation, it is possible either:

- to substitute one buffer solution for another (whole substitution);
- to remove only half of the medium each time (half change method) and replace it with a buffer solution of higher pH: the initial pH is 1.2 and the second solution is phosphate buffer solution pH 7.5; or,
- to an initial solution at pH 1.5, to add a dose of a powder mixture containing *tris(hydroxymethyl)aminomethane R* and *anhydrous sodium acetate R* to obtain pH 4.5 and a second dose to obtain pH 7.2, as described below:
  - *hydrochloric acid pH 1.5*: dissolve 2 g of *sodium chloride R* in *water R*, add 31.6 mL of *1 M hydrochloric acid* and dilute to 1000.0 mL with *water R*;
  - *buffer solution pH 4.5*: mix 2.28 g of *tris(hydroxymethyl)aminomethane R* with 1.77 g of *anhydrous sodium acetate R*; dissolve this mixture in the hydrochloric acid pH 1.5 described above;
  - *buffer solution pH 7.2*: mix 2.28 g of *tris(hydroxymethyl)aminomethane R* with 1.77 g of *anhydrous sodium acetate R*; dissolve this mixture in the buffer solution pH 4.5 described above.

The flow-through cell may be used for the continuous change of pH.

QUALIFICATION AND VALIDATION

Due to the nature of the test method, quality by design is an important qualification aspect for *in vitro* dissolution test equipment. Any irregularities such as vibration or undesired agitation by mechanical imperfections are to be avoided.

Qualification of the dissolution test equipment has to consider the dimensions and tolerances of the apparatus. Critical test parameters, such as temperature and volume of dissolution medium, rotation speed or liquid flow rate, sampling probes and procedures, have to be monitored periodically during the periods of use.

The performance of the dissolution test equipment may be monitored by testing a reference product that is sensitive to hydrodynamic conditions. Such tests may be performed periodically or continuously for comparative reasons with other laboratories.

During testing, critical inspection and observation are required. This approach is especially important to explain any outlying results.

Validation of automated systems, whether concerning the sampling and analytical part or the dissolution media preparation and test performance, has to consider accuracy, precision, and the avoidance of contamination by any dilutions, transfers, cleaning and sample or solvent preparation procedures.

EXPRESSION OF DISSOLUTION SPECIFICATIONS FOR ORAL DOSAGE FORMS

The dissolution specification is expressed in terms of the quantity (Q) of active substance dissolved in a specified time, expressed as a percentage of the content stated on the product label.

Conventional-release dosage forms

In most cases, when tested under reasonable and justified test conditions, the acceptance criteria at level S_1 are that at least 80 per cent of the active substance is released within a specified time, typically 45 min or less. This corresponds to a Q value of 75 per cent, since, as referred to in Table 2.9.3.-1, for level S_1 the individual value of each of the 6 units tested is not less than Q + 5 per cent, i.e. not less than 80 per cent.

Typically, a single-point acceptance criterion is sufficient to demonstrate that the majority of the active substance has been released, although in certain circumstances it may be necessary to test at additional time point(s), in order to demonstrate adequate dissolution.

Prolonged-release dosage forms

The dissolution test acceptance criteria for prolonged-release dosage forms is normally expected to consist of 3 or more points. The 1st specification point is intended to prevent unintended rapid release of the active substance ('dose dumping'). It is therefore set after a testing period corresponding to a dissolved amount typically of

20 per cent to 30 per cent. The 2nd specification point defines the dissolution pattern and so is set at around 50 per cent release. The final specification point is intended to ensure almost complete release, which is generally understood as more than 80 per cent release.

Delayed-release dosage forms

A delayed-release dosage form may release the active substance(s) fractionally or totally according to the formulation design when tested in different dissolution media, e.g. in increasing pH conditions. Dissolution specifications therefore have to be decided on a case-by-case basis.

Gastro-resistant dosage forms require at least 2 specification points in a sequential test and 2 different specifications in a parallel test. In a sequential test, the 1st specification point represents an upper limit and is set after 1 h or 2 h in acidic medium, and the 2nd after a pre-set time period of testing in an adequate buffer solution (preferably pH 6.8).

In most cases the acceptance criteria at level B_1 are that at least 80 per cent of the active substance is released. This corresponds to a Q value of 75 per cent, since, as referred to in Table 2.9.3.-4, for level B_1 the individual value of each of the 6 units tested is not less than Q + 5 per cent, i.e. not less than 80 per cent.

04/2013:52000

5.20. METAL CATALYST OR METAL REAGENT RESIDUES

The European Medicines Agency (EMA) has adopted a guideline on residues of metal catalysts or metal reagents that may be present in substances for pharmaceutical use (in this context, synonym of 'pharmaceutical substances' used in the EMA guideline) or in drug products. This guideline prescribes limits for the content of those metals which may remain in substances for pharmaceutical use and medicinal products. This guideline, the text of which is reproduced below (except the appendices), is applicable to new and existing marketed products.

The European Pharmacopoeia (Ph. Eur.) applies this guideline to all substances for pharmaceutical use (except for veterinary use) whether or not they are the subject of a monograph. All substances are to be tested for the content of metals likely to be present. The guideline does not apply to substances for veterinary use only.

Where the limits to be applied comply with those given below, tests for metal residues are generally not mentioned in specific monographs since the metals used may vary from one manufacturer to another and the requirements of this general chapter are applied via the general monograph *Substances for pharmaceutical use (2034)*. The competent authority is to be informed of the metals used as reagents or catalysts during the production process. This information has to be included in the dossier submitted for a certificate of suitability of the monographs of the Ph. Eur. and is mentioned in the certificate.

The methodology described in general chapter *2.4.20. Determination of metal catalyst or metal reagent residues* is to be applied wherever possible.

The end of the 5-year transition period mentioned in Section 2 *Definition and scope* of the EMA guideline corresponds to 1 September 2013.

GUIDELINE ON THE SPECIFICATION LIMITS FOR RESIDUES OF METAL CATALYSTS OR METAL REAGENTS (EMEA/CHMP/SWP/4446/2000)

EXECUTIVE SUMMARY
1. INTRODUCTION (BACKGROUND)
2. DEFINITION AND SCOPE
3. LEGAL BASIS
4. MAIN GUIDELINE TEXT
4.1. CLASSIFICATION
4.2. EXPOSURE LIMITS
4.3. SETTING CONCENTRATION LIMITS METAL RESIDUES
4.3.1. General
4.3.2. Pharmaceutical products applied via the oral, parenteral or inhalation route of administration
4.3.3. Pharmaceutical products applied via other routes of administration
4.3.4. Pharmaceutical products used for short-term and for life-saving indications
4.4. ANALYTICAL PROCEDURES
4.5. BATCH RESULTS, TESTING FREQUENCY AND DELETING OF A TEST FROM THE SPECIFICATION
4.6. REPORTING LEVELS OF METALLIC RESIDUES
5. GLOSSARY
6. REFERENCES (SCIENTIFIC AND/OR LEGAL)

EXECUTIVE SUMMARY

The objective of this guideline is to recommend maximum acceptable concentration limits for the residues of metal catalysts or metal reagents that may be present in pharmaceutical substances or in drug products. A pharmaceutical substance is defined here as a substance that is either an active pharmaceutical ingredient or an excipient.

The metals addressed in this guideline are normally used as process catalysts or reagents during the synthesis of pharmaceutical substances. Their use may lead to residues in the final pharmaceutical substance, and consequently in the final drug product. Such metal residues do not provide any therapeutic benefit to the patient and should therefore be evaluated and restricted on the foundation of safety- and quality-based criteria. The guideline may be updated to include other metal residues in due course.

This guideline classifies metal residues into 3 categories based on their individual level of safety concern and sets concentration limits. The limits are based on the maximal daily dose, duration of treatment, and administration route of the drug product as well as the permitted daily exposure (PDE) of the metal residue. The guideline also includes recommendations on testing strategies, analytical procedures and reporting levels in pharmaceutical substances or drug products.

1. INTRODUCTION

Metal residues in pharmaceutical substances or drug products may originate from several sources like metal catalysts and metal reagents used during the synthesis of the active pharmaceutical substance and the excipients, manufacturing equipment and piping, bulk packaging, the environment, cleaning solvents etc. Since metal residues do not provide any therapeutic benefit to the patient, and product risk should commensurate with the level of product benefit, the specification of a pharmaceutical substance or the drug product may need to include a limit and validated method for metal residues to guarantee acceptable product quality. The considerations for such a requirement should be made in a manner that is consistent with safety- and quality-based criteria as well as GMP, GDP and any other relevant provisions.

The objective of this guideline is to recommend maximum acceptable concentration limits of metal residues arising from the use of metal catalysts or metal reagents in the synthesis of drug substances and excipients. Since the use of these metals is restricted to defined chemical reactions, limitation of their residues in pharmaceutical substances themselves will normally be sufficient. Thus, limitation of these metal residues in the final drug product will normally not be necessary. The concentration limits in this guideline are based on safety criteria and assure an adequate quality of the pharmaceutical substance and the drug product. It is therefore not considered appropriate to expect that the pharmaceutical industry tightens the concentration limits in the regulatory dossier on basis of GMP, process capabilities, or any other quality criteria.

Since the origin of metal residues is irrelevant regarding their potential toxic effects, the concentration limits in this guideline are in principle also applicable to residues from other sources than catalysts and reagents. However, for these other sources adoption of a concentration limit and a validated method in the specification is only necessary in the very exceptional cases where these residues are known to be insufficiently limited by GMP, GDP or any other relevant provision. Pharmaceutical companies are not supposed to perform extensive tests on metal residue findings of unknown sources to comply with this guideline. They may rely on general information from trustworthy suppliers.

The metals that are currently included in this guideline are listed in Table 1. The guideline may be updated to include other metal residues in due course. Any interested party can make a request and submit the relevant safety data.

The classification and concentration limits of the currently included metals may also change when new safety data becomes available.

The following assumptions and/or default values have been used during establishment of the concentration limits:

- body weight (bw) of an adult: 50 kg;
- breathing volume of an adult: 20 m^3 per day (24 h);
- occupational (workplace) inhalation exposure: 8 h per day (24 h);
- exposure limits were established using uncertainty factors as described in appendix 3 of the ICH Q3C guidance;
- for pragmatic reasons a number of uncertainty factors were adapted to arrive at a final safe and practical PDE setting - Q3C method for uncertainty factor (UF) calculation plus additional pragmatic factor for PDE calculation;
- acceptable additional lifetime cancer risk: an increased cancer risk of 1 in 100,000 was identified as acceptable for genotoxic impurities in pharmaceuticals by the CHMP.

2. DEFINITION AND SCOPE

Metal catalysts and metal reagents are defined here as chemical substances that are used to change the rate of chemical reactions or which act on other chemical substances in chemical reactions. For the purpose of this guideline, metal catalysts and metal reagents refer to metals used in the synthesis of the active pharmaceutical ingredient, the synthesis of any of the pharmaceutical excipients, or the synthesis of any of the pharmaceutical excipients used during the manufacture of the drug product but no longer present in the drug product itself. Metal residues can either be present in the original form of the metal or as a form of the metallic element altered by downstream chemical processing.

This guideline applies to new and existing marketed drug products. However, for existing marketed drug products a time limit of 5 years is set for the implementation of the guideline in case an earlier implementation is not feasible. Following this 5 years implementation, transitional period only drug products which have been manufactured using pharmaceutical substances which comply with the guideline can be released to the market. This guideline does not apply to potential new drug substances or to excipients used during the clinical research stages of development of a medicinal product. During the clinical research stages of development, higher limits of metal residues might be acceptable.

The guideline does also not apply to metals that are deliberate components of the pharmaceutical substance (such as a counter-ion of a salt) or metals that are used as a pharmaceutical excipient in the drug product (e.g. an iron oxide pigment). As described in the introduction, the guideline does normally not apply to extraneous metal contaminants that are more appropriately addressed by GMP, GDP or any other relevant quality provision.

The route of administration may influence the actual exposure of the human body to the metal. Due to the limited oral bioavailability of many metals, this guideline applies different limits to oral and parenteral routes of administration. As other routes of exposure may have different toxicological implications, specific limits have also been set for the inhalation exposure to some metals. When the exposure is short, the PDEs mentioned in this guideline may be adapted as indicated in section 4.3.

3. LEGAL BASIS

This guideline should be read in conjunction with Directive 2001/83/EC as amended and in conjunction with all relevant CHMP guidance documents, with special emphasis on:

- Note for Guidance on Impurities in New Drug Products (CPMP/ICH/2738/99, ICHQ3B (R))
- Note for Guidance on Impurities Testing: Impurities in New Drug Substances (CPMP/ICH/2737/99, ICHQ3A)
- Note for Guidance on Impurities: Residual Solvents (CPMP/ICH/283/95 in conjunction with CPMP/ICH/1507/02, CPMP/ICH/1940/00 corr, CPMP/QWP/450/03 and CPMP/QWP/8567/99)
- Guideline on the Limits of Genotoxic Impurities (EMEA/CHMP/QWP/251344/2006 and CPMP/SWP/5199/02)
- Validation of Analytical Procedures: Text and Methodology (CHMP/ICH/381/95, ICHQ2(R1))

4. MAIN GUIDELINE TEXT

4.1. CLASSIFICATION

The term 'tolerable daily intake' (TDI) is used by the International Program on Chemical Safety (IPCS) to describe exposure limits of toxic chemicals, whereas the term 'acceptable daily intake' (ADI) is used by the World Health Organization (WHO) and other national and international health authorities and institutes. Following the ICH Q3C guideline on residual solvents, a 'new' term was chosen to avoid confusion of terms and their meaning. As for the ICH Q3C guideline, the new term is called the 'permitted daily exposure' (PDE). For the purpose of this guideline, the PDE is defined as the pharmaceutically maximum acceptable exposure to a metal on a chronic basis that is unlikely to produce any adverse health effect.

Metal residues should be evaluated for their potential risk to human health and placed into one of the following 3 classes:

Class 1 metals: metals of significant safety concern. This group includes metals that are known or suspect human carcinogens, or possible causative agents of other significant toxicity.

Class 2 metals: metals of low safety concern. This group includes metals with lower toxic potential to man. They are generally well tolerated up to exposures that are typically encountered with administration of medicinal products. They may be trace metals required for nutritional purposes or they are often present in food stuffs or readily available nutritional supplements.

Class 3 metals: metals of minimal safety concern. This group includes metals with no significant toxicity. Their safety profile is well established. They are generally well tolerated up to doses that are well beyond doses typically encountered with the administration of medicinal products. Typically they are ubiquitous in the environment or the plant and animal kingdoms.

4.2. EXPOSURE LIMITS

A general set of safety based limits is defined for residues of each particular class of metals, taking into account the route of administration.

Table 1 provides information on acceptable PDEs and concentration limits for residues of the currently included 14 metals following oral, parenteral and/or inhalation exposure. The metals that are currently included in Class 1 are further subdivided into 3 subclasses called class 1A, 1B and 1C. The exposure limits in class 1A (platinoids) and 1C relate to the individual metals, whereas the exposure limits in class 1B (also platinoids) relate to the total amount of the listed metals. For the platinoid metals in class 1B, a conservative approach was adopted because the currently available toxicity data is rather limited. Therefore the indicated limit for Class 1B is the limit for the total amount of these platinoid metals that, based on the used synthesis procedures, is anticipated to be present.

4.3. SETTING CONCENTRATION LIMITS METAL RESIDUES

4.3.1. General

If synthetic processes of pharmaceutical substances are known or suspected to lead to the presence of metal residues due to the use of a specific metal catalyst or metal reagent, a concentration limit and validated test for residues of each

Table 1. – *Class exposure and concentration limits for individual metal catalysts and metal reagents*

Classification	Oral exposure		Parenteral exposure		Inhalation exposure*
	PDE (µg/day)	Concentration (ppm)	PDE (µg/day)	Concentration (ppm)	PDE (ng/day)
Class 1A: **Pt, Pd**	100	10	10	1	Pt: 70*
Class 1B: **Ir, Rh, Ru, Os**	100**	10**	10**	1**	
Class 1C: **Mo, Ni, Cr, V** Metals of significant safety concern	250	25	25	2.5	Ni: 100 Cr (VI): 10
Class 2: **Cu, Mn** Metals with low safety concern	2500	250	250	25	
Class 3: **Fe, Zn** Metals with minimal safety concern	13 000	1300	1300	130	

* See section 4.4.
** Subclass limit: the total amount of listed metals should not exceed the indicated limit.

specific metal should be set. All concentration limits should be realistic in relation to analytical precision, manufacturing capability, and reasonable variation in the manufacturing process. Since the use of metal catalysts or metal reagents during synthesis is restricted to defined chemical reactions, limitation of their residues in pharmaceutical substances itself will normally be sufficient. A limit for a metal residue in the pharmaceutical substance may however be replaced by a limit for that metal residue in the final medicinal product, as described below.

4.3.2. Pharmaceutical products applied via the oral, parenteral or inhalation route of administration

Two options are available when setting a concentration limit for a metal residue.

Option 1: for each metal, the concentration limit in parts per million (ppm) as stated in Table 1 can be used. The concentration limits (in ppm) in Table 1 have been calculated using expression (1) below by assuming a daily dose of 10 grams of the drug product.

$$\frac{PDE\,(\mu g/day)}{daily\ dose\ \ (g/day)} \qquad (1)$$

If all pharmaceutical substances in a drug product meet the option 1 concentration limit for all metals potentially present, then all these substances may be used in any proportion in the drug product as long as the daily dose of the drug product does not exceed 10 g per day. When the daily dose of the drug product is greater than 10 g per day, Option 2 should be applied.

Option 2a: the PDE in terms of µg/day as stated in Table 1 can be used together with the actual daily dose of a pharmaceutical substance in the drug product to calculate the concentration of residual metal allowed in that pharmaceutical substance.

Option 2b: alternatively, it is not considered necessary for each pharmaceutical substance to comply with the limits given in Option 1 or the calculated limits using Option 2a.

The PDE in terms of µg/day as stated in Table 1 can also be used with the known maximum daily dose of the drug product to determine the concentration of a metal residue originating from any of the pharmaceutical substances in the drug product (not the substance). This approach is considered acceptable provided that it has been demonstrated that the metal residue has been reduced to the practical minimum in every substance. This approach implies that the maximum levels of a metal in certain substances may be higher than the Option 1 or Option 2a limit, but that this should then be compensated by lower maximum levels in the other substances.

4.3.3. Pharmaceutical products applied via other routes of administration

The concentration limits should be set in consideration of the route of administration.

Without proper justification, parenteral limits/PDEs should be used for pharmaceutical substances that are administered by other routes of administration, including inhalation. Oral limits/PDEs may be applied if the absorption by other routes of administration is not likely to exceed the absorption following oral administration. For example, for cutaneous administration, oral concentration limits/PDEs are considered acceptable.

Platinum salts have been shown to be allergenic, with hexachloroplatinic acid being clearly the most allergenic (Malo, J-L, 2005). Consequently a specific limit for inhalation exposure for this molecule has been set at 70 ng/day[(1)]. Chromium VI and Nickel, when inhaled, have been associated with carcinogenicity. Therefore specific limits for inhalation exposure have been set for Chromium VI at 10 ng/day and for Nickel at 100 ng/day[(1)].

(1) See Appendix 2 'Monographs on elements' of the guideline, in its integral version.

4.3.4. Pharmaceutical products used for short-term and for life-saving indications

As the PDEs and concentration limits mentioned in this guideline are based on chronic use, higher PDEs and concentration limits may be acceptable in cases of short-term use (30 days or less). For instance, this may be applicable to contrasting agents, antidotes, or products for diagnostic use. This may however only be applied if neither an Option 1 nor an Option 2 limit is feasible. Specific risk-benefit considerations, such as for compounds used for life-saving indications, may also warrant the use of higher limits. Justifications should be made on a case-by-case basis.

4.4. ANALYTICAL PROCEDURES

For the determination of each metal residue an appropriate and validated method should be used. Attention should be paid to the fact that metal residues may be present in a different form than the form of the element in the original catalyst or reagent. Unless otherwise justified, the test should be specific for each element. Where sufficient justification can be derived, a more general analytical method encompassing one or more metal residues with a general concentration limit can be appropriate if it can be shown that the exposure limit for none of the specified metals would be exceeded.

Any harmonized procedures for determining levels of metallic residues as described in the pharmacopoeias should be used, if feasible. Otherwise, manufacturers are free to select the most appropriate validated analytical procedure for a particular application. If only residuals of Class 2 or Class 3 metals are present, a non-specific method may be used. Specifically with respect to platinoid Class 1B, where a group limits applies, it is accepted that due to technical limitations, the lower limit of detection may not be below 0.5 ppm for individual platinoids.

General semi-quantitative metal limit tests based on the precipitation at pH 3.5 of coloured metal sulfides are described in several publications (e.g. Ph. Eur.). Such tests are not suitable to quantitatively determine the actual levels of a specific metal residue in a pharmaceutical substance. If adjusted (e.g. by using standard addition methods) and properly validated (including cross-validation with an element-specific test), a test based on the principle of sulfide precipitation, may be suitable for routine testing in some cases.

4.5. BATCH RESULTS, TESTING FREQUENCY AND DELETING OF A TEST FROM THE SPECIFICATION

If synthetic processes are known or suspected to lead to the presence of metal residues due to the use of a specific metal catalyst or metal reagent, element specific assays should be undertaken to determine the actual amount of these metal residues, particularly during the development of the synthetic process.

If the synthetic or manufacturing processes have shown to result in the removal of a potential metal residue, routine testing of that metal residue may be replaced by non-routine (skip) testing. A metal residue can be considered adequately removed if, in 6 consecutive pilot scale batches or 3 consecutive industrial scale batches less than 30 per cent of the appropriate concentration limit was found. A change from routine to non-routine testing does not mean that the test may also be deleted from the specification.

Only for Class 3 metals, the test may be deleted from the relevant specification if the drug product manufacturer sufficiently demonstrates that the adequate removal of the metal residue from the pharmaceutical substance or the drug product is guaranteed.

4.6. REPORTING LEVELS OF METALLIC RESIDUES

Manufacturers of medicinal products need information about the content of metallic residues in pharmaceutical substances in order to meet the criteria of this guideline. Thus, it is necessary that the manufacturers of pharmaceutical substances provide a clear statement on the identity and quantity of all metal residues present in their compounds to the drug product manufacturers. The following statements are given as acceptable examples of such information.

- Only Class 3 metals are likely to be present. All are below the Option 1 limit for <oral> or <parenteral> exposure. (Here the supplier would define the applicability, either oral or parenteral product.)
- Only Class 2 metals X, Y, ... are likely to be present. All are below the Option 1 limit for <oral> or <parenteral> exposure.
  (Here the supplier would name the Class 2 metals represented by X, Y, ... and define the applicability, oral or parenteral of the product.)
- Class 1 metal Z is likely to be present. The metal is present in a concentration of zzz ppm which is below <the acceptance criterion>.
  (Here the supplier would state the identity of the metal, the actual concentration found and the applied acceptance criterion. If the metal is found below the LOD or LOQ of the applied analytical method, then the LOD and LOQ of this method are given.)

'Likely to be present' refers to the metal used in the final manufacturing step and to metals that are used in earlier manufacturing steps and not removed consistently by the manufacturing process.

5. GLOSSARY

ACGIH: American Conference of Governmental Industrial Hygienists

ADI: Acceptable daily intake

ATSDR: Agency for Toxic Substances and Disease Registry

Body weight of an adult: the weight adjustment assumes an arbitrary adult human body weight for either sex of 50 kg. This relatively low weight provides an additional safety factor against the standard weights of 60 kg or 70 kg that are often used as well

bw: body weight of an adult

Daily dose: maximum daily dose related to the product mass of a pharmaceutical substance or a drug product

ESADDI: estimated safe and adequate daily intake

FSA: Food Standard Agency

GDP: Good Distribution Practice (for medicinal products for human use)

GMP: Good Manufacturing Practice

IPCS: International Program on Chemical Safety

LOEL: Lowest-observed effect level

LOD: Limit of Detection

LOQ: Limit of Quantification

MDD: Maximum daily dose

NOEL: No-observed effect level

PDE: Permitted daily exposure

Pharmaceutical substance: a substance in the drug product (normally an active pharmaceutical ingredient or an excipient)

PMTDI: Provisional maximum tolerable daily intake

ppm: Parts per million

RfD: Reference Dose

TDI: Tolerable daily intake

TTC: Threshold of toxicological concern

UF: Uncertainty factor

US EPA: United States Environmental Protection Agency

WHO: World Health Organization

6. REFERENCES (SCIENTIFIC AND/OR LEGAL)

- Directive 2001/83/EC (as amended by Directive 2004/24/EC)
- Guideline on the Limits of Genotoxic Impurities (CPMP/SWP/5199/02)

- Impurities Testing Guideline: Impurities in New Drug Substances (CPMP/ICH/2737/99, ICHQ3A)
- Maintenance Note for Guidance on Impurities: Residual Solvents (CPMP/ICH/1507/02, ICHQ3C (M))
- Malo, J-L. Occupational rhinitis and asthma due to metal salts. Allergy 60: 138-139, 2005
- Note for Guidance on Impurities in New Drug Products (CPMP/ICH/2738/99, ICHQ3B (R))
- Note for Guidance on Impurities: Residual Solvents (CPMP/ICH/283/95, ICHQ3C)
- Note for Guidance on Validation of Analytical Methods: Definitions and Terminology (CPMP/ICH/381/95, ICHQ2A)
- Note for Guidance on Validation of Analytical Procedures: Methodology (CPMP/ICH/281/95, ICHQ2B)
- Uter *et al.*, Contact Dermatitis, 1995, 32, 135-142
- Validation of Analytical Procedures: Text and Methodology (CHMP/ICH/381/95, ICHQ2(R1))

01/2012:1063

ALLERGEN PRODUCTS

Producta allergenica

This monograph does not apply to: chemicals that are used solely for diagnosis of contact dermatitis; chemically synthesised products; allergens derived by recombinant DNA technology. It does not necessarily apply to allergen products for veterinary use.

DEFINITION

Allergen products are pharmaceutical preparations derived from extracts of naturally occurring source materials containing allergens, which are substances that lead to and/or provoke allergic reactions. The allergenic components are most often of a proteinaceous nature. Allergen products are intended for *in vivo* diagnosis or treatment of allergic diseases attributed to these allergens.

Allergen products are available as finished products, and as finished products used on a named-patient basis. Allergen products are generally presented as parenteral preparations, eye preparations, preparations for inhalation, preparations for oral use, sublingual preparations or preparations for skin tests.

For *in vivo diagnostic use*, allergen products are usually prepared as unmodified extracts in a 50 per cent *V/V* solution of glycerol for skin testing. For intradermal diagnosis or for provocation tests by nasal, ocular or bronchial administration, suitable dilutions of allergen products may be prepared by dilution of aqueous or glycerinated extracts, or by reconstitution of unmodified freeze-dried extracts.

For *specific immunotherapy*, allergen products may be either unmodified extracts or extracts modified chemically and/or by adsorption onto different carriers (for example, aluminium hydroxide, calcium phosphate or tyrosine).

PRODUCTION

SOURCE MATERIALS

Source materials for the preparation of allergen products are products of animal or vegetable origin, mostly pollens, moulds, mites, animal epithelia and outgrowths (such as hair and feathers) and/or dander, hymenoptera venoms, insects and certain foods.

Where allergen products are manufactured using materials of human or animal origin, the requirements of chapter *5.1.7. Viral safety* apply.

The source materials are defined by their origin, nature, method of collection or production and pretreatment. Control methods and acceptance criteria relating to identity and purity are established. The acceptance criteria must ensure the consistency of the allergenic source material from a qualitative and quantitative point of view. The source materials are stored under controlled conditions justified by stability data.

The collection or production, as well as the handling of the source materials are such that uniform composition is ensured as far as possible from batch to batch.

The content of the relevant residual solvents, heavy metals and pesticides is determined on a number of batches according to a justified sampling plan. Residual solvents and pesticides are limited according to the principles defined in general chapter *2.4.24. Identification and control of residual solvents* and *2.8.13. Pesticide residues* respectively.

Pollens. Potential chemical contaminants, such as pesticides, heavy metals and solvents, must be minimised. The content of foreign pollen must be limited to 1 per cent of total mixed pollens and 0.5 per cent of any individual pollen as determined by a microscopic particle count. Detectable mould spores must not exceed 1 per cent. The contamination with particles of plant origin other than pollen must be kept to a minimum. The maximum allowed contamination must be justified.

Moulds. Biologically active contaminants such as mycotoxins in moulds must be minimised and any presence justified. Appropriate measures have to be implemented to avoid contamination by foreign mould strains. Care must be taken to minimise any allergenic constituents of the media used for the cultivation of moulds as source materials. Culture media that contain substances of human or animal origin must be justified and, when required, must be suitably treated to ensure the inactivation or elimination of possible transmissible agents of disease.

The production method is validated to demonstrate that allergen products obtained from moulds and intended for parenteral administration, if tested, would comply with the test for abnormal toxicity for immunosera and vaccines for human use (*2.6.9*).

Mites. Appropriate measures have to be implemented to avoid contamination by foreign mite strains. Care must be taken to minimise any allergenic constituents of the media used for the cultivation of mites as source materials. Culture media that contain substances of human or animal origin must be justified and, when required, must be suitably treated to ensure the inactivation or elimination of possible transmissible agents of disease.

Animal epithelia and outgrowths and/or dander. They are obtained from healthy animals selected to avoid possible transmissible agents of disease.

Hymenoptera venoms. The species of hymenoptera from which the venom is extracted is identified and specified. The methods of insect collection and venom extraction are described and must ensure that the source material is of proper quality.

Food. The scientific name (species, variety, strain etc.) of the animal or vegetable species is indicated and the part used is stated, if applicable. Foods must be of a quality suitable for human consumption. The origin of the food stuff as well as its processing stage is stated.

MANUFACTURING PROCESS

Allergen products are generally obtained by extraction, and may be purified, from the source materials using appropriate methods shown to preserve the allergenic properties of the components. Allergens for which there are not enough patients to determine the total allergenic activity *in vivo* or *in vitro*, the extraction ratio indicating the relative proportions (*m/V*) of allergenic source materials and solvents is a minimum requirement. Allergen products presented as parenteral preparations, eye preparations, preparations for inhalation and preparations for skin testing are manufactured under aseptic conditions.

In the manufacture, packaging, storage and distribution of allergen products intended for administration by other routes, suitable measures are taken to ensure their microbial quality; recommendations on this aspect are provided in chapter *5.1.4. Microbial quality of non-sterile pharmaceutical preparations and substances for pharmaceutical use*.

All allergen preparations are manufactured under conditions designed to minimise exogenous and endogenous enzymatic degradation.

Any purification procedure is designed to minimise the content of any potential irritant low molecular mass components and non-allergenic components.

Allergen products may contain suitable antimicrobial preservatives, the nature and concentration of which have to be justified.

The manufacturing process comprises various stages:

- source material;
- active substance: it is generally a modified or an unmodified allergen extract; where applicable it is stored under conditions ensuring its stability, for example freeze-dried;
- finished product.

All other stages of the manufacturing process are considered as intermediates.

IN-HOUSE REFERENCE PREPARATION

An appropriate representative preparation is selected as the in-house reference preparation (IHRP), characterised and used to verify batch-to-batch consistency. The IHRP is stored in suitably sized aliquots under conditions ensuring its stability, for example freeze-dried.

Characterisation of the in-house reference preparation. *The extent of characterisation of the IHRP depends on the source material, knowledge of the allergenic components and availability of suitable reagents, as well as the intended use. The characterised IHRP is used as the reference in the batch control of active substances and intermediates and, if possible, in the batch control of finished products.*

The IHRP is characterised by the protein content determination and a protein profile using appropriate methods (such as isoelectric focusing, sodium dodecyl sulfate polyacrylamide gel electrophoresis, immunoelectrophoresis, capillary electrophoresis, chromatographic techniques and mass spectrometry).

Allergenic components may be detected by appropriate methods (for example, immunoblotting or crossed radio-immunoelectrophoresis). Characterisation of the allergenic components may include identification of relevant allergens based on serological or other techniques using pooled or individual sera from allergic patients, or allergen-specific polyclonal or monoclonal antibodies.

Determination of the content of relevant allergens is performed wherever possible. The choice of the relevant allergen components subjected to the determination must be justified. Individual allergens are identified and named according to internationally established nomenclature wherever possible.

The biological potency of the first IHRP is determined in patients by *in vivo* techniques such as skin testing, and expressed in units of biological activity except when not enough patients are available. In this case, the potency of the first IHRP is determined by an *in vitro* method. Subsequently, the biological activity of future IHRPs is demonstrated by *in vitro* methods by comparison with the results obtained with the first IHRP. The *in vitro* potency may be measured by a suitable immunoassay (for example, an assay based on the inhibition of the binding capacity of specific immunoglobulin E antibodies).

IDENTIFICATION

The tests for identification are performed as late as possible in the manufacturing process. In the case of products used on a named-patient basis, the control is performed on the active substance and/or at the intermediate stage between the active substance and the finished product.

Identity is confirmed by comparison with the IHRP using protein profiling by appropriate methods (for example, isoelectric focusing, sodium dodecyl sulfate polyacrylamide gel electrophoresis, immunoelectrophoresis, immunoblotting, liquid chromatography or mass spectrometry).

In exceptional cases, if no IHRP is available, a representative batch may be used to confirm identity.

TESTS

The tests are performed as late as possible in the manufacturing process. In the case of products used on a named-patient basis, the control is performed on the active substance and/or at the intermediate stage between the active substance and the finished product.

Various biochemical and immunological tests have been developed in order to characterise allergens qualitatively and quantitatively. In those cases where such methods cannot be applied, particularly for the determination of allergenic activity and allergen and/or protein profile, justification must be provided.

Water (*2.5.12* or *2.5.32*): maximum 5 per cent for freeze-dried products.

In the case of oral lyophilisates, the water content may be higher than 5 per cent, where justified and authorised.

Sterility (*2.6.1*). Allergen products presented as parenteral preparations, eye preparations, preparations for inhalation or preparations for skin testing comply with the test for sterility.

Microbial contamination. For non-sterile allergen products, recommendations are provided in *5.1.4. Microbial quality of non-sterile pharmaceutical preparations and substances for pharmaceutical use.*

Protein content (*2.5.33*): 80 per cent to 120 per cent of the stated content, unless otherwise justified and authorised. If the biological potency can be determined then the test for protein content is performed as a batch-to-batch consistency test and the protein content is within 50 per cent to 150 per cent of the stated content. When the finished product contains proteinaceous excipients, the test for protein content is performed as late as possible during production before addition of the proteinaceous excipient.

Protein profile. The protein profile determined by suitable methods corresponds to that of the IHRP. The presence of relevant allergen components is verified, where possible. The choice of relevant allergen components to be tested for must be justified.

Various additional tests, some with increasing selectivity, depending on the allergen product concerned can be applied, but in any case for allergen products intended for therapeutic use, a validated test measuring the potency (total allergenic activity, determination of individual allergens or any other justified tests) must be applied.

Aluminium (*2.5.13*): 80 per cent to 120 per cent of the stated amount but in any case not more than 1.25 mg per human dose unless otherwise justified and authorised, when aluminium hydroxide or aluminium phosphate is used as adsorbent.

Calcium (*2.5.14*): 80 per cent to 120 per cent of the stated amount when calcium phosphate is used as adsorbent.

Allergen profile. Relevant allergenic components are identified by means of suitable techniques using allergen-specific human or animal antibodies.

Total allergenic activity: 50 per cent to 150 per cent of the stated amount as assayed by inhibition of the binding capacity of specific immunoglobulin E antibodies or a suitable equivalent *in vitro* method.

Individual allergens: 50 per cent to 200 per cent of the stated amount of each relevant allergen component, determined by a suitable method.

STORAGE

Adsorbed allergen products are not to be frozen, unless otherwise justified and authorised.

LABELLING

The label states:

- the name of the allergen product;

- the biological potency and/or the protein content and/or the extraction concentration;
- the route of administration and the intended use;
- the storage conditions;
- where applicable, the name and amount of added antimicrobial preservative;
- where applicable, for freeze-dried preparations:
  - the name, composition and volume of the reconstituting liquid to be added;
  - the period of time within which the preparation is to be used after reconstitution;
- where applicable, that the preparation is sterile;
- where applicable, the name and amount of adsorbent.

01/2008:2098

ESSENTIAL OILS

Aetherolea

The statements in this monograph are intended to be read in conjunction with individual monographs on essential oils in the European Pharmacopoeia. Application of the monograph to other essential oils may be decided by the competent authority.

DEFINITION

Odorous product, usually of complex composition, obtained from a botanically defined plant raw material by steam distillation, dry distillation, or a suitable mechanical process without heating. Essential oils are usually separated from the aqueous phase by a physical process that does not significantly affect their composition.

Essential oils may be subjected to a suitable subsequent treatment. Thus an essential oil may be commercially known as being deterpenated, desesquiterpenated, rectified or 'x'-free.

- A *deterpenated essential oil* is an essential oil from which monoterpene hydrocarbons have been removed, partially or totally.
- A *deterpenated and desesquiterpenated essential oil* is an essential oil from which mono- and sesquiterpene hydrocarbons have been removed, partially or totally.
- A *rectified essential oil* is an essential oil that has been subjected to fractional distillation to remove certain constituents or modify the content.
- An *'x'-free essential oil* is an essential oil that has been subjected to partial or complete removal of one or more constituents.

PRODUCTION

Depending on the monograph, the plant raw material may be fresh, wilted, dried, whole, broken or ground.

Steam distillation. The essential oil is produced by the passage of steam through the plant raw material in a suitable apparatus. The steam may be introduced from an external source or generated by boiling water below the raw material or by boiling water in which the raw material is immersed. The steam and oil vapours are condensed. The water and essential oil are separated by decantation.

Dry distillation. The essential oil is produced by high-temperature heating of stems or barks in a suitable apparatus without the addition of water or steam.

Mechanical process. The essential oil, usually known as 'cold-pressed', is produced by a mechanical process without any heating. It is mainly applied to *Citrus* fruit and involves expression of the oil from the pericarp and subsequent separation by physical means.

In certain cases, a suitable antioxidant may be added to the essential oil.

CHARACTERS

The appearance and the odour of the essential oil is determined.

IDENTIFICATION

Essential oils are identified by their gas chromatographic profile, or failing this, by any other test that may be required (for example, a test by thin-layer chromatography).

TESTS

GENERAL TESTS

The essential oil complies with the prescribed limits for the following tests.

Relative density (*2.2.5*).

Refractive index (*2.2.6*).

Optical rotation (*2.2.7*).

Fatty oils and resinified essential oils (*2.8.7*).

SUPPLEMENTARY TESTS

If necessary, the essential oil complies with the prescribed limits for the following tests.

Freezing point (*2.2.18*).

Acid value (*2.5.1*).

Peroxide value (*2.5.5*).

Foreign esters (*2.8.6*).

Residue on evaporation (*2.8.9*).

Water (*2.8.5*).

Solubility in alcohol (*2.8.10*).

Falsification. If appropriate, a test for one or more falsifications may be carried out by thin-layer chromatography (*2.2.27*), by gas chromatography (*2.2.28*) using a chiral column if necessary, or by any other suitable method.

Chromatographic profile. Gas chromatography (*2.2.28*): use the normalisation procedure.

In addition to the system suitability test given in the specific monograph, it is necessary to check the suitability of the chromatographic system using the following test, which is to be carried out periodically within the framework of performance qualification.

The chromatogram shown in Figure 2098.-1 is given as an example.

Reference solution: *essential oil CRS*. If necessary, the reference solution can be diluted with *heptane R*.

Column:

- *material*: fused silica;
- *size*: *l* = 60 m, Ø = 0.25 mm;
- *stationary phase*: *macrogol 20 000 R* (0.25 µm).

Carrier gas: *helium for chromatography R*.

Flow rate: 1.5 mL/min.

Split ratio: 1:500. The split ratio/injection volume can be adjusted in order to fit the specific equipment used, provided that the column load stays the same.

Temperature:

	Time (min)	Temperature (°C)
Column	0 - 15	70
	15 - 100	70 → 240
	100 - 105	240
Injection port		250
Detector		270

Detection: flame ionisation.

Injection: 1 µL.

General monographs

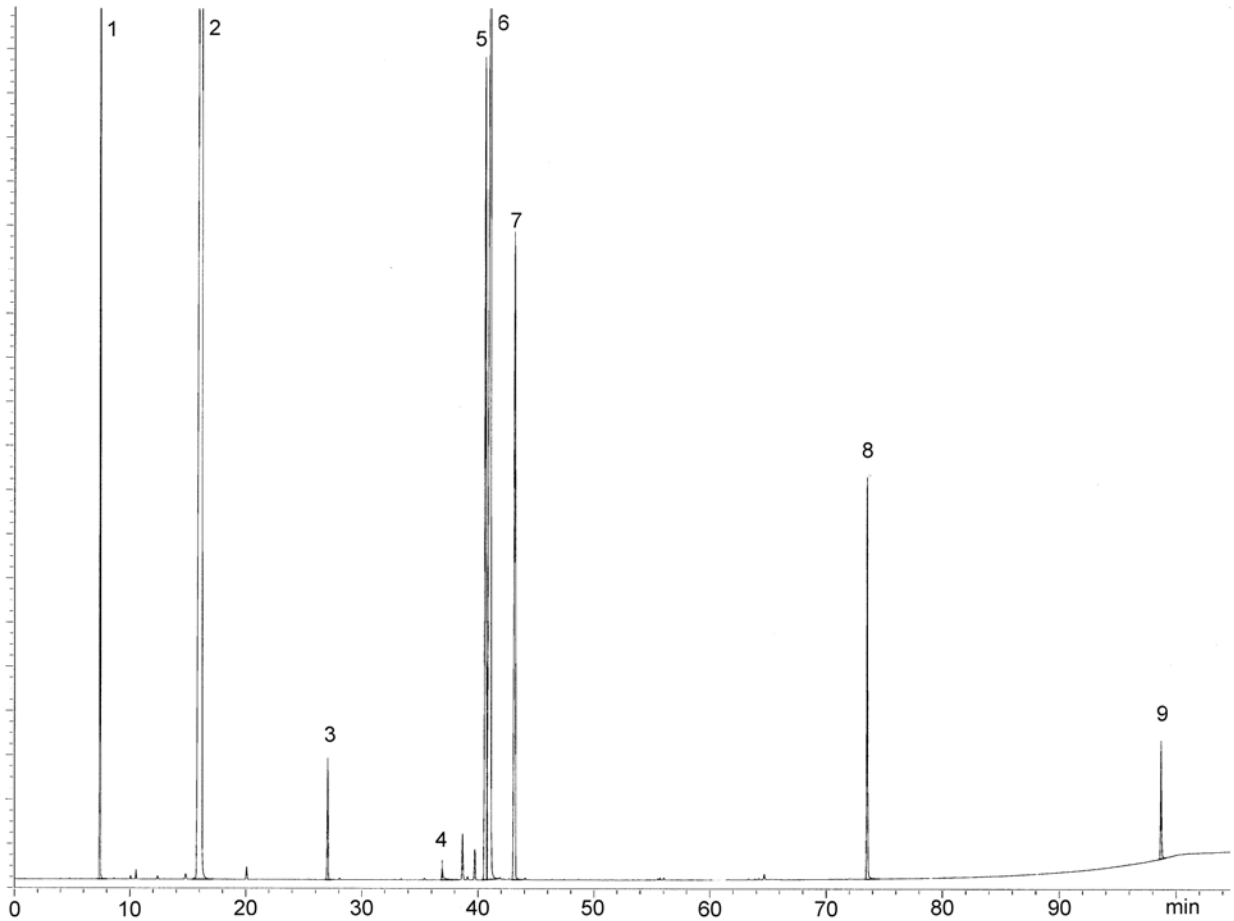

1. α-pinene 3. hexanol 5. linalol 7. β-caryophyllene 9. benzyl salicylate
2. cineole 4. decanal 6. linalyl acetate 8. eugenol

Figure 2098.-1. – *Chromatogram for the test for chromatographic profile of essential oils*

Identification of components: use the chromatogram supplied with *essential oil CRS*.

System suitability: reference solution:

- *resolution*: minimum 1.5 between the peaks due to linalol and linalyl acetate;
- *signal-to-noise ratio*: minimum 100 for the peak due to decanal;
- *limits*: the percentage content of each of the 9 components is within the limits stated on the leaflet provided with *essential oil CRS*.

STORAGE

In a well-filled, airtight container, protected from light.

LABELLING

The label states:

- the scientific name of the plant raw material used;
- where applicable, the type and/or the chemotype of the essential oil;
- where applicable, the method of production;
- where applicable, the name and concentration of any added antioxidant;
- where applicable, additional processing steps that are not specified under Definition.

04/2008:0765

EXTRACTS

Extracta

DEFINITION

Extracts are preparations of liquid (liquid extracts and tinctures), semi-solid (soft extracts and oleoresins) or solid (dry extracts) consistency, obtained from herbal drugs or animal matter, which are usually in a dry state.

Where medicinal products are manufactured using extracts of animal origin, the requirements of chapter *5.1.7. Viral safety* apply.

Different types of extract may be distinguished. Standardised extracts are adjusted within an acceptable tolerance to a given content of constituents with known therapeutic activity; standardisation is achieved by adjustment of the extract with inert material or by blending batches of extracts. Quantified extracts are adjusted to a defined range of constituents; adjustments are made by blending batches of extracts. Other extracts are essentially defined by their production process (state of the herbal drug or animal matter to be extracted, solvent, extraction conditions) and their specifications.

PRODUCTION

Extracts are prepared by suitable methods using ethanol or other suitable solvents. Different batches of the herbal drug or animal matter may be blended prior to extraction. The herbal drug or animal matter to be extracted may undergo a

preliminary treatment, for example, inactivation of enzymes, grinding or defatting. In addition, unwanted matter may be removed after extraction.

Herbal drugs, animal matter and organic solvents used for the preparation of extracts comply with any relevant monograph of the Pharmacopoeia. For soft and dry extracts where the organic solvent is removed by evaporation, recovered or recycled solvent may be used, provided that the recovery procedures are controlled and monitored to ensure that solvents meet appropriate standards before re-use or admixture with other approved materials. Water used for the preparation of extracts is of a suitable quality. Except for the test for bacterial endotoxins, water complying with the section on Purified water in bulk in the monograph on *Purified water (0008)* is suitable. Potable water may be suitable if it complies with a defined specification that allows the consistent production of a suitable extract.

Where applicable, concentration to the intended consistency is carried out using suitable methods, usually under reduced pressure and at a temperature at which deterioration of the constituents is reduced to a minimum. Essential oils that have been separated during processing may be restored to the extracts at an appropriate stage in the manufacturing process. Suitable excipients may be added at various stages of the manufacturing process, for example to improve technological qualities such as homogeneity or consistency. Suitable stabilisers and antimicrobial preservatives may also be added.

Extraction with a given solvent leads to typical proportions of characterised constituents in the extractable matter; during production of standardised and quantified extracts, purification procedures may be applied that increase these proportions with respect to the expected values; such extracts are referred to as 'refined'.

IDENTIFICATION

Extracts are identified using a suitable method.

TESTS

Where applicable, as a result of analysis of the herbal drug or animal matter used for production and in view of the production process, tests for microbiological quality (*5.1.4*), heavy metals, aflatoxins and pesticide residues (*2.8.13*) in the extracts may be necessary.

ASSAY

Wherever possible, extracts are assayed by a suitable method.

LABELLING

The label states:

- the herbal drug or animal matter used;
- whether the extract is liquid, soft or dry, or whether it is a tincture;
- for standardised extracts, the content of constituents with known therapeutic activity;
- for quantified extracts, the content of constituents (markers) used for quantification;
- the ratio of the starting material to the genuine extract (extract without excipients) (DER);
- the solvent or solvents used for extraction;
- where applicable, that a fresh herbal drug or fresh animal matter has been used;
- where applicable, that the extract is 'refined';
- the name and amount of any excipient used including stabilisers and antimicrobial preservatives;
- where applicable, the percentage of dry residue.

Liquid extracts – extracta fluida

DEFINITION

Liquid extracts are liquid preparations of which, in general, 1 part by mass or volume is equivalent to 1 part by mass of the dried herbal drug or animal matter. These preparations are adjusted, if necessary, so that they satisfy the requirements for content of solvent, and, where applicable, for constituents.

PRODUCTION

Liquid extracts are prepared by using ethanol of a suitable concentration or water to extract the herbal drug or animal matter, or by dissolving a soft or dry extract (which has been produced using the same strength of extraction solvent as is used in preparing the liquid extract by direct extraction) of the herbal drug or animal matter in either ethanol of a suitable concentration or water. Liquid extracts may be filtered, if necessary.

A slight sediment may form on standing, which is acceptable as long as the composition of the liquid extract is not changed significantly.

TESTS

Relative density (*2.2.5*). Where applicable, the liquid extract complies with the limits prescribed in the monograph.

Ethanol (*2.9.10*). For alcoholic liquid extracts, carry out the determination of ethanol content. The ethanol content complies with that prescribed.

Methanol and 2-propanol (*2.9.11*): maximum 0.05 per cent *V/V* of methanol and maximum 0.05 per cent *V/V* of 2-propanol for alcoholic liquid extracts, unless otherwise prescribed.

Dry residue (*2.8.16*). Where applicable, the liquid extract complies with the limits prescribed in the monograph, corrected if necessary, taking into account any excipient used.

STORAGE

Protected from light.

LABELLING

The label states in addition to the requirements listed above:

- where applicable, the ethanol content in per cent *V/V* in the final extract.

Tinctures – tincturae

DEFINITION

Tinctures are liquid preparations that are usually obtained using either 1 part of herbal drug or animal matter and 10 parts of extraction solvent, or 1 part of herbal drug or animal matter and 5 parts of extraction solvent.

PRODUCTION

Tinctures are prepared by maceration or percolation (outline methodology is given below) using only ethanol of a suitable concentration for extraction of the herbal drug or animal matter, or by dissolving a soft or dry extract (which has been produced using the same strength of extraction solvent as is used in preparing the tincture by direct extraction) of the herbal drug or animal matter in ethanol of a suitable concentration. Tinctures are filtered, if necessary.

Tinctures are usually clear. A slight sediment may form on standing, which is acceptable as long as the composition of the tincture is not changed significantly.

Production by maceration. Unless otherwise prescribed, reduce the herbal drug or animal matter to be extracted to pieces of suitable size, mix thoroughly with the prescribed extraction solvent and allow to stand in a closed container for an appropriate time. The residue is separated from the extraction solvent and, if necessary, pressed out. In the latter case, the 2 liquids obtained are combined.

Production by percolation. If necessary, reduce the herbal drug or animal matter to be extracted to pieces of suitable size. Mix thoroughly with a portion of the prescribed extraction solvent and allow to stand for an appropriate time. Transfer to a percolator and allow the percolate to flow at room temperature slowly making sure that the herbal drug or animal matter to be extracted is always covered with the remaining extraction solvent. The residue may be pressed out and the expressed liquid combined with the percolate.

TESTS

Relative density (*2.2.5*). Where applicable, the tincture complies with the limits prescribed in the monograph.

Ethanol (*2.9.10*). The ethanol content complies with that prescribed.

Methanol and 2-propanol (*2.9.11*): maximum 0.05 per cent *V/V* of methanol and maximum 0.05 per cent *V/V* of 2-propanol, unless otherwise prescribed.

Dry residue (*2.8.16*). Where applicable, the tincture complies with the limits prescribed in the monograph, corrected if necessary, taking into account any excipient used.

STORAGE

Protected from light.

LABELLING

The label states in addition to the requirements listed above:

- for tinctures other than standardised and quantified tinctures, the ratio of starting material to extraction liquid or of starting material to final tincture;
- the ethanol content in per cent *V/V* in the final tincture.

General monographs

Soft extracts – extracta spissa

DEFINITION

Soft extracts are semi-solid preparations obtained by evaporation or partial evaporation of the solvent used for extraction.

TESTS

Dry residue (*2.8.16*). The soft extract complies with the limits prescribed in the monograph.

Solvents. Residual solvents are controlled as described in chapter *5.4*, unless otherwise prescribed or justified and authorised.

STORAGE

Protected from light.

Oleoresins – oleoresina

DEFINITION

Oleoresins are semi-solid extracts composed of a resin in solution in an essential and/or fatty oil and are obtained by evaporation of the solvent(s) used for their production.

This monograph applies to oleoresins produced by extraction and not to natural oleoresins.

TESTS

Water (*2.2.13*). The oleoresin complies with the limits prescribed in the monograph.

Solvents. Residual solvents are controlled as described in chapter *5.4*, unless otherwise prescribed or justified and authorised.

STORAGE

In an airtight container, protected from light.

Dry extracts – extracta sicca

DEFINITION

Dry extracts are solid preparations obtained by evaporation of the solvent used for their production. Dry extracts have a loss on drying of not greater than 5 per cent *m/m*, unless a loss on drying with a different limit or a test on water is prescribed in the monograph.

TESTS

Water (*2.2.13*). Where applicable, the dry extract complies with the limits prescribed in the monograph.

Loss on drying (*2.8.17*). Where applicable, the dry extract complies with the limits prescribed in the monograph.

Solvents. Residual solvents are controlled as described in chapter *5.4*, unless otherwise prescribed or justified and authorised.

STORAGE

In an airtight container, protected from light.

07/2010:1434

HERBAL DRUG PREPARATIONS

Plantae medicinales praeparatae

DEFINITION

Herbal drug preparations are homogeneous products obtained by subjecting herbal drugs to treatments such as extraction, distillation, expression, fractionation, purification, concentration or fermentation.

Herbal drug preparations include, for example, extracts, essential oils, expressed juices, processed exudates, and herbal drugs that have been subjected to size reduction for specific applications, for example herbal drugs cut for herbal teas or powdered for encapsulation.

Herbal teas comply with the monograph *Herbal teas (1435)*.

NOTE: the term *comminuted* used in European Community legislation on herbal medicinal products describes a herbal drug that has been either cut or powdered.

The term *herbal drug preparation* is synonymous with the term *herbal preparation* used in European Community legislation on herbal medicinal products.

01/2012:1433

HERBAL DRUGS

Plantae medicinales

DEFINITION

Herbal drugs are mainly whole, fragmented, or broken plants, parts of plants, algae, fungi or lichen, in an unprocessed state, usually in dried form but sometimes fresh. Certain exudates that have not been subjected to a specific treatment are also considered to be herbal drugs. Herbal drugs are precisely defined by the botanical scientific name according to the binominal system (genus, species, variety and author).

Whole describes a herbal drug that has not been reduced in size and is presented, dried or undried, as harvested; for example: dog rose, bitter fennel or sweet fennel, Roman chamomile flower.

Fragmented describes a herbal drug that has been reduced in size after harvesting to permit ease of handling, drying and/or packaging; for example: cinchona bark, rhubarb, passion flower.

Broken describes a herbal drug in which the more-fragile parts of the plant have broken during drying, packaging or transportation; for example: belladonna leaf, matricaria flower, hop strobile.

Cut describes a herbal drug that has been reduced in size, other than by powdering, to the extent that the macroscopic description in the monograph of the herbal drug can no longer be applied. When a herbal drug is cut for a specific purpose that results in the cut herbal drug being homogeneous, for example when cut for herbal teas, it is a herbal drug preparation. Certain cut herbal drugs processed in this way may be the subject of an individual monograph.

A herbal drug that complies with its monograph and is subsequently cut for extraction shall comply in its cut form, except for its macroscopic description, with the monograph for that herbal drug, unless otherwise justified.

The term *herbal drug* is synonymous with the term *herbal substance* used in European Community legislation on herbal medicinal products.

PRODUCTION

Herbal drugs are obtained from cultivated or wild plants. Suitable collection, cultivation, harvesting, drying, fragmentation and storage conditions are essential to guarantee the quality of herbal drugs.

Herbal drugs are, as far as possible, free from impurities such as soil, dust, dirt and other contaminants such as fungal, insect and other animal contaminations. They are not rotten.

If a decontaminating treatment has been used, it is necessary to demonstrate that the constituents of the plant are not affected and that no harmful residues remain. The use of ethylene oxide is prohibited for the decontamination of herbal drugs.

IDENTIFICATION

Herbal drugs are identified using their macroscopic and microscopic descriptions and any further tests that may be required (for example, thin-layer chromatography).

TESTS

Foreign matter (*2.8.2*). Carry out a test for foreign matter, unless otherwise prescribed or justified and authorised. The content of foreign matter is not more than 2 per cent *m/m*, unless otherwise prescribed or justified and authorised. An appropriate specific test may apply to herbal drugs liable to be adulterated. It may not be possible to perform the test for foreign matter on a herbal drug that is cut, as described under Definition, for either a specific purpose or for extraction. Under these circumstances the cut material is presumed to comply with the test for foreign matter providing that the herbal drug prior to cutting was compliant with this test.

Loss on drying (*2.2.32*). Carry out a test for loss on drying, unless otherwise prescribed or justified and authorised.

Water (*2.2.13*). A determination of water may be carried out instead of a test for loss on drying for herbal drugs with a high essential-oil content.

Pesticides (*2.8.13*). Herbal drugs comply with the requirements for pesticide residues. The requirements take into account the nature of the plant, where necessary the preparation in which the plant might be used, and where available the knowledge of the complete record of treatment of the batch of the plant.

Heavy metals (*2.4.27*). Unless otherwise stated in an individual monograph or unless otherwise justified and authorised:

- *cadmium*: maximum 1.0 ppm;
- *lead*: maximum 5.0 ppm;
- *mercury*: maximum 0.1 ppm.

Where necessary, limits for other heavy metals may be required.

Where necessary herbal drugs comply with other tests, such as the following, for example.

Total ash (*2.4.16*).

Ash insoluble in hydrochloric acid (*2.8.1*).

Extractable matter.

Swelling index (*2.8.4*).

Bitterness value (*2.8.15*).

Aflatoxin B_1 (*2.8.18*). Where necessary, limits for aflatoxins may be required.

Ochratoxin A (*2.8.22*). Where necessary, a limit for ochratoxin A may be required.

Radioactive contamination. In some specific circumstances, the risk of radioactive contamination is to be considered.

Microbial contamination. Where a herbal drug is used whole, cut or powdered as an ingredient in a medicinal product, the microbial contamination is controlled (*5.1.8. Microbiological quality of herbal medicinal products for oral use and extracts used in their preparation* or *5.1.4. Microbiological quality of non-sterile pharmaceutical preparations and substances for pharmaceutical use.*

ASSAY

Unless otherwise prescribed or justified and authorised, herbal drugs are assayed by an appropriate method.

STORAGE

Protected from light.

General monographs

01/2013:1435

HERBAL TEAS

Plantae ad ptisanam

DEFINITION

Herbal teas consist exclusively of one or more herbal drugs intended for oral aqueous preparations by means of decoction, infusion or maceration. The preparation is prepared immediately before use.

Herbal teas are usually supplied in bulk form or in bags for single use.

The herbal drugs used comply with the appropriate individual European Pharmacopoeia monographs or in their absence with the general monograph *Herbal drugs (1433)*.

IDENTIFICATION

The identity of herbal drugs present in herbal teas is checked by suitable methods such as botanical examinations and/or chromatographic profiles.

TESTS

Recommendations on the microbiological quality of herbal teas (*5.1.8*) take into account the prescribed preparation method (use of boiling or non-boiling water).

The proportion of herbal drugs present in herbal teas is checked by appropriate methods.

Herbal teas in bags comply with the following test:

Uniformity of mass. Determine the individual and the average mass of the contents of 20 randomly chosen units as follows: weigh a single full bag of herbal tea, open it without losing any fragments. Empty it completely using a brush. Weigh the empty bag and calculate the mass of the contents by subtraction. Repeat the operation on the 19 remaining bags and calculate the average mass of the contents of the 20 units. Unless otherwise justified, not more than 2 of the

20 individual masses deviate from the average mass by more than the percentage deviation shown in the table below and none deviates by more than twice that percentage.

Average mass	Percentage deviation
less than 1.5 g	15 per cent
1.5 g to 2.0 g included	10 per cent
more than 2.0 g	7.5 per cent

STORAGE

Protected from light.

01/2013:2620

HERBAL TEAS, INSTANT

Praeparationes celeres ad ptisanam

DEFINITION

Instant herbal teas consist of 1 or more herbal drug preparations (primarily extracts with or without added essential oils), and are intended for the preparation of an oral solution immediately before use.

Instant herbal teas may also contain, in addition to herbal drug preparations, suitable excipients such as maltodextrin and added flavourings.

Instant herbal teas are presented as a powder or granules and are usually supplied in bulk form or in sachets.

The herbal drug preparations used comply with the appropriate individual European Pharmacopoeia monographs or, in the absence of such individual monographs, with the general monograph *Herbal drug preparations (1434)* and with other appropriate general monographs, for example *Extracts (0765)* or *Essential oils (2098)*.

IDENTIFICATION

The identity of herbal drug preparations present in instant herbal teas is checked by suitable methods.

TESTS

General chapter *5.1.8* contains recommendations on the microbiological quality of extract-containing herbal medicinal products such as instant herbal teas.

The proportion of herbal drug preparations present in instant herbal teas is checked by suitable methods.

Instant herbal teas in sachets comply with the following test.

Uniformity of mass. Determine the individual and the average mass of the contents of 20 randomly chosen units as follows: weigh a single full sachet of instant herbal tea, open it without losing any fragments. Empty it completely using a brush. Weigh the empty sachet and calculate the mass of the contents by subtraction. Repeat the operation on the 19 remaining sachets and calculate the average mass of the contents of the 20 units. Unless otherwise justified, not more than 2 of the individual masses deviate from the average mass by more than the percentage deviation shown in the table below and none deviates by more than twice that percentage.

Average mass	Percentage deviation
less than 1.5 g	15 per cent
1.5 g to 2.0 g included	10 per cent
more than 2.0 g	7.5 per cent

STORAGE

Protected from light.

01/2008:0084

IMMUNOSERA FOR HUMAN USE, ANIMAL

Immunosera ex animale ad usum humanum

DEFINITION

Animal immunosera for human use are liquid or freeze-dried preparations containing purified immunoglobulins or immunoglobulin fragments obtained from serum or plasma of immunised animals of different species.

The immunoglobulins or immunoglobulin fragments have the power of specifically neutralising or binding to the antigen used for immunisation. The antigens include microbial or other toxins, human antigens, suspensions of bacterial and viral antigens and venoms of snakes, scorpions and spiders. The preparation is intended for intravenous or intramuscular administration, after dilution where applicable.

PRODUCTION

GENERAL PROVISIONS

The production method shall have been shown to yield consistently immunosera of acceptable safety, potency in man and stability.

Any reagent of biological origin used in the production of immunosera shall be free of contamination with bacteria, fungi and viruses. The general requirements of chapter *5.1.7. Viral safety* apply to the manufacture of animal immunosera for human use, in conjunction with the more specific requirements relating to viral safety in this monograph. The method of preparation includes a step or steps that have been shown to remove or inactivate known agents of infection.

Methods used for production are validated, effective, reproducible and do not impair the biological activity of the product.

The production method is validated to demonstrate that the product, if tested, would comply with the test for abnormal toxicity for immunosera and vaccines for human use (*2.6.9*).

Reference preparation. A batch shown to be suitable in clinical trials, or a batch representative thereof, is used as the reference preparation for the tests for high molecular mass proteins and purity.

ANIMALS

The animals used are of a species approved by the competent authority, are healthy and are exclusively reserved for production of immunoserum. They are tested and shown to be free from a defined list of infectious agents. The introduction of animals into a closed herd follows specified procedures, including definition of quarantine measures. Where appropriate, additional specific agents are considered depending on the geographical localisation of the establishment used for the breeding and production of the animals. The feed originates from a controlled source and no animal proteins are added. The suppliers of animals are certified by the competent authority.

If the animals are treated with antibiotics, a suitable withdrawal period is allowed before collection of blood or plasma. The animals are not treated with penicillin antibiotics. If a live vaccine is administered, a suitable waiting period is imposed between vaccination and collection of serum or plasma for immunoserum production.

IMMUNISATION

The antigens used are identified and characterised, where appropriate; where relevant, they are shown to be free from extraneous infectious agents. They are identified by their names and a batch number; information on the source and preparation are recorded.

The selected animals are isolated for at least 1 week before being immunised according to a defined schedule, with booster injections at suitable intervals. Adjuvants may be used.

Animals are kept under general health surveillance and specific antibody production is controlled at each cycle of immunisation.

Animals are thoroughly examined before collection of blood or plasma. If an animal shows any pathological lesion not related to the immunisation process, it is not used, nor are any other of the animals in the group concerned, unless it is evident that their use will not impair the safety of the product.

COLLECTION OF BLOOD OR PLASMA

Collection of blood is made by venepuncture or plasmapheresis. The puncture area is shaved, cleaned and disinfected. The animals may be anaesthetised under conditions that do not influence the quality of the product. Unless otherwise prescribed, an antimicrobial preservative may be added. The blood or plasma is collected in such a manner as to maintain sterility of the product. The blood or plasma collection is conducted at a site separate from the area where the animals are kept or bred and the area where the immunoserum is purified. If the serum or plasma is stored before further processing, precautions are taken to avoid microbial contamination.

Several single plasma or serum samples may be pooled before purification. The single or pooled samples are tested before purification for the following tests.

Tests for contaminating viruses. If an antimicrobial preservative is added, it must be neutralised before carrying out the tests, or the tests are carried out on a sample taken before addition of the antimicrobial preservative. Each pool is tested for contaminating viruses by suitable *in vitro* tests.

Each pool is tested for viruses by inoculation to cell cultures capable of detecting a wide range of viruses relevant for the particular product.

Potency. Carry out a biological assay as indicated in the monograph and express the result in International Units per millilitre, where applicable. A validated *in vitro* method may also be used.

Protein content. Dilute the product to be examined with a 9 g/L solution of *sodium chloride R* to obtain a solution containing about 15 mg of protein in 2 mL. To 2 mL of this solution in a round-bottomed centrifuge tube add 2 mL of a 75 g/L solution of *sodium molybdate R* and 2 mL of a mixture of 1 volume of *nitrogen-free sulfuric acid R* and 30 volumes of *water R*. Shake, centrifuge for 5 min, decant the supernatant and allow the inverted tube to drain on filter paper. Determine the nitrogen in the residue by the method of sulfuric acid digestion (*2.5.9*) and calculate the content of protein by multiplying by 6.25. The protein content is within approved limits.

PURIFICATION AND VIRAL INACTIVATION

The immunoglobulins are concentrated and purified by fractional precipitation, chromatography, immunoadsorption or by other chemical or physical methods. They may be processed further by enzyme treatment. The methods are selected and validated to avoid contamination at all steps of processing and to avoid formation of protein aggregates that affect the immunobiological characteristics of the product. For products intended to consist of immunoglobulin fragments, the methods are validated to guarantee total fragmentation. The methods of purification used are such that they do not generate additional components that compromise the quality and the safety of the product.

Unless otherwise justified and authorised, validated procedures are applied for removal and/or inactivation of viruses. The procedures are selected to avoid the formation of polymers or aggregates and, unless the product is intended to consist of Fab′ fragments, to minimise the splitting of F(ab′)2 into Fab′ fragments.

After purification and treatment for removal and/or inactivation of viruses, a stabiliser may be added to the intermediate product, which may be stored for a period defined in light of stability data.

Only an intermediate product that complies with the following requirements may be used in the preparation of the final bulk.

Purity. Examine by non-reducing polyacrylamide gel electrophoresis (*2.2.31*), by comparison with the reference preparation. The bands are compared in intensity and no additional bands are found.

FINAL BULK

The final bulk is prepared from a single intermediate product or from a pool of intermediate products obtained from animals of the same species. Intermediate products with different specificities may be pooled.

An antimicrobial preservative and a stabiliser may be added. If an antimicrobial preservative has been added to the blood or plasma, the same substance is used as the antimicrobial preservative in the final bulk.

Only a final bulk that complies with the following requirements may be used in the preparation of the final lot.

Antimicrobial preservative. Where applicable, determine the amount of antimicrobial preservative by a suitable physico-chemical method. It contains not less than 85 per cent and not more than 115 per cent of the amount stated on the label.

Sterility (*2.6.1*). It complies with the test for sterility.

FINAL LOT

The final bulk of immunoserum is distributed aseptically into sterile, tamper-proof containers. The containers are closed so as to prevent contamination.

Only a final lot that complies with the requirements prescribed below under Identification, Tests and Assay may be released for use. Provided that the tests for osmolality, protein content, molecular-size distribution, antimicrobial preservative, stabiliser, purity, foreign proteins and albumin and the assay have been carried out with satisfactory results on the final bulk, they may be omitted on the final lot.

Reconstitute the preparation to be examined as stated on the label immediately before carrying out the identification, tests (except those for solubility and water) and assay.

IDENTIFICATION

The identity is established by immunological tests and, where necessary, by determination of biological activity. The assay may also serve for identification.

CHARACTERS

Immunosera are clear to opalescent and colourless to very faintly yellow liquids. They are free from turbidity. Freeze-dried products are white or slightly yellow powders or solid friable masses. After reconstitution they show the same characteristics as liquid preparations.

TESTS

Solubility. To a container of the preparation to be examined, add the volume of the liquid for reconstitution stated on the label. The preparation dissolves completely within the time stated on the label.

Extractable volume (*2.9.17*). It complies with the requirement for extractable volume.

pH (*2.2.3*). The pH is within the limits approved for the particular product.

Osmolality (*2.2.35*): minimum 240 mosmol/kg after dilution, where applicable.

Protein content: 90 per cent to 110 per cent of the amount stated on the label, and, unless otherwise justified and authorised, not more than 100 g/L.

Dilute the preparation to be examined with a 9 g/L solution of *sodium chloride R* to obtain a solution containing about 15 mg of protein in 2 mL. To 2 mL of this solution in a round-bottomed centrifuge tube add 2 mL of a 75 g/L solution of *sodium molybdate R* and 2 mL of a mixture of 1 volume of *nitrogen-free sulfuric acid R* and 30 volumes of *water R*. Shake, centrifuge for 5 min, decant the supernatant and allow the inverted tube to drain on filter paper. Determine the nitrogen in the residue by the method of sulfuric acid digestion (*2.5.9*) and calculate the content of protein by multiplying by 6.25.

Molecular-size distribution. Examine by liquid chromatography (*2.2.29* or *2.2.30*). It complies with the specification approved for the particular product.

Antimicrobial preservative. Where applicable, determine the amount of antimicrobial preservative by a suitable physicochemical method. The amount is not less than the minimum amount shown to be effective and is not greater than 115 per cent of that stated on the label.

Phenol (*2.5.15*): maximum 2.5 g/L for preparations containing phenol.

Stabiliser. Determine the amount of stabiliser by a suitable physico-chemical method. The preparation contains not less than 80 per cent and not more than 120 per cent of the quantity stated on the label.

Purity. Examine by non-reducing polyacrylamide gel electrophoresis (*2.2.31*), by comparison with the reference preparation. No additional bands are found for the preparation to be examined.

Foreign proteins. When examined by precipitation tests with specific antisera, only protein from the declared animal species is shown to be present, unless otherwise prescribed, for example where material of human origin is used during production.

Albumin. Unless otherwise prescribed in the monograph, when examined electrophoretically, the content of albumin is not greater than the limit approved for the particular product and, in any case, is not greater than 3 per cent.

Water (*2.5.12*): maximum 3 per cent.

Sterility (*2.6.1*). It complies with the test for sterility.

Pyrogens (*2.6.8*). Unless otherwise justified and authorised, it complies with the test for pyrogens. Unless otherwise prescribed, inject 1 mL per kilogram of the rabbit's body mass.

ASSAY

Carry out a biological assay as indicated in the monograph and express the result in International Units per millilitre, where appropriate. A validated *in vitro* method may also be used.

STORAGE

Protected from light, at the temperature stated on the label. Do not allow liquid preparations to freeze.

Expiry date. The expiry date is calculated from the beginning of the assay.

LABELLING

The label states:

- the number of International Units per millilitre, where applicable;
- the amount of protein per container;
- for freeze-dried preparations:
  - the name and volume of the reconstituting liquid to be added;
  - that the immunoserum is to be used immediately after reconstitution;
  - the time required for complete dissolution;
- the route of administration;
- the storage conditions;
- the expiry date, except for containers of less than 1 mL which are individually packed; the expiry date may be omitted from the label on the container, provided it is shown on the package and the label on the package states that the container must be kept in the package until required for use;
- the animal species of origin;
- the name and amount of any antimicrobial preservative, any stabiliser and any other excipient.

01/2008:0030

IMMUNOSERA FOR VETERINARY USE

Immunosera ad usum veterinarium

DEFINITION

Immunosera for veterinary use are preparations containing immunoglobulins, purified immunoglobulins or immunoglobulin fragments obtained from serum or plasma of immunised animals. They may be preparations of crude polyclonal antisera or purified preparations.

The immunoglobulins or immunoglobulin fragments have the power of specifically neutralising the antigen used for immunisation. The antigens include microbial or other toxins, bacterial and viral antigens, venoms of snakes and hormones. The preparation is intended for parenteral administration to provide passive immunity.

PRODUCTION

GENERAL PROVISIONS

Immunosera are obtained from the serum or plasma of healthy animals immunised by administration of one or more suitable antigens.

The production method shall have been shown to yield consistently batches of immunosera of acceptable safety (*5.2.6*) and efficacy (*5.2.7*).

DONOR ANIMALS

The animals used are exclusively reserved for production of immunoserum. They are maintained under conditions protecting them from the introduction of disease, as far as possible. The donor animals, and any animals in contact with them, are tested and shown to be free from a defined list of infectious agents and re-tested at suitable intervals. The list of agents for testing includes not only those agents that are relevant to the donor animal, but also those that are relevant to the recipient target species for the product. Where the donor animals have not been demonstrated to be free from a relevant pathogen, a justification must be provided and a validated inactivation or purification procedure must be included in the manufacturing procedure. The feed originates from a controlled source. Where the donor animals are chickens, use chickens from a flock free from specified pathogens (*5.2.2*). Where applicable for the species used, measures are taken to avoid contamination with agents of transmissible spongiform encephalopathies.

As far as possible, animals being introduced into the herd are from a known source and have a known breeding and rearing history. The introduction of animals into the herd follows specified procedures, including defined quarantine measures. During the quarantine period the animals are observed and tested to establish that they are free from the list of agents relevant for the donor animals. It may be necessary to test the animals in quarantine for freedom from additional agents, depending on their known breeding and rearing history or any lack of information on their source.

Any routine or therapeutic medicinal treatment administered to the animals in quarantine or thereafter must be recorded.

IMMUNISING ANTIGEN

The principles described in the Production section of *Vaccines for veterinary use (0062)* are applied to the production of the immunogen. The antigen used is identified and characterised. The starting materials used for antigen preparation must be controlled to minimise the risk of contamination with extraneous agents. The antigen may be blended with a suitable adjuvant. The immunogen is produced on a batch basis. The batches must be prepared and tested in such a manner that assures that each batch will be equally safe and free from extraneous agents and will produce a satisfactory, consistent immune response.

IMMUNISATION

The donor animals are immunised according to a defined schedule. For each animal, the details of the dose of immunising antigen, route of administration and dates of administration are recorded. Animals are kept under general health surveillance and the development of specific antibodies are monitored at appropriate stages of the immunisation process.

COLLECTION OF BLOOD OR PLASMA

Animals are thoroughly examined before each collection. Only healthy animals may be used as a donor animal. Collection of blood is made by venepuncture or plasmapheresis. The puncture area is shaved, cleaned and disinfected. The method of collection and the volume to be collected on each occasion are specified. The blood or plasma is collected in such a manner as to maintain sterility of the product. If the serum or plasma is stored before further processing, precautions are taken to avoid microbial contamination.

The blood or plasma collection is conducted at a site separate from the area where the animals are kept or bred and the area where the immunoserum is further processed.

Clear criteria are established for determining the time between immunisation and first collection of blood or plasma as well as the time between subsequent collections and the length of time over which collections are made. The criteria applied must take into account the effect of the collections on the health and welfare of the animal as well as the effect on the consistency of production of batches of the finished product, over time.

The rate of clearance of any residues that may arise from the immunising antigen or medication given needs to be taken into account. In the case of the risk of residues from chemical substances, consideration could be given to the inclusion of a withdrawal period for the finished product. If the immunising agent consists of a live organism, the time between immunisation and collection may need to take into account the time required for the donor to eliminate the immunogen, particularly if any residual live organisms might be harmful to the recipient.

PREPARATION OF THE FINISHED PRODUCT

Several single plasma or serum collections from one or more animals may be pooled to form a bulk for preparation of a batch. The number of collections that may be used to produce a bulk and the size of the bulk are defined. Where pooling is not undertaken, the production procedure must be very carefully controlled to ensure that the consistency of the product is satisfactory.

The active substance is subjected to a purification and/or inactivation procedure unless omission of such a step has been justifed and agreed with the competent authority. The procedure applied must have been validated and be shown not to adversely impair the biological activity of the product. The validation studies must address the ability of the procedure to inactivate or remove any potential contaminants such as pathogens that could be transmitted from the donor to the recipient target species and infectious agents such as those that cause ubiquitous infections in the donor animals and cannot be readily eliminated from these donor animals.

For purified immunosera, the globulins containing the immune substances may be obtained from the crude immunoserum by enzyme treatment and fractional precipitation or by other suitable chemical or physical methods

Antimicrobial preservatives. Antimicrobial preservatives are used to prevent spoilage or adverse effects caused by microbial contamination occurring during use of a product. Antimicrobial preservatives are not included in freeze-dried products but, if justified, taking into account the maximum recommended period of use after reconstitution, they may be included in the diluent for multidose freeze-dried products. For single-dose liquid preparations, inclusion of antimicrobial preservatives is not normally acceptable, but may be acceptable, for example where the same product is filled in single-dose and multidose containers and is for use in non-food producing species. For multidose liquid preparations, the need for effective antimicrobial preservation is evaluated taking into account likely contamination during use and the maximum recommended period of use after broaching of the container.

During development studies the effectiveness of the antimicrobial preservative throughout the period of validity shall be demonstrated to the satisfaction of the competent authority.

The efficacy of the antimicrobial preservative is evaluated as described in chapter *5.1.3*; for a multidose preparation, additional samples are taken, to monitor the effect of the antimicrobial preservative over the proposed in-use shelf-life. If neither the A criteria nor the B criteria can be met, then in justified cases the following criteria are applied to antisera for veterinary use: bacteria, no increase at 24 h and 7 days, 3 $\log_{10}$ reduction at 14 days, no increase at 28 days; fungi, no increase at 14 days and 28 days.

Addition of antibiotics as antimicrobial preservative is not acceptable.

Unless otherwise prescribed in the monograph, the final bulk is distributed aseptically into sterile, tamper-proof containers which are then closed so as to exclude contamination.

The preparation may be freeze-dried.

In-process tests. Suitable tests are carried out in-process, such as on samples from collections before pooling to form a bulk.

BATCH TESTS

The tests that are necessary to demonstrate the suitability of a batch of a product will vary and are influenced by a number of factors, including the detailed method of production. The tests to be conducted by the manufacturer on a particular product are agreed with the competent authority. If a product is treated by a validated procedure for inactivation of extraneous agents, the test for extraneous agents can be omitted on that product with the agreement of the competent authority. If a product is treated by a validated procedure for inactivation of mycoplasmas, the test for mycoplasmas can be omitted on that product with the agreement of the competent authority.

Only a batch that complies with each of the relevant requirements given below under Identification, Tests and Potency and/or in the relevant specific monograph may be released for use. With the agreement of the competent authority, certain tests may be omitted where in-process tests give an equal or better guarantee that the batch would comply or where alternative tests validated with respect to the Pharmacopoeia method have been carried out.

Certain tests, e.g. for antimicrobial preservatives, for foreign proteins and for albumin, may be carried out by the manufacturer on the final bulk rather than on the batch, batches or sub-batches of finished product prepared from it. In some circumstances, e.g. when collections are made into plasmapheresis bags and each one is, essentially, a batch, pools of samples may be tested, with the agreement of the competent authority.

It is recognised that, in accordance with General Notices (section 1.1. General statements), for an established antiserum the routine application of the safety test will be waived by the competent authority in the interests of animal welfare when a sufficient number of consecutive batches have been produced and found to comply with this test, thus demonstrating consistency of the manufacturing process. Significant changes to the manufacturing process may require resumption of routine testing to re-establish consistency. The number of consecutive batches to be tested depends on a number of factors such as the type of antiserum, the frequency of production of batches, and experience with the immunoserum during developmental safety testing and during application of the batch safety test. Without prejudice to the decision of the competent authority in the light of information available for a given antiserum, testing of 10 consecutive batches is likely to be sufficient for the majority of products. For products with an inherent safety risk, it may be necessary to continue to conduct the safety test on each batch.

Animal tests. In accordance with the provisions of the European Convention for the Protection of Vertebrate Animals Used for Experimental and Other Scientific Purposes, tests must be carried out in such a way as to use the minimum number of animals and to cause the least pain, suffering, distress or lasting harm. The criteria for judging tests in monographs must be applied in the light of this. For example, if it is indicated that an animal is considered to show positive, infected etc. when typical clinical signs occur then as soon as sufficient indication of a positive result is obtained the animal in question shall be either euthanised or given suitable treatment to prevent unnecessary suffering. In accordance with the General Notices, alternative test methods may be used to demonstrate compliance with the monograph and the use of such tests is particularly encouraged when this leads to replacement or reduction of animal use or reduction of suffering.

pH (*2.2.3*). The pH of crude and purified immunosera is shown to be within the limits set for the products.

Formaldehyde. If formaldehyde is used for production of immunoserum, a test for free formaldehyde is carried out as prescribed under Tests.

Other inactivating agents. When other inactivation methods are used, appropriate tests are carried out to demonstrate that the inactivating agent has been removed or reduced to an acceptable residual level.

Batch potency test. If a specific monograph exists for the product, the test described under Potency is not necessarily carried out for routine testing of batches of antiserum. The type of batch potency test to be carried out will depend on the claims being made for the product. Wherever possible, *in vitro* tests must be used. The type of test required may include measurement of antibodies against specific infectious organisms, determination of the type of antibody (e.g. neutralising or opsonising). All tests must be validated. The criteria for acceptance must be set with reference to a batch that has been shown to comply with the requirements specified under Potency if a specific monograph exists for the product, and which has been shown to have satisfactory efficacy, in accordance with the claims being made for the product.

Total immunoglobulins. A test for the quantities of total immunoglobulins and/or total gammaglobulins and/or specific immunoglobulin classes is carried out. The results obtained must be within the limits set for the product and agreed with the competent authority. The batch contains not more than the level shown to be safe in the safety studies and, unless the batch potency test specifically covers all appropriate immunoglobulins, the level in the batch is not less than that in the batch or batches shown to be effective in the efficacy studies.

Total protein. For products where claims are being made which relate to the protein content, as well as demonstrating that the batch contains not more than the stated upper limit, the batch shall be shown to contain not less than that in the batch or batches shown to be effective in the efficacy studies.

Extraneous agents. In addition to the test described under Tests, specific tests may be required depending on the nature of the preparation, its risk of contamination and the use of the product. In particular, specific tests for important potential pathogens may be required when the donor and recipient species are the same and when these agents would not be detected reliably by the general screening test described under Tests.

Water. Where applicable, the freeze-drying process is checked by a determination of water and shown to be within the limits set for the product.

IDENTIFICATION

The identity of the product is established by immunological tests and, where necessary, by determination of biological activity. The potency test may also serve for identification.

TESTS

The following requirements refer to liquid immunosera and reconstituted freeze-dried immunosera.

Foreign proteins. When examined by precipitation tests with specific antisera against plasma proteins of a suitable range of species, only protein from the declared animal species is shown to be present.

Albumin. Purified immunosera comply with a test for albumin. Unless otherwise prescribed in the monograph, when examined electrophoretically, purified immunosera show not more than a trace of albumin, and the content of albumin is in any case not greater than 30 g/L of the reconstituted preparation, where applicable.

Total protein. Dilute the preparation to be examined with a 9 g/L solution of *sodium chloride R* to obtain a solution containing about 15 mg of protein in 2 mL. To 2 mL of this solution in a round-bottomed centrifuge tube add 2 mL of a 75 g/L solution of *sodium molybdate R* and 2 mL of a mixture of 1 volume of *nitrogen-free sulfuric acid R* and 30 volumes of *water R*. Shake, centrifuge for 5 min, discard the supernatant and allow the inverted tube to drain on filter paper. Determine the nitrogen in the residue by the method of sulfuric acid digestion (*2.5.9*) and calculate the content of protein by multiplying by 6.25. The results obtained are not greater than the upper limit stated on the label.

Antimicrobial preservative. Determine the amount of antimicrobial preservative by a suitable physicochemical method. The amount is not less than the minimum amount shown to be effective and is not greater than 115 per cent of that stated on the label.

Formaldehyde (*2.4.18*). Where formaldehyde has been used in the preparation, the concentration of free formaldehyde is not greater than 0.5 g/L, unless a higher amount has been shown to be safe.

Sterility (*2.6.1*). Immunosera for veterinary use comply with the test for sterility. When the volume of liquid in a container is greater than 100 mL, the method of membrane filtration is used wherever possible. If this method is used, incubate the media for not less than 14 days. Where the method of membrane filtration cannot be employed, the method of direct inoculation may be used. Where the volume of liquid in each container is at least 20 mL, the minimum volume to be used for each culture medium is 10 per cent of the contents of the container or 5 mL, whichever is the least. The appropriate number of items to be tested (*2.6.1*) is 1 per cent of the batch with a minimum of 4 and a maximum of 10.

Mycoplasmas (*2.6.7*). Immunosera for veterinary use comply with the test for mycoplasmas.

Safety. A test is conducted in one of the species for which the product is recommended. Unless an overdose is specifically contraindicated on the label, twice the maximum recommended dose for the species used is administered by a recommended route. If there is a warning against administration of an overdose, a single dose is administered. For products to be used in mammals, use 2 animals of the minimum age for which the product is recommended. For avian products, use not fewer than 10 birds of the minimum age recommended. The birds are observed for 21 days. The other species are observed for 14 days. No abnormal local or systemic reaction occurs.

Extraneous agents. A test for extraneous agents is conducted by inoculation of cell cultures sensitive to pathogens of the species of the donor animal and into cells sensitive to pathogens of each of the recipient target species stated on the label (*2.6.25*). Observe the cells for 14 days. During this time, carry out at least one passage. The cells are checked daily for cytopathic effect and are checked at the end of 14 days for the presence of a haemadsorbing agent. The batch complies with the test if there is no evidence of the presence of an extraneous agent.

For immunosera of avian origin, if a test in cell culture is insufficient to detect potential extraneous agents, a test is conducted by inoculation of embryonated eggs from flocks free from specified pathogens (*5.2.2*) or by some other suitable method (polymerase chain reaction (PCR) for example).

POTENCY

Carry out a suitable test for potency.

Where a specific monograph exists, carry out the biological assay prescribed in the monograph and express the result in International Units per millilitre when such exist.

STORAGE

Protected from light, at a temperature of 5 ± 3 °C. Liquid immunosera must not be allowed to freeze.

LABELLING

The label states:

- that the preparation is for veterinary use;
- whether or not the preparation is purified;
- the minimum number of International Units per millilitre, where such exist;
- the volume of the preparation in the container;
- the indications for the product;
- the instructions for use including the interval between any repeat administrations and the maximum number of administrations that is recommended;
- the recipient target species for the immunoserum;
- the dose recommended for different species;
- the route(s) of administration;
- the name of the species of the donor animal;
- the maximum quantity of total protein;
- the name and amount of any antimicrobial preservative or any other excipient;
- any contra-indications to the use of the product including any required warning on the dangers of administration of an overdose;
- for freeze-dried immunosera:
  - the name or composition and the volume of the reconstituting liquid to be added;
  - the period within which the immunoserum is to be used after reconstitution.

01/2012:2031

MONOCLONAL ANTIBODIES FOR HUMAN USE

Anticorpora monoclonalia ad usum humanum

DEFINITION

Monoclonal antibodies for human use are preparations of an immunoglobulin or a fragment of an immunoglobulin, for example, F(ab′)2, with defined specificity, produced by a single clone of cells. They may be conjugated to other substances, including for radiolabelling.

They can be obtained from immortalised B lymphocytes that are cloned and expanded as continuous cell lines or from rDNA-engineered cell lines.

Examined under suitable conditions of visibility, they are practically free from particles.

Currently available rDNA-engineered antibodies include the following antibodies.

Chimeric monoclonal antibodies: the variable heavy- and light-chain domains of a human antibody are replaced by those of a non-human species that possess the desired antigen specificity.

Humanised monoclonal antibodies: the 3 short hypervariable sequences (the complementarity-determining regions) of non-human variable domains for each chain are engineered into the variable domain framework of a human antibody; other sequence changes may be made to improve antigen binding.

Recombinant human monoclonal antibodies: the variable heavy- and light-chain domains of a human antibody are combined with the constant region of a human antibody.

Monoclonal antibodies obtained from cell lines modified by recombinant DNA technology also comply with the requirements of the monograph *Products of recombinant DNA technology (0784)*.

This monograph applies to monoclonal antibodies, including conjugates, for therapeutic and prophylactic use and for use as *in vivo* diagnostics. It does not apply to monoclonal antibodies used as reagents in the manufacture of medicinal products. Nor does it apply to monoclonal antibodies produced in ascites, for which requirements are decided by the competent authority.

PRODUCTION

GENERAL PROVISIONS

Production is based on a seed-lot system using a master cell bank and, if applicable, a working cell bank derived from the cloned cells. The production method is validated during development studies in order to prevent transmission of infectious agents by the final product. All biological materials and cells used in the production are characterised and are in compliance with chapter *5.2.8. Minimising the risk of transmitting animal spongiform encephalopathy agents via human and veterinary medicinal products*. Where monoclonal antibodies for human use are manufactured using materials of human or animal origin, the requirements of chapter *5.1.7. Viral safety* also apply. Where an immunogen is used, it is characterised and the method of immunisation is documented.

Process validation. During development studies, the production method is validated for the following aspects:

- consistency of the production process including cell-culture/fermentation, purification and, where applicable, fragmentation method;
- removal or inactivation of infectious agents;

General monographs

- adequate removal of product- and process-related impurities (for example, host-cell protein and DNA, protein A, antibiotics, cell-culture components);
- specificity and biological activity of the monoclonal antibody;
- absence of non-endotoxin pyrogens, where applicable;
- reusability of purification components (for example, column material), limits or acceptance criteria being set as a function of the validation;
- methods used for conjugation, where applicable.

Product characterisation. The product is characterised to obtain adequate information including: structural integrity, isotype, amino-acid sequence, secondary structure, carbohydrate moiety, disulfide bridges, conformation, specificity, affinity, biological activity and heterogeneity (characterisation of isoforms).

A battery of suitable analytical techniques is used including chemical, physical, immunochemical and biological tests (for example, peptide mapping, *N*- and *C*-terminal amino-acid sequencing, mass spectrometry, chromatographic, electrophoretic and spectroscopic techniques). Additional tests are performed to obtain information on cross-reactivity with human tissues.

For those products that are modified by fragmentation or conjugation, the influence of the methods used on the antibody is characterised.

Process intermediates. Where process intermediates are stored, an expiry date or a storage period justified by stability data is established for each.

Biological assay. The biological assay is chosen in terms of its correlation with the intended mode of action of the monoclonal antibody.

Reference preparation. A batch shown to be stable and shown to be suitable in clinical trials, or a batch representative thereof, is used as a reference preparation for the identification, tests and assay. The reference preparation is appropriately characterised as defined under Product characterisation, except that it is not necessary to examine cross-reactivity for each batch of reference preparation.

Definition of a batch. Definition of a batch is required throughout the process.

SOURCE CELLS

Source cells include fusion partners, lymphocytes, myeloma cells, feeder cells and host cells for the expression of the recombinant monoclonal antibody.

The origin and characteristics of the parental cell are documented, including information on the health of the donors, and on the fusion partner used (for example, myeloma cell line, human lymphoblastoid B-cell line).

Wherever possible, source cells undergo suitable screening for extraneous agents and endogenous agents. The choice of viruses for the tests is dependent on the species and tissue of origin.

CELL LINE PRODUCING THE MONOCLONAL ANTIBODY

The suitability of the cell line producing the monoclonal antibody is demonstrated by:

- documentation on the history of the cell line including description of the cell fusion, immortalisation or transfection and cloning procedure;
- characterisation of the cell line (for example, phenotype, isoenzyme analysis, immunochemical markers and cytogenetic markers);
- characterisation of relevant features of the antibody;
- consistency of critical quality attributes for the antibody up to or beyond the population doubling level or generation number used for routine production;
- for recombinant DNA products, consistency of the coding sequence of the expression construct in cells cultivated to the limit of *in vitro* cell age for production use or beyond, by either nucleic acid testing or product analysis.

CELL BANKS

The master cell bank is a homogeneous suspension of the cell line producing the monoclonal antibody, distributed in equal volumes in a single operation into individual containers for storage.

A working cell bank is a homogeneous suspension of the cell material derived from the master cell bank at a finite passage level, distributed in equal volumes in a single operation into individual containers for storage.

Post-production cells are cells cultured up to or beyond the population doubling level or generation number used for routine production.

The following tests are performed on the master cell bank: viability, identity, absence of bacterial, fungal and mycoplasmal contamination, characterisation of the monoclonal antibody produced. Adventitious viral contamination is tested with a suitable range of *in vivo* and *in vitro* tests. Retrovirus and other endogenous viral contamination is tested using a suitable range of *in vitro* tests.

The following tests are performed on the working cell bank: viability, identity, absence of bacterial, fungal and mycoplasmal contamination. Adventitious viral contamination is tested with a suitable range of *in vivo* and *in vitro* tests. For the first working cell bank, these tests are performed on post-production cells, generated from that working cell bank; for working cell banks subsequent to the first working cell bank, a single *in vitro* and *in vivo* test can be done either directly on the working cell bank or on post-production cells.

For the master cell bank and working cell bank, tests for specific viruses are carried out when potentially contaminated biological material has been used during preparation of the cell banks, taking into account the species of origin of this material. This may not be necessary when this material is inactivated using validated procedures.

The following tests are performed on the post-production cells: absence of bacterial, fungal and mycoplasmal contamination. Adventitious viral contamination is tested with a suitable range of *in vivo* and *in vitro* tests. Retrovirus and other endogenous viral contamination is tested using a suitable range of *in vitro* tests.

CULTURE AND HARVEST

Production at finite passage level (single harvest). Cells are cultivated up to a defined maximum number of passages or population doublings, or up to a fixed harvest time (in accordance with the stability of the cell line). Product is harvested in a single operation.

Continuous-culture production (multiple harvest). Cells are continuously cultivated for a defined period (in accordance with the stability of the system and production consistency). Monitoring is necessary throughout the life of the culture; the required frequency and type of monitoring will depend on the nature of the production system.

Each harvest is tested for antibody content, bioburden, endotoxin and mycoplasmas. General or specific tests for adventitious viruses are carried out at a suitable stage depending on the nature of the manufacturing process and the materials used. For processes using production at finite passage level (single harvest), at least 3 harvests are tested for adventitious viruses using a suitable range of *in vitro* methods.

The acceptance criteria for harvests for further processing are clearly defined and linked to the schedule of monitoring applied. If any adventitious viruses are detected, the process is carefully investigated to determine the cause of the contamination and the harvest is not further processed.

Harvests in which an endogenous virus has been detected are not used for purification unless an appropriate action plan has been defined to prevent transmission of infectious agents.

PURIFICATION

Harvests or intermediate pools may be pooled before further processing. The purification process includes steps that remove and/or inactivate non-enveloped and enveloped viruses. A validated purification process, for which removal and/or inactivation of infectious agents and removal of product- and process-related impurities has been demonstrated, is used. Defined steps of the process lead to a purified monoclonal antibody (active substance) of consistent quality and biological activity.

ACTIVE SUBSTANCE

The test programme for the active substance depends on the validation of the process, on demonstration of consistency and on the expected level of product- and process-related impurities. The active substance is tested for appearance, identity, bioburden and bacterial endotoxins, product-related substances, product- and process-related impurities including tests for host-cell-derived proteins and host-cell- and vector-derived DNA, as well as structural integrity, protein content and biological activity by suitable analytical methods, comparing with the reference preparation where necessary. When the active substance is a conjugated or transformed antibody, appropriate tests must be performed before and after the antibody conjugation/modification.

If storage of intermediates is intended, adequate stability of these preparations and its impact on quality or shelf-life of the finished product are evaluated.

FINAL BULK

One or more batches of active substance may be combined to produce the final bulk. Suitable stabilisers and other excipients may be added during preparation of the final bulk.

The final bulk must be stored under validated conditions with respect to bioburden and stability.

FINAL LOT

The final bulk is sterile-filtered and distributed under aseptic conditions into sterile containers, which may subsequently be freeze-dried.

As part of the in-process control each container (vial, syringe or ampoule) is inspected after filling to eliminate containers that contain visible particles. During development of the product it must be demonstrated that either the process will not generate visible proteinaceous particles in the final lot or such particles are reduced to a low level as justified and authorised.

CHARACTERS

Liquid preparations are clear or slightly opalescent, colourless or slightly coloured liquids. Freeze-dried products are white or slightly coloured powders or solid friable masses. After reconstitution they show the same characteristics as liquid preparations.

IDENTIFICATION

The identity is established by suitable validated methods comparing the product with the reference preparation, where appropriate. The assay also contributes to identification.

TESTS

Appearance. Liquid or reconstituted freeze-dried preparations comply with the limits approved for the particular product with regard to degree of opalescence (*2.2.1*) and degree of coloration (*2.2.2*). They are without visible particles, unless otherwise justified and authorised.

Solubility. Freeze-dried preparations dissolve completely in the prescribed volume of reconstituting liquid, within a defined time, as approved for the particular product.

pH (*2.2.3*). It complies with the limits approved for the particular product.

Osmolality (*2.2.35*): minimum 240 mosmol/kg, unless otherwise justified and authorised.

Extractable volume (*2.9.17*). It complies with the test for extractable volume.

Total protein (*2.5.33*). It complies with the limits approved for the particular product.

Molecular-size distribution. Molecular-size distribution is determined by a suitable method, for example size-exclusion chromatography (*2.2.30*). It complies with the limits approved for the particular product.

Molecular identity and structural integrity. Depending on the nature of the monoclonal antibody, its microheterogeneity and isoforms, a number of different tests can be used to demonstrate molecular identity and structural integrity. These tests may include peptide mapping, isoelectric focusing, ion-exchange chromatography, hydrophobic interaction chromatography, oligosaccharide mapping, monosaccharide content and mass spectrometry.

Purity. Tests for process- and product-related impurities are carried out by suitable validated methods. Provided that tests for process-related impurities have been carried out on the active substance or on the final bulk with satisfactory results, they may be omitted on the final lot.

Stabiliser. Where applicable, it complies with the limits approved for the particular product.

Water (*2.5.12*). Freeze-dried products comply with the limits approved for the particular product.

Sterility (*2.6.1*). It complies with the test for sterility.

Bacterial endotoxins (*2.6.14*). It complies with the limits approved for the particular product.

Tests applied to modified antibodies. Suitable tests are carried out depending on the type of modification.

ASSAY

Carry out a suitable biological assay compared to the reference preparation. Design of the assay and calculation of the results are made according to the usual principles (for example, *5.3*).

STORAGE

As stated on the label.

Expiry date. The expiry date is calculated from the date of sterile filtration, the date of filling (for liquid preparations) or the date of freeze-drying (where applicable).

LABELLING

The label states:

- the number of units per millilitre, where applicable;
- the quantity of protein per container;
- the quantity of monoclonal antibody in the container;
- for liquid preparations, the volume of the preparation in the container;
- for freeze-dried preparations:
  - the name and the volume of the reconstitution liquid to be added;
  - the period of time within which the monoclonal antibody is to be used after reconstitution;
- the dilution to be made before use of the product, where applicable.

04/2013:2619

PHARMACEUTICAL PREPARATIONS

Pharmaceutica

INTRODUCTION

This monograph is intended to be a reference source of standards in the European Pharmacopoeia on active substances, excipients and dosage forms, which are to be applied in the manufacture/preparation of pharmaceuticals, but not a guide on how to manufacture as there is specific guidance available covering methods of manufacture and associated controls.

It does not cover investigational medicinal products, but competent authorities may refer to pharmacopoeial standards when authorising clinical trials using investigational medicinal products.

DEFINITION

Pharmaceutical preparations are medicinal products generally consisting of active substances that may be combined with excipients, formulated into a dosage form suitable for the intended use, where necessary after reconstitution, presented in a suitable and appropriately labelled container.

Pharmaceutical preparations may be licensed by the competent authority, or unlicensed and made to the specific needs of patients according to legislation. There are 2 categories of unlicensed pharmaceutical preparations:

- extemporaneous preparations, i.e. pharmaceutical preparations individually prepared for a specific patient or patient group, supplied after preparation;
- stock preparations, i.e. pharmaceutical preparations prepared in advance and stored until a request for a supply is received.

In addition to this monograph, pharmaceutical preparations also comply with the General Notices and with the relevant general chapters of the Pharmacopoeia. General chapters are normally given for information and become mandatory when referred to in a general or specific monograph, unless such reference is made in a way that indicates that it is not the intention to make the text referred to mandatory but rather to cite it for information.

Where relevant, pharmaceutical preparations also comply with the dosage form monographs (e.g. *Capsules (0016)*, *Tablets (0478)*) and general monographs relating to pharmaceutical preparations (e.g. *Allergen products (1063)*, *Herbal teas (1435)*, *Homoeopathic preparations (1038)*, *Immunosera for human use, animal (0084)*, *Immunosera for veterinary use (0030)*, *Monoclonal antibodies for human use (2031)*, *Radiopharmaceutical preparations (0125)*, *Vaccines for human use (0153)*, *Vaccines for veterinary use (0062)*).

Where pharmaceutical preparations are manufactured/prepared using materials of human or animal origin, the general requirements of general chapters *5.1.7. Viral safety*, *5.2.6. Evaluation of safety of veterinary vaccines and immunosera* and *5.2.8. Minimising the risk of transmitting animal spongiform encephalophathy agents via human and veterinary medicinal products* apply, where appropriate.

ETHICAL CONSIDERATIONS AND GUIDANCE IN THE PREPARATION OF UNLICENSED PHARMACEUTICAL PREPARATIONS

The underlying principle of legislation for pharmaceutical preparations is that, subject to specific exemptions, no pharmaceutical preparation may be placed on the market without an appropriate marketing authorisation. The exemptions from the formal licensing requirement allow the supply of unlicensed products to meet the special needs of individual patients. However, when deciding to use an unlicensed preparation all health professionals involved (e.g. the prescribing practitioners and/or the preparing pharmacists) have, within their area of responsibilities, a duty of care to the patient receiving the pharmaceutical preparation.

In considering the preparation of an unlicensed pharmaceutical preparation, a suitable level of risk assessment is undertaken.

The risk assessment identifies:

- the criticality of different parameters (e.g. quality of active substances, excipients and containers; design of the preparation process; extent and significance of testing; stability of the preparation) to the quality of the preparation; and
- the risk that the preparation may present to a particular patient group.

Based on the risk assessment, the person responsible for the preparation must ensure, with a suitable level of assurance, that the pharmaceutical preparation is, throughout its shelf-life, of an appropriate quality and suitable and fit for its purpose. For stock preparations, storage conditions and shelf-life have to be justified on the basis of, for example, analytical data or professional judgement, which may be based on literature references.

PRODUCTION

Manufacture/preparation must take place within the framework of a suitable quality system and be compliant with the standards relevant to the type of product being made. Licensed products must comply with the requirements of their licence. For unlicensed products a risk assessment as outlined in the section 'Ethical considerations and guidance in the preparation of unlicensed pharmaceutical preparations' is of special importance, as these products are not previously assessed by the competent authority.

Formulation. During pharmaceutical development or prior to manufacture/preparation, suitable ingredients, processes, tests and specifications are identified and justified in order to ensure the suitability of the product for the intended purpose. This includes consideration of the properties required in order to identify whether specific ingredient properties or process steps are critical to the required quality of the pharmaceutical preparation.

Active substances and excipients. Active substances and excipients used in the formulation of pharmaceutical preparations comply with the requirements of the relevant general monographs, e.g. *Substances for pharmaceutical use (2034)*, *Essential oils (2098)*, *Extracts (0765)*, *Herbal drugs (1433)*, *Herbal drug preparations (1434)*, *Herbal drugs for homoeopathic preparations (2045)*, *Mother tinctures for homoeopathic preparations (2029)*, *Methods of preparation of homoeopathic stocks and potentisation (2371)*, *Products of fermentation (1468)*, *Products with risk of transmitting agents of animal spongiform encephalopathies (1483)*, *Products of recombinant DNA technology (0784)*, *Vegetable fatty oils (1579)*.

In addition, where specific monographs exist, the quality of the active substances and excipients used complies with the corresponding monographs.

Where no specific monographs exist, the required quality must be defined, taking into account the intended use and the involved risk.

When physicochemical characteristics of active substances and functionality-related characteristics (FRCs) of excipients (e.g. particle-size distribution, viscosity, polymorphism) are critical in relation to their role in the manufacturing process and quality attributes of the pharmaceutical preparation, they must be identified and controlled.

Detailed information on FRCs is given in general chapter *5.15. Functionality-related characteristics of excipients*.

Microbiological quality. The formulation of the pharmaceutical preparation and its container must ensure that the microbiological quality is suitable for the intended use.

During development, it shall be demonstrated that the antimicrobial activity of the preparation as such or, if necessary, with the addition of a suitable preservative or preservatives, or by the selection of an appropriate container, provides adequate protection from adverse effects that may arise from microbial contamination or proliferation during the storage and use of the preparation. A suitable test method together with criteria for evaluating the preservative properties of the formulation are provided in general chapter *5.1.3. Efficacy of antimicrobial preservation*.

If preparations do not have adequate antimicrobial efficacy and do not contain antimicrobial preservatives they are supplied in single-dose containers, or in multidose containers that prevent microbial contamination of the contents after opening.

In the manufacture/preparation of non-sterile pharmaceutical preparations, suitable measures are taken to ensure their microbial quality; recommendations on this aspect are provided in general chapters *5.1.4. Microbiological quality of non-sterile pharmaceutical preparations and substances for pharmaceutical use* and *5.1.8. Microbiological quality of herbal medicinal products for oral use and extracts used in their preparation*.

Sterile preparations are manufactured/prepared using materials and methods designed to ensure sterility and to avoid the introduction of contaminants and the growth of micro-organisms; recommendations on this aspect are provided in general chapter *5.1.1. Methods of preparation of sterile products*.

Containers. A suitable container is selected. Consideration is given to the intended use of the preparation, the properties of the container, the required shelf-life, and product/container incompatibilities. Where applicable, containers for pharmaceutical preparations comply with the requirements for containers (*3.2* and subsections) and materials used for the manufacture of containers (*3.1* and subsections).

Stability. Stability requirements of pharmaceutical preparations are dependent on their intended use and on the desired storage time.

Where applicable, the probability and criticality of possible degradation products of the active substance(s) and/or reaction products of the active substance(s) with an excipient and/or the immediate container must be assessed. Depending on the result of this assessment, limits of degradation and/or reaction products are set and monitored in the pharmaceutical preparation. Licensed products require a stability exercise.

Methods used for the purpose of stability testing for all relevant characteristics of the preparation are validated as stability indicating, i.e. the methods allow the quantification of the relevant degradation products and physical characteristic changes.

TESTS

Relevant tests to apply in order to ensure the appropriate quality of a particular dosage form are described in the specific dosage form monographs.

Where it is not practical, for unlicensed pharmaceutical preparations, to carry out the tests (e.g. batch size, time restraints), other suitable methods are implemented to ensure that the appropriate quality is achieved in accordance with the risk assessment carried out and any local guidance or legal requirements.

Stock preparations are normally tested to a greater extent than extemporaneous preparations.

The following tests are applicable to many preparations and are therefore listed here.

Appearance. The appearance (e.g. size, shape and colour) of the pharmaceutical preparation is controlled.

Identity and purity tests. Where applicable, the following tests are carried out on the pharmaceutical preparation:

- identification of the active substance(s);
- identification of specific excipient(s), such as preservatives;
- purity tests (e.g. investigation of degradation products, residual solvents (*2.4.24*) or other related impurities, sterility (*2.6.1*));
- safety tests (e.g. safety tests for biological products).

Uniformity (*2.9.40* or *2.9.5*/*2.9.6*). Pharmaceutical preparations presented in single-dose units comply with the test(s) as prescribed in the relevant specific dosage form monograph. If justified and authorised, general chapter *2.9.40* can be applicable only at the time of release.

Special uniformity requirements apply in the following cases:

- for herbal drugs and herbal drug preparations, compliance with general chapter *2.9.40* is not required;
- for homoeopathic preparations, the provisions of general chapters *2.9.6* and *2.9.40* are normally not appropriate, however in certain circumstances compliance with these chapters may be required by the competent authority;
- for single- and multivitamin and trace-element preparations, compliance with general chapters *2.9.6* and *2.9.40* (*content uniformity only*) is not required;
- in justified and authorised circumstances, for other preparations, compliance with general chapters *2.9.6* and *2.9.40* may not be required by the competent authority.

Reference standards. Reference standards may be needed at various stages for quality control of pharmaceutical preparations. They are established and monitored taking due account of general chapter *5.12. Reference standards*.

ASSAY

Unless otherwise justified and authorised, contents of active substances and specific excipients such as preservatives are determined in pharmaceutical preparations. Limits must be defined and justified.

Suitable and validated methods are used. If assay methods prescribed in the respective active substance monographs are used, it must be demonstrated that they are not affected by the presence of the excipients and/or by the formulation.

Reference standards. See Tests.

LABELLING AND STORAGE

The relevant labelling requirements given in the general dosage form monographs apply. In addition, relevant European Union or other applicable regulations apply.

GLOSSARY

Formulation: the designing of an appropriate formula (including materials, processes, etc.) that will ensure that the patient receives the suitable pharmaceutical preparation in an appropriate form that has the required quality and that will be stable and effective for the required length of time.

Licensed pharmaceutical preparation: a medicinal product that has been granted a marketing authorisation by a competent authority. Synonym: authorised pharmaceutical preparation.

Manufacture: all operations of purchase of materials and products, Production, Quality Control, release, storage, distribution of medicinal products and the related controls.

Preparation (of an unlicensed pharmaceutical preparation): the 'manufacture' of unlicensed pharmaceutical preparations by or at the request of pharmacies or other healthcare establishments (the term 'preparation' is used

instead of 'manufacture' in order clearly to distinguish it from the industrial manufacture of licensed pharmaceutical preparations).

Reconstitution: manipulation to enable the use or application of a medicinal product with a marketing authorisation in accordance with the instructions given in the summary of product characteristics or the patient information leaflet.

Risk assessment: the identification of hazards and the analysis and evaluation of risks associated with exposure to those hazards.

Unlicensed pharmaceutical preparation: a medicinal product that is exempt from the need of having a marketing authorisation issued by a competent authority but is made for specific patients' needs according to legislation.

01/2008:1468

PRODUCTS OF FERMENTATION

Producta ab fermentatione

This monograph applies to indirect gene products obtained by fermentation. It is not applicable to:

- *monographs in the Pharmacopoeia concerning vaccines for human or veterinary use*;
- *products derived from continuous cell lines of human or animal origin*;
- *direct gene products that result from the transcription and translation from nucleic acid to protein, whether or not subject to post-translational modification*;
- *products obtained by semi-synthesis from a product of fermentation and those obtained by biocatalytic transformation*;
- *whole broth concentrates or raw fermentation products.*

This monograph provides general requirements for the development and manufacture of products of fermentation. These requirements are not necessarily comprehensive in a given case and requirements complementary or additional to those prescribed in this monograph may be imposed in an individual monograph or by the competent authority.

General monographs

DEFINITION

For the purposes of this monograph, products of fermentation are active or inactive pharmaceutical substances produced by controlled fermentation as indirect gene products. They are primary or secondary metabolites of micro-organisms such as bacteria, yeasts, fungi and micro-algae, whether or not modified by traditional procedures or recombinant DNA (rDNA) technology. Such metabolites include vitamins, amino acids, antibiotics, alkaloids and polysaccharides.

They may be obtained by batch or continuous fermentation processes followed by procedures such as extraction, concentration, purification and isolation.

PRODUCTION

Production is based on a process that has been validated and shown to be suitable. The extent of validation depends on the critical nature of the respective process step.

CHARACTERISATION OF THE PRODUCER MICRO-ORGANISM

The history of the micro-organism used for production is documented. The micro-organism is adequately characterised. This may include determination of the phenotype of the micro-organism, macroscopic and microscopic methods and biochemical tests and, if appropriate, determination of the genotype of the micro-organism and molecular genetic tests.

PROCESSES USING A SEED-LOT SYSTEM

The *master cell bank* is a homogeneous suspension or lyophilisate of the original cells distributed into individual containers for storage. The viability and productivity of the cells under the selected storage conditions and their suitability for initiating a satisfactory production process after storage must be demonstrated.

Propagation of the master cell bank may take place through a seed-lot system that uses a working cell bank.

The *working cell bank* is a homogeneous suspension or lyophilisate of the cell material derived from the master cell bank, distributed in equal volumes into individual containers for storage (for example, in liquid nitrogen).

Production may take place by batch or continuous culture and may be terminated under defined conditions.

All containers in a cell bank are stored under identical conditions. Once removed from storage, the individual ampoules, vials or culture straws are not returned to the cell bank.

PROCESSES USING STAGED GROWTH IN CULTURES

The contents of a container of the working cell bank are used, if necessary after resuspension, to prepare an inoculum in a suitable medium. After a suitable period of growth, the cultures are used to initiate the fermentation process, if necessary following preculture in a prefermentor. The conditions to be used at each stage of the process are defined and must be met with each production run.

CHANGE CONTROL

If the production process is altered in a way that causes a significant change in the impurity profile of the product, the critical steps associated with this change in impurity profile are revalidated.

If a significant change has taken place in the micro-organism used for production that causes a significant change in the impurity profile of the product, the critical steps of the production process associated with this change, particularly the procedure for purification and isolation, are revalidated.

Revalidation includes demonstration that new impurities present in the product as a result of the change are adequately controlled by the test procedures. If necessary, additional or alternative tests must be introduced with appropriate limits. If the change in the process or in the micro-organism results in an increase in the level of an impurity already present, the acceptability of such an increase is addressed.

When a master cell bank is replaced, the critical steps of the production process must be revalidated to the extent necessary to demonstrate that no adverse change has occurred in the quality and safety of the product. Particular attention must be given to possible changes in the impurity profile of the product if a modified or new micro-organism is introduced into the process.

RAW MATERIALS

The raw materials employed in the fermentation and/or down-stream processing are of suitable quality for the intended purpose. They are tested to ensure that they comply with written specifications.

Levels of bioburden in media or in the inlet air for aeration are reduced to an adequately low level to ensure that if microbiological contamination occurs, it does not adversely affect the quality, purity and safety of the product. Addition of components such as nutrients, precursors, and substrates during fermentation takes place aseptically.

IN-PROCESS CONTROLS

In-process controls are in place to ensure the consistency of the conditions during fermentation and down-stream processing and of the quality of the isolated product. Particular attention

must be paid to ensure that any microbial contamination that adversely affects the quality, purity and safety of the product is detected by the controls applied.

Production conditions may be monitored, as appropriate, by suitable procedures for example to control and check:

- temperature,
- pH,
- rate of aeration,
- rate of agitation,
- pressure,

and to monitor the concentration of the required product.

DOWN-STREAM PROCESSING

At the end of fermentation, the producer micro-organism is inactivated or removed. Further processing is designed to reduce residues originating from the culture medium to an acceptable level and to ensure that the desired product is recovered with consistent quality.

Various purification processes may be used, for example, charcoal treatment, ultrafiltration and solvent extraction. It must be demonstrated that the process or processes chosen reduce to a minimum or remove:

- residues from the producer micro-organism, culture media, substrates and precursors,
- unwanted transformation products of substrates and precursors.

If necessary, suitable tests are performed either as in-process controls or on the isolated product of fermentation.

IDENTIFICATION, TESTS AND ASSAY

The requirements with which the product must comply throughout its period of validity, as well as specific test methods, are stated in the individual monographs.

01/2008:1483

PRODUCTS WITH RISK OF TRANSMITTING AGENTS OF ANIMAL SPONGIFORM ENCEPHALOPATHIES

Producta cum possibili transmissione vectorium enkephalopathiarum spongiformium animalium

DEFINITION

Products with risk of transmitting agents of animal spongiform encephalopathies are those derived from tissues or secretions of animals susceptible to transmissible spongiform encephalopathies other than by experimental challenge. This monograph applies to all substances or preparations obtained from such animals and to all substances or preparations where products obtained from such animals are included as active substances or excipients or have been used during production, for example as raw or source materials, starting materials or reagents.

PRODUCTION

Production complies with chapter *5.2.8. Minimising the risk of transmitting animal spongiform encephalophathy agents via human and veterinary medicinal products.*

01/2014:0125

RADIOPHARMACEUTICAL PREPARATIONS

Radiopharmaceutica

DEFINITIONS

Radiopharmaceutical preparations or radiopharmaceuticals are medicinal products which, when ready for use, contain 1 or more radionuclides (radioactive isotopes) included for a medicinal purpose.

For the purpose of this general monograph, radiopharmaceutical preparations also cover:

- radionuclide generators: any system incorporating a fixed parent radionuclide from that is produced a daughter radionuclide that is to be obtained by elution or by any other method and used in a radiopharmaceutical preparation;
- kits for radiopharmaceutical preparation: any preparation to be reconstituted or combined with radionuclides in the final radiopharmaceutical preparation, usually prior to its administration;
- radionuclide precursors: any radionuclide produced for radiolabelling of another substance prior to administration;
- chemical precursors: non-radioactive substances for combination with a radionuclide.

Radionuclide precursors may be supplied as solutions for radiolabelling.

A nuclide is a species of atom characterised by the number of protons and neutrons in its nucleus (and hence by its atomic number Z, and mass number A) and also by its nuclear energy state. Isotopes of an element are nuclides with the same atomic number but different mass numbers. Nuclides containing an unstable arrangement of protons and neutrons will transform spontaneously to either a stable or another unstable combination of protons and neutrons with a constant statistical probability. Such nuclides are said to be radioactive and are called radionuclides. The initial unstable nuclide is referred to as the parent radionuclide and the resulting nuclide as the daughter nuclide.

Decay or transformation of radionuclides may involve the emission of charged particles, electron capture (EC) or isomeric transition (IT). The charged particles emitted from nuclei may be alpha particles (nuclei of ^{4}He) or beta particles (negatively charged, generally called electrons, or positively charged, generally called positrons). Alpha decay usually concerns heavy nuclei ($Z > 82$). Radionuclides with a deficit of protons usually decay by emitting electrons. Radionuclides with a deficit of neutrons usually decay by electron capture or by emitting positrons. In the latter case, radionuclides are called positron emitters. Positrons are annihilated after interaction with electrons in the surrounding matter. The annihilation results in the emission of 2 gamma photons, each with energy of 0.511 MeV, generally emitted at 180° to each other (annihilation radiation). All decay modes may be accompanied by an emission of gamma rays. The emission of gamma rays may be partly or completely replaced by the ejection of electrons, known as internal conversion electrons. This phenomenon, like the process of electron capture, causes a secondary emission of X-rays (due to a reorganisation of the electrons in the atom). This secondary emission may itself be partly replaced by the ejection of electrons, known as Auger electrons.

Radioactivity: generally the term 'radioactivity' is used both to describe the phenomenon of radioactive decay and to express the physical quantity of this phenomenon.

The radioactivity of a preparation is the number of nuclear disintegrations or transformations per unit time.

General monographs

In the International System (SI), radioactivity is expressed in becquerel (Bq), which is 1 nuclear transformation per second. Absolute radioactivity measurements require a specialised laboratory but identification of radioactivity and quantitative measurement of radioactivity can be carried out relatively by comparing the measured samples with standardised preparations provided by laboratories recognised by the competent authority or by using a calibrated instrument.

Radioactive decay: any radionuclide decays at an exponential rate with its characteristic decay constant.

The curve of exponential decay (decay curve) is described by the following expression:

$$A_t = A_0 e^{-\lambda t}$$

A_t = the radioactivity at time t;

A_0 = the radioactivity at time $t = 0$;

λ = the decay constant, characteristic of each radionuclide;

e = the base of natural logarithms.

The half-life ($T_{1/2}$) is the time in which a given radioactivity (amount) of a radionuclide decays to half its initial value.

It is related to the decay constant (λ) by the following equation:

$$T_{1/2} = \frac{ln\,2}{\lambda}$$

The equation of exponential decay can thus be expressed also in the following way, useful for the fast estimation of the radioactivity left after elapsing time t:

$$A_t = A_0 \left(\frac{1}{2}\right)^{\frac{t}{T_{1/2}}}$$

The penetrating power of each radiation varies considerably according to its nature and its energy. Alpha particles are completely absorbed in a thickness of a few micrometres to some tens of micrometres of matter. Beta particles are completely absorbed in a thickness of several millimetres to several centimetres of matter. Gamma rays are not completely absorbed but only attenuated and a tenfold reduction may require, for example, several centimetres of lead. The denser the absorbent, the shorter the range of alpha and beta particles and the greater the attenuation of gamma rays.

Each radionuclide is characterised by an invariable half-life, expressed in units of time and by the nature and energy of its radiation or radiations. The energy is expressed in electronvolts (eV), kilo-electronvolts (keV) or mega-electronvolts (MeV).

Radionuclidic purity: the ratio, expressed as a percentage, of the radioactivity of the radionuclide concerned to the total radioactivity of the radiopharmaceutical preparation. The relevant potential radionuclidic impurities are listed with their limits in the individual monographs.

Radiochemical purity: the ratio, expressed as a percentage, of the radioactivity of the radionuclide concerned which is present in the radiopharmaceutical preparation in the stated chemical form, to the total radioactivity of that radionuclide present in the radiopharmaceutical preparation. The relevant potential radiochemical impurities are listed with their limits in the individual monographs.

Chemical purity: in monographs on radiopharmaceutical preparations, chemical purity is controlled by specifying limits for chemical impurities.

Isotopic carrier: a stable isotope of the element concerned either present in or added to the radioactive preparation in the same chemical form as that in which the radionuclide is present.

Carrier-free preparation: a preparation free from stable isotopes of the same element as the radionuclide concerned present in the preparation in the stated chemical form or at the position of the radionuclide in the molecule concerned.

No-carrier-added preparation: a preparation to which no stable isotopes of the same element as the radionuclide concerned are intentionally added in the stated chemical form or at the position of the radionuclide in the molecule concerned.

Specific radioactivity: the radioactivity of a radionuclide per unit mass of the element or of the chemical form concerned, e.g. becquerel per gram or becquerel per mole.

Radioactivity concentration: the radioactivity of a radionuclide per unit volume or unit mass of the preparation. For radiopharmaceutical solutions, it is expressed as radioactivity per unit volume of the preparation.

Total radioactivity: the radioactivity of the radionuclide, expressed per unit (vial, capsule, ampoule, generator, etc).

Chemical precursors for synthesis of radioactive substances: if the active substance of a radiopharmaceutical preparation is not isolated, the chemical precursor for its synthesis is considered as a substance for pharmaceutical use.

It is recommended to test each batch of chemical precursor material in production runs before its use for the manufacture of radiopharmaceutical preparations to ensure that, under specified production conditions, the substance yields the radiopharmaceutical preparation in the desired quantity and of the quality specified.

Period of validity: the time during which specifications described in the monograph must be fulfilled.

PRODUCTION

A radiopharmaceutical preparation contains its radionuclide:

- as an element in atomic or molecular form, e.g. ^{133}Xe, $[^{15}O]O_2$;
- as an ion, e.g. $[^{131}I]$iodide, $[^{99m}Tc]$pertechnetate;
- included in, adsorbed on or attached to molecules by chelation, e.g. $[^{111}In]$indium oxine, or by covalent bonding, e.g. 2-$[^{18}F]$fluoro-2-deoxy-D-glucose.

Radionuclides can be produced in the following ways:

- in reactions of neutrons (target irradiation in nuclear reactors);
- in reactions of charged particles (target irradiation using accelerators, in particular cyclotrons);
- by its separation from radionuclide generators.

The probability of nuclear reaction occurrence depends on the nature and energy of the incident particles (protons, neutrons, deuterons etc.) and on the nature of the nucleus that is irradiated by them. The rate of production (yield) of a given radionuclide resulting from the irradiation depends in addition on the isotopic composition of the target material and its chemical purity, and in the case of neutrons on their flux, and in the case of charged particles on beam current.

In addition to the desired nuclear reaction, simultaneous transformations usually occur. Probability of their occurrence is given by the same factors as mentioned in the previous paragraph. Such simultaneous transformations may give rise to radionuclidic impurities.

The nuclear reaction (transformation) can be written in the form: target nucleus (incident particle, emitted particle) produced nucleus.

Examples: $^{58}Fe(n,\gamma)^{59}Fe$

$^{18}O(p,n)^{18}F$

NEUTRON IRRADIATION

Irradiation of stable radionuclides in nuclear reactors usually results in proton-deficient nuclei, i.e. electron emitters that are formed in (n,γ) reactions (so-called radiative capture). The product is isotopic with the target nucleus and it may thus contain a considerable amount of carrier.

A number of nuclides with high atomic number are fissionable by neutrons. Nuclear fission, denoted as (n, f) reaction, results in a large number of radionuclides of various masses and half-lives. The most frequently used fission is that of ^{235}U. Iodine-131, molybdenum-99 and xenon-133 can be produced by irradiation of ^{235}U in nuclear reactors and by their separation from more than 200 radionuclides formed in that process.

CHARGED PARTICLE IRRADIATION

Irradiation of stable radionuclides with charged particles usually results in neutron-deficient nuclei that decay either by electron capture or by positron emission. They are formed in particular in (p, xn) reactions (where x is the number of emitted neutrons). The product is not isotopic with the target nucleus and its specific radioactivity might be close to that of a carrier-free preparation.

RADIONUCLIDE GENERATORS

Radionuclide generator systems use a parent radionuclide which decays to a daughter radionuclide with a shorter half-life.

By separating the daughter radionuclide from the parent radionuclide by a chemical or physical process, it is possible to use the daughter radionuclide at a considerable distance from the production site of the generator despite its short half-life.

TARGET MATERIALS

The isotopic composition and purity of the target material together with other factors such as the nature and energy of incident particles will determine the relative percentages of the principal radionuclide and radionuclidic impurities produced by irradiation. The use of isotopically enriched target material in which the abundance of the required target nuclide has been artificially increased, can improve the production yield and the purity of the desired radionuclide.

The chemical form, the purity and the physical state of the target material and the chemical additives, as well as the irradiation conditions and the direct physical and chemical environment, determine the chemical state and chemical purity of the radionuclides that are produced. In the production of radionuclides, and particularly of radionuclides with a short half-life, it may not be possible to determine any of these quality criteria before further processing and manufacture of radiopharmaceutical preparations. Therefore the quality of each batch of target material is assessed before its use in routine radionuclide production and manufacture of radiopharmaceutical preparations.

The target material is contained in a holder in gaseous, liquid or solid state, in order to be irradiated by a beam of particles. For neutron irradiation, the target material is commonly contained in quartz ampoules or high-purity aluminium or titanium containers. It is necessary to ascertain that no interaction can occur between the container and its contents under the irradiation conditions.

For charged particle irradiation, the holder for target material is constructed of an appropriate metal, possibly with inlet and outlet ports, a surrounding cooling system and usually a thin metal foil target window.

To evaluate all effects on the efficiency of the production of the radionuclide in terms of quality and quantity, the production procedure must clearly describe and take into consideration: the target material, the construction of the holder for target material, method of irradiation and separation of the desired radionuclide.

CHARACTERS

The *Table of physical characteristics of radionuclides* (*5.7*) summarises the most commonly accepted physical characteristics of radionuclides used in preparations that are the subject of monographs in the European Pharmacopoeia. In addition, the Table states the physical characteristics of the main potential radionuclidic impurities of the radionuclides mentioned in the monographs.

The term 'transition probability' means the probability of the transformation of a nucleus in a given energy state, via the transition concerned. Instead of 'probability' the term 'abundance' is also used.

The term 'emission probability' means the probability that an atom of a radionuclide gives rise to the emission of the particles or radiation concerned.

Irrespective of which meaning is intended, probability is usually stated as a percentage.

IDENTIFICATION

A radionuclide is generally identified by its half-life or by the nature and energy of its radiation or radiations or by both, as prescribed in the monograph.

Approximate half-life: the half-life as determined over a relatively short time period to allow release for use of radiopharmaceutical preparations.

The calculated approximate half-life is within the range of the values stated in the individual monograph.

Determination of the nature and energy of the radiation. The nature and energy of the radiation emitted are determined using spectrometry. The nature and energy of the radiation of positron emitters is usually not determined; their identification is performed by determination of their half-life and gamma-ray spectrum.

TESTS

It is sometimes difficult to carry out some of the following tests before releasing the batch for use when the half-life of the radionuclide in the preparation is short. The individual monograph indicates the tests that need not be completed before release for use. These tests then constitute a control of the quality of production.

Non-radioactive substances and related substances. This section prescribes the determination of non-radioactive substances and related substances that can be present.

Residual solvents. Residual solvents are limited according to general chapter *5.4. Residual solvents*, using the methods given in general chapter *2.4.24. Identification and control of residual solvents* or another suitable method.

RADIONUCLIDIC PURITY

Radionuclidic impurities may arise during the production and decay of a radionuclide. Potential radionuclidic impurities may be mentioned in the monographs and their characteristics are described in general chapter *5.7. Table of physical characteristics of radionuclides mentioned in the European Pharmacopoeia*.

In most cases, to establish the radionuclidic purity of a radiopharmaceutical preparation, the identity of every radionuclide present and its radioactivity must be known. Generally, the most useful method for examination of the radionuclidic purity of gamma- and X-ray emitting radionuclides is gamma-ray spectrometry. The use of sodium iodide detectors may cause a problem: the peaks due to gamma-ray emitting impurities may be concealed in the spectrum of the principal radionuclide or left unresolved from peaks of other radionuclidic impurities in the preparation. Alpha- and beta-particle emitting impurities that do not emit gamma- or X-rays cannot be detected in this way. For alpha- and beta-emitters other methods must be employed.

The individual monographs prescribe the radionuclidic purity required and may set limits for specific radionuclidic impurities (for example, molybdenum-99 in technetium-99^m). While these requirements are necessary, they are not in themselves sufficient to ensure that the radionuclidic purity of a preparation is sufficient for its clinical use. The manufacturer must examine the product in detail and especially must examine preparations of radionuclides with a short half-life for impurities with a long half-life after a suitable period of decay. In this way, information on the suitability of the manufacturing processes and the adequacy of the testing procedures is obtained. In cases where 2 or more positron-emitting radionuclides need to be identified and/or differentiated, for example the presence of ^{18}F-impurities in ^{13}N-preparations, half-life determinations need to be carried out in addition to gamma-ray spectrometry.

Due to differences in the half-lives of the different radionuclides present in a radiopharmaceutical preparation, the radionuclidic purity changes with time.

RADIOCHEMICAL PURITY

Radiochemical impurities may originate from:

- radionuclide production;
- subsequent chemical procedures;
- incomplete preparative separation;
- chemical changes during storage.

The determination of radiochemical purity requires separation of the different chemical substances containing the radionuclide and determination of the percentage of radioactivity of the radionuclide concerned associated with the stated chemical form. The radiochemical purity section of an individual monograph may include limits for specified radiochemical impurities, including isomers.

In principle, any method of analytical separation may be used in the determination of radiochemical purity. For example, the monographs for radiopharmaceutical preparations may include paper chromatography (*2.2.26*), thin-layer chromatography (*2.2.27*), electrophoresis (*2.2.31*), size-exclusion chromatography (*2.2.30*), gas chromatography (*2.2.28*) and liquid chromatography (*2.2.29*). The technical description of these analytical methods is set out in the monographs. Moreover, certain precautions special to radiopharmaceuticals must also be considered, such as radiation protection, measurement geometry, detector linearity, use of carriers, dilution of the preparation.

Specific radioactivity

Specific radioactivity is usually calculated taking into account the radioactivity concentration and the concentration of the chemical substance being studied, after verification that the radioactivity is attributable only to the radionuclide (radionuclidic purity) and the chemical species (radiochemical purity) concerned.

Specific radioactivity changes with time. The statement of the specific radioactivity therefore includes reference to a date and, if necessary, time.

Physiological distribution

Tests involving animals should be avoided wherever possible. Where the tests for identity and for radiochemical purity are not adequate to completely define and control the radiochemical species in a radiopharmaceutical preparation, a physiological distribution test may be required. The distribution pattern of radioactivity observed in specified organs, tissues or other body compartments of an appropriate animal species can be a reliable indication of the suitability for the intended purpose.

Alternatively, a physiological distribution test can serve to establish the biological equivalence of the preparation under test with similar preparations known to be clinically effective.

The individual monograph prescribes the details concerning the conduct of the test and the physiological distribution requirements that must be met.

In general, the test is performed as follows.

Each of 3 animals is injected intravenously with the preparation. In some cases, dilution immediately before injection may be necessary.

Immediately after injection each animal is placed in a separate cage for collection of excreta and prevention of contamination of the body surface of the animal. At the specified time after injection, the animals are euthanised by an appropriate method and dissected. Selected organs and tissues are assayed for their radioactivity. The physiological distribution is then calculated and expressed in terms of the percentage of the administered radioactivity that is found in each of the selected organs or tissues, taking into account corrections for radioactive decay. For some radiopharmaceutical preparations it is necessary to determine the ratio of the radioactivity in weighed samples of selected tissues (radioactivity/mass).

A preparation meets the requirements of the test if the distribution of radioactivity in at least 2 of the 3 animals complies with all the specified criteria.

Disregard the results from any animal showing evidence of extravasation of the injection (observed at the time of injection or revealed by subsequent assay of tissue radioactivity). In that case the test may be repeated.

Sterility

Radiopharmaceutical preparations for parenteral administration comply with the test for sterility. They must be prepared using precautions designed to exclude microbial contamination and to ensure sterility. The test for sterility is carried out as described in the general method (*2.6.1*). Special difficulties arise with radiopharmaceutical preparations because of the short half-life of some radionuclides, the small size of batches and the radiation hazards. In the case that the monograph states that the preparation can be released for use before completion of the test for sterility, the sterility test must be started as soon as practically possible in relation to the radiation. If not started immediately, samples are stored under conditions that are shown to be appropriate in order to prevent false negative results. Parametric release (*5.1.1*) of the product manufactured by a fully validated process is the method of choice in such cases. When aseptic manufacturing is used, the test for sterility has to be performed as a control of the quality of production.

When the size of a batch of the radiopharmaceutical preparation is limited to 1 or a few samples, sampling the batch for sterility testing according to the recommendations of the general method (*2.6.1*) may not be applicable.

When the half-life of the radionuclide is less than 5 min, the administration of the radiopharmaceutical preparation to the patient is generally on-line with a validated production system.

For safety reasons (high level of radioactivity) it is not possible to use the quantity of radiopharmaceutical preparations as required in the test for sterility (*2.6.1*). The method of membrane filtration is preferred to limit irradiation of personnel.

Notwithstanding the requirements concerning the use of antimicrobial preservatives in the monograph *Parenteral preparations (0520)*, their addition to radiopharmaceutical preparations in multidose containers is not obligatory, unless prescribed in the monograph.

Bacterial endotoxins - pyrogens

Radiopharmaceuticals for parenteral administration comply with the test for bacterial endotoxins (*2.6.14*) or with the test for pyrogens (*2.6.8*).

Eluates of radionuclide generators, solutions for radiolabelling and kits for radiopharmaceutical preparations also comply with the test for bacterial endotoxins if they are intended for the preparation of radiopharmaceuticals for parenteral administration without further purification.

Radionuclide precursors and chemical precursors comply with the test for bacterial endotoxins if intended for use in the manufacture of parenteral preparations without a further appropriate procedure for the removal of bacterial endotoxins.

The test for bacterial endotoxins is carried out as described in the general method (*2.6.14*), taking the necessary precautions to limit irradiation of the personnel carrying out the test. The limit for bacterial endotoxins is indicated in the individual monograph or calculated according to general chapter *5.1.10. Guidelines for using the test for bacterial endotoxins*.

When the nature of the radiopharmaceutical preparation or the precursor results in an interference in the test for bacterial endotoxins by inhibition or activation and it is not possible to eliminate the interfering factor(s), the test for pyrogens (*2.6.8*) may be specifically prescribed.

STORAGE

Store preparations containing radioactive substances in an airtight container that is sufficiently shielded to protect personnel from irradiation by primary or secondary emissions and that complies with national and international regulations concerning the storage of radioactive substances. During storage, containers may darken due to irradiation. Such darkening does not necessarily involve deterioration of the preparations.

LABELLING

The labelling of radiopharmaceutical preparations complies with the relevant national and European legislation.

For preparations prepared at the site of use, the labelling can be modified.

The radioactivity of a preparation is stated at a given date. If the half-life is less than 70 days the time is also indicated, with reference to a time zone. The radioactivity at other times may be calculated from the decay equation or from tables.

In addition to the above, the label on the container, the package, a leaflet accompanying the package or a certificate of analysis accompanying the radiopharmaceutical preparation states:

- the route of administration;
- if applicable, the maximum recommended dose in millilitres;
- the name and concentration of any added antimicrobial preservative;
- where applicable, any special storage conditions.

For chemical precursors, the accompanying information recommends testing the substance in 1 or more production runs before its use for the manufacture of radiopharmaceutical preparations to ensure that, under specified production conditions, the substance yields the radiopharmaceutical preparation in the desired quantity and of the quality specified.

DETECTION AND MEASUREMENT OF RADIOACTIVITY

Detection and measurement of radioactivity are carried out according to general chapter *2.2.66. Detection and measurement of radioactivity*.

01/2008:0784

RECOMBINANT DNA TECHNOLOGY, PRODUCTS OF

Producta ab arte ADN recombinandorum

This monograph provides general requirements for the development and manufacture of products of recombinant DNA technology. These requirements are not necessarily comprehensive in a given case and requirements complementary or additional to those prescribed in this monograph may be imposed in an individual monograph or by the competent authority.

The monograph is not applicable to modified live organisms that are intended to be used directly in man and animals, for example as live vaccines.

DEFINITION

Products of rDNA technology are produced by genetic modification in which DNA coding for the required product is introduced, usually by means of a plasmid or a viral vector, into a suitable micro-organism or cell line, in which that DNA is expressed and translated into protein. The desired product is then recovered by extraction and purification. The cell or micro-organism before harbouring the vector is referred to as the host cell, and the stable association of the two used in the manufacturing process is referred to as the host-vector system.

PRODUCTION

Production is based on a validated seed-lot system using a host-vector combination that has been shown to be suitable to the satisfaction of the competent authority. The seed-lot system uses a master cell bank and a working cell bank derived from the master seed lot of the host-vector combination. A detailed description of cultivation, extraction and purification steps and a definition of the production batch shall be established.

Where products of rDNA technology are manufactured using materials of human or animal origin, the requirements of chapter *5.1.7. Viral safety* apply.

The determination of the suitability of the host-vector combination and the validation of the seed-lot system include the following elements.

CLONING AND EXPRESSION

The suitability of the host-vector system, particularly as regards microbiological purity, is demonstrated by:

Characterisation of the host cell, including source, phenotype and genotype, and of the cell-culture media;

Documentation of the strategy for the cloning of the gene and characterisation of the recombinant vector, including:

i. the origin and characterisation of the gene;

ii. nucleotide-sequence analysis of the cloned gene and the flanking control regions of the expression vector; the cloned sequences are kept to a minimum and all relevant expressed sequences are clearly identified and confirmed at the RNA level; the DNA sequence of the cloned gene is normally confirmed at the seed-lot stage, up to and beyond the normal level of population doubling for full-scale fermentation; in certain systems, for example, where multiple copies of the gene are inserted into the genome of a continuous cell line, it may be inappropriate to sequence the cloned gene at the production level; under these circumstances, Southern blot analysis of total cellular DNA or sequence analysis of the messenger RNA (mRNA) may be helpful, particular attention being paid to the characterisation of the expressed protein;

iii. the construction, genetics and structure of the complete expression vector.

General monographs

Characterisation of the host-vector system, including:

i. mechanism of transfer of the vector into the host cells;

ii. copy number, physical state and stability of the vector inside the host cell;

iii. measures used to promote and control the expression.

CELL-BANK SYSTEM

The master cell bank is a homogeneous suspension of the original cells already transformed by the expression vector containing the desired gene, distributed in equal volumes into individual containers for storage (for example, in liquid nitrogen). In some cases it may be necessary to establish separate master cell banks for the expression vector and the host cells.

The working cell bank is a homogeneous suspension of the cell material derived from the master cell bank(s) at a finite passage level, distributed in equal volumes into individual containers for storage (for example, in liquid nitrogen).

In both cell banks, all containers are treated identically during storage and, once removed from storage, the containers are not returned to the cell stock.

The cell bank may be used for production at a finite passage level or for continuous-culture production.

Production at a finite passage level

This cultivation method is defined by a limited number of passages or population doublings which must not be exceeded during production. The maximum number of cell doublings, or passage levels, during which the manufacturing process routinely meets the criteria described below must be stated.

Continuous-culture production

By this cultivation method the number of passages or population doublings is not restricted from the beginning of production. Criteria for the harvesting as well as for the termination of production have to be defined by the manufacturer. Monitoring is necessary throughout the life of the culture; the required frequency and type of monitoring will depend on the nature of the production system and the product.

Information is required on the molecular integrity of the gene being expressed and on the phenotypic and genotypic characteristics of the host cell after long-term cultivation. The acceptance of harvests for further processing must be clearly linked to the schedule of monitoring applied and a clear definition of a 'batch' of product for further processing is required.

VALIDATION OF THE CELL BANKS

Validation of the cell banks includes:

i. stability by measuring viability and the retention of the vector;

ii. identity of the cells by phenotypic features;

iii. where appropriate, evidence that the cell banks are free from potentially oncogenic or infective adventitious agents (viral, bacterial, fungal or mycoplasmal); special attention has to be given to viruses that can commonly contaminate the species from which the cell line has been derived; certain cell lines contain endogenous viruses, for example, retroviruses, which may not readily be eliminated; the expression of these organisms, under a variety of conditions known to cause their induction, shall be tested for;

iv. for mammalian cells, details of the tumorigenic potential of the cell bank shall be obtained.

CONTROL OF THE CELLS

The origin, form, storage, use and stability at the anticipated rate of use must be documented in full for all cell banks under conditions of storage and recovery. New cell banks must be fully validated.

VALIDATION OF THE PRODUCTION PROCESS

Extraction and purification

The capacity of each step of the extraction and purification procedure to remove and/or inactivate contaminating substances derived from the host cell or culture medium, including, in particular, virus particles, proteins, nucleic acids and excipients, must be validated.

Validation studies are carried out to demonstrate that the production process routinely meets the following criteria:

- exclusion of extraneous agents from the product; studies including, for example, viruses with relevant physico-chemical features are undertaken, and a reduction capacity for such contaminants at each relevant stage of purification is established;
- adequate removal of vector, host-cell, culture medium and reagent-derived contaminants from the product; the reduction capacity for DNA is established by spiking; the reduction of proteins of animal origin can be determined by immunochemical methods;
- maintenance within stated limits of the yield of product from the culture;
- adequate stability of any intermediate of production and/or manufacturing when it is intended to use intermediate storage during the process.

Characterisation of the substance

The identity, purity, potency and stability of the final bulk product are established initially by carrying out a wide range of chemical, physical, immunochemical and biological tests. Prior to release, each batch of the product is tested by the manufacturer for identity and purity and an appropriate assay is carried out.

Production consistency

Suitable tests for demonstrating the consistency of the production and purification are performed. In particular, the tests include characterisation tests, in-process controls and final-product tests as exemplified below.

AMINO-ACID COMPOSITION

Partial amino-acid sequence analysis. The sequence data permit confirmation of the correct *N*-terminal processing and detection of loss of the *C*-terminal amino acids.

Peptide mapping. Peptide mapping using chemical and/or enzymatic cleavage of the protein product and analysis by a suitable method such as two-dimensional gel electrophoresis, capillary electrophoresis or liquid chromatography must show no significant difference between the test protein and the reference preparation. Peptide mapping can also be used to demonstrate correct disulfide bonding.

DETERMINATION OF MOLECULAR MASS

Cloned-gene retention. The minimum percentage of cells containing the vector or the cloned gene after cultivation is approved by the relevant authority.

Total protein. The yield of protein is determined.

Chemical purity. The purity of the protein product is analysed in comparison with a reference preparation by a suitable method such as liquid chromatography, capillary electrophoresis or sodium dodecyl sulfate polyacrylamide gel electrophoresis.

Host-cell-derived proteins. Host-cell-derived proteins are detected by immunochemical methods, using, for example, polyclonal antisera raised against protein components of the host-vector system used to manufacture the product, unless otherwise prescribed. The following types of procedure may be used: liquid-phase displacement assays (for example, radio-immunoassay), liquid-phase direct-binding assays and direct-binding assays using antigens immobilised on nitrocellulose (or similar) membranes (for example, dot-immunoblot assays, Western blots). General requirements for the validation of immunoassay procedures are given under

2.7.1. Immunochemical Methods. In addition, immunoassay methods for host-cell contaminants meet the following criteria.

- *Antigen preparations.* Antisera are raised against a preparation of antigens derived from the host organism, into which has been inserted the vector used in the manufacturing process that lacks the specific gene coding for the product. This host cell is cultured, and proteins are extracted, using conditions identical to those used for culture and extraction in the manufacturing process. Partly purified preparations of antigens, using some of the purification steps in the manufacturing process, may also be used for the preparation of antisera.
- *Calibration and standardisation.* Quantitative data are obtained by comparison with dose-response curves obtained using standard preparations of host-derived protein antigens. Since these preparations are mixtures of poorly defined proteins, a standard preparation is prepared and calibrated by a suitable protein determination method. This preparation is stored in a stable state suitable for use over an extended period of time.
- *Antisera.* Antisera contain high-avidity antibodies recognising as many different proteins in the antigen mixture as possible, and do not cross-react with the product.

Host-cell- and vector-derived DNA. Residual DNA is detected by hybridisation analysis, using suitably sensitive, sequence-independent analytical techniques or other suitably sensitive analytical techniques.

Hybridisation analysis

DNA in the test sample is denatured to give single-stranded DNA, immobilised on a nitrocellulose or other suitable filter and hybridised with labelled DNA prepared from the host-vector manufacturing system (DNA probes). Although a wide variety of experimental approaches is available, hybridisation methods for measurement of host-vector DNA meet the following criteria.

- *DNA probes.* Purified DNA is obtained from the host-vector system grown under the same conditions as those used in the manufacturing process. Host chromosomal DNA and vector DNA may be separately prepared and used as probes.
- *Calibration and standardisation.* Quantitative data are obtained by comparison with responses obtained using standard preparations. Chromosomal DNA probes and vector DNA probes are used with chromosomal DNA and vector DNA standards, respectively. Standard preparations are calibrated by spectroscopic measurements and stored in a state suitable for use over an extended period of time.
- *Hybridisation conditions.* The stringency of hybridisation conditions is such as to ensure specific hybridisation between probes and standard DNA preparations and the drug substances must not interfere with hybridisation at the concentrations used.

Sequence-independent techniques

Suitable procedures include: detection of sulfonated cytosine residues in single-stranded DNA (where DNA is immobilised on a filter and cytosines are derivatised *in situ*, before detection and quantitation using an antibody directed against the sulfonated group); detection of single-stranded DNA using a fragment of single-stranded DNA bound to a protein and an antibody of this protein. Neither procedure requires the use of specific host or vector DNA as an assay standard. However, the method used must be validated to ensure parallelism with the DNA standard used, linearity of response and non-interference of either the drug substance or excipients of the formulation at the dilutions used in the assay.

IDENTIFICATION, TESTS AND ASSAY

The requirements with which the final product (bulk material or dose form) must comply throughout its period of validity, as well as specific test methods, are stated in the individual monograph.

04/2013:2034
corrected 8.0

SUBSTANCES FOR PHARMACEUTICAL USE

Corpora ad usum pharmaceuticum

DEFINITION

Substances for pharmaceutical use are any organic or inorganic substances that are used as active substances or excipients for the production of medicinal products for human or veterinary use. They may be obtained from natural sources or produced by extraction from raw materials, fermentation or synthesis.

This general monograph does not apply to herbal drugs, herbal drugs for homoeopathic preparations, herbal drug preparations, extracts, or mother tinctures for homoeopathic preparations, which are the subject of separate general monographs (*Herbal drugs (1433)*, *Herbal drugs for homoeopathic preparations (2045)*, *Herbal drug preparations (1434)*, *Extracts (0765)*, *Mother tinctures for homoeopathic preparations (2029)*). It does not apply to raw materials for homoeopathic preparations, except where there is an individual monograph for the substance in the non-homoeopathic part of the Pharmacopoeia.

Where a substance for pharmaceutical use not described in an individual monograph of the Pharmacopoeia is used in a medicinal product prepared for the special needs of individual patients, the need for compliance with the present general monograph is decided in the light of a risk assessment that takes account of the available quality of the substance and its intended use.

Where medicinal products are manufactured using substances for pharmaceutical use of human or animal origin, the requirements of chapter *5.1.7. Viral safety* apply.

Substances for pharmaceutical use may be used as such or as starting materials for subsequent formulation to prepare medicinal products. Depending on the formulation, certain substances may be used either as active substances or as excipients. Solid substances may be compacted, coated, granulated, powdered to a certain fineness, or processed in other ways. A monograph is applicable to a substance processed with an excipient only where such processing is mentioned in the definition section of the monograph.

Substance for pharmaceutical use of special grade. Unless otherwise indicated or restricted in the individual monographs, a substance for pharmaceutical use is intended for human and veterinary use, and is of appropriate quality for the manufacture of all dosage forms in which it can be used.

Polymorphism. Individual monographs do not usually specify crystalline or amorphous forms, unless bioavailability is affected. All forms of a substance for pharmaceutical use comply with the requirements of the monograph, unless otherwise indicated.

PRODUCTION

Substances for pharmaceutical use are manufactured by procedures that are designed to ensure a consistent quality and comply with the requirements of the individual monograph or approved specification.

The manufacture of active substances must take place under conditions of good manufacturing practice.

The provisions of general chapter *5.10* apply to the control of impurities in substances for pharmaceutical use.

General monographs

Whether or not it is specifically stated in the individual monograph that the substance for pharmaceutical use:

- is a recombinant protein or another substance obtained as a direct gene product based on genetic modification, where applicable, the substance also complies with the requirements of the general monograph *Products of recombinant DNA technology (0784)*;
- is obtained from animals susceptible to transmissible spongiform encephalopathies other than by experimental challenge, where applicable, the substance also complies with the requirements of the general monograph *Products with risk of transmitting agents of animal spongiform encephalopathies (1483)*;
- is a substance derived from a fermentation process, whether or not the micro-organisms involved are modified by traditional procedures or recombinant DNA (rDNA) technology, where applicable, the substance also complies with the requirements of the general monograph *Products of fermentation (1468)*.

If solvents are used during production, they are of suitable quality. In addition, their toxicity and their residual level are taken into consideration (*5.4*). If water is used during production, it is of suitable quality.

If substances are produced or processed to yield a certain form or grade, that specific form or grade of the substance complies with the requirements of the monograph. Certain functionality-related tests may be described to control properties that may influence the suitability of the substance and subsequently the properties of dosage forms prepared from it.

Powdered substances may be processed to obtain a certain degree of fineness (*2.9.35*).

Compacted substances are processed to increase the particle size or to obtain particles of a specific form and/or to obtain a substance with a higher bulk density.

Coated active substances consist of particles of the active substance coated with one or more suitable excipients.

Granulated active substances are particles of a specified size and/or form produced from the active substance by granulation directly or with one or more suitable excipients.

If substances are processed with excipients, these excipients comply with the requirements of the relevant monograph or, where no such monograph exists, the approved specification.

Where active substances have been processed with excipients to produce, for example, coated or granulated substances, the processing is carried out under conditions of good manufacturing practice and the processed substances are regarded as intermediates in the manufacture of a medicinal product.

CHARACTERS

The statements under the heading Characters (e.g. statements about the solubility or a decomposition point) are not to be interpreted in a strict sense and are not requirements. They are given for information.

Where a substance may show polymorphism, this may be stated under Characters in order to draw this to the attention of the user who may have to take this characteristic into consideration during formulation of a preparation.

IDENTIFICATION

Where under Identification an individual monograph contains subdivisions entitled 'First identification' and 'Second identification', the test or tests that constitute the 'First identification' may be used in all circumstances. The test or tests that constitute the 'Second identification' may be used in pharmacies provided it can be demonstrated that the substance or preparation is fully traceable to a batch certified to comply with all the other requirements of the monograph.

Certain monographs give two or more sets of tests for the purpose of the first identification, which are equivalent and may be used independently. One or more of these sets usually contain a cross-reference to a test prescribed in the Tests section of the monograph. It may be used to simplify the work of the analyst carrying out the identification and the prescribed tests. For example, one identification set cross-refers to a test for enantiomeric purity while the other set gives a test for specific optical rotation: the intended purpose of the two is the same, that is, verification that the correct enantiomer is present.

TESTS

Polymorphism (*5.9*). If the nature of a crystalline or amorphous form imposes restrictions on its use in preparations, the nature of the specific crystalline or amorphous form is identified, its morphology is adequately controlled and its identity is stated on the label.

Related substances. Unless otherwise prescribed or justified and authorised, organic impurities in active substances are to be reported, identified wherever possible, and qualified as indicated in Table 2034.-1 or in Table 2034.-2 for peptides obtained by chemical synthesis.

Table 2034.-1. – *Reporting, identification and qualification of organic impurities in active substances*

Use	Maximum daily dose	Reporting threshold	Identification threshold	Qualification threshold
Human use or human and veterinary use	≤ 2 g/day	> 0.05 per cent	> 0.10 per cent or a daily intake of > 1.0 mg (whichever is the lower)	> 0.15 per cent or a daily intake of > 1.0 mg (whichever is the lower)
Human use or human and veterinary use	> 2 g/day	> 0.03 per cent	> 0.05 per cent	> 0.05 per cent
Veterinary use only	Not applicable	> 0.10 per cent	> 0.20 per cent	> 0.50 per cent

Table 2034.-2. – *Reporting, identification and qualification of organic impurities in peptides obtained by chemical synthesis*

Reporting threshold	Identification threshold	Qualification threshold
> 0.1 per cent	> 0.5 per cent	> 1.0 per cent

Specific thresholds may be applied for impurities known to be unusually potent or to produce toxic or unexpected pharmacological effects.

If the individual monograph does not provide suitable control for a new impurity, a suitable test for control must be developed and included in the specification for the substance.

The requirements above do not apply to biological and biotechnological products, oligonucleotides, radiopharmaceuticals, products of fermentation and semi-synthetic products derived therefrom, to crude products of animal or plant origin or herbal products.

For active substances in a new application for a medicinal product for human use, the requirements of the guideline on the limits of genotoxic impurities and the corresponding questions and answers documents published on the website of the European Medicines Agency (or similar evaluation principles for non-European Union member states) must be followed.

Residual solvents are limited according to the principles defined in chapter *5.4*, using general method *2.4.24* or another suitable method. Where a quantitative determination of a residual solvent is carried out and a test for loss on drying is

not carried out, the content of residual solvent is taken into account for calculation of the assay content of the substance, the specific optical rotation and the specific absorbance.

Microbiological quality. Individual monographs give acceptance criteria for microbiological quality wherever such control is necessary. Table 5.1.4.-2. – *Acceptance criteria for microbiological quality of non-sterile substances for pharmaceutical use* in chapter *5.1.4. Microbiological quality of non-sterile pharmaceutical preparations and substances for pharmaceutical use* gives recommendations on microbiological quality that are of general relevance for substances subject to microbial contamination. Depending on the nature of the substance and its intended use, different acceptance criteria may be justified.

Sterility (*2.6.1*). If intended for use in the manufacture of sterile dosage forms without a further appropriate sterilisation procedure, or if offered as sterile grade, the substance for pharmaceutical use complies with the test for sterility.

Bacterial endotoxins (*2.6.14*). If offered as bacterial endotoxin-free grade, the substance for pharmaceutical use complies with the test for bacterial endotoxins. The limit and test method (if not gelation method A) are stated in the individual monograph. The limit is calculated in accordance with the recommendations in general chapter *5.1.10. Guidelines for using the test for bacterial endotoxins*, unless a lower limit is justified from results from production batches or is required by the competent authority. Where a test for bacterial endotoxins is prescribed, a test for pyrogens is not required.

Pyrogens (*2.6.8*). If the test for pyrogens is justified rather than the test for bacterial endotoxins and if a pyrogen-free grade is offered, the substance for pharmaceutical use complies with the test for pyrogens. The limit and test method are stated in the individual monograph or approved by the competent authority. Based on appropriate test validation for bacterial endotoxins and pyrogens, the test for bacterial endotoxins may replace the test for pyrogens.

Additional properties. Control of additional properties (e.g. physical characteristics, functionality-related characteristics) may be necessary for individual manufacturing processes or formulations. Grades (such as sterile, endotoxin-free, pyrogen-free) may be produced with a view to manufacture of preparations for parenteral administration or other dosage forms and appropriate requirements may be specified in an individual monograph.

ASSAY

Unless justified and authorised, contents of substances for pharmaceutical use are determined. Suitable methods are used.

LABELLING

In general, labelling is subject to supranational and national regulation and to international agreements. The statements under the heading Labelling therefore are not comprehensive and, moreover, for the purposes of the Pharmacopoeia only those statements that are necessary to demonstrate compliance or non-compliance with the monograph are mandatory. Any other labelling statements are included as recommendations. When the term 'label' is used in the Pharmacopoeia, the labelling statements may appear on the container, the package, a leaflet accompanying the package or a certificate of analysis accompanying the article, as decided by the competent authority.

Where appropriate, the label states that the substance is:

- intended for a specific use;
- of a distinct crystalline form;
- of a specific degree of fineness;
- compacted;
- coated;
- granulated;
- sterile;
- free from bacterial endotoxins;
- free from pyrogens;
- containing gliding agents.

Where applicable, the label states:

- the degree of hydration;
- the name and concentration of any excipient.

01/2013:0153

VACCINES FOR HUMAN USE

Vaccina ad usum humanum

DEFINITION

Vaccines for human use are preparations containing antigens capable of inducing a specific and active immunity in man against an infecting agent or the toxin or antigen elaborated by it. Immune responses include the induction of the innate and the adaptive (cellular, humoral) parts of the immune system. Vaccines for human use shall have been shown to have acceptable immunogenic activity and safety in man with the intended vaccination schedule.

Vaccines for human use may contain: whole micro-organisms (bacteria, viruses or parasites), inactivated by chemical or physical means that maintain adequate immunogenic properties; whole live micro-organisms that are naturally avirulent or that have been treated to attenuate their virulence whilst retaining adequate immunogenic properties; antigens extracted from the micro-organisms or secreted by the micro-organisms or produced by genetic engineering or chemical synthesis. The antigens may be used in their native state or may be detoxified or otherwise modified by chemical or physical means and may be aggregated, polymerised or conjugated to a carrier to increase their immunogenicity. Vaccines may contain an adjuvant. Where the antigen is adsorbed on a mineral adjuvant, the vaccine is referred to as 'adsorbed'.

Terminology used in monographs on vaccines for human use is defined in chapter *5.2.1*.

Bacterial vaccines containing whole cells are suspensions of various degrees of opacity in colourless or almost colourless liquids, or may be freeze-dried. They may be adsorbed. The concentration of living or inactivated bacteria is expressed in terms of International Units of opacity or, where appropriate, is determined by direct cell count or, for live bacteria, by viable count.

Bacterial vaccines containing bacterial components are suspensions or freeze-dried products. They may be adsorbed. The antigen content is determined by a suitable validated assay.

Bacterial toxoids are prepared from toxins by diminishing their toxicity to an acceptable level or by completely eliminating it by physical or chemical procedures whilst retaining adequate immunogenic properties. The toxins are obtained from selected strains of micro-organisms. The method of production is such that the toxoid does not revert to toxin. The toxoids are purified. Purification is performed before and/or after detoxification. Toxoid vaccines may be adsorbed.

Viral vaccines are prepared from viruses grown in animals, in fertilised eggs, in suitable cell cultures or in suitable tissues, or by culture of genetically engineered cells. They are liquids that vary in opacity according to the type of preparation or may be freeze-dried. They may be adsorbed. Liquid preparations and freeze-dried preparations after reconstitution may be coloured if a pH indicator such as phenol red has been used in the culture medium.

Synthetic antigen vaccines are generally clear or colourless liquids. The concentration of the components is usually expressed in terms of specific antigen content.

General monographs

Combined vaccines are multicomponent preparations formulated so that different antigens are administered simultaneously. The different antigenic components are intended to protect against different strains or types of the same organism and/or against different organisms. A combined vaccine may be supplied by the manufacturer either as a single liquid or freeze-dried preparation or as several constituents with directions for admixture before use. Where there is no monograph to cover a particular combination, the vaccine complies with the monograph for each individual component, with any necessary modifications approved by the competent authority.

Adsorbed vaccines are suspensions and may form a sediment at the bottom of the container.

PRODUCTION

General provisions. The production method for a given product must have been shown to yield consistently batches comparable with the batch of proven clinical efficacy, immunogenicity and safety in man. Product specifications including in-process testing should be set. Specific requirements for production including in-process testing are included in individual monographs. Where justified and authorised, certain tests may be omitted where it can be demonstrated, for example by validation studies, that the production process consistently ensures compliance with the test.

Unless otherwise justified and authorised, vaccines are produced using a seed-lot system. The methods of preparation are designed to maintain adequate immunogenic properties, to render the preparation harmless and to prevent contamination with extraneous agents.

Where vaccines for human use are manufactured using materials of human or animal origin, the general requirements of chapter *5.1.7. Viral safety* apply in conjunction with the more specific requirements relating to viral safety in this monograph, in chapters *5.2.2. Chicken flocks free from specified pathogens for the production and quality control of vaccines*, *5.2.3. Cell substrates for the production of vaccines for human use* and *2.6.16. Tests for extraneous agents in viral vaccines for human use*, and in individual monographs.

Unless otherwise justified and authorised, in the production of a final lot of vaccine, the number of passages of a virus, or the number of subcultures of a bacterium, from the master seed lot shall not exceed that used for production of the vaccine shown to be satisfactory in clinical trials with respect to safety and efficacy or immunogenicity.

Vaccines are as far as possible free from ingredients known to cause toxic, allergic or other undesirable reactions in man. Suitable additives, including stabilisers and adjuvants may be incorporated. Penicillin and streptomycin are neither used at any stage of production nor added to the final product; however, master seed lots prepared with media containing penicillin or streptomycin may, where justified and authorised, be used for production.

Consistency of production is an important feature of vaccine production. Monographs on vaccines for human use give limits for various tests carried out during production and on the final lot. These limits may be in the form of maximum values, minimum values, or minimum and maximum tolerances around a given value. While compliance with these limits is required, it is not necessarily sufficient to ensure consistency of production for a given vaccine. For relevant tests, the manufacturer must therefore define for each product a suitable action or release limit or limits to be applied in view of the results found for batches tested clinically and those used to demonstrate consistency of production. These limits may subsequently be refined on a statistical basis in light of production data.

Substrates for propagation. Substrates for propagation comply with the relevant requirements of the Pharmacopoeia (*5.2.2*, *5.2.3*) or in the absence of such requirements with those of the competent authority. Processing of cell banks and subsequent cell cultures is done under aseptic conditions in an area where no other cells are being handled. Serum and trypsin used in the preparation of cell suspensions shall be shown to be free from extraneous agents.

Seed lots/cell banks. The master seed lot or cell bank is identified by historical records that include information on its origin and subsequent manipulation. Suitable measures are taken to ensure that no extraneous agent or undesirable substance is present in a master or working seed lot or a cell bank.

Culture media. Culture media are as far as possible free from ingredients known to cause toxic, allergic or other undesirable reactions in man; if inclusion of such ingredients is necessary, it shall be demonstrated that the amount present in the final lot is reduced to such a level as to render the product safe. Approved animal (but not human) serum may be used in the growth medium for cell cultures but the medium used for maintaining cell growth during virus multiplication shall not contain serum, unless otherwise stated. Cell culture media may contain a pH indicator such as phenol red and approved antibiotics at the lowest effective concentration, although it is preferable to have a medium free from antibiotics during production.

Propagation and harvest. The seed cultures are propagated and harvested under defined conditions. The purity of the harvest is verified by suitable tests as defined in the monograph.

Control cells. For vaccines produced in cell cultures, control cells are maintained and tested as prescribed. In order to provide a valid control, these cells must be maintained in conditions that are essentially equivalent to those used for the production cell cultures, including use of the same batches of media and media changes.

Control eggs. For live vaccines produced in eggs, control eggs are incubated and tested as prescribed in the monograph.

Purification. Where applicable, validated purification procedures may be applied.

Inactivation. Inactivated vaccines are produced using a validated inactivation process whose effectiveness and consistency have been demonstrated. Where it is recognised that extraneous agents may be present in a harvest, for example in vaccines produced in eggs from healthy, non-SPF flocks, the inactivation process is also validated with respect to a panel of model extraneous agents representative of the potential extraneous agents. A test for effectiveness of the inactivation process is carried out as soon as possible after the inactivation process.

Test for sterility of intermediates prior to final bulk. Individual monographs on vaccines for human use may prescribe a test for sterility for intermediates.

In agreement with the competent authority, replacement of the sterility test by a bioburden test with a low bioburden limit based on batch data and process validation may be acceptable for intermediates preceding the final bulk, provided that a sterilising filtration is performed later in the production process.

It is a prerequisite that the intermediate is filtered through a bacteria-retentive filter prior to storage, that authorised pre-filtration bioburden limits have been established for this filtration, and that adequate measures are in place to avoid contamination and growth of micro-organisms during storage of the intermediate.

Final bulk. The final bulk is prepared by aseptically blending the ingredients of the vaccine. For non-liquid vaccines for administration by a non-parenteral route, the final bulk is prepared by blending the ingredients of the vaccine under suitable conditions.

Adjuvants. One or more adjuvants may be included in the formulation of a vaccine to potentiate and/or modulate the immune response to the antigen(s). Adjuvants may be included in the formulation of the final vaccine or presented separately. Suitable characterisation and quality control of the adjuvant(s), alone and in combination with the antigen(s), is essential for consistent production. Quality specifications are established for each adjuvant, alone and in combination with the antigen(s).

Adsorbents as adjuvants. Vaccines may be adsorbed on aluminium hydroxide, aluminium phosphate, calcium phosphate or other suitable adsorbents. The adsorbents are prepared in special conditions that confer the appropriate physical form and adsorptive properties.

Where an adsorbent is used as an adjuvant and is generated *in situ* during production of the vaccine, quality specifications are established for each of the ingredients and for the generated adsorbent in the vaccine. Quality specifications are intended to control, in particular:

- qualitative and quantitative chemical composition;
- physical form and associated adsorptive properties, where relevant, and particularly where the adjuvant will be present as an adsorbent;
- interaction between adjuvant and antigen;
- purity, including bacterial endotoxin content and microbiological quality;
- any other parameters identified as being critical for functionality.

The stability of each adjuvant, alone and in combination with the antigen(s), particularly for critical parameters, is established during development studies.

Antimicrobial preservatives. Antimicrobial preservatives are used to prevent spoilage or adverse effects caused by microbial contamination occurring during the use of a vaccine. Antimicrobial preservatives are not included in freeze-dried products. For single-dose liquid preparations, inclusion of antimicrobial preservatives is not normally acceptable. For multidose liquid preparations, the need for effective antimicrobial preservation is evaluated taking into account likely contamination during use and the maximum recommended period of use after broaching of the container. If an antimicrobial preservative is used, it shall be shown that it does not impair the safety or efficacy of the vaccine. Addition of antibiotics as antimicrobial preservatives is not normally acceptable.

During development studies, the effectiveness of the antimicrobial preservative throughout the period of validity shall be demonstrated to the satisfaction of the competent authority.

The efficacy of the antimicrobial preservative is evaluated as described in chapter *5.1.3*. If neither the A criteria nor the B criteria can be met, then in justified cases the following criteria are applied to vaccines for human use: bacteria, no increase at 24 h and 7 days, 3 $\log_{10}$ reduction at 14 days, no increase at 28 days; fungi, no increase at 14 days and 28 days.

Stability of intermediates. During production of vaccines, intermediates are obtained at various stages and are stored, sometimes for long periods. Such intermediates include:

- seed lots and cell banks;
- live or inactivated harvests;
- purified harvests that may consist of toxins or toxoids, polysaccharides, bacterial or viral suspensions;
- purified antigens;
- adsorbed antigens;
- conjugated polysaccharides;
- final bulk vaccine;
- vaccine in the final closed container stored at a temperature lower than that used for final-product stability studies and intended for release without re-assay.

Except where they are used within a short period of time, stability studies are carried out on the intermediates in the intended storage conditions to establish the expected extent of degradation. For final bulk vaccine, stability studies may be carried out on representative samples in conditions equivalent to those intended to be used for storage. For each intermediate (except for seed lots and cell banks), a period of validity applicable for the intended storage conditions is established, where appropriate in light of stability studies.

Final lot. The final lot is prepared by aseptically distributing the final bulk into sterile, tamper-proof containers, which, after freeze-drying where applicable, are closed so as to exclude contamination. For non-liquid vaccines for administration by a non-parenteral route, the final lot is prepared by distributing the final bulk under suitable conditions into sterile, tamper-proof containers. Where justified and authorised, certain tests prescribed for the final lot may be carried out on the final bulk, if it has been demonstrated that subsequent manufacturing operations do not affect compliance.

Appearance. Unless otherwise justified and authorised, each container (vial, syringe or ampoule) in each final lot is inspected visually or mechanically for acceptable appearance.

Degree of adsorption. For an adsorbed vaccine, unless otherwise justified and authorised, a release specification for the degree of adsorption is established in light of results found for batches used in clinical trials. From the stability data generated for the vaccine it must be shown that at the end of the period of validity the degree of adsorption is not less than for batches used in clinical trials.

Thermal stability. When the thermal stability test is prescribed in a monograph for a live attenuated vaccine, the test is carried out on the final lot to monitor the lot-to-lot consistency in heat-sensitivity of viral/bacterial particles in the product. Suitable conditions are indicated in the individual monograph. The test may be omitted as a routine test for a given product once the consistency of the production process has been demonstrated, in agreement with the competent authority, using relevant parameters, such as consistency in yield, ratio of infectious viruses (viable bacteria) before and after freeze-drying, potency at release and real-time stability under the prescribed conditions as well as thermal stability. Where there is a significant change in the manufacturing procedure of the antigen(s) or formulation, the need for re-introduction of the test is considered.

Stability. During development studies, maintenance of potency of the final lot throughout the period of validity shall be demonstrated; the loss of potency in the recommended storage conditions is assessed. Excessive loss even within the limits of acceptable potency may indicate that the vaccine is unacceptable.

Expiry date. Unless otherwise stated, the expiry date is calculated from the beginning of the assay or from the beginning of the first assay for a combined vaccine. For vaccines stored at a temperature lower than that used for stability studies and intended for release without re-assay, the expiry date is calculated from the date of removal from cold storage. If, for a given vaccine, an assay is not carried out, the expiry date for the final lot is calculated from the date of an approved stability-indicating test or, failing this, from the date of freeze-drying or the date of filling into the final containers. For a combined vaccine where components are presented in separate containers, the expiry date is that of the component which expires first.

The expiry date applies to vaccines stored in the prescribed conditions.

Animal tests. In accordance with the provisions of the European Convention for the Protection of Vertebrate Animals Used for Experimental and Other Scientific Purposes, tests must be carried out in such a way as to use the minimum number of animals and to cause the least pain, suffering, distress or lasting harm. The criteria for judging tests in monographs must be applied in light of this. For example, if it is indicated that an animal is considered to be positive, infected, etc. when typical clinical signs or death occur, then as soon as sufficient indication of a positive result is obtained the animal in question shall be either euthanised or given suitable treatment to prevent unnecessary suffering. In accordance with the General Notices, alternative test methods may be used to demonstrate compliance with the monograph and the use of such tests is particularly encouraged when this leads to replacement or reduction of animal use or reduction of suffering.

TESTS

Vaccines comply with the tests prescribed in individual monographs including, where applicable, the following:

pH (*2.2.3*). Liquid vaccines, after reconstitution where applicable, comply with the limits for pH approved for the particular preparation.

Adjuvant. If the vaccine contains an adjuvant, the amount is determined and shown to be within acceptable limits with respect to the expected amount (see also the tests for aluminium and calcium below).

Aluminium (*2.5.13*): maximum 1.25 mg of aluminium (Al) per single human dose where an aluminium adsorbent has been used in the vaccine, unless otherwise stated.

Calcium (*2.5.14*): maximum 1.3 mg of calcium (Ca) per single human dose where a calcium adsorbent has been used in the vaccine, unless otherwise stated.

Free formaldehyde (*2.4.18*): maximum 0.2 g/L of free formaldehyde in the final product where formaldehyde has been used in the preparation of the vaccine, unless otherwise stated.

Phenol (*2.5.15*): maximum 2.5 g/L in the final product where phenol has been used in the preparation of the vaccine, unless otherwise stated.

Water (*2.5.12*): maximum 3.0 per cent *m/m* for freeze-dried vaccines, unless otherwise stated.

Extractable volume (*2.9.17*). Unless otherwise justified and authorised, it complies with the requirement for extractable volume.

Bacterial endotoxins. Unless otherwise justified and authorised, a test for bacterial endotoxins is carried out on the final product. Where no limit is specified in the individual monograph, the content of bacterial endotoxins determined by a suitable method (*2.6.14*) is less than the limit approved for the particular product.

STORAGE

Store protected from light. Unless otherwise stated, the storage temperature is 5 ± 3 °C; liquid adsorbed vaccines must not be allowed to freeze.

LABELLING

The label states:

- the name of the preparation;
- a reference identifying the final lot;
- the recommended human dose and route of administration;
- the storage conditions;
- the expiry date;
- the name and amount of any antimicrobial preservative;
- the name of any antibiotic, adjuvant, flavour or stabiliser present in the vaccine;
- where applicable, that the vaccine is adsorbed;
- the name of any constituent that may cause adverse reactions and any contra-indications to the use of the vaccine;
- for freeze-dried vaccines:
  - the name or composition and the volume of the reconstituting liquid to be added;
  - the time within which the vaccine is to be used after reconstitution.

04/2013:0062

VACCINES FOR VETERINARY USE

Vaccina ad usum veterinarium

*In the case of combined vaccines, for each component that is the subject of a monograph in the Pharmacopoeia, the provisions of that monograph apply to that component, modified where necessary as indicated (see chapters 5.2.6. Evaluation of safety of veterinary vaccines and immunosera and 5.2.7. Evaluation of efficacy of veterinary vaccines and immunosera).*If an immunological product for veterinary use is intended for minor use, certain tests may be excluded, subject to approval by the competent authority[(1)].

1. DEFINITION

Vaccines for veterinary use are preparations containing antigenic substances and are administered for the purpose of inducing a specific and active immunity against disease provoked by bacteria, toxins, viruses, fungi or parasites. The vaccines, live or inactivated, confer active immunity that may be transferred passively via maternal antibodies against the immunogens they contain and sometimes also against antigenically related organisms. Vaccines may contain bacteria, toxins, viruses or fungi, living or inactivated, parasites, or antigenic fractions or substances produced by these organisms and rendered harmless whilst retaining all or part of their antigenic properties; vaccines may also contain combinations of these constituents. The antigens may be produced by recombinant DNA technology. Suitable adjuvants may be included to enhance the immunising properties of the vaccines.

Terminology used in monographs on vaccines for veterinary use is defined in chapter *5.2.1*.

1-1. *BACTERIAL VACCINES AND BACTERIAL TOXOIDS*

Bacterial vaccines and bacterial toxoids are prepared from cultures grown on suitable solid or liquid media, or by other suitable means; the requirements of this section do not apply to bacterial vaccines prepared in cell cultures or in live animals. The strain of bacterium used may have been modified by genetic engineering. The identity, antigenic potency and purity of each bacterial culture used is carefully controlled.

Bacterial vaccines contain inactivated or live bacteria or their antigenic components; they are liquid preparations of various degrees of opacity or they may be freeze-dried.

Bacterial toxoids are prepared from toxins by diminishing their toxicity to a very low level or by completely eliminating it by physical or chemical means whilst retaining adequate immunising potency. The toxins are obtained from selected strains of specified micro-organisms grown in suitable media or are obtained by other suitable means, for example, chemical synthesis.

The toxoids may be:

- liquid;

(1) NOTE: Guideline on data requirements for immunological veterinary medicinal products intended for minor use or minor species/limited markets (EMA/CVMP/IWP/123243/2006, including any subsequent revision of this document).

- precipitated with alum or another suitable agent;
- purified and/or adsorbed on aluminium phosphate, aluminium hydroxide, calcium phosphate or another adsorbent prescribed in the monograph.

Bacterial toxoids are clear or slightly opalescent liquids. Adsorbed toxoids are suspensions or emulsions. Certain toxoids may be freeze-dried.

Unless otherwise indicated, statements and requirements given below for bacterial vaccines apply equally to bacterial vaccines, bacterial toxoids and products containing a combination of bacterial cells and toxoid.

1-2. *VIRAL VACCINES*

Viral vaccines are prepared by growth in suitable cell cultures (*5.2.4*), in tissues, in micro-organisms, in fertilised eggs or, where no other possibility is available, in live animals, or by other suitable means. The strain of virus used may have been modified by genetic engineering. They are liquid or freeze-dried preparations of one or more viruses or viral subunits or peptides.

Live viral vaccines are prepared from viruses of attenuated virulence or of natural low virulence for the target species.

Inactivated viral vaccines are treated by a validated procedure for inactivation of the virus and may be purified and concentrated.

1-3. *VECTOR VACCINES*

Vector vaccines are liquid or freeze-dried preparations of one or more types of live micro-organisms (bacteria or viruses) that are non-pathogenic or have low pathogenicity for the target species and in which have been inserted one or more genes encoding antigens that stimulate an immune response protective against other micro-organisms.

2. PRODUCTION

2-1. *PREPARATION OF THE VACCINE*

The methods of preparation, which vary according to the type of vaccine, are such as to maintain the identity and immunogenicity of the antigen and to ensure freedom from contamination with extraneous agents.

Substances of animal origin used in the production of vaccines for veterinary use comply with the requirements of chapter *5.2.5*. Other substances used in the preparation of vaccines for veterinary use comply with requirements of the Pharmacopoeia (where a relevant monograph exists) and are prepared in a manner that avoids contamination of the vaccine.

2-1-1. **Substrates for production**. Cell cultures used in the production of vaccines for veterinary use comply with the requirements of chapter *5.2.4*.

Where a monograph refers to chicken flocks free from specified pathogens (SPF), these flocks comply with the requirements prescribed in chapter *5.2.2*.

For production of inactivated vaccines, where vaccine organisms are grown in poultry embryos, such embryos are derived either from SPF flocks (*5.2.2*) or from healthy non-SPF flocks free from the presence of certain agents and their antibodies, as specified in the monograph. It may be necessary to demonstrate that the inactivation process is effective against specified potential contaminants. For the production of a master seed lot and for all passages of a micro-organism up to and including the working seed lot, eggs from SPF flocks (*5.2.2*) are used.

Where it is unavoidable to use animals or animal tissues in the production of veterinary vaccines, such animals shall be free from specified pathogens, as appropriate to the source species and the target animal for the vaccine.

2-1-2. **Media used for seed culture preparation and for production**. At least the qualitative composition must be recorded of media used for seed culture preparation and for production. The grade of each named ingredient is specified. Where media or ingredients are claimed as proprietary, this is indicated and an appropriate description recorded. Ingredients that are derived from animals are specified as to the source species and country of origin, and must comply with the criteria described in chapter *5.2.5*. Preparation processes for media used, including sterilisation procedures, are documented.

The addition of antibiotics during the manufacturing process is normally restricted to cell culture fluids and other media, egg inocula and material harvested from skin or other tissues.

2-1-3. **Seed lots**

2-1-3-1. *Bacterial seed lots*

2-1-3-1-1. General requirements. The genus and species (and varieties where appropriate) of the bacteria used in the vaccine are stated. Bacteria used in manufacture are handled in a seed-lot system wherever possible. Each master seed lot is tested as described below. A record of the origin, date of isolation, passage history (including purification and characterisation procedures) and storage conditions is maintained for each master seed lot. Each master seed lot is assigned a specific code for identification purposes.

2-1-3-1-2. Propagation. The minimum and maximum number of subcultures of each master seed lot prior to the production stage are specified. The methods used for the preparation of seed cultures, preparation of suspensions for seeding, techniques for inoculation of seeds, titre and concentration of inocula and the media used, are documented. It shall be demonstrated that the characteristics of the seed material (for example, dissociation or antigenicity) are not changed by these subcultures. The conditions under which each seed lot is stored are documented.

2-1-3-1-3. Identity and purity. Each master seed lot is shown to contain only the species and strain of bacterium stated. A brief description of the method of identifying each strain by biochemical, serological and morphological characteristics and distinguishing it as far as possible from related strains is recorded, as is also the method of determining the purity of the strain. If the master seed lot is shown to contain living organisms of any kind other than the species and strain stated, then it is unsuitable for vaccine production.

2-1-3-2. *Virus seed lots*

2-1-3-2-1. General requirements. Viruses used in manufacture are handled in a seed-lot system. Each master seed lot is tested as described below. A record of the origin, date of isolation, passage history (including purification and characterisation procedures) and storage conditions is maintained for each seed lot. Each master seed lot is assigned a specific code for identification purposes. Production of vaccine is not normally undertaken using virus more than 5 passages from the master seed lot. In the tests on the master seed lot described below, the organisms used are not normally more than 5 passages from the master seed lot at the start of the tests, unless otherwise indicated.

Where the master seed lot is contained within a permanently infected master cell seed, the following tests are carried out on an appropriate volume of virus from disrupted master cell seed. Where relevant tests have been carried out on disrupted cells to validate the suitability of the master cell seed, these tests need not be repeated.

2-1-3-2-2. Propagation. The master seed lot and all subsequent passages are propagated on cells, on embryonated eggs or in animals that have been shown to be suitable for vaccine production (see above), and, where applicable, using substances of animal origin that meet the requirements prescribed in chapter *5.2.5*.

2-1-3-2-3. Identification. A suitable method to identify the vaccine strain and to distinguish it as far as possible from related strains must be used.

2-1-3-2-4. Bacteria and fungi. The master seed lot complies with the test for sterility (*2.6.1*).

2-1-3-2-5. Mycoplasmas (*2.6.7*). The master seed lot complies with the test for mycoplasmas (culture method and indicator cell culture method).

2-1-3-2-6. Absence of extraneous viruses. Monographs may contain requirements for freedom from extraneous agents, otherwise the requirements stated below apply.

Preparations of monoclonal or polyclonal antibodies containing high levels of neutralising antibody to the virus of the seed lot are made on a batch basis, using antigen that is not derived from any passage level of the virus isolate giving rise to the master seed virus. Each batch of serum is maintained at 56 °C for 30 min to inactivate complement. Each batch is shown to be free of antibodies to potential contaminants of the seed virus and is shown to be free of any non-specific inhibiting effects on the ability of viruses to infect and propagate within cells (or eggs, where applicable). If such a serum cannot be obtained, other methods are used to remove or neutralise the seed virus specifically.

If the seed lot virus would interfere with the conduct and sensitivity of a test for extraneous viruses, a sample of the master seed lot is treated with a minimum amount of the monoclonal or polyclonal antibody so that the vaccine virus is neutralised as far as possible or removed. The final virus-serum mixture shall, if possible, contain at least the virus content of 10 doses of vaccine per 0.1 mL for avian vaccines and per millilitre for other vaccines. For avian vaccines, the testing to be carried out on seed lots is given in chapter *2.6.24*. For mammalian vaccines, the seed lot or the mixture of seed lot and antiserum is tested for freedom from extraneous agents as follows.

The mixture is inoculated onto cultures of at least 70 cm^2 of the required cell types. The cultures may be inoculated at any suitable stage of growth up to 70 per cent confluency. At least 1 monolayer of each type must be retained as a control. The cultures must be monitored daily for a week. At the end of this period the cultures are freeze thawed 3 times, centrifuged to remove cell debris and re-inoculated onto the same cell type as above. This is repeated twice. The final passage must produce sufficient cells in appropriate vessels to carry out the tests below.

Cytopathic and haemadsorbing agents are tested for using the methods described in the relevant sections on testing cell cultures (*5.2.4*) and techniques such as immunofluorescence are used for detection of specific contaminants for the tests in cell cultures. The master seed lot is inoculated onto:

- primary cells of the species of origin of the virus;
- cells sensitive to viruses pathogenic for the species for which the vaccine is intended;
- cells sensitive to pestiviruses.

If the master seed lot is shown to contain living organisms of any kind, other than the virus of the species and strain stated, or foreign viral antigens, then it is unsuitable for vaccine production.

2-1-4. **Inactivation**. Inactivated vaccines are subjected to a validated inactivation procedure. The testing of the inactivation kinetics described below is carried out once for a given production process. The rest of this section applies to each production run. When conducting tests for inactivation, it is essential to take account of the possibility that under the conditions of manufacture, organisms may be physically protected from inactivant.

2-1-4-1. *Inactivation kinetics*. The inactivating agent and the inactivation procedure shall be shown, under conditions of manufacture, to inactivate the vaccine micro-organism. Adequate data on inactivation kinetics shall be obtained. Normally, the time required for inactivation shall be not more than 67 per cent of the duration of the inactivation process.

2-1-4-2. *Aziridine*. If an aziridine compound is used as the inactivating agent then it shall be shown that no inactivating agent remains at the end of the inactivation procedure. This may be accomplished by neutralising the inactivating agent with thiosulfate and demonstrating residual thiosulfate in the inactivated harvest at the completion of the inactivation procedure.

2-1-4-3. *Formaldehyde*. If formaldehyde is used as the inactivating agent, then a test for free formaldehyde is carried out as prescribed under Tests.

2-1-4-4. *Other inactivating agents*. When other inactivation methods are used, appropriate tests are carried out to demonstrate that the inactivating agent has been removed or reduced to an acceptable residual level.

2-1-4-5. *Residual live virus/bacteria and/or detoxification testing*. A test for complete inactivation and/or detoxification is performed immediately after the inactivation and/or detoxification procedure and, if applicable, the neutralisation or removal of the inactivating or detoxifying agent.

2-1-4-5-1. Bacterial vaccines. The test selected shall be appropriate to the vaccine bacteria being used and shall consist of at least 2 passages in production medium or, if solid medium has been used for production, in a suitable liquid medium or in the medium prescribed in the monograph. The product complies with the test if no evidence of any live micro-organism is observed.

2-1-4-5-2. Bacterial toxoids. The test selected shall be appropriate to the toxin or toxins present and shall be the most sensitive available.

2-1-4-5-3. Viral vaccines. The test selected shall be appropriate to the vaccine virus being used and must consist of at least 2 passages in cells, embryonated eggs or, where no other suitably sensitive method is available, in animals. The quantity of cell samples, eggs or animals shall be sufficient to ensure appropriate sensitivity of the test. For tests in cell cultures, not less than 150 cm^2 of cell culture monolayer is inoculated with 1.0 mL of inactivated harvest. The product complies with the test if no evidence of the presence of any live virus or other micro-organism is observed.

The final bulk vaccine is prepared by combining one or more batches of antigen that comply with all the relevant requirements with any auxiliary substances, such as adjuvants, stabilisers, antimicrobial preservatives and diluents.

2-2. *CHOICE OF VACCINE COMPOSITION AND CHOICE OF VACCINE STRAIN*

For the choice of vaccine composition and choice of vaccine strain, important aspects to be evaluated include safety, efficacy and stability. General requirements for evaluation of safety and efficacy are given in chapter *5.2.6* and chapter *5.2.7*. These requirements may be made more explicit or supplemented by the requirements of specific monographs.

For live vaccines, a maximum virus titre or bacterial count acceptable from the point of view of safety is established during development studies. This is then used as the maximum acceptable titre for each batch of vaccine at release.

2-2-1. **Potency and immunogenicity**. The tests given under the headings Potency and Immunogenicity in monographs serve 2 purposes:

- the Potency section establishes, by a well-controlled test in experimental conditions, the minimum acceptable vaccinating capacity for all vaccines within the scope of the definition, which must be guaranteed throughout the period of validity;
- well-controlled experimental studies are normally a part of the overall demonstration of efficacy of a vaccine (see chapter *5.2.7*); the test referred to in the section Immunogenicity (to which the section Potency usually cross-refers) is suitable as a part of this testing.

2-2-2. **Route of administration**. During development of a vaccine, safety and immunogenicity are demonstrated for each route of administration to be recommended. The following is a non-exhaustive list of such routes of administration:

- intramuscular;
- subcutaneous;
- intravenous;
- ocular;
- oral;
- nasal;
- foot-stab;
- wing web;
- intradermal;
- intraperitoneal;
- *in ovo*.

2-2-3. **Methods of administration**. During development of a vaccine, safety and immunogenicity are demonstrated for each method of administration to be recommended. The following is a non-exhaustive list of such methods of administration:

- injection;
- drinking water;
- spray;
- eye-drop;
- scarification;
- implantation;
- immersion.

2-2-4. **Categories of animal**. Monographs may indicate that a given test is to be carried out for each category of animal of the target species for which the product is recommended or is to be recommended. The following is a non-exhaustive list of categories that are to be taken into account.

- *Mammals*:
  - pregnant animals/non-pregnant animals;
  - animals raised primarily for breeding/animals raised primarily for food production;
  - animals of the minimum age or size recommended for vaccination.
- *Avian species*:
  - birds raised primarily for egg production/birds raised primarily for production of meat;
  - birds before point of lay/birds after onset of lay.
- *Fish*:
  - broodstock fish/fish raised primarily for food production.

2-2-5. **Antimicrobial preservatives**. Antimicrobial preservatives are used to prevent spoilage or adverse effects caused by microbial contamination occurring during use of a vaccine which is expected to be no longer than 10 h after first broaching. Antimicrobial preservatives are not included in freeze-dried products but, if justified, taking into account the maximum recommended period of use after reconstitution, they may be included in the diluent for multi-dose freeze-dried products. For single-dose liquid preparations, inclusion of antimicrobial preservatives is not acceptable unless justified and authorised, but may be acceptable, for example where the same vaccine is filled in single-dose and multidose containers and is used in non-food-producing species. For multidose liquid preparations, the need for effective antimicrobial preservation is evaluated taking into account likely contamination during use and the maximum recommended period of use after broaching of the container.

During development studies the effectiveness of the antimicrobial preservative throughout the period of validity shall be demonstrated to the satisfaction of the competent authority.

The efficacy of the antimicrobial preservative is evaluated as described in chapter *5.1.3* and in addition samples are tested at suitable intervals over the proposed in-use shelf-life. If neither the A criteria nor the B criteria can be met, then in justified cases the following criteria are applied to vaccines for veterinary use: bacteria, no increase from 24 h to 7 days, 3 $\log_{10}$ reduction at 14 days, no increase at 28 days; fungi, no increase at 14 days and 28 days.

Addition of antibiotics as antimicrobial preservative is generally not acceptable.

2-2-6. **Stability**. Evidence of stability is obtained to justify the proposed period of validity. This evidence takes the form of the results of virus titrations, bacterial counts or potency tests carried out at regular intervals until 3 months beyond the end of the shelf life on not fewer than 3 representative consecutive batches of vaccine kept under recommended storage conditions together with results from studies of moisture content (for freeze-dried products), physical tests on the adjuvant, chemical tests on substances such as the adjuvant constituents and preservatives, and pH, as appropriate.

Where applicable, studies on the stability of the reconstituted vaccine are carried out, using the product reconstituted in accordance with the proposed recommendations.

2-3. *MANUFACTURER'S TESTS*

Certain tests may be carried out on the final bulk vaccine rather than on the batch or batches prepared from it; such tests include those for antimicrobial preservatives, free formaldehyde and the potency determination for inactivated vaccines.

2-3-1. **Residual live virus/bacteria and/or detoxification testing**. For inactivated vaccines, where the auxiliary substances would interfere with a test for inactivation and/or detoxification, a test for inactivation or detoxification is carried out during preparation of the final bulk, after the different batches of antigen have been combined but before addition of auxiliary substances; the test for inactivation or detoxification may then be omitted on the final bulk and the batch.

Where there is a risk of reversion to toxicity, the test for detoxification performed at the latest stage of the production process at which the sensitivity of the test is not compromised (e.g. after the different batches of antigen have been combined but before the addition of auxiliary substances) is important to demonstrate a lack of reversion to toxicity.

2-3-2. **Batch potency test**. For most vaccines, the tests cited under Potency or Immunogenicity are not suitable for the routine testing of batches.

For live vaccines, the minimum acceptable virus titre or bacterial count that gives satisfactory results in the potency test and other efficacy studies is established during development. For routine testing it must be demonstrated for each batch that the titre or count at release is such that at the end of the period of validity, in the light of stability studies, the vaccine, stored in the recommended conditions, will contain not less than the minimum acceptable virus titre or bacterial count determined during development studies.

For inactivated vaccines, if the test described under Potency is not used for routine testing, a batch potency test is established during development. The aim of the batch potency test is to ensure that each batch of vaccine would, if tested, comply with the test described under Potency and Immunogenicity. The acceptance criteria for the batch potency test are therefore established by correlation with the test described under Potency. Where a batch potency test is described in a monograph, this is given as an example of a test that is considered suitable, after establishment of correlation with the potency test; other test models can also be used.

2-3-3. **Batch**. Unless otherwise prescribed in the monograph or otherwise justified and authorised, the final bulk vaccine is distributed aseptically into sterile, tamper-proof containers, with or without freeze-drying, which are then closed so as to exclude contamination.

Only a batch that complies with each of the requirements given below under 3. Batch tests or in the relevant individual monograph may be released for use. With the agreement of the competent authority, certain of the batch tests may be omitted where in-process tests give an equal or better guarantee that the batch would comply or where alternative tests validated with respect to the Pharmacopoeia method have been carried out. Under particular circumstances (i.e. significant changes to the manufacturing process, as well as reports of unexpected adverse reactions observed in the field or reports that the final batches do not comply with the former data provided during licensing), other tests, including tests on animals, may be needed on an *ad hoc* basis; they are carried out in agreement with or at the request of the competent authority. For safety testing, one or more of the tests described in chapter *5.2.6* may be carried out.

The identification test can often be conveniently combined with the batch potency test to avoid the unnecessary use of animals. For a given vaccine, a validated *in vitro* test can be used to avoid the unnecessary use of animals.

2-3-3-1. *Animal tests*. In accordance with the provisions of the European Convention for the Protection of Vertebrate Animals Used for Experimental and Other Scientific Purposes, tests must be carried out in such a way as to use the minimum number of animals and to cause the least pain, suffering, distress or lasting harm. The criteria for judging tests in monographs must be applied in light of this. For example, if it is indicated that an animal is considered to be positive, infected etc. when typical clinical signs occur then as soon as it is clear that result will not be affected the animal in question shall be either euthanised or given suitable treatment to prevent unnecessary suffering. In accordance with the General Notices, alternative test methods may be used to demonstrate compliance with the monograph and the use of such tests is particularly encouraged when this leads to replacement or reduction of animal use or reduction of suffering.

2-3-3-2. *Physical tests*. A vaccine with an oily adjuvant is tested for viscosity by a suitable method and shown to be within the limits set for the product. The stability of the emulsion shall be demonstrated.

2-3-3-3. *Chemical tests*. Tests for the concentrations of appropriate substances such as aluminium and preservatives are carried out to show that these are within the limits set for the product.

2-3-3-4. *pH*. The pH of liquid products and diluents is measured and shown to be within the limits set for the product.

2-3-3-5. *Water*. Where applicable, the freeze-drying process is checked by a determination of water and shown to be within the limits set for the product.

3. BATCH TESTS

The monographs also indicate tests to be carried out on each particular vaccine.

All hen eggs, chickens and chicken cell cultures for use in quality control tests shall be derived from an SPF flock (*5.2.2*).

3-1. **Identification**. For inactivated vaccines, the identification prescribed in monographs is usually an antibody induction test since this is applicable to all vaccines.

3-2. **Formaldehyde** (*2.4.18*; use Method B if sodium metabisulfite has been used to neutralise excess formaldehyde). Where formaldehyde has been used in the preparation, the concentration of free formaldehyde is not greater than 0.5 g/L, unless a higher amount has been shown to be safe.

3-3. **Phenol** (*2.5.15*). When the vaccine contains phenol, the concentration is not greater than 5 g/L.

3-4. **Sterility** (*2.6.1*). Vaccines comply with the test for sterility. Where the volume of liquid in a container is greater than 100 mL, the method of membrane filtration is used wherever possible. Where the method of membrane filtration cannot be used, the method of direct inoculation may be used. Where the volume of liquid in each container is at least 20 mL, the minimum volume to be used for each culture medium is 10 per cent of the contents or 5 mL, whichever is less. The appropriate number of items to be tested (*2.6.1*) is 1 per cent of the batch with a minimum of 4 and a maximum of 10.

For live bacterial and for live fungal vaccines, the absence of micro-organisms other than the vaccine strain is demonstrated by suitable methods such as microscopic examination and inoculation of suitable media.

For frozen or freeze-dried avian live viral vaccines produced in embryonated eggs, for non-parenteral use only, the requirement for sterility is usually replaced by requirements for absence of pathogenic micro-organisms and for a maximum of 1 non-pathogenic micro-organism per dose.

3-5. **Extraneous agents**. Monographs prescribe a set of measures that, taken together, give an acceptable degree of assurance that the final product does not contain infectious extraneous agents. These measures include:

1) production within a seed-lot system and a cell-seed system, wherever possible;

2) extensive testing of seed lots and cell seed for extraneous agents;

3) requirements for SPF flocks used for providing substrates for vaccine production;

4) testing of substances of animal origin, which must, wherever possible, undergo an inactivation procedure;

5) for live vaccines, testing of the final product for infectious extraneous agents; such tests are less extensive than those carried out at earlier stages because of the guarantees given by in-process testing.

In case of doubt, the tests intended for the seed lot of a live vaccine may also be applied to the final product. If an extraneous agent is found in such a test, the vaccine does not comply with the monograph.

Avian live viral vaccines comply with the tests for extraneous agents in batches of finished product (*2.6.25*).

3-6. **Mycoplasmas** (*2.6.7*). Live viral vaccines comply with the test for mycoplasmas (culture method).

3-7. **Potency**. The vaccine complies with the requirements of the test mentioned under Immunogenicity (section 2-2-1) when administered by a recommended route and method.

Expiry date. Unless otherwise stated, the expiry date is calculated from the beginning of the virus titration or bacterial count (for live vaccines) or the beginning of the potency test (for other vaccines). For combined vaccines, the expiry date is that of the component which expires first. For vaccines stored by the manufacturer at a temperature lower than that stated on the label, the stability for the entire storage period is demonstrated by an appropriate study. The expiry date is then calculated from the date that the vaccine is stored in the conditions stated on the label.

The expiry date applies to vaccines stored in the prescribed conditions.

4. STORAGE

Store protected from light at a temperature of 5 ± 3 °C, unless otherwise indicated. Liquid preparations are not to be allowed to freeze, unless otherwise indicated.

5. LABELLING

The label states:

– that the preparation is for veterinary use;

- the volume of the preparation and the number of doses in the container;
- the route of administration;
- the type or types of bacteria (and where applicable the antigenic components) or viruses used and for live vaccines the minimum and the maximum number of live bacteria or the minimum and the maximum virus titre;
- where applicable, for inactivated vaccines, the minimum potency in International Units;
- where applicable, the name and amount of antimicrobial preservative or other substance added to the vaccine;
- the name of any substance that may cause an adverse reaction;
- for freeze-dried vaccines:
  - the name or composition and the volume of the reconstituting liquid to be added;
  - the period within which the vaccine is to be used after reconstitution;
- for vaccines with an oily adjuvant, that if the vaccine is accidentally injected into man, urgent medical attention is necessary;
- the animal species for which the vaccine is intended;
- the indications for the vaccine;
- the instructions for use;
- any contra-indications to the use of the product including any required warning on the dangers of administration of an overdose;
- the doses recommended for different species.

01/2008:1579
corrected 6.4

VEGETABLE FATTY OILS

Olea herbaria

DEFINITION

Vegetable fatty oils are mainly solid or liquid triglycerides of fatty acids. They may contain small amounts of other lipids such as waxes, free fatty acids, partial glycerides or unsaponifiable matters. Vegetable fatty oils are obtained from the seeds, the fruit or the pit/stone/kernel of various plants by expression and/or solvent extraction, then possibly refined and hydrogenated. A suitable antioxidant may be added if necessary.

Virgin oil: an oil obtained from raw materials of special quality by mechanical procedures (e.g. by cold expression or centrifugation).

Refined oil: an oil obtained by expression and/or solvent extraction, and subsequently either alkali refining (followed by bleaching and any deodorisation) or physical refining.

Hydrogenated oil: an oil obtained by expression and/or solvent extraction, and subsequently either alkali refining or physical refining, then possible bleaching, followed by drying, hydrogenation and subsequent bleaching and deodorisation.

Only alkali-refined oils are used in the manufacture of parenteral preparations.

PRODUCTION

Measures are taken to ensure that the oil complies with the limit for benzo[a]pyrene decided by the competent authority. A limit of 2.0 ppb is set in Commission Regulation (EC) No. 208/2005.

OBTENTION OF A CRUDE OIL

Where the plant has a high oil content, the oil is generally obtained by expression under heating followed by an extraction; where the plant has a low oil content, the oil is generally obtained by direct extraction.

Mechanical procedures

A. Expression

High-pressure screw-pressing. It consists of some or all of the following steps: cleaning, drying, dehulling or decorticating, grinding, cooking and flaking.

During *cleaning* the foreign matter is eliminated. *Drying* may be necessary if the seed moisture content is higher than desirable for downstream processing. *Decorticating* is useful to obtain a high-protein meal by reduction of fibre and to reduce impurities in the oil. *Cooking* serves various purposes: completion of the breakdown of oil cells, lowering of the viscosity of the oil, coagulation of the protein in the meal, adjustment of the moisture level, sterilisation of the seed, detoxifying undesirable seed constituents (gossypol for cottonseed) and fixing certain phosphatides in the cake thus lowering subsequent refining losses. The efficacy of the expression process is such that only 3 per cent to 6 per cent of the oil is left in the cake.

Wet screw-pressing. The bunches are loaded into cages (for palm fruit) and moved into a horizontal steriliser with application of live steam and heating. The purposes of this steriliser are inactivation of enzymes, loosening of the fruit on the bunch, coagulation of proteins, etc. After heating in a digester, the pulp is fed to a screw-press. The oil is centrifugally clarified and vacuum-dried.

Pre-pressing followed by solvent extraction. The same sequence of steps is performed as above. The main function of pre-pressing is to obtain a cake of excellent permeability for the following solvent extraction stage. The extraction is performed either in a percolation-type or in an immersion-type apparatus. The efficacy of the solvent extraction process is such that residual oil levels in meal are generally below 1 per cent.

B. Centrifugation

Centrifugation separates the oily phase from the aqueous phase, which contains water-soluble components and residual solid particles. This operation can be carried out using:

- self-cleaning bowl or disc centrifuges;
- super-decanters, which are horizontal turbines equipped with a cylindrical bowl that tapers slightly at one end and which contains a continuously turning screw that scrapes the sides of the bowl; the screw and the bowl rotate at different speeds; the solid particles are discarded from the tapered end of the bowl and the oil flows out from the other end.

Solvent extraction. Prior to extraction, the following steps are carried out: the seeds are tempered for about a week at a temperature below 24 °C in order to loosen the hull from the seed and allow the seed moisture to attain equilibrium, then the seeds are cleaned, ground, dehulled and flaked. The most widely used solvent is a mixture of mainly *n*-hexane and methylpentanes (bp: 65-70 °C) commonly referred to as 'hexane'. Due to the major fire and explosive risks of this mixture, liquified gases and supercritical gases may also be used.

REFINING

The objective of refining is to remove impurities and contaminants of the oil with the least possible damage to the triglycerides and with minimal loss of oil. The contents of the following substances are reduced:

- free fatty acids, which may cause deterioration of the oil by oxidation, a smoked taste when heated and a sharp flavour (by alkali refining);
- water, which favours the enzymatic hydrolysis reactions (by alkali refining, drying);
- partial glycerides, which may cause foaming and a bitter taste (by neutralisation, washing);

General monographs

- phosphatides and phosphorous compounds, which have emulsifying properties and may cause deposits, a darkening of the oil when heated, a cloudy appearance and bad organoleptic stability (by alkali refining);
- colouring matters such as chlorophyll (by alkali refining) and carotenoids (by bleaching);
- glycolipids, which may form colloidal solutions with water;
- free hydrocarbons, paraffin, waxes and resinous materials;
- metals (Fe, Cu, Pb, Sn, Pt, Pd, etc.), which are strong oxidation catalysts;
- pigments such as gossypol (in cottonseed oil) or mycotoxins such as aflatoxin (mainly in arachis seeds);
- pesticides;
- oxidation products (aldehydes, peroxides);
- proteins having possible allergic reactions;
- unsaponifiable matters (sterols, tocopherols and other vitamins);
- polycyclic aromatic hydrocarbons.

Alkali refining. It involves the following steps: degumming if necessary, neutralisation using alkali, washing and drying.

Degumming. During this step of the refining, i.e. treatment with water and/or phosphoric acid and/or sodium chloride, the phosphatides, phosphorous compounds and metals are eliminated. The use of this step depends on the nature of the oil.

Neutralisation with alkali. This step reduces the free-fatty-acid content below 0.1 per cent; the fatty acids are converted into oil-insoluble soaps, also called 'soapstocks'. Other substances may be removed by adsorption on these soaps: mucilaginous substances, phosphatides, oxidation products, colouring matters, etc. All substances that become insoluble in the oil on hydration are removed. Neutralisation with alkali has the disadvantage of saponifying a portion of neutral oil if the neutralisation is not well conducted.

Washing. This operation consists in removing the excess of soaps and alkali as well as the remaining traces of metals, phosphatides and other impurities, using hot water.

Drying. The remaining water is eliminated under vacuum before any further steps, such as bleaching.

Physical refining. It involves a steam treatment of the oil under high vacuum at a temperature greater than 235 °C. This technique can only be applied to oils naturally low in phosphatides and metals (palm and coconut) or from which phosphatides and metals have been removed by an acid treatment using concentrated phosphoric acid followed by an adsorptive treatment with activated bleaching earth (for sunflower, rapeseed, soya-bean). Moreover, it cannot be used for heat-sensitive oils (cottonseed oil), which darken.

Bleaching. The common method of bleaching is by adsorption treatment of the oil, which is generally heated at 90 °C for 30 min under vacuum, with bleaching earth (natural or activated) or carbon (activated or not); synthetic silica adsorbents may also be added. Substances that have not been totally removed during refining are eliminated, for example carotenoids and chlorophyll.

Deodorisation. Deodorisation eliminates odours, volatile substances and any residual extraction solvents; it involves injecting dry vapour into the oil, which is kept under vacuum at a high temperature. Different temperatures are used according to the oil: 200-235 °C for 1.5-3 h or greater than 240 °C for 30 min.

One of the main side reactions is thermic decolourisation due to the destruction of carotenoids when the temperature is greater than 150 °C. This technique provokes a loss of substances that may be distilled (free fatty acids, sterols, tocopherols, part of the refined oil), and may cause *cis-trans* isomerisation of the unsaturated fatty-acid double bonds.

WINTERISATION

Elimination of solids and waxes by filtration at low temperature (also called dewaxing). These solids and waxes could affect the appearance of the oil and cause deposits.

HYDROGENATION

The hydrogenation of the dried and/or bleached oil is performed using a catalyst (e.g. Ni, Pt, Pd), at a temperature of about 100-200 °C under hydrogen pressure. The catalyst is then removed by filtration at 90 °C. The hydrogen must be pure: free of poisons for the catalyst, water-free, and low in carbon dioxide, methane and nitrogen contents. Small amounts of polymers may be obtained. *Trans*-fatty acids are formed during partial hydrogenation.

CHROMATOGRAPHIC PURIFICATION

In high-purity applications, mainly for parenteral uses, the oil may be further purified by passing the oil through a column containing an activated earth. A solvent may sometimes be used to improve the efficiency. High-polarity molecules, such as oxidised materials, acids, alcohols, partial glycerides and free sterols, are preferentially removed.

When the oil is used in the manufacture of parenteral preparations, the limits set in the monograph for the acid value, the peroxide value and the water content may be different.

LABELLING

The label states:

- where applicable, that the oil was obtained by expression or extraction;
- where applicable, that the oil is suitable for use in the manufacture of parenteral preparations.

04/2010:1502

GLOSSARY

Glossa

The following introductory text provides definitions and/or explanations of terms that may be found in, or used in association with, the general monographs on dosage forms and the corresponding chapters on Pharmaceutical technical procedures (2.9), but that are not defined within them. Where relevant, reference is made to other equivalent terms that may be found in other publications or contexts.

This glossary is published for information.

Active substance

Equivalent terms: active ingredient, drug substance, medicinal substance, active pharmaceutical ingredient.

Basis

A basis is the carrier, composed of one or more excipients, for the active substance(s) in semi-solid and solid preparations.

Colloidal dispersion

A colloidal dispersion is a system in which particles of colloidal size (a dimension of approximately between 1 nm and 500 nm) of any nature (solid, liquid or gas) are dispersed in a continuous phase of a different composition and/or state.

Conventional-release dosage form

A conventional-release dosage form is a preparation showing a release of the active substance(s) which is not deliberately modified by a special formulation design and/or manufacturing method. In the case of a solid dosage form, the dissolution profile of the active substance depends essentially on its intrinsic properties. Equivalent term: immediate-release dosage form.

Delayed-release dosage form

A delayed-release dosage form is a modified-release dosage form showing a release of the active substance(s) which is delayed. Delayed release is achieved by a special formulation design and/or manufacturing method. Delayed-release dosage forms include gastro-resistant preparations as defined in the general monographs on solid oral dosage forms.

Emulsion

An emulsion is a dispersed system consisting of a mixture of at least 2 liquids that are not miscible with each other. One of the liquids is dispersed in the other as droplets.

Large-volume parenteral

An infusion or injection supplied in a container with a nominal content of more than 100 mL.

Modified-release dosage form

A modified-release dosage form is a preparation where the rate and/or place of release of the active substance(s) is different from that of a conventional-release dosage form administered by the same route. This deliberate modification is achieved by a special formulation design and/or manufacturing method. Modified-release dosage forms include prolonged-release, delayed-release and pulsatile-release dosage forms.

Prolonged-release dosage form

A prolonged-release dosage form is a modified-release dosage form showing a slower release of the active substance(s) than that of a conventional-release dosage form administered by the same route. Prolonged release is achieved by a special formulation design and/or manufacturing method. Equivalent term: extended-release dosage form.

Pulsatile-release dosage form

A pulsatile-release dosage form is a modified-release dosage form showing a sequential release of the active substance(s). Sequential release is achieved by a special formulation design and/or manufacturing method.

Small-volume parenteral

An infusion or injection supplied in a container with a nominal content of 100 mL or less.

Solution

A solution is a mixture forming a single phase containing one or more dissolved substances, i.e. substances in a molecular state dispersed in a solvent or in miscible solvents.

Spheroids

Spheroids are considered to be spherical or approximately spherical granules with a usually increased mechanical resistance compared to conventional *granules (0499)*. They possess a smooth, uniform surface, with a typical size range of 200 µm to 2.8 mm. Spheroids may be prepared by any suitable method.

Suspension

A suspension is a dispersed system containing solid particles dispersed in a liquid or semi-solid, continuous phase, in which the solid particles are practically insoluble.

Standard Term

Standard Terms for describing the pharmaceutical form of a medicinal product, the routes of administration and the containers used have been established by the European Pharmacopoeia Commission and are provided in a separate publication on Standard Terms.

Vehicle

A vehicle is the carrier, composed of one or more excipients, for the active substance(s) in a liquid preparation.

Dosage forms

01/2008:0016

CAPSULES

Capsulae

The requirements of this monograph do not necessarily apply to preparations that are presented as capsules intended for use other than by oral administration. Requirements for such preparations may be found, where appropriate, in other general monographs, for example Rectal preparations (1145) and Vaginal preparations (1164).

DEFINITION

Capsules are solid preparations with hard or soft shells of various shapes and capacities, usually containing a single dose of active substance(s). They are intended for oral administration.

The capsule shells are made of gelatin or other substances, the consistency of which may be adjusted by the addition of substances such as glycerol or sorbitol. Excipients such as surface-active agents, opaque fillers, antimicrobial preservatives, sweeteners, colouring matter authorised by the competent authority and flavouring substances may be added. The capsules may bear surface markings.

The contents of capsules may be solid, liquid or of a paste-like consistency. They consist of one or more active substances with or without excipients such as solvents, diluents, lubricants and disintegrating agents. The contents do not cause deterioration of the shell. The shell, however, is attacked by the digestive fluids and the contents are released.

Where applicable, containers for capsules comply with the requirements of *Materials used for the manufacture of containers* (*3.1* and subsections) and *Containers* (*3.2* and subsections).

Several categories of capsules may be distinguished:

- hard capsules;
- soft capsules;
- gastro-resistant capsules;
- modified-release capsules;
- cachets.

PRODUCTION

In the manufacture, packaging, storage and distribution of capsules, suitable measures are taken to ensure their microbial quality; recommendations on this aspect are provided in the text on *5.1.4. Microbiological quality of non-sterile pharmaceutical preparations and substances for pharmaceutical use*.

TESTS

Uniformity of dosage units. Capsules comply with the test for uniformity of dosage units (*2.9.40*) or, where justified and authorised, with the tests for uniformity of content and/or uniformity of mass shown below. Herbal drugs and herbal drug preparations present in the dosage form are not subject to the provisions of this paragraph.

Uniformity of content (*2.9.6*). Unless otherwise prescribed or justified and authorised, capsules with a content of active substance less than 2 mg or less than 2 per cent of the fill mass comply with test B for uniformity of content of single-dose preparations. If the preparation has more than one active substance, the requirement applies only to those ingredients which correspond to the above conditions.

Uniformity of mass (*2.9.5*). Capsules comply with the test for uniformity of mass of single-dose preparations. If the test for uniformity of content is prescribed for all the active substances, the test for uniformity of mass is not required.

Dissolution. A suitable test may be carried out to demonstrate the appropriate release of the active substance(s), for example one of the tests described in *Dissolution test for solid dosage forms* (*2.9.3*).

Where a dissolution test is prescribed, a disintegration test may not be required.

STORAGE

Store at a temperature not exceeding 30 °C.

LABELLING

The label states the name of any added antimicrobial preservative.

Hard capsules

DEFINITION

Hard capsules have shells consisting of 2 prefabricated, cylindrical sections, each of which has one rounded, closed end and one open end.

PRODUCTION

The active substance(s), usually in solid form (powder or granules), are filled into one of the sections that is then closed by slipping the other section over it. The security of the closure may be strengthened by suitable means.

TESTS

Disintegration (*2.9.1*). Hard capsules comply with the test. Use *water R* as the liquid medium. When justified and authorised, *0.1 M hydrochloric acid* or *artificial gastric juice R* may be used as the liquid medium. If the capsules float on the surface of the water, a disc may be added. Operate the apparatus for 30 min, unless otherwise justified and authorised.

Soft capsules

DEFINITION

Soft capsules have thicker shells than those of hard capsules. The shells consist of a single part and are of various shapes.

PRODUCTION

Soft capsules are usually formed, filled and sealed in one operation, but for extemporaneous use the shell may be prefabricated. The shell material may contain an active substance.

Liquids may be enclosed directly; solids are usually dissolved or dispersed in a suitable vehicle to give a solution or dispersion of a paste-like consistency.

There may be partial migration of the constituents from the capsule contents into the shell and vice versa because of the nature of the materials and the surfaces in contact.

TESTS

Disintegration (*2.9.1*). Soft capsules comply with the test. Use *water R* as the liquid medium. When justified and authorised, *0.1 M hydrochloric acid* or *artificial gastric juice R* may be used as the liquid medium. Add a disc to each tube. Liquid active substances dispensed in soft capsules may attack the disc; in such circumstances and where authorised, the disc may be omitted. Operate the apparatus for 30 min, unless otherwise justified and authorised. If the capsules fail to comply because of adherence to the discs, the results are invalid. Repeat the test on a further 6 capsules omitting the discs.

Modified-release capsules

DEFINITION

Modified-release capsules are hard or soft capsules in which the contents or the shell or both contain special excipients or are prepared by a special process designed to modify the rate, the place or the time at which the active substance(s) are released.

Modified-release capsules include prolonged-release capsules and delayed-release capsules.

PRODUCTION

A suitable test is carried out to demonstrate the appropriate release of the active substance(s).

Gastro-resistant capsules

DEFINITION

Gastro-resistant capsules are delayed-release capsules that are intended to resist the gastric fluid and to release their active substance or substances in the intestinal fluid. Usually they are prepared by filling capsules with granules or with particles covered with a gastro-resistant coating, or in certain cases, by providing hard or soft capsules with a gastro-resistant shell (enteric capsules).

PRODUCTION

For capsules filled with granules or filled with particles covered with a gastro-resistant coating, a suitable test is carried out to demonstrate the appropriate release of the active substance(s).

TESTS

Disintegration (*2.9.1*). Capsules with a gastro-resistant shell comply with the test with the following modifications. Use *0.1 M hydrochloric acid* as the liquid medium and operate the apparatus for 2 h, or other such time as may be authorised, without the discs. Examine the state of the capsules. The time of resistance to the acid medium varies according to the formulation of the capsules to be examined. It is typically 2 h to 3 h but even with authorised deviations it must not be less than 1 h. No capsule shows signs of disintegration or rupture permitting the escape of the contents. Replace the

acid by *phosphate buffer solution pH 6.8 R*. When justified and authorised, a buffer solution of pH 6.8 with added pancreas powder (for example, 0.35 g of *pancreas powder R* per 100 mL of buffer solution) may be used. Add a disc to each tube. Operate the apparatus for 60 min. If the capsules fail to comply because of adherence to the discs, the results are invalid. Repeat the test on a further 6 capsules omitting the discs.

Dissolution. For capsules prepared from granules or particles already covered with a gastro-resistant coating, a suitable test is carried out to demonstrate the appropriate release of the active substance(s), for example the test described in *Dissolution test for solid dosage forms* (*2.9.3*).

Cachets

DEFINITION

Cachets are solid preparations consisting of a hard shell containing a single dose of one or more active substances. The cachet shell is made of unleavened bread usually from rice flour and consists of 2 prefabricated flat cylindrical sections. Before administration, the cachets are immersed in water for a few seconds, placed on the tongue and swallowed with a draught of water.

LABELLING

The label states the method of administration of the cachets.

01/2008:1239

CHEWING GUMS, MEDICATED

Masticabilia gummis medicata

DEFINITION

Medicated chewing gums are solid, single-dose preparations with a base consisting mainly of gum that are intended to be chewed but not swallowed.

They contain one or more active substances which are released by chewing. After dissolution or dispersion of the active substances in saliva, chewing gums are intended to be used for:

- local treatment of mouth diseases;
- systemic delivery after absorption through the buccal mucosa or from the gastrointestinal tract.

PRODUCTION

Medicated chewing gums are made with a tasteless masticatory gum base that consists of natural or synthetic elastomers. They may contain other excipients such as fillers, softeners, sweetening agents, flavouring substances, stabilisers and plasticisers and authorised colouring matter.

Medicated chewing gums are manufactured by compression or by softening or melting the gum bases and adding successively the other substances. In the latter case, chewing gums are then further processed to obtain the desired gum presentation. The medicated chewing gums may be coated, for example, if necessary to protect from humidity and light.

Unless otherwise justified and authorised, a suitable test is carried out to demonstrate the appropriate release of the active substance(s). The method *Dissolution test for medicated chewing gums* (*2.9.25*) may be used to that purpose.

In the manufacture, packaging, storage and distribution of medicated chewing gums, suitable measures must be taken to ensure their microbial quality; recommendations related to this aspect are provided in the general chapter on *5.1.4. Microbiological quality of non-sterile pharmaceutical preparations and substances for pharmaceutical use*.

TESTS

Uniformity of dosage units. Medicated chewing gums comply with the test for uniformity of dosage units (*2.9.40*) or, where justified and authorised, with the tests for uniformity of content and/or uniformity of mass shown below. Herbal drugs and herbal drug preparations present in the dosage form are not subject to the provisions of this paragraph.

Uniformity of content (*2.9.6*). Unless otherwise prescribed or justified and authorised, medicated chewing gums with a content of active substance less than 2 mg or less than 2 per cent of the total mass comply with test A for uniformity of content of single-dose preparations. If the preparation contains more than one active substance, the requirement applies only to those active substances which correspond to the above conditions.

Uniformity of mass (*2.9.5*). Uncoated medicated chewing gums and, unless otherwise justified and authorised, coated medicated chewing gums comply with the test for uniformity of mass of single-dose preparations. If the test for uniformity of content is prescribed for all the active substances, the test for uniformity of mass is not required.

STORAGE

Store uncoated medicated chewing gums protected from humidity and light.

04/2011:0652

EAR PREPARATIONS

Auricularia

DEFINITION

Ear preparations are liquid, semi-solid or solid preparations intended for instillation, for spraying, for insufflation, for application to the auditory meatus or as an ear wash.

Ear preparations usually contain 1 or more active substances in a suitable vehicle. They may contain excipients, for example, to adjust tonicity or viscosity, to adjust or stabilise the pH, to increase the solubility of the active substances, to stabilise the preparation or to provide adequate antimicrobial properties. The excipients do not adversely affect the intended medicinal action of the preparation or, at the concentrations used, cause toxicity or undue local irritation.

Preparations for application to the injured ear, particularly where the eardrum is perforated, or prior to surgery are sterile and, unless otherwise justified and authorised, free from antimicrobial preservatives and supplied in single-dose containers.

Ear preparations are supplied in multidose or single-dose containers, provided, if necessary, with a suitable administration device, which may be designed to avoid the introduction of contaminants.

Unless otherwise justified and authorised, aqueous ear preparations supplied in multidose containers contain a suitable antimicrobial preservative at a suitable concentration, except where the preparation itself has adequate antimicrobial properties.

Where applicable, containers for ear preparations comply with the requirements of chapters *3.1. Materials used for the manufacture of containers* (and subsections) and *3.2. Containers* (and subsections).

Several categories of ear preparations may be distinguished:

- ear drops and sprays;
- semi-solid ear preparations;
- ear powders;
- ear washes;
- ear tampons.

PRODUCTION

During development of an ear preparation whose formulation contains an antimicrobial preservative, the need for and the efficacy of the chosen preservative shall be demonstrated to the satisfaction of the competent authority. A suitable test

method together with criteria for judging the preservative properties of the formulation are provided in chapter *5.1.3. Efficacy of antimicrobial preservation*.

During development of ear washes, it must be demonstrated that the nominal content can be withdrawn from the container of preparations presented in single-dose containers.

In the manufacture, packaging, storage and distribution of ear preparations, suitable measures are taken to ensure their microbial quality; recommendations on this aspect are provided in chapter *5.1.4. Microbiological quality of pharmaceutical preparations*.

Sterile ear preparations are prepared using materials and methods designed to ensure sterility and to avoid the introduction of contaminants and the growth of micro-organisms; recommendations on this aspect are provided in chapter *5.1.1. Methods of preparation of sterile products*.

In the manufacture of ear preparations containing dispersed particles, measures are taken to ensure a suitable and controlled particle size with regard to the intended use.

TESTS

Uniformity of dosage units. Single-dose ear preparations comply with the test for uniformity of dosage units (*2.9.40*) or, where justified and authorised, with the tests for uniformity of content and/or uniformity of mass shown below. Herbal drugs and herbal drug preparations present in the dosage form are not subject to the provisions of this paragraph.

Uniformity of content (*2.9.6*). Unless otherwise prescribed or justified and authorised, single-dose ear preparations with a content of active substance less than 2 mg or less than 2 per cent of the total mass comply with test B for uniformity of content of single-dose preparations. If the preparation has more than one active substance, the requirement applies only to those ingredients that correspond to the above conditions.

Uniformity of mass (*2.9.5*). Single-dose ear preparations comply with the test for uniformity of mass of single-dose preparations. If the test for uniformity of content is prescribed for all the active substances, the test for uniformity of mass is not required.

Sterility (*2.6.1*). Where the label indicates that the ear preparation is sterile, it complies with the test for sterility.

STORAGE

If the preparation is sterile, store in a sterile, airtight, tamper-proof container.

LABELLING

The label states:

- the name of any added antimicrobial preservative;
- where applicable, that the preparation is sterile;
- for multidose containers, the period after opening the container after which the contents must not be used. This period does not exceed 4 weeks, unless otherwise justified and authorised.

Ear drops and ear sprays

DEFINITION

Ear drops and ear sprays are solutions, emulsions or suspensions of one or more active substances in liquids suitable for application to the auditory meatus without exerting harmful pressure on the eardrum (for example, water, glycols or fatty oils). They may also be placed in the auditory meatus by means of a tampon impregnated with the liquid.

Emulsions may show evidence of phase separation but are readily redispersed on shaking. Suspensions may show a sediment, which is readily dispersed on shaking to give a suspension that remains sufficiently stable to enable the correct dose to be delivered.

Ear drops are usually supplied in multidose containers of glass or suitable plastic material that are fitted with an integral dropper or with a screw cap of suitable materials incorporating a dropper and rubber or plastic teat. Alternatively, such a cap assembly is supplied separately. Ear sprays are usually supplied in multidose containers fitted with an appropriate applicator. When ear sprays are supplied in pressurised containers, these comply with the requirements of the monograph *Pressurised pharmaceutical preparations (0523)*.

Semi-solid ear preparations

DEFINITION

Semi-solid ear preparations are intended for application to the external auditory meatus, if necessary by means of a tampon impregnated with the preparation.

Semi-solid ear preparations comply with the requirements of the monograph *Semi-solid preparations for cutaneous application (0132)*.

They are supplied in containers fitted with a suitable applicator.

Ear powders

DEFINITION

Ear powders are intended for application or insufflation into the external auditory meatus. They comply with the requirements of the monograph *Powders for cutaneous application (1166)*.

They are supplied in containers fitted with a suitable device for application or insufflation.

Ear washes

DEFINITION

Ear washes are preparations intended to cleanse the external auditory meatus. They are usually aqueous solutions with a pH within physiological limits.

Ear washes intended for application to injured parts or prior to a surgical operation are sterile.

Ear tampons

DEFINITION

Ear tampons are intended to be inserted into the external auditory meatus. They comply with the requirements of the monograph *Medicated tampons (1155)*.

01/2008:1163

EYE PREPARATIONS

Ophthalmica

DEFINITION

Eye preparations are sterile liquid, semi-solid or solid preparations intended for administration upon the eyeball and/or to the conjunctiva, or for insertion in the conjunctival sac.

Where applicable, containers for eye preparations comply with the requirements of materials used for the manufacture of containers (*3.1* and subsections) and containers (*3.2* and subsections).

Several categories of eye preparations may be distinguished:

- eye drops;
- eye lotions;
- powders for eye drops and powders for eye lotions;
- semi-solid eye preparations;
- ophthalmic inserts.

PRODUCTION

During the development of an eye preparation whose formulation contains an antimicrobial preservative, the necessity for and the efficacy of the chosen preservative shall be demonstrated to the satisfaction of the competent authority. A suitable test method together with criteria for judging the preservative properties of the formulation are provided in chapter *5.1.3. Efficacy of antimicrobial preservation*.

Eye preparations are prepared using materials and methods designed to ensure sterility and to avoid the introduction of contaminants and the growth of micro-organisms; recommendations on this aspect are provided in chapter *5.1.1. Methods of preparation of sterile products*.

In the manufacture of eye preparations containing dispersed particles, measures are taken to ensure a suitable and controlled particle size with regard to the intended use.

During development, it must be demonstrated that the nominal contents can be withdrawn from the container of liquid and semi-solid eye preparations supplied in single-dose containers.

TESTS

Sterility (*2.6.1*). Eye preparations comply with the test. Applicators supplied separately also comply with the test. Remove the applicator with aseptic precautions from its package and transfer it to a tube of culture medium so that it is completely immersed. Incubate and interpret the results as described in the test.

STORAGE

Unless otherwise justified and authorised, store in a sterile, tamper-proof container.

LABELLING

The label states the name of any added antimicrobial preservative.

Eye drops

DEFINITION

Eye drops are sterile aqueous or oily solutions, emulsions or suspensions of one or more active substances intended for instillation into the eye.

Eye drops may contain excipients, for example, to adjust the tonicity or the viscosity of the preparation, to adjust or stabilise the pH, to increase the solubility of the active substance, or to stabilise the preparation. These substances do not adversely affect the intended medicinal action or, at the concentrations used, cause undue local irritation.

Aqueous preparations supplied in multidose containers contain a suitable antimicrobial preservative in appropriate concentration except when the preparation itself has adequate antimicrobial properties. The antimicrobial preservative chosen must be compatible with the other ingredients of the preparation and must remain effective throughout the period of time during which eye drops are in use.

If eye drops do not contain antimicrobial preservatives they are supplied in single-dose containers or in multidose containers preventing microbial contamination of the contents after opening.

Eye drops intended for use in surgical procedures do not contain antimicrobial preservatives.

Eye drops that are solutions, examined under suitable conditions of visibility, are practically clear and practically free from particles.

Eye drops that are suspensions may show a sediment that is readily redispersed on shaking to give a suspension which remains sufficiently stable to enable the correct dose to be delivered.

Multidose preparations are supplied in containers that allow successive drops of the preparation to be administered. The containers contain at most 10 mL of the preparation, unless otherwise justified and authorised.

TESTS

Particle size. Unless otherwise justified and authorised, eye drops in the form of a suspension comply with the following test: introduce a suitable quantity of the suspension into a counting cell or with a micropipette onto a slide, as appropriate, and scan under a microscope an area corresponding to 10 µg of the solid phase. For practical reasons, it is recommended that the whole sample is first scanned at low magnification (e.g. × 50) and particles greater than 25 µm are identified. These larger particles can then be measured at a larger magnification (e.g. × 200 to × 500). For each 10 µg of solid active substance, not more than 20 particles have a maximum dimension greater than 25 µm, and not more than 2 of these particles have a maximum dimension greater than 50 µm. None of the particles has a maximum dimension greater than 90 µm.

LABELLING

The label states, for multidose containers, the period after opening the container after which the contents must not be used. This period does not exceed 4 weeks, unless otherwise justified and authorised.

Eye lotions

DEFINITION

Eye lotions are sterile aqueous solutions intended for use in rinsing or bathing the eye or for impregnating eye dressings.

Eye lotions may contain excipients, for example to adjust the tonicity or the viscosity of the preparation or to adjust or stabilise the pH. These substances do not adversely affect the intended action or, at the concentrations used, cause undue local irritation.

Eye lotions supplied in multidose containers contain a suitable antimicrobial preservative in appropriate concentration except when the preparation itself has adequate antimicrobial properties. The antimicrobial preservative chosen is compatible with the other ingredients of the preparation and remains effective throughout the period of time during which the eye lotions are in use.

If eye lotions do not contain antimicrobial preservatives, they are supplied in single-dose containers. Eye lotions intended for use in surgical procedures or in first-aid treatment do not contain an antimicrobial preservative and are supplied in single-dose containers.

Eye lotions, examined under suitable conditions of visibility, are practically clear and practically free from particles.

The containers for multidose preparations do not contain more than 200 mL of eye lotion, unless otherwise justified and authorised.

LABELLING

The label states:

- where applicable, that the contents are to be used on one occasion only;
- for multidose containers, the period after opening the container after which the contents must not be used; this period does not exceed 4 weeks, unless otherwise justified and authorised.

Powders for eye drops and powders for eye lotions

DEFINITION

Powders for the preparation of eye drops and eye lotions are supplied in a dry, sterile form to be dissolved or suspended in an appropriate liquid vehicle at the time of administration. They may contain excipients to facilitate dissolution or dispersion, to prevent caking, to adjust the tonicity, to adjust or stabilise the pH or to stabilise the preparation.

After dissolution or suspension in the prescribed liquid, they comply with the requirements for eye drops or eye lotions, as appropriate.

TESTS

Uniformity of dosage units (*2.9.40*). Single-dose powders for eye drops and eye lotions comply with the test or, where justified and authorised, with the tests for uniformity of content and/or uniformity of mass shown below. Herbal drugs and herbal drug preparations present in the dosage form are not subject to the provisions of this paragraph.

Uniformity of content (*2.9.6*). Unless otherwise prescribed or justified and authorised, single-dose powders for eye drops and eye lotions with a content of active substance less then 2 mg or less than 2 per cent of the total mass comply with test B. If the preparation has more than one active substance, the requirement applies only to those substances that correspond to the above condition.

Uniformity of mass (*2.9.5*). Single-dose powders for eye drops and eye lotions comply with the test. If the test for uniformity of content is prescribed for all the active substances, the test for uniformity of mass is not required.

Semi-solid eye preparations

DEFINITION

Semi-solid eye preparations are sterile ointments, creams or gels intended for application to the conjunctiva or to the eyelids. They contain one or more active substances dissolved or dispersed in a suitable basis. They have a homogeneous appearance.

Semi-solid eye preparations comply with the requirements of the monograph *Semi-solid preparations for cutaneous application (0132)*. The basis is non-irritant to the conjunctiva.

Semi-solid eye preparations are packed in small, sterilised collapsible tubes fitted or provided with a sterilised cannula. The containers contain at most 10 g of the preparation, unless otherwise justified and authorised. The tubes must be well-closed to prevent microbial contamination. Semi-solid eye preparations may also be packed in suitably designed single-dose containers. The containers, or the nozzles of tubes, are of such a shape as to facilitate administration without contamination.

TESTS

Particle size. Semi-solid eye preparations containing dispersed solid particles comply with the following test: spread gently a quantity of the preparation corresponding to at least 10 µg of solid active substance as a thin layer. Scan under a microscope the whole area of the sample. For practical reasons, it is recommended that the whole sample is first scanned at a small magnification (e.g. × 50) and particles greater than 25 µm are identified. These larger particles can then be measured at a larger magnification (e.g. × 200 to × 500). For each 10 µg of solid active substance, not more than 20 particles have a maximum dimension greater than 25 µm, and not more than 2 of these particles have a maximum dimension greater than 50 µm. None of the particles has a maximum dimension greater than 90 µm.

LABELLING

The label states, for multidose containers, the period after opening the container after which the contents must not be used. This period does not exceed 4 weeks, unless otherwise justified and authorised.

Ophthalmic inserts

DEFINITION

Ophthalmic inserts are sterile, solid or semi-solid preparations of suitable size and shape, designed to be inserted in the conjunctival sac, to produce an ocular effect. They generally consist of a reservoir of active substance embedded in a matrix or bounded by a rate-controlling membrane. The active substance, which is more or less soluble in lacrymal liquid, is released over a determined period of time.

Ophthalmic inserts are individually distributed into sterile containers.

PRODUCTION

In the manufacture of ophthalmic inserts, measures are taken to ensure a suitable dissolution behaviour.

TESTS

Uniformity of dosage units (*2.9.40*). Ophthalmic inserts comply with the test or, where justified and authorised, with the test for uniformity of content shown below. Herbal drugs and herbal drug preparations present in the dosage form are not subject to the provisions of this paragraph.

Uniformity of content (*2.9.6*). Ophthalmic inserts comply, where applicable, with test A.

LABELLING

The label states:

- where applicable, the total quantity of active substance per insert;
- where applicable, the dose released per unit time.

01/2008:1105

FOAMS, MEDICATED

Musci medicati

Additional requirements for medicated foams may be found, where appropriate, in other general monographs, for example on Rectal preparations (1145), Vaginal preparations (1164) and Liquid preparations for cutaneous application (0927).

DEFINITION

Medicated foams are preparations consisting of large volumes of gas dispersed in a liquid generally containing one or more active substances, a surfactant ensuring their formation and various other excipients. Medicated foams are usually intended for application to the skin or mucous membranes.

Medicated foams are usually formed at the time of administration from a liquid preparation in a pressurised container. The container is equipped with a device consisting of a valve and a push button suitable for the delivery of the foam.

Medicated foams intended for use on severely injured skin and on large open wounds are sterile.

Medicated foams supplied in pressurised containers comply with the requirements of the monograph on *Pressurised pharmaceutical preparations (0523)*.

PRODUCTION

Sterile medicated foams are prepared using materials and methods designed to ensure sterility and to avoid the introduction of contaminants and the growth of

micro-organisms; recommendations on this aspect are provided in the text on *Methods of preparation of sterile products* (*5.1.1*).

TESTS

Relative foam density. Maintain the container at about 25 °C for at least 24 h. Taking care not to warm the container, fit a rigid tube 70 mm to 100 mm long and about 1 mm in internal diameter onto the push button. Shake the container to homogenise the liquid phase of the contents and dispense 5 mL to 10 mL of foam to waste. Tare a flat-bottomed dish with a volume of about 60 mL and about 35 mm high. Place the end of the rigid tube attached to the push button in the corner of the dish, press the push button and fill the dish uniformly, using a circular motion. After the foam has completely expanded, level off by removing the excess foam with a slide. Weigh. Determine the mass of the same volume of *water R* by filling the same dish with *water R*.

The relative foam density is equivalent to the ratio:

$$\frac{m}{e}$$

m = mass of the test sample of foam, in grams;

e = mass of same volume of *water R*, in grams.

Carry out three measurements. None of the individual values deviate by more than 20 per cent from the mean value.

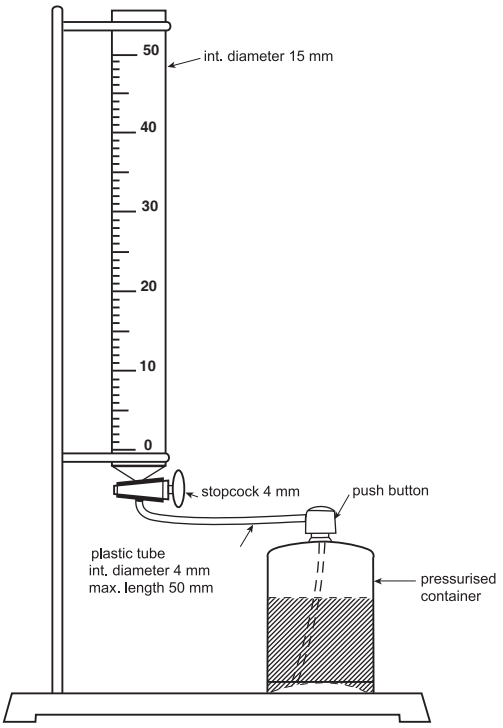

Figure 1105.-1. – *Apparatus for the determination of the duration of expansion*

Duration of expansion. The apparatus (Figure 1105.-1) consists of a 50 mL burette, 15 mm in internal diameter, with 0.1 mL graduations and fitted with a 4 mm single bore stopcock. The graduation corresponding to 30 mL is at least 210 mm from the axis of the stopcock. The lower part of the burette is connected by means of a plastic tube not longer than 50 mm and 4 mm in internal diameter to the foam-generating container equipped with a push button fitted to this connection. Maintain the container at about 25 °C for at least 24 h. Shake the container, taking care not to warm it, to homogenise the liquid phase of the contents and dispense 5 mL to 10 mL of the foam to waste. Connect the push button to the outlet of the burette. Press the button and introduce about 30 mL of foam in a single delivery. Close the stopcock and at the same time start the chronometer and read the volume of foam in the burette. Every 10 s read the growing volume until the maximum volume is reached.

Carry out three measurements. None of the times needed to obtain the maximum volume is more than 5 min.

Sterility (*2.6.1*). When the label indicates that the preparation is sterile, it complies with the test for sterility.

LABELLING

The label states, where applicable, that the preparation is sterile.

01/2008:0499

GRANULES

Granulata

Requirements for granules to be used for the preparation of oral solutions or suspensions are given in the monograph on Liquid preparations for oral use (0672). Where justified and authorised, the requirements of this monograph do not apply to granules for veterinary use.

DEFINITION

Granules are preparations consisting of solid, dry aggregates of powder particles sufficiently resistant to withstand handling. They are intended for oral administration. Some are swallowed as such, some are chewed and some are dissolved or dispersed in water or another suitable liquid before being administered.

Granules contain one or more active substances with or without excipients and, if necessary, colouring matter authorised by the competent authority and flavouring substances.

Granules are presented as single-dose or multidose preparations. Each dose of a multidose preparation is administered by means of a device suitable for measuring the quantity prescribed. For single-dose granules, each dose is enclosed in an individual container, for example a sachet or a vial.

Where applicable, containers for granules comply with the requirements of *Materials used for the manufacture of containers* (*3.1* and subsections) and *Containers* (*3.2* and subsections).

Several categories of granules may be distinguished:

- effervescent granules;
- coated granules;
- gastro-resistant granules;
- modified-release granules.

PRODUCTION

In the manufacture, packaging, storage and distribution of granules, suitable measures are taken to ensure their microbial quality; recommendations on this aspect are provided in the text on *5.1.4. Microbiological quality of non-sterile pharmaceutical preparations and substances for pharmaceutical use*.

TESTS

Uniformity of dosage units. Single-dose granules comply with the test for uniformity of dosage units (*2.9.40*) or, where justified and authorised, with the tests for uniformity of content and/or uniformity of mass shown below. Herbal drugs and herbal drug preparations present in the dosage form are not subject to the provisions of this paragraph.

Uniformity of content (*2.9.6*). Unless otherwise prescribed or justified and authorised, single-dose granules with a content of active substance less than 2 mg or less than 2 per cent of the total mass comply with test B for uniformity of content of

single-dose preparations. If the preparation has more than one active substance, the requirement applies only to those substances which correspond to the above conditions.

Uniformity of mass (*2.9.5*). Single-dose granules except for coated granules comply with the test for uniformity of mass of single-dose preparations. If the test for uniformity of content is prescribed for all the active substances, the test for uniformity of mass is not required.

Uniformity of mass of delivered doses from multidose containers (*2.9.27*). Granules supplied in multidose containers comply with the test.

STORAGE

If the preparation contains volatile ingredients or the contents have to be protected, store in an airtight container.

Effervescent granules

DEFINITION

Effervescent granules are uncoated granules generally containing acid substances and carbonates or hydrogen carbonates which react rapidly in the presence of water to release carbon dioxide. They are intended to be dissolved or dispersed in water before administration.

TESTS

Disintegration. Place one dose of the effervescent granules in a beaker containing 200 mL of *water R* at 15-25 °C; numerous bubbles of gas are evolved. When the evolution of gas around the individual grains ceases, the granules have disintegrated, being either dissolved or dispersed in the water. Repeat the operation on 5 other doses. The preparation complies with the test if each of the 6 doses used disintegrates within 5 min.

STORAGE

In an airtight container.

Coated granules

DEFINITION

Coated granules are usually multidose preparations and consist of granules coated with one or more layers of mixtures of various excipients.

PRODUCTION

The substances used as coatings are usually applied as a solution or suspension in conditions in which evaporation of the vehicle occurs.

TESTS

Dissolution. A suitable test may be carried out to demonstrate the appropriate release of the active substance(s), for example one of the tests described in *Dissolution test for solid dosage forms* (*2.9.3*).

Modified-release granules

DEFINITION

Modified-release granules are coated or uncoated granules which contain special excipients or which are prepared by special procedures, or both, designed to modify the rate, the place or the time at which the active substance or substances are released.

Modified-release granules include prolonged-release granules and delayed-release granules.

PRODUCTION

A suitable test is carried out to demonstrate the appropriate release of the active substance(s).

TESTS

Dissolution. Carry out a suitable test to demonstrate the appropriate release of the active substance(s), for example the test described in *Dissolution test for solid dosage forms* (*2.9.3*).

Gastro-resistant granules

DEFINITION

Gastro-resistant granules are delayed-release granules that are intended to resist the gastric fluid and to release the active substance(s) in the intestinal fluid. These properties are achieved by covering the granules with a gastro-resistant material (enteric-coated granules) or by other suitable means.

PRODUCTION

A suitable test is carried out to demonstrate the appropriate release of the active substance(s).

TESTS

Dissolution. Carry out a suitable test to demonstrate the appropriate release of the active substance(s), for example the test described in *Dissolution test for solid dosage forms* (*2.9.3*).

01/2008:0945

INTRAMAMMARY PREPARATIONS FOR VETERINARY USE

Praeparationes intramammariae ad usum veterinarium

DEFINITION

Intramammary preparations for veterinary use are sterile preparations intended for introduction into the mammary gland via the teat canal. There are two main categories: those intended for administration to lactating animals, and those intended for administration to animals at the end of lactation or to non-lactating animals for the treatment or prevention of infection.

Intramammary preparations for veterinary use are solutions, emulsions or suspensions or semi-solid preparations containing one or more active substances in a suitable vehicle. They may contain excipients such as stabilising, emulsifying, suspending and thickening agents. Suspensions may show a sediment which is readily dispersed on shaking. Emulsions may show evidence of phase separation but are readily redispersed on shaking.

Unless otherwise justified and authorised, intramammary preparations for veterinary use are supplied in containers for use on one occasion only for introduction in a single teat canal of an animal.

If supplied in multidose containers, aqueous preparations contain a suitable antimicrobial preservative at a suitable concentration, except where the preparation itself has adequate antimicrobial properties. Precautions for administration and for storage between administrations must be taken.

Where applicable, containers for intramammary preparations for veterinary use comply with the requirements of *Materials used for the manufacture of containers* (*3.1* and subsections) and *Containers* (*3.2* and subsections).

PRODUCTION

During the development of a intramammary preparation for veterinary use, the formulation for which contains an antimicrobial preservative, the effectiveness of the chosen preservative shall be demonstrated to the satisfaction of the competent authority. A suitable test method together with criteria for judging the preservative properties of the formulation are provided in the text on *Efficacy of antimicrobial preservation* (*5.1.3*).

Intramammary preparations for veterinary use are prepared using materials and methods designed to ensure sterility and to avoid the introduction of contaminants and the growth of micro-organisms; recommendations on this aspect are provided in the text on *Methods of preparation of sterile products* (*5.1.1*).

In the manufacture of intramammary preparations for veterinary use containing dispersed particles, measures are taken to ensure a suitable and controlled particle size with regard to the intended use.

TESTS

Deliverable mass or volume. Squeeze out as much as possible of the contents of ten containers according to the instructions on the label. The mean mass or volume does not differ by more than 10 per cent from the nominal mass or volume.

Sterility (*2.6.1*). Intramammary preparations for veterinary use comply with the test for sterility; use the technique of membrane filtration or, in justified cases, direct inoculation of the culture media. Squeeze out the contents of ten containers and mix thoroughly. For each medium, use 0.5 g to 1 g (or 0.5 mL to 1 mL as appropriate) taken from the mixed sample.

STORAGE

Store in a sterile, airtight, tamper-proof container.

LABELLING

The label states:

- the name of the active substance(s) and the mass or number of International Units of the active substance(s) that may be delivered from the container using normal technique;
- whether the preparation is intended for use in a lactating animal or a non-lactating animal;
- in the case of multidose containers, the name of any added antimicrobial preservative.

01/2008:1228

INTRARUMINAL DEVICES

Praeparationes intraruminales

The requirements of this monograph do not apply to preparations (sometimes known as boluses), such as large conventional tablets, capsules or moulded dosage forms which give immediate or prolonged release of the active substance(s). Such preparations comply with the relevant parts of the monographs on Capsules (0016) or Tablets (0478).

DEFINITION

Intraruminal devices are solid preparations each containing one or more active substances. They are intended for oral administration to ruminant animals and are designed to be retained in the rumen to deliver the active substance(s) in a continuous or pulsatile manner. The period of release of the active substance(s) may vary from days to weeks according to the nature of the formulation and/or the delivery device.

Intraruminal devices may be administered using a balling gun. Some intraruminal devices are intended to float on the surface of the ruminal fluid while others are intended to remain on the floor of the rumen or reticulum. Each device has a density appropriate for its intended purpose.

PRODUCTION

For continuous release, the intraruminal device is designed to release the active substance(s) at a defined rate over a defined period of time. This may be achieved by erosion, corrosion, diffusion, osmotic pressure or any other suitable chemical, physical or physico-chemical means.

For pulsatile-release, the intraruminal device is designed to release a specific quantity of active substance(s) at one or several defined intermediate times. This may be achieved by corrosion by ruminal fluids of the metallic elements of the intraruminal device which leads to sequential release of the constituent units which are usually in the form of tablets.

In the manufacture of intraruminal devices, measures are taken to ensure an appropriate release of the active substance(s).

In the manufacture, packaging, storage and distribution of intraruminal devices, suitable measures are taken to ensure their microbial quality; recommendations on this aspect are provided in the text on *5.1.4. Microbiological quality of non-sterile pharmaceutical preparations and substances for pharmaceutical use.*

TESTS

Uniformity of dosage units. Constituent tablet units of intraruminal devices comply with the test for uniformity of dosage units (*2.9.40*) or, where justified and authorised, with the tests for uniformity of content and/or uniformity of mass shown below. Herbal drugs and herbal drug preparations present in the dosage form are not subject to the provisions of this paragraph.

Uniformity of content (*2.9.6*). Unless otherwise justified and authorised, constituent tablet units of intraruminal devices in which the active substances are present at levels less than 2 mg or less than 2 per cent of the total mass comply with test A for uniformity of content of single-dose preparations. If the preparation contains more than one active substance, the requirement applies only to those substances which correspond to the above conditions.

Uniformity of mass (*2.9.5*). Unless otherwise justified and authorised, the constituent tablet units of intraruminal devices comply with the test for uniformity of mass. If the test for uniformity of content is prescribed for all active substances, the test for uniformity of mass is not required.

LABELLING

The label states:

- for continuous-release devices, the dose released per unit time;
- for pulsatile-release devices, the dose released at specified times.

01/2008:1806
corrected 6.3

INTRAUTERINE PREPARATIONS FOR VETERINARY USE

Praeparationes intra-uterinae ad usum veterinarium

DEFINITION

Intrauterine preparations for veterinary use are liquid, semi-solid or solid preparations intended for the direct administration to the uterus (cervix, cavity or fundus), usually in order to obtain a local effect. They contain 1 or more active substances in a suitable basis.

Where appropriate, containers for intrauterine preparations for veterinary use comply with the requirements for *Materials used for the manufacture of containers* (*3.1* and subsections) and *Containers* (*3.2* and subsections).

Several categories of intrauterine preparations for veterinary use may be distinguished:

- intrauterine tablets;
- intrauterine capsules;
- intrauterine solutions, emulsions and suspensions, concentrates for intrauterine solutions;
- tablets for intrauterine solutions and suspensions;
- semi-solid intrauterine preparations;

Dosage forms

- intrauterine foams;
- intrauterine sticks.

PRODUCTION

During the development of an intrauterine preparation for veterinary use, the effectiveness of any added antimicrobial preservative shall be demonstrated to the satisfaction of the competent authority. A suitable test method together with criteria for judging the preservative properties of the formulation are provided under *Efficacy of antimicrobial preservation* (*5.1.3*).

In the manufacture, packaging, storage and distribution of intrauterine preparations for veterinary use, suitable measures are taken to ensure their microbial quality; recommendations on this aspect are provided in the text on *5.1.4. Microbiological quality of non-sterile pharmaceutical preparations and substances for pharmaceutical use*, see Table 5.1.4.-1. – *Cutaneous use*.

Sterile intrauterine preparations for veterinary use are prepared using materials and methods designed to ensure sterility and to avoid the introduction of contaminants and the growth of microorganisms; recommendations on this aspect are provided in the text on *Methods of preparation of sterile products* (*5.1.1*).

During development, it must be demonstrated that the nominal content can be withdrawn from the container of liquid and semi-solid intrauterine preparations for veterinary use presented in single-dose containers.

TESTS

Uniformity of dosage units. Single-dose intrauterine preparations for veterinary use comply with the test for uniformity of dosage units (*2.9.40*) or, where justified and authorised, with the tests for uniformity of content and/or uniformity of mass shown below. Herbal drugs and herbal drug preparations present in the dosage form are not subject to the provisions of this paragraph.

Uniformity of content (*2.9.6*). Unless otherwise prescribed or justified and authorised, solid single-dose preparations with a content of active substance less than 2 mg or less than 2 per cent of the total mass comply with test A (intrauterine tablets) or test B (intrauterine capsules) for uniformity of content of single-dose preparations. If the preparation has more than 1 active substance, the requirement applies only to those substances which correspond to the above conditions.

Uniformity of mass (*2.9.5*). Solid single-dose intrauterine preparations for veterinary use comply with the test for uniformity of mass of single-dose preparations. If the test for uniformity of content is prescribed or justified and authorised for all the active substances, the test for uniformity of mass is not required.

Dissolution. A suitable test may be carried out to demonstrate the appropriate release of the active substance(s) from solid single-dose intrauterine preparations for veterinary use, for example one of the tests described in *Dissolution test for solid dosage forms* (*2.9.3*).

When a dissolution test is prescribed, a disintegration test may not be required.

Sterility (*2.6.1*). Sterile intrauterine preparations for veterinary use comply with the test for sterility. Applicators supplied with the preparation also comply with the test for sterility. Remove the applicator with aseptic precautions from its package and transfer it to a tube of culture medium so that it is completely immersed. Incubate and interpret the results as described in the test for sterility.

LABELLING

The label states:

- the name of any added antimicrobial preservative;
- where applicable, that the preparation is sterile.

Intrauterine tablets

DEFINITION

Intrauterine tablets are solid preparations each containing a single dose of 1 or more active substances. They generally conform to the definition given in the monograph on *Tablets (0478)*.

A suitable applicator may be used for application into the uterus.

TESTS

Disintegration. Unless intended for prolonged local action, they comply with the test for disintegration of suppositories and pessaries (*2.9.2*). Examine the state of the tablets after 30 min, unless otherwise justified and authorised.

Intrauterine capsules

DEFINITION

Intrauterine capsules are solid, single-dose preparations. They are generally similar to soft capsules, differing only in their shape and size. Intrauterine capsules have various shapes, usually ovoid. They are smooth and have a uniform external appearance.

A suitable applicator may be used for application into the uterus.

TESTS

Disintegration. Unless intended for prolonged local action, they comply with the test for disintegration of suppositories and pessaries (*2.9.2*). Examine the state of the capsules after 30 min, unless otherwise justified and authorised.

Intrauterine solutions, suspensions and emulsions Concentrates for intrauterine solutions

DEFINITION

Intrauterine solutions, suspensions and emulsions are liquid preparations. Concentrates for intrauterine solutions are intended for administration after dilution.

They may contain excipients, for example to adjust the viscosity of the preparation, to adjust or stabilise the pH, to increase the solubility of the active substance(s) or to stabilise the preparation. The excipients do not adversely affect the intended medical action, or, at the concentrations used, cause undue local irritation.

Intrauterine emulsions may show evidence of phase separation, but are readily redispersed on shaking. Intrauterine suspensions may show a sediment that is readily dispersed on shaking to give a suspension which remains sufficiently stable to enable a homogeneous preparation to be delivered.

They may be supplied in single-dose containers. The container is adapted to deliver the preparation to the uterus or it may be accompanied by a suitable applicator.

PRODUCTION

In the manufacture of intrauterine suspensions, measures are taken to ensure a suitable and controlled particle size with regard to the intended use.

Tablets for intrauterine solutions and suspensions

DEFINITION

Tablets intended for the preparation of intrauterine solutions and suspensions are single-dose preparations which are dissolved or dispersed in water at the time of administration. They may contain excipients to facilitate dissolution or dispersion or to prevent caking.

Tablets for intrauterine solutions or suspensions conform with the definition given in the monograph on *Tablets (0478)*.

After dissolution or dispersion, they comply with the requirements for intrauterine solutions or intrauterine suspensions, as appropriate.

TESTS

Disintegration (*2.9.1*). Tablets for intrauterine solutions or suspensions disintegrate within 3 min using *water R* at 15-25 °C.

LABELLING

The label states:

- the method of preparation of the intrauterine solution or suspension;
- the conditions and duration of storage of the solution or suspension after reconstitution.

Semi-solid intrauterine preparations

DEFINITION

Semi-solid preparations for intrauterine use are ointments, creams or gels.

Semi-solid preparations for intrauterine use comply with the requirements of the monograph on *Semi-solid preparations for cutaneous application (0132)*.

They are often supplied in single-dose containers. The container is adapted to deliver the preparation to the uterus or it may be accompanied by a suitable applicator.

Intrauterine foams

DEFINITION

Intrauterine foams comply with the requirements of the monograph on *Medicated foams (1105)*.

They are supplied in multidose containers. The container is adapted to deliver the preparation to the uterus or it may be accompanied by a suitable applicator.

Intrauterine sticks

DEFINITION

Intrauterine sticks comply with the requirements of the monograph on *Sticks (1154)*. They often produce a foam when coming into contact with physiological fluids.

01/2008:0927

LIQUID PREPARATIONS FOR CUTANEOUS APPLICATION

Praeparationes liquidae ad usum dermicum

Where justified and authorised, the requirements of this monograph do not apply to preparations intended for systemic and veterinary use.

DEFINITION

Liquid preparations for cutaneous application are preparations of a variety of viscosities intended for local or transdermal delivery of active ingredients. They are solutions, emulsions or suspensions that may contain 1 or more active substances in a suitable vehicle. They may contain suitable antimicrobial preservatives, antioxidants and other excipients such as stabilisers, emulsifiers and thickeners.

Emulsions may show evidence of phase separation but are readily redispersed on shaking. Suspensions may show a sediment that is readily dispersed on shaking to give a suspension that is sufficiently stable to enable a homogeneous preparation to be delivered.

Where applicable, containers for liquid preparations for cutaneous application comply with the requirements of *Materials used for the manufacture of containers* (*3.1* and subsections) and *Containers* (*3.2* and subsections).

When liquid preparations for cutaneous application are dispensed in pressurised containers, the containers comply with the requirements of the monograph on *Pressurised pharmaceutical preparations (0523)*.

Preparations specifically intended for use on severely injured skin are sterile.

Several categories of liquid preparations for cutaneous application may be distinguished, for example:

- shampoos;
- cutaneous foams.

PRODUCTION

During development of a liquid preparation for cutaneous application whose formulation contains an antimicrobial preservative, the need for and the efficacy of the chosen preservative shall be demonstrated to the satisfaction of the competent authority. A suitable test method together with criteria for judging the preservative properties of the formulation are provided in the text on *Efficacy of antimicrobial preservation* (*5.1.3*).

During development, it must be demonstrated that the nominal content can be withdrawn from the container of liquid preparations for cutaneous application presented in single-dose containers.

In the manufacture, packaging, storage and distribution of liquid preparations for cutaneous application, suitable measures are taken to ensure their microbial quality; recommendations on this aspect are provided in the text on *5.1.4. Microbiological quality of non-sterile pharmaceutical preparations and substances for pharmaceutical use*.

Sterile liquid preparations for cutaneous application are prepared using materials and methods designed to ensure sterility and to avoid the introduction of contaminants and the growth of micro-organisms; recommendations on this aspect are provided in the text on *Methods of preparation of sterile products* (*5.1.1*).

In the manufacture of liquid preparations for cutaneous application containing dispersed particles, measures are taken to ensure a suitable and controlled particle size with regard to the intended use.

TESTS

Sterility (*2.6.1*). Where the label indicates that the preparation is sterile, it complies with the test for sterility.

STORAGE

If the preparation is sterile, store in a sterile, airtight, tamper-proof container.

LABELLING

The label states:

- the name of any added antimicrobial preservative;
- where applicable, that the preparation is sterile.

Shampoos

DEFINITION

Shampoos are liquid or, occasionally, semi-solid preparations intended for application to the scalp and subsequent washing away with water. Upon rubbing with water they usually form a foam.

They are emulsions, suspensions or solutions. Shampoos normally contain surface active agents.

Cutaneous foams

DEFINITION

Cutaneous foams comply with the requirements of the monograph on *Medicated foams (1105)*.

01/2008:0672

LIQUID PREPARATIONS FOR ORAL USE

Praeparationes liquidae peroraliae

Where justified and authorised, the requirements of this monograph do not apply to liquid preparations for oral use intended for veterinary use.

DEFINITION

Liquid preparations for oral use are usually solutions, emulsions or suspensions containing one or more active substances in a suitable vehicle; they may, however, consist of liquid active substances used as such (oral liquids).

Some preparations for oral use are prepared by dilution of concentrated liquid preparations, or from powders or granules for the preparation of oral solutions or suspensions, for oral drops or for syrups, using a suitable vehicle.

The vehicle for any preparations for oral use is chosen having regard to the nature of the active substance(s) and to provide organoleptic characteristics appropriate to the intended use of the preparation.

Liquid preparations for oral use may contain suitable antimicrobial preservatives, antioxidants and other excipients such as dispersing, suspending, thickening, emulsifying, buffering, wetting, solubilising, stabilising, flavouring and sweetening agents and colouring matter, authorised by the competent authority.

Emulsions may show evidence of phase separation but are readily redispersed on shaking. Suspensions may show a sediment, which is readily dispersed on shaking to give a suspension that remains sufficiently stable to enable the correct dose to be delivered.

Where applicable, containers for liquid preparations for oral use comply with the requirements of *Materials used for the manufacture of containers* (*3.1* and subsections) and *Containers* (*3.2* and subsections).

Several categories of preparations may be distinguished;

- oral solutions, emulsions and suspensions;
- powders and granules for oral solutions and suspensions;
- oral drops;
- powders for oral drops;
- syrups;
- powders and granules for syrups.

PRODUCTION

During development of a preparation for oral use whose formulation contains an antimicrobial preservative, the need for and the efficacy of the chosen preservative shall be demonstrated to the satisfaction of the competent authority. A suitable test method together with criteria for judging the preservative properties of the formulation are provided in the text on *Efficacy of antimicrobial preservation* (*5.1.3*).

During development, it must be demonstrated that the nominal content can be withdrawn from the container, for liquid preparations for oral use presented in single-dose containers.

In the manufacturing, packaging, storage and distribution of liquid preparations for oral use, suitable measures are taken to ensure their microbial quality; recommendations on this aspect are provided in the text on *5.1.4. Microbiological quality of non-sterile pharmaceutical preparations and substances for pharmaceutical use*.

In the manufacture of liquid preparations for oral use containing dispersed particles, measures are taken to ensure a suitable and controlled particle size with regard to the intended use.

TESTS

Uniformity of dosage units. Solutions, suspensions and emulsions in single-dose containers comply with the test for uniformity of dosage units (*2.9.40*) or, where justified and authorised, with the test for uniformity of content or uniformity of mass shown below. Herbal drugs and herbal drug preparations present in the dosage form are not subject to the provisions of this paragraph.

Uniformity of content (*2.9.6*). Unless otherwise prescribed or justified and authorised, single-dose preparations that are suspensions comply with the following test. After shaking, empty each container as completely as possible and carry out the test on the individual contents. They comply with test B for uniformity of content of single-dose preparations.

Uniformity of mass. Single-dose preparations that are solutions or emulsions comply with the following test: weigh individually the contents of 20 containers, emptied as completely as possible, and determine the average mass. Not more than 2 of the individual masses deviate by more than 10 per cent from the average mass and none deviate by more than 20 per cent.

Dose and uniformity of dose of oral drops. Into a suitable graduated cylinder, introduce by means of the dropping device the number of drops usually prescribed for one dose, or introduce by means of the measuring device the usually prescribed quantity. The dropping speed does not exceed 2 drops per second. Weigh the liquid, repeat the addition, weigh again and carry on repeating the addition and weighing until a total of 10 masses are obtained. No single mass deviates by more than 10 per cent from the average mass. The total of 10 masses does not differ by more than 15 per cent from the nominal mass of 10 doses. If necessary, measure the total volume of 10 doses. The volume does not differ by more than 15 per cent from the nominal volume of 10 doses.

Uniformity of mass of delivered doses from multidose containers (*2.9.27*). Liquid preparations for oral use supplied in multidose containers comply with the test. Oral drops are not subject to the provisions of this test.

LABELLING

The label states the name of any added antimicrobial preservative.

Oral solutions, emulsions and suspensions

DEFINITION

Oral solutions, emulsions and suspensions are supplied in single-dose or multidose containers. Each dose from a multidose container is administered by means of a device suitable for measuring the prescribed volume. The device is usually a spoon or a cup for volumes of 5 mL or multiples thereof or an oral syringe for other volumes.

Powders and granules for oral solutions and suspensions

DEFINITION

Powders and granules for the preparation of oral solutions or suspensions generally conform to the definitions in the monographs on *Oral powders (1165)* or *Granules (0499)* as appropriate. They may contain excipients, in particular to facilitate dispersion or dissolution and to prevent caking.

After dissolution or suspension, they comply with the requirements for oral solutions or oral suspensions, as appropriate.

TESTS

Uniformity of dosage units. Single-dose powders and single-dose granules comply with the test for uniformity of dosage units (*2.9.40*) or, where justified and authorised, with the tests for uniformity of content and/or uniformity of mass shown below. Herbal drugs and herbal drug preparations present in the dosage form are not subject to the provisions of this paragraph.

Uniformity of content (*2.9.6*). Unless otherwise prescribed or justified and authorised, single-dose powders and single-dose granules with a content of active substance less than 2 mg or less than 2 per cent of the total mass comply with test B for uniformity of content of single-dose preparations. If the preparation has more than one active substance, the requirement applies only to those substances that correspond to the above conditions.

Uniformity of mass (*2.9.5*). Single-dose powders and single-dose granules comply with the test for uniformity of mass of single-dose preparations. If the test for uniformity of content is prescribed for all the active substances, the test for uniformity of mass is not required.

LABELLING

The label states:

- the method of preparation of the solution or suspension;
- the conditions and the duration of storage after reconstitution.

Oral drops

DEFINITION

Oral drops are solutions, emulsions or suspensions that are administered in small volumes such as drops by the means of a suitable device.

LABELLING

The label states the number of drops per millilitre of preparation or per gram of preparation if the dose is measured in drops.

Powders for oral drops

DEFINITION

Powders for the preparation of oral drops generally conform to the definition of *Oral powders (1165)*. They may contain excipients to facilitate dissolution or suspension in the prescribed liquid or to prevent caking.

After dissolution or suspension, they comply with the requirements for oral drops.

TESTS

Uniformity of dosage units. Single-dose powders for oral drops comply with the test for uniformity of dosage units (*2.9.40*) or, where justified and authorised, with the tests for uniformity of content and/or uniformity of mass shown below. Herbal drugs and herbal drug preparations present in the dosage form are not subject to the provisions of this paragraph.

Uniformity of content (*2.9.6*). Unless otherwise prescribed or justified and authorised, single-dose powders for oral drops with a content of active substance less than 2 mg or less than 2 per cent of the total mass comply with test B for uniformity of content of single-dose preparations. If the preparation has more than one active substance, the requirement applies only to those substances that correspond to the above conditions.

Uniformity of mass (*2.9.5*). Single-dose powders for oral drops comply with the test for uniformity of mass of single-dose preparations. If the test for uniformity of content is prescribed for all the active substances, the test for uniformity of mass is not required.

Syrups

DEFINITION

Syrups are aqueous preparations characterised by a sweet taste and a viscous consistency. They may contain sucrose at a concentration of at least 45 per cent *m/m*. The sweet taste can also be obtained by using other polyols or sweetening agents. Syrups usually contain aromatic or other flavouring agents. Each dose from a multidose container is administered by means of a device suitable for measuring the prescribed volume. The device is usually a spoon or a cup for volumes of 5 mL or multiples thereof.

LABELLING

The label states the name and concentration of the polyol or sweetening agent.

Powders and granules for syrups

DEFINITION

Powders and granules for syrups generally conform to the definitions in the monograph on *Oral powders (1165)* or *Granules (0499)*. They may contain excipients to facilitate dissolution.

After dissolution, they comply with the requirements for syrups.

TESTS

Uniformity of dosage units. Single-dose powders and granules for syrups comply with the test for uniformity of dosage units (*2.9.40*) or, where justified and authorised, with the tests for uniformity of content and/or uniformity of mass shown below. Herbal drugs and herbal drug preparations present in the dosage form are not subject to the provisions of this paragraph.

Uniformity of content (*2.9.6*). Unless otherwise prescribed or justified and authorised, single-dose powders and granules for syrups with a content of active substance less than 2 mg or less than 2 per cent of the total mass comply with test B for uniformity of content of single-dose preparations. If the preparation has more than one active substance, the requirement applies only to those substances that correspond to the above conditions.

Uniformity of mass (*2.9.5*). Single-dose powders and granules for syrups comply with the test for uniformity of mass of single-dose preparations. If the test for uniformity of content is prescribed for all the active substances, the test for uniformity of mass is not required.

01/2008:0676

NASAL PREPARATIONS

Nasalia

DEFINITION

Nasal preparations are liquid, semi-solid or solid preparations intended for administration to the nasal cavities to obtain a systemic or local effect. They contain one or more active substances. Nasal preparations are as far as possible non-irritating and do not adversely affect the functions of the nasal mucosa and its cilia. Aqueous nasal preparations are usually isotonic and may contain excipients, for example, to adjust the viscosity of the preparation, to adjust or stabilise the pH, to increase the solubility of the active substance, or to stabilise the preparation.

Nasal preparations are supplied in multidose or single-dose containers, provided, if necessary, with a suitable administration device, which may be designed to avoid the introduction of contaminants.

Unless otherwise justified and authorised, aqueous nasal preparations supplied in multidose containers contain a suitable antimicrobial preservative in an appropriate concentration, except where the preparation itself has adequate antimicrobial properties.

Where applicable, the containers comply with the requirements of *Materials used for the manufacture of containers* (*3.1* and subsections) and *Containers* (*3.2* and subsections).

Several categories of nasal preparations may be distinguished:

- nasal drops and liquid nasal sprays;
- nasal powders;
- semi-solid nasal preparations;
- nasal washes;
- nasal sticks.

PRODUCTION

During the development of a nasal preparation whose formulation contains an antimicrobial preservative, the efficacy of the chosen preservative shall be demonstrated to the satisfaction of the competent authority. A suitable test method together with criteria for judging the preservative properties of the formulation are provided in the text on *Efficacy of antimicrobial preservation* (*5.1.3*).

In the manufacture, packaging, storage and distribution of nasal preparations, suitable measures are taken to ensure their microbial quality; recommendations on this aspect are provided in the text on *5.1.4. Microbiological quality of non-sterile pharmaceutical preparations and substances for pharmaceutical use*.

Sterile nasal preparations are prepared using materials and methods designed to ensure sterility and to avoid the introduction of contaminants and the growth of micro-organisms; recommendations on this aspect are provided in the text on *Methods of preparation of sterile products* (*5.1.1*).

In the manufacture of nasal preparations containing dispersed particles, measures are taken to ensure a suitable and controlled particle size with regard to the intended use.

TESTS

Sterility (*2.6.1*). Where the label states that the preparation is sterile, it complies with the test for sterility.

STORAGE

If the preparation is sterile, store in a sterile, airtight, tamper-proof container.

LABELLING

The label states:

- the name of any added antimicrobial preservative;
- where applicable, that the preparation is sterile.

Nasal drops and liquid nasal sprays

DEFINITION

Nasal drops and liquid nasal sprays are solutions, emulsions or suspensions intended for instillation or spraying into the nasal cavities.

Emulsions may show evidence of phase separation but are easily redispersed on shaking. Suspensions may show a sediment, which is readily dispersed on shaking to give a suspension that remains sufficiently stable to enable the correct dose to be delivered.

Nasal drops are usually supplied in multidose containers provided with a suitable applicator.

Liquid nasal sprays are supplied in containers with atomising devices or in pressurised containers fitted with a suitable adapter and with or without a metering dose valve, which comply with the requirements of the monograph on *Pressurised pharmaceutical preparations (0523)*.

The size of droplets of the spray is such as to localise their deposition in the nasal cavity.

TESTS

Unless otherwise prescribed or justified and authorised, nasal drops supplied in single-dose containers and single doses of metered-dose nasal sprays, both intended for systemic action, comply with the following tests.

NASAL DROPS IN SINGLE-DOSE CONTAINERS

Uniformity of dosage units. Nasal drops in single-dose containers comply with the test for uniformity of dosage units (*2.9.40*) or, where justified and authorised, with the test for uniformity of mass or uniformity of content shown below. Herbal drugs and herbal drug preparations present in the dosage form are not subject to the provisions of this paragraph.

Uniformity of mass. *Nasal drops that are solutions comply with the following test.* Weigh individually the contents of 10 containers emptied as completely as possible, and determine the average mass. Not more than 2 of the individual masses deviate by more than 10 per cent from the average mass, and none deviate by more than 20 per cent.

Uniformity of content (*2.9.6*). *Nasal drops that are suspensions or emulsions comply with the following test.* Empty each container as completely as possible and carry out the test on the individual contents. They comply with test B for uniformity of content.

METERED-DOSE NASAL SPRAYS

Uniformity of dosage units. Metered-dose nasal sprays comply with the test for uniformity of dosage units (*2.9.40*) or, where justified and authorised, with the test for uniformity of mass or the test for uniformity of delivered dose shown below. Herbal drugs and herbal drug preparations present in the dosage form are not subject to the provisions of this paragraph.

In the case of metered-dose nasal sprays that are solutions, proceed as follows. Discharge once to waste. Wait for a minimum of 5 s, shake for 5 s and discharge again to waste. Repeat this procedure for a further 3 actuations. Weigh the container, discharge once to waste and weigh the container again. Calculate the difference between the 2 masses. Repeat the procedure for a further 9 containers. Determine the mass variation (*2.9.40*).

In the case of metered-dose nasal sprays that are suspensions or emulsions, proceed as follows. Use an apparatus capable of quantitatively retaining the dose leaving the actuator of the atomising device. Shake the container for 5 s and discharge once to waste. Wait for a minimum of 5 s, shake for 5 s and

Dosage forms

discharge again to waste. Repeat this procedure for a further 3 actuations. After 2 s, fire 1 dose of the metered-dose nasal spray into the collecting vessel by actuating the atomising device. Collect the contents of the collecting vessel by successive rinses. Determine the content of active substance in the combined rinses. Repeat the procedure for a further 9 containers. Determine the content uniformity (*2.9.40*).

Uniformity of mass. *Metered-dose nasal sprays that are solutions comply with the following test.* Discharge once to waste. Wait for a minimum of 5 s, shake for 5 s and discharge again to waste. Repeat this procedure for a further 3 actuations. Weigh the container, discharge once to waste and weigh the container again. Calculate the difference between the 2 masses. Repeat the procedure for a further 9 containers.

The preparation complies with the test if not more than 2 of the individual values deviate by more than 25 per cent from the average value and none deviate by more than 35 per cent.

Uniformity of delivered dose. *Metered-dose nasal sprays that are suspensions or emulsions comply with the following test.* Use an apparatus capable of quantitatively retaining the dose leaving the actuator of the atomising device. Shake the container for 5 s and discharge once to waste. Wait for a minimum of 5 s, shake for 5 s and discharge again to waste. Repeat this procedure for a further 3 actuations. After 2 s, fire 1 dose of the metered-dose nasal spray into the collecting vessel by actuating the atomising device. Collect the contents of the collecting vessel by successive rinses. Determine the content of active substance in the combined rinses. Repeat the procedure for a further 9 containers.

Unless otherwise justified and authorised, the preparation complies with the test if not more than 1 of the individual contents is outside the limits of 75 per cent to 125 per cent and none are outside the limits of 65 per cent to 135 per cent of the average content.

If 2 or at most 3 individual contents are outside the limits of 75 per cent to 125 per cent but within the limits of 65 per cent to 135 per cent, repeat the test for 20 more containers. The preparation complies with the test if not more than 3 individual contents of the 30 individual contents are outside the limits of 75 per cent to 125 per cent and none are outside the limits of 65 per cent to 135 per cent of the average content.

Nasal powders

DEFINITION

Nasal powders are powders intended for insufflation into the nasal cavity by means of a suitable device.

They comply with the requirements of the monograph on *Powders for cutaneous application (1166)*.

The size of the particles is such as to localise their deposition in the nasal cavity and is verified by adequate methods of particle-size determination.

Semi-solid nasal preparations

DEFINITION

Semi-solid nasal preparations comply with the requirements of the monograph on *Semi-solid preparations for cutaneous application (0132)*.

The containers are adapted to deliver the product to the site of application.

Nasal washes

DEFINITION

Nasal washes are generally aqueous isotonic solutions intended to cleanse the nasal cavities.

Nasal washes intended for application to injured parts or prior to a surgical operation are sterile.

PRODUCTION

During development, it must be demonstrated that the nominal content can be withdrawn from the container, for nasal washes presented in single-dose containers.

Nasal sticks

DEFINITION

Nasal sticks comply with the monograph on *Sticks (1154)*.

04/2012:1807

OROMUCOSAL PREPARATIONS

Praeparationes buccales

This monograph does not apply to dental preparations or to preparations such as chewable tablets (0478), medicated chewing gums (1239), oral lyophilisates and other solid or semi-solid preparations that are not specifically listed in this monograph. Where justified and authorised, this monograph does not apply to preparations for veterinary use.

DEFINITION

Oromucosal preparations are solid, semi-solid or liquid preparations, containing one or more active substances intended for administration to the oral cavity and/or the throat to obtain a local or systemic effect. Preparations intended for a local effect may be designed for application to a specific site within the oral cavity such as the gums (gingival preparations) or the throat (oropharyngeal preparations). Preparations intended for a systemic effect are designed to be absorbed primarily at one or more sites on the oral mucosa (e.g. sublingual preparations). Mucoadhesive preparations are intended to be retained in the oral cavity by adhesion to the mucosal epithelium and may modify systemic drug absorption at the site of application. For many oromucosal preparations, it is likely that some proportion of the active substance(s) will be swallowed and may be absorbed via the gastrointestinal tract.

Oromucosal preparations may contain suitable antimicrobial preservatives and other excipients such as dispersing, suspending, thickening, emulsifying, buffering, wetting, solubilising, stabilising, flavouring and sweetening agents. Solid preparations may in addition contain glidants, lubricants and excipients capable of modifying the release of the active substance(s).

Where applicable, containers for oromucosal preparations comply with the requirements for *Materials used for the manufacture of containers* (*3.1 and subsections*) and *Containers* (*3.2 and subsections*).

Several categories of preparations for oromucosal use may be distinguished:

- gargles;
- mouthwashes;
- gingival solutions;
- oromucosal solutions and oromucosal suspensions;
- semi-solid oromucosal preparations (including for example gingival gel, gingival paste, oromucosal gel, oromucosal paste);
- oromucosal drops, oromucosal sprays and sublingual sprays (including oropharyngeal sprays);
- lozenges and pastilles;
- compressed lozenges;
- sublingual tablets and buccal tablets;
- oromucosal capsules;
- mucoadhesive preparations;
- orodispersible films.

Dosage forms

PRODUCTION

During the development of an oromucosal preparation containing an antimicrobial preservative, the effectiveness of the chosen preservative shall be demonstrated to the satisfaction of the competent authority. A suitable test method together with the criteria for judging the preservative properties of the formulation are provided in general chapter *5.1.3. Efficacy of antimicrobial preservation*.

In the manufacture, packaging, storage and distribution of oromucosal preparations, suitable measures are taken to ensure their microbiological quality; recommendations on this aspect are provided in the text on *5.1.4. Microbiological quality of non-sterile pharmaceutical preparations and substances for pharmaceutical use*.

In the manufacture of semi-solid and liquid oromucosal preparations containing dispersed particles, measures are taken to ensure a suitable and controlled particle size with regard to the intended use.

TESTS

Uniformity of dosage units. Single-dose oromucosal preparations comply with the test for uniformity of dosage units (*2.9.40*) or, where justified and authorised, with the test for uniformity of content and/or uniformity of mass shown below. Herbal drugs and herbal drug preparations present in the dosage form are not subject to the provisions of this paragraph.

Uniformity of content (*2.9.6*). Unless otherwise prescribed or justified and authorised, single-dose oromucosal preparations with a content of active substance less than 2 mg or less than 2 per cent of the total mass comply with test A (compressed and moulded dosage forms) or test B (capsules) for the uniformity of content of single-dose preparations. If the preparation contains more than one active substance, this requirement applies only to those substances that correspond to the above conditions.

Uniformity of mass (*2.9.5*). Solid single-dose oromucosal preparations comply with the test for uniformity of mass. If the test for the uniformity of content is prescribed, or justified and authorised, for all active substances, the test for uniformity of mass is not required.

LABELLING

The label states the name of any added antimicrobial preservative.

Gargles

DEFINITION

Gargles are aqueous solutions intended for gargling to obtain a local effect. They are not to be swallowed. They are supplied as ready-to-use solutions or concentrated solutions to be diluted. They may also be prepared from powders or tablets to be dissolved in water before use.

Gargles may contain excipients to adjust the pH which, as far as possible, is neutral.

Mouthwashes

DEFINITION

Mouthwashes are aqueous solutions intended for use in contact with the mucous membrane of the oral cavity. They are not to be swallowed. They are supplied as ready-to-use solutions or concentrated solutions to be diluted. They may also be prepared from powders or tablets to be dissolved in water before use.

Mouthwashes may contain excipients to adjust the pH which, as far as possible, is neutral.

Gingival solutions

DEFINITION

Gingival solutions are intended for administration to the gingivae by means of a suitable applicator.

Oromucosal solutions and oromucosal suspensions

DEFINITION

Oromucosal solutions and oromucosal suspensions are liquid preparations intended for administration to the oral cavity by means of a suitable applicator.

Oromucosal suspensions may show a sediment which is readily dispersible on shaking to give a suspension which remains sufficiently stable to enable the correct dose to be delivered.

Semi-solid oromucosal preparations

DEFINITION

Semi-solid oromucosal preparations are hydrophilic gels or pastes intended for administration to the oral cavity or to a specific part of the oral cavity such as the gingivae (gingival gel, gingival paste). They may be provided as single-dose preparations.

Semi-solid oromucosal preparations comply with the requirements of the monograph *Semi-solid preparations for cutaneous use (0132)*.

Oromucosal drops, oromucosal sprays and sublingual sprays

DEFINITION

Oromucosal drops, oromucosal sprays and sublingual sprays are solutions, emulsions or suspensions intended for local or systemic effect. They are applied by instillation or spraying into the oral cavity or onto a specific part of the oral cavity such as spraying under the tongue (sublingual spray) or into the throat (oropharyngeal spray).

Emulsions may show evidence of phase separation but are readily redispersed on shaking. Suspensions may show a sediment which is readily dispersed on shaking to give a suspension which remains sufficiently stable to enable the correct dose to be delivered.

Liquid oromucosal sprays are supplied in containers with atomising devices or in pressurised containers having a suitable adaptor, with or without a metering dose valve, which comply with the requirements of the monograph *Pressurised pharmaceutical preparations (0523)*.

The size of the droplets of the spray is such as to localise their deposition in the oral cavity or the throat as intended.

TESTS

Unless otherwise prescribed or justified and authorised, oromucosal drops supplied in single-dose containers, single doses of metered-dose oromucosal sprays and sublingual sprays, all intended for systemic action, comply with the following tests.

OROMUCOSAL DROPS IN SINGLE-DOSE CONTAINERS

Uniformity of dosage units. Oromucosal drops in single-dose containers comply with the test for uniformity of dosage units (*2.9.40*) or, where justified and authorised, with the test for uniformity of mass or uniformity of content shown below. Herbal drugs and herbal drug preparations present in the dosage form are not subject to the provisions of this paragraph.

Uniformity of mass. *Oromucosal drops that are solutions comply with the following test*. Weigh individually the contents of 10 containers emptied as completely as possible, and

determine the average mass. Maximum 2 of the individual masses deviate by more than 10 per cent from the average mass and none deviates by more than 20 per cent.

Uniformity of content (*2.9.6*). *Oromucosal drops that are suspensions or emulsions comply with the following test.* Empty each container as completely as possible and carry out the test on the individual contents. They comply with test B of uniformity of content.

METERED-DOSE OROMUCOSAL SPRAYS AND SUBLINGUAL SPRAYS

Uniformity of dosage units. Metered-dose oromucosal sprays and sublingual sprays comply with the test for uniformity of dosage units (*2.9.40*) or, where justified and authorised, with the test for uniformity of mass or the test for uniformity of delivered dose shown below. Herbal drugs and herbal drug preparations present in the dosage form are not subject to the provisions of this paragraph.

In the case of metered-dose oromucosal sprays and sublingual sprays that are solutions, proceed as follows. Discharge once to waste. Wait for a minimum of 5 s, shake for 5 s and discharge again to waste. Repeat this procedure for a further 3 actuations. Weigh the container, discharge once to waste and weigh the container again. Calculate the difference between the 2 masses. Repeat the procedure for a further 9 containers. Determine the mass variation (*2.9.40*).

In the case of metered-dose oromucosal sprays and sublingual sprays that are suspensions or emulsions proceed as follows. Use an apparatus capable of quantitatively retaining the dose leaving the actuator of the atomising device.

Shake the container for 5 s and discharge once to waste. Wait for a minimum of 5 s, shake for 5 s and discharge again to waste. Repeat this procedure for a further 3 actuations. After 2 s, fire 1 dose of the metered-dose spray into the collecting vessel by actuating the atomising device. Collect the contents of the collecting vessel by successive rinses. Determine the content of active substance in the combined rinses. Repeat the procedure for a further 9 containers. Determine the content uniformity (*2.9.40*).

Uniformity of mass. *Metered-dose oromucosal sprays and sublingual sprays that are solutions comply with the following test.* Discharge once to waste. Wait for a minimum of 5 s, shake for 5 s and discharge again to waste. Repeat this procedure for a further 3 actuations. Weigh the container, discharge once to waste and weigh the container again. Calculate the difference between the 2 masses. Repeat the procedure for a further 9 containers.

The preparation complies with the test if maximum 2 of the individual values deviate by more than 25 per cent from the average value and none deviates by more than 35 per cent.

Uniformity of delivered dose. *Metered-dose oromucosal sprays and sublingual sprays that are suspensions or emulsions comply with the following test.* Use an apparatus capable of quantitatively retaining the dose leaving the actuator of the atomising device.

Shake the container for 5 s and discharge once to waste. Wait for a minimum of 5 s, shake for 5 s and discharge again to waste. Repeat this procedure for a further 3 actuations. After 2 s, fire 1 dose of the metered-dose spray into the collecting vessel by actuating the atomising device. Collect the contents of the collecting vessel by successive rinses. Determine the content of active substance in the combined rinses. Repeat the procedure for a further 9 containers.

Unless otherwise justified and authorised, the preparation complies with the test if maximum 1 of the individual contents is outside the limits of 75 per cent to 125 per cent and none is outside the limits of 65 per cent to 135 per cent of the average content.

If 2 or maximum 3 individual contents are outside the limits of 75 per cent to 125 per cent but within the limits of 65 per cent to 135 per cent, repeat the test for 20 more containers. The preparation complies with the test if maximum 3 individual contents of the 30 individual contents are outside the limits of 75 per cent to 125 per cent and none is outside the limits of 65 per cent to 135 per cent of the average content.

Lozenges and pastilles

DEFINITION

Lozenges and pastilles are solid, single-dose preparations intended to be sucked to obtain, usually, a local effect in the oral cavity and the throat. They contain one or more active substances, usually in a flavoured and sweetened base, and are intended to dissolve or disintegrate slowly in the mouth when sucked.

Lozenges are hard preparations prepared by moulding. Pastilles are soft, flexible preparations prepared by moulding of mixtures containing natural or synthetic polymers or gums and sweeteners.

Compressed lozenges

DEFINITION

Compressed lozenges are solid, single-dose preparations intended to be sucked to obtain a local or systemic effect. They are prepared by compression and are often rhomboid in shape.

Compressed lozenges conform with the general definition of tablets.

PRODUCTION

In the manufacture of compressed lozenges, measures are taken to ensure that they possess suitable mechanical strength to resist handling without crumbling or breaking. This may be demonstrated by examining the *Friability of uncoated tablets* (*2.9.7*) and the *Resistance to crushing of tablets* (*2.9.8*).

TESTS

Dissolution. For compressed lozenges intended for a systemic effect, a suitable test is carried out to demonstrate the appropriate release of the active substance(s).

Sublingual tablets and buccal tablets

DEFINITION

Sublingual tablets and buccal tablets are solid, single-dose preparations to be applied under the tongue or to the buccal cavity, respectively, to obtain a systemic effect. They are prepared by compression of mixtures of powders or granulations into tablets with a shape suited for the intended use.

Sublingual tablets and buccal tablets conform to the general definition of tablets.

PRODUCTION

In the manufacture of sublingual tablets and buccal tablets, measures are taken to ensure that they possess suitable mechanical strength to resist handling without crumbling or breaking. This may be demonstrated by examining the *Friability of uncoated tablets* (*2.9.7*) and the *Resistance to crushing of tablets* (*2.9.8*).

TESTS

Dissolution. Unless otherwise justified and authorised, a suitable test is carried out to demonstrate the appropriate release of the active substance(s).

Oromucosal capsules

DEFINITION

Oromucosal capsules are soft capsules to be chewed or sucked.

Mucoadhesive preparations

DEFINITION

Mucoadhesive preparations contain one or more active substances intended for systemic absorption through the buccal mucosa over a prolonged period of time. They may be supplied as mucoadhesive buccal tablets, as buccal films or as other mucoadhesive solid or semi-solid preparations. They usually contain hydrophilic polymers, which on wetting with the saliva produce a hydrogel that adheres to the buccal mucosa; in addition, buccal films may dissolve.

Mucoadhesive buccal tablets are prepared by compression and may be single- or multilayer tablets.

Buccal films are single- or multilayer sheets of suitable materials.

PRODUCTION

In the manufacture of mucoadhesive buccal tablets and of buccal films, measures are taken to ensure that they possess suitable mechanical strength to resist handling without crumbling or breaking. For mucoadhesive buccal tablets this may be demonstrated by examining the *Friability of uncoated tablets* (*2.9.7*) and the *Resistance to crushing of tablets* (*2.9.8*).

TESTS

Dissolution. Unless otherwise justified and authorised, a suitable test is carried out to demonstrate the appropriate release of the active substance(s).

Orodispersible films

DEFINITION

Orodispersible films are single- or multilayer sheets of suitable materials, to be placed in the mouth where they disperse rapidly.

PRODUCTION

In the manufacture of orodispersible films, measures are taken to ensure that they possess suitable mechanical strength to resist handling without being damaged.

TESTS

Dissolution. Unless otherwise justified and authorised, a suitable test is carried out to demonstrate the appropriate release of the active substance(s).

01/2014:0520

PARENTERAL PREPARATIONS

Parenteralia

The requirements of this monograph do not necessarily apply to products derived from human blood, to immunological preparations, or radiopharmaceutical preparations. Special requirements may apply to preparations for veterinary use depending on the species of animal for which the preparation is intended.

DEFINITION

Parenteral preparations are sterile preparations intended for administration by injection, infusion or implantation into the human or animal body.

Parenteral preparations may require the use of excipients, for example to make the preparation isotonic with respect to blood, to adjust the pH, to increase solubility, to prevent deterioration of the active substances or to provide adequate antimicrobial properties, but not to adversely affect the intended medicinal action of the preparation or, at the concentrations used, to cause toxicity or undue local irritation.

Containers for parenteral preparations are made as far as possible from materials that are sufficiently transparent to permit the visual inspection of the contents, except for implants and in other justified and authorised cases.

Where applicable, the containers for parenteral preparations comply with the requirements for *Materials used for the manufacture of containers* (*3.1* and subsections) and *Containers* (*3.2* and subsections).

Parenteral preparations are supplied in glass containers (*3.2.1*) or in other containers such as plastic containers (*3.2.2*, *3.2.2.1* and *3.2.9*) and prefilled syringes. The tightness of the container is ensured by suitable means. Closures ensure a good seal, prevent the access of micro-organisms and other contaminants and usually permit the withdrawal of a part or the whole of the contents without removal of the closure. The plastic materials or elastomers (*3.2.9*) used to manufacture the closures are sufficiently firm and elastic to allow the passage of a needle with the least possible shedding of particles. Closures for multidose containers are sufficiently elastic to ensure that the puncture is resealed when the needle is withdrawn.

Several categories of parenteral preparations may be distinguished:

- injections;
- infusions;
- concentrates for injections or infusions;
- powders for injections or infusions;
- gels for injections;
- implants.

PRODUCTION

During the development of a parenteral preparation, the formulation for which contains an antimicrobial preservative, the effectiveness of the chosen preservative shall be demonstrated to the satisfaction of the competent authority. A suitable test method together with criteria for judging the preservative properties of the formulation are provided under *Efficacy of antimicrobial preservation* (*5.1.3*).

Parenteral preparations are prepared using materials and methods designed to ensure sterility and to avoid the introduction of contaminants and the growth of micro-organisms. Recommendations on this aspect are provided in the text *Methods of preparation of sterile products* (*5.1.1*).

Water used in the manufacture of parenteral preparations complies with the requirements of water for injections in bulk stated in the monograph *Water for injections (0169)*.

TESTS

Particulate contamination: sub-visible particles (*2.9.19*). For preparations for human use, solutions for infusion or solutions for injection comply with the test.

In the case of preparations for subcutaneous or intramuscular injection, higher limits may be appropriate. Radiopharmaceutical preparations are exempt from these requirements. Preparations for which the label states that the product is to be used with a final filter are exempt from these requirements, providing it has been demonstrated that the filter delivers a solution that complies with the test.

For preparations for veterinary use, when supplied in containers with a nominal content of more than 100 mL and when the content is equivalent to a dose of more than 1.4 mL per kilogram of body mass, solutions for infusion or solutions for injection comply with the test for particulate contamination: sub-visible particles.

Sterility (*2.6.1*). Parenteral preparations comply with the test for sterility.

STORAGE

In a sterile, airtight, tamper-proof container.

LABELLING

The label states:

- the name and concentration of any added antimicrobial preservative;
- where applicable, that the solution is to be used in conjunction with a final filter;
- where applicable, that the preparation is free from bacterial endotoxins or that it is apyrogenic.

Injections

DEFINITION

Injections are sterile solutions, emulsions or suspensions. They are prepared by dissolving, emulsifying or suspending the active substance(s) and any added excipients in water, in a suitable non-aqueous liquid, that may be non-sterile where justified, or in a mixture of these vehicles.

Solutions for injection, examined under suitable conditions of visibility, are clear and practically free from particles.

Emulsions for injection do not show any evidence of phase separation. Suspensions for injection may show a sediment which is readily dispersed on shaking to give a suspension which remains sufficiently stable to enable the correct dose to be withdrawn.

Multidose preparations. Multidose aqueous injections contain a suitable antimicrobial preservative at an appropriate concentration except when the preparation itself has adequate antimicrobial properties. When a preparation for parenteral administration is presented in a multidose container, the precautions to be taken for its administration and more particularly for its storage between successive withdrawals are given.

Antimicrobial preservatives. Aqueous preparations which are prepared using aseptic precautions and which cannot be terminally sterilised may contain a suitable antimicrobial preservative in an appropriate concentration.

No antimicrobial preservative is added when:

- the volume to be injected in a single dose exceeds 15 mL, unless otherwise justified;
- the preparation is intended for administration by routes where, for medical reasons, an antimicrobial preservative is not acceptable, such as intracisternally, epidurally, intrathecally or by any route giving access to the cerebrospinal fluid, or intra- or retro-ocularly.

Such preparations are presented in single-dose containers.

PRODUCTION

In the manufacture of injections containing dispersed particles, measures are taken to ensure a suitable and controlled particle size with regard to the intended use.

Single-dose preparations. The volume of the injection in a single-dose container is sufficient to permit the withdrawal and administration of the nominal dose using a normal technique (*2.9.17*).

TESTS

Uniformity of dosage units. Single-dose suspensions for injection comply with the test for uniformity of dosage units (*2.9.40*) or, where justified and authorised, with the test for uniformity of content shown below. Herbal drugs and herbal drug preparations present in the dosage form are not subject to the provisions of this paragraph.

Uniformity of content (*2.9.6*). Unless otherwise prescribed or justified and authorised, single-dose suspensions for injection with a content of active substance less than 2 mg or less than 2 per cent of the total mass comply with test A for uniformity of content of single-dose preparations. If the preparation contains more than one active substance, the requirement applies only to those substances that correspond to the above conditions.

Bacterial endotoxins - pyrogens. A test for bacterial endotoxins (*2.6.14*) is carried out or, where justified and authorised, the test for pyrogens (*2.6.8*). Recommendations on the limits for bacterial endotoxins are given in general chapter *5.1.10*.

Preparations for human use. The preparation complies with a test for bacterial endotoxins (*2.6.14*) or with the test for pyrogens (*2.6.8*).

Preparations for veterinary use. When the volume to be injected in a single dose is 15 mL or more and is equivalent to a dose of 0.2 mL or more per kilogram of body mass, the preparation complies with a test for bacterial endotoxins (*2.6.14*) or with the test for pyrogens (*2.6.8*).

Any preparation. Where the label states that the preparation is free from bacterial endotoxins or apyrogenic, respectively, the preparation complies with a test for bacterial endotoxins (*2.6.14*) or with the test for pyrogens (*2.6.8*), respectively.

Infusions

DEFINITION

Infusions are sterile, aqueous solutions or emulsions with water as the continuous phase. They are usually made isotonic with respect to blood. They are principally intended for administration in large volume. Infusions do not contain any added antimicrobial preservative.

Solutions for infusion, examined under suitable conditions of visibility, are clear and practically free from particles.

Emulsions for infusion do not show any evidence of phase separation.

PRODUCTION

In the manufacture of infusions containing dispersed particles, measures are taken to ensure a suitable and controlled particle size with regard to the intended use.

The volume of the infusion in the container is sufficient to permit the withdrawal and administration of the nominal dose using a normal technique (*2.9.17*).

TESTS

Bacterial endotoxins - pyrogens. They comply with a test for bacterial endotoxins (*2.6.14*) or, where justified and authorised, with the test for pyrogens (*2.6.8*). For the latter test inject 10 mL per kilogram of body mass into each rabbit, unless otherwise justified and authorised.

Concentrates for injections or infusions

DEFINITION

Concentrates for injections or infusions are sterile solutions intended for injection or infusion after dilution. They are diluted to a prescribed volume with a prescribed liquid before administration. After dilution, they comply with the requirements for injections or for infusions.

TESTS

Bacterial endotoxins - pyrogens. They comply with the requirements prescribed for injections or for infusions, after dilution to a suitable volume.

Powders for injections or infusions

DEFINITION

Powders for injections or infusions are solid, sterile substances distributed in their final containers and which, when shaken with the prescribed volume of a prescribed sterile liquid rapidly form either clear and practically particle-free solutions or uniform suspensions. After dissolution or suspension, they comply with the requirements for injections or for infusions.

Freeze-dried products for parenteral administration are considered as powders for injections or infusions.

PRODUCTION

The uniformity of content and uniformity of mass of freeze-dried products for parenteral administration are ensured by the in-process control of the amount of the solution prior to freeze-drying.

TESTS

Uniformity of dosage units. Powders for injections or infusions comply with the test for uniformity of dosage units (*2.9.40*) or, where justified and authorised, with the tests for uniformity of content and/or uniformity of mass shown below. Herbal drugs and herbal drug preparations present in the dosage form are not subject to the provisions of this paragraph.

Uniformity of content (*2.9.6*). Unless otherwise prescribed or justified and authorised, powders for injections or infusions with a content of active substance less than 2 mg or less than 2 per cent of the total mass, or with a unit mass equal to or less than 40 mg comply with test A for uniformity of content of single-dose preparations. If the preparation contains more than one active substance, the requirement applies only to those substances that correspond to the above conditions.

Uniformity of mass (*2.9.5*). Powders for injections or infusions comply with the test for uniformity of mass of single-dose preparations. If the test for uniformity of content is prescribed for all the active substances, the test for uniformity of mass is not required.

Bacterial endotoxins - pyrogens. They comply with the requirements prescribed for injections or for infusions, after dissolution or suspension in a suitable volume of liquid.

LABELLING

The label states the instructions for the preparation of injections and infusions.

Dosage forms

Gels for injections

DEFINITION

Gels for injections are sterile gels with a viscosity suitable to guarantee a modified release of the active substance(s) at the site of injection.

Implants

DEFINITION

Implants are sterile, solid preparations of a size and shape suitable for parenteral implantation and release of the active substance(s) over an extended period of time. Each dose is provided in a sterile container.

TESTS

A suitable test is carried out to demonstrate the appropriate release of the active substance(s).

01/2008:1011

PATCHES, TRANSDERMAL

Emplastra transcutanea

DEFINITION

Transdermal patches are flexible pharmaceutical preparations of varying sizes, containing one or more active substances. They are intended to be applied to the unbroken skin in order to deliver the active substance(s) to the systemic circulation after passing through the skin barrier.

Transdermal patches normally consist of an outer covering which supports a preparation which contains the active substance(s). The transdermal patches are covered on the site of the release surface of the preparation by a protective liner, which is removed before applying the patch to the skin.

The outer covering is a backing sheet impermeable to the active substance(s) and normally impermeable to water, designed to support and protect the preparation. The outer covering may have the same dimensions as the preparation or it may be larger. In the latter case the overlapping border of the outer covering is covered by pressure-sensitive adhesive substances which assure the adhesion of the patch to the skin.

The preparation contains the active substance(s) together with excipients such as stabilisers, solubilisers or substances intended to modify the release rate or to enhance transdermal absorption. It may be a single layer or multi-layer solid or semi-solid matrix, and in this case it is the composition and structure of the matrix which determines the diffusion pattern of the active substance(s) to the skin. The matrix may contain pressure-sensitive adhesives which assure the adhesion of the preparation to the skin. The preparation may exist as a semi-solid reservoir one side of which is a membrane which may control the release and the diffusion of the active substance(s) from the preparation. The pressure-sensitive adhesive substances may, in this case, be applied to some or all parts of the membrane, or only around the border of the membrane of the outer covering.

When applied to the dried, clean and unbroken skin, the transdermal patch adheres firmly to the skin by gentle pressure of the hand or the fingers and can be peeled off without causing appreciable injury to the skin or detachment of the preparation from the outer covering. The patch must not be irritant or sensitising to the skin, even after repeated applications.

The protective liner generally consists of a sheet of plastic or metal material. When removed, the protective liner does not detach the preparation (matrix or reservoir) or the adhesive from the patch.

Transdermal patches are normally individually enclosed in sealed sachets.

PRODUCTION

In the manufacture, packaging, storage and distribution of transdermal patches suitable measures are taken to ensure their microbial quality; recommendations on this aspect are provided in the text on *5.1.4. Microbiological quality of non-sterile pharmaceutical preparations and substances for pharmaceutical use.*

TESTS

Uniformity of dosage units. Transdermal patches comply with the test for uniformity of dosage units (*2.9.40*) or, where justified and authorised, with the test for uniformity of content shown below. Herbal drugs and herbal drug preparations present in the dosage form are not subject to the provisions of this paragraph.

Uniformity of content (*2.9.6*). Unless otherwise prescribed or justified and authorised, transdermal patches comply with test C for uniformity of content of single-dose preparations.

Dissolution. A suitable test may be required to demonstrate the appropriate release of the active substance(s), for example one of the tests described in *Dissolution test for transdermal patches* (*2.9.4*). The disc assembly method, the cell method or the rotating cylinder method may be used, as suitable, according to the composition, dimensions and shape of the patch.

A membrane may be used. It can be of various materials, such as inert porous cellulose or silicones, and must not affect the release kinetics of the active substance(s) from the patch. Furthermore, it must be free of substances that may interfere with its performance (for example grease). The membrane may be suitably treated before the tests, for example, by maintaining it in the medium to be used in the test for 24 h. Apply the membrane above the releasing surface of the patch, avoiding the formation of air bubbles.

The test conditions and the requirements are to be authorised by the competent authority.

STORAGE

Store at room temperature, unless otherwise indicated.

LABELLING

The label states, where applicable, the total quantity of active substance(s) per patch, the dose released per unit time and the area of the releasing surface.

01/2009:1166

POWDERS FOR CUTANEOUS APPLICATION

Pulveres ad usum dermicum

Where justified and authorised, the requirements of this monograph do not apply to powders for cutaneous application intended for veterinary use.

DEFINITION

Powders for cutaneous application are preparations consisting of solid, loose, dry particles of varying degrees of fineness. They contain one or more active substances, with or without excipients and, if necessary, colouring matter authorised by the competent authority.

Powders for cutaneous application are presented as single-dose powders or multidose powders. They are free from grittiness. Powders specifically intended for use on large open wounds or on severely injured skin are sterile.

Multidose powders for cutaneous application may be dispensed in sifter-top containers, containers equipped with a mechanical spraying device or in pressurised containers.

Powders dispensed in pressurised containers comply with the requirements of *Pressurised pharmaceutical preparations (0523)*.

Where applicable, containers for powders comply with the requirements of *Materials used for the manufacture of containers* (*3.1* and subsections) and *Containers* (*3.2* and subsections).

PRODUCTION

In the manufacture of powders for cutaneous application, measures are taken to ensure a suitable particle size with regard to the intended use.

In the manufacture, packaging, storage and distribution of powders for cutaneous application, suitable measures are taken to ensure their microbial quality; recommendations on this aspect are provided in the text *5.1.4. Microbiological quality of non-sterile pharmaceutical preparations and substances for pharmaceutical use*.

Sterile powders for cutaneous application are prepared using materials and methods designed to ensure sterility and to avoid the introduction of contaminants and the growth of micro-organisms; recommendations on this aspect are provided in the text *Methods of preparation of sterile products* (*5.1.1*).

TESTS

Fineness. If prescribed, the fineness of a powder is determined by the sieve test (*2.9.35*) or another appropriate method.

Uniformity of dosage units. Single-dose powders for cutaneous application comply with the test for uniformity of dosage units (*2.9.40*) or, where justified and authorised, with the tests for uniformity of content and/or uniformity of mass shown below. Herbal drugs and herbal drug preparations present in the dosage form are not subject to the provisions of this paragraph.

Uniformity of content (*2.9.6*). Unless otherwise prescribed or justified and authorised, single-dose powders for cutaneous application with a content of active substance less than 2 mg or less than 2 per cent of the total mass comply with test B for uniformity of content of single-dose preparations. If the preparation has more than one active substance, the requirement applies only to those substances that correspond to the above conditions.

Uniformity of mass (*2.9.5*). Single-dose powders for cutaneous application comply with the test for uniformity of mass of single-dose preparations. If the test for uniformity of content is prescribed for all the active substances, the test for uniformity of mass is not required.

Sterility (*2.6.1*). Where the label indicates that the preparation is sterile, it complies with the test for sterility.

LABELLING

The label states:

- that the preparation is for external use;
- where applicable, that the preparation is sterile.

01/2008:1165

POWDERS, ORAL

Pulveres perorales

Requirements for powders to be used for the preparation of oral solutions or suspensions are given in the monograph for Liquid preparations for oral use (0672). Where justified and authorised, the requirements of this monograph do not apply to oral powders intended for veterinary use.

DEFINITION

Oral powders are preparations consisting of solid, loose, dry particles of varying degrees of fineness. They contain one or more active substances, with or without excipients and, if necessary, colouring matter authorised by the competent authority and flavouring substances. They are generally administered in or with water or another suitable liquid. They may also be swallowed directly. They are presented as single-dose or multidose preparations.

Where applicable, containers for oral powders comply with the requirements of *Materials used for the manufacture of containers* (*3.1* and subsections) and *Containers* (*3.2* and subsections).

Multidose oral powders require the provision of a measuring device capable of delivering the quantity prescribed. Each dose of a single-dose powder is enclosed in an individual container, for example a sachet or a vial.

PRODUCTION

In the manufacture of oral powders, measures are taken to ensure a suitable particle size with regard to the intended use.

In the manufacture, packaging, storage and distribution of oral powders, suitable measures are taken to ensure their microbial quality; recommendations on this aspect are provided in the text on *5.1.4. Microbiological quality of non-sterile pharmaceutical preparations and substances for pharmaceutical use*.

TESTS

Uniformity of dosage units. Single-dose oral powders comply with the test for uniformity of dosage units (*2.9.40*) or, where justified and authorised, with the tests for uniformity of content and/or uniformity of mass shown below. Herbal drugs and herbal drug preparations present in the dosage form are not subject to the provisions of this paragraph.

Uniformity of content (*2.9.6*). Unless otherwise prescribed or justified and authorised, single-dose oral powders with a content of active substance less than 2 mg or less than 2 per

cent of the total mass comply with test B for uniformity of content of single-dose preparations. If the preparation has more than one active substance, the requirement applies only to those substances which correspond to the above conditions.

Uniformity of mass (*2.9.5*). Single-dose oral powders comply with the test for uniformity of mass of single-dose preparations. If the test for uniformity of content is prescribed for all the active substances, the test for uniformity of mass is not required.

Uniformity of mass of delivered doses from multidose containers (*2.9.27*). Oral powders supplied in multidose containers comply with the test.

STORAGE

If the preparation contains volatile ingredients, or the contents have to be protected, store in an airtight container.

Effervescent powders

Effervescent powders are presented as single-dose or multidose preparations and generally contain acid substances and carbonates or hydrogen carbonates which react rapidly in the presence of water to release carbon dioxide. They are intended to be dissolved or dispersed in water before administration.

STORAGE

In an airtight container.

01/2014:1037

PREMIXES FOR MEDICATED FEEDING STUFFS FOR VETERINARY USE

Praeadmixta ad alimenta medicata ad usum veterinarium

DEFINITION

Mixtures of one or more active substances, usually in a suitable basis or vehicle, that are prepared to facilitate feeding the active substances to animals. They are used exclusively in the preparation of medicated feeding stuffs.

Premixes occur in granulated, powdered, semi-solid or liquid form. Used as powders or granules, they are free-flowing and homogeneous; any aggregates break apart during normal handling. Used in liquid form, they are homogeneous suspensions or solutions that may be obtained from thixotropic gels or structured liquids. The particle size and other properties are such as to ensure uniform distribution of the active substance(s) in the final feed. Unless otherwise justified and authorised, the instructions for use state that the concentration of a premix in granulated or powdered form is at least 0.5 per cent in the medicated feeding stuff.

PRODUCTION

In the manufacture, packaging, storage and distribution of premixes for medicated feeding stuffs for veterinary use, suitable measures are taken to ensure their microbial quality; recommendations on this aspect are provided in general chapter *5.1.4. Microbiological quality of non-sterile pharmaceutical preparations and substances for pharmaceutical use*.

Active substance. Unless already otherwise justified and authorised for existing premixes, an active substance intended for incorporation into a medicated premix:

- complies with the requirements of the relevant monograph of the European Pharmacopoeia;
- in the case of a fermentation product that is not the subject of a monograph of the European Pharmacopoeia, complies with the monograph *Products of fermentation (1468)*, notably with the section Down-stream processing.

TESTS

Loss on drying (*2.2.32*): unless otherwise justified and authorised, for premixes occurring in granulated or powdered form, maximum 15.0 per cent, determined on 3.000 g by drying in an oven at 105 °C for 2 h.

LABELLING

The label states the instructions for the preparation of the medicated feeding stuffs from the premix and the basic feed, including information on whether or not the premix can be granulated with the feed and the critical parameters (e.g. maximum temperature) that may be applied during the process.

01/2012:0671

PREPARATIONS FOR INHALATION

Inhalanda

DEFINITION

Preparations for inhalation are liquid or solid preparations intended for administration as vapours or aerosols to the lung in order to obtain a local or systemic effect. They contain one or more active substances that may be dissolved or dispersed in a suitable vehicle.

Preparations for inhalation may, depending on the type of preparation, contain propellants, cosolvents, diluents, antimicrobial preservatives, solubilising and stabilising agents, etc. These excipients do not adversely affect the functions of the mucosa of the respiratory tract or its cilia.

Suspensions and emulsions are readily dispersible on shaking and they remain sufficiently stable to enable the correct dose to be delivered.

Preparations for inhalation are supplied in multidose or single-dose containers. When supplied in pressurised containers, they comply with the requirements of the monograph *Pressurised pharmaceutical preparations (0523)*.

Preparations intended to be administered as aerosols (dispersions of solid or liquid particles in a gas) are administered by one of the following devices:

- a nebuliser;
- an inhaler (pressurised metered-dose inhaler, non-pressurised metered-dose inhaler or powder inhaler).

Several categories of preparations for inhalation may be distinguished:

- preparations to be converted into vapour;
- liquid preparations for nebulisation;
- pressurised metered-dose preparations for inhalation;
- non-pressurised metered-dose preparations for inhalation;
- inhalation powders.

PRODUCTION

During the development of a preparation for inhalation that contains an antimicrobial preservative, the effectiveness of the chosen preservative shall be demonstrated to the satisfaction of the competent authority. A suitable test method together with the criteria for judging the preservative properties of the formulation are described in general chapter *5.1.3. Efficacy of antimicrobial preservation*.

In the manufacture, packaging, storage and distribution of preparations for inhalation, suitable measures are taken to ensure their microbial quality; recommendations on this aspect are provided in general chapter *5.1.4. Microbiological quality of non-sterile pharmaceutical preparations and substances for pharmaceutical use*.

In assessing the uniformity of delivered dose of a multidose inhaler, it is not sufficient to test a single inhaler. Manufacturers must substitute procedures that take both inter- and intra-inhaler dose uniformity into account. A

suitable procedure based on the intra-inhaler test would be to collect each of the 10 specified doses at the beginning, middle and end of the number of doses stated on the label from separate inhalers.

LABELLING

For preparations administered by an inhaler, the label states:

- the delivered dose; alternatively, where the dose has been established as a metered dose or as a pre-dispensed dose, the label states either the metered dose or the pre-dispensed dose, as appropriate;
- where applicable, the number of deliveries from the inhaler to provide the minimum recommended dose;
- the number of deliveries per inhaler.

The label states, where applicable, the name of any added antimicrobial preservative.

Preparations to be converted into vapour

DEFINITION

Preparations intended to be converted into vapour are solutions, suspensions, emulsions or solid preparations. They are usually added to hot water and the vapour generated is inhaled.

Liquid preparations for nebulisation

DEFINITION

Liquid preparations for nebulisation are solutions, suspensions or emulsions intended to be converted into aerosols by nebulisers.

Liquid preparations for nebulisation in concentrated form are diluted to the prescribed volume with the prescribed liquid before use. Liquid preparations for nebulisation may also be prepared from powders.

The pH of liquid preparations for nebulisation is not lower than 3 and not higher than 10.

Liquid preparations for nebulisation supplied in multidose containers may contain a suitable antimicrobial preservative at a suitable concentration except where the preparation itself has adequate antimicrobial properties.

Liquid preparations for nebulisation supplied in multidose containers that do not contain an antimicrobial preservative, and where the preparation itself does not have adequate antimicrobial properties, are sterile and are supplied in containers preventing microbial contamination of the contents during storage and use.

Liquid preparations for nebulisation supplied in single-dose containers are sterile and preservative-free, unless otherwise justified and authorised.

Nebulisers are devices that convert liquids into aerosols by high-pressure gases, ultrasonic vibration or other methods. They allow the dose to be inhaled at an appropriate active-substance delivery rate over an extended period of time involving consecutive inspirations and with a particle size that ensures deposition of the preparation in the lungs.

Nebulisers may be breath-triggered or use other means to synchronise or modify the nebuliser operation with the patient's breathing.

PRODUCTION

The active substance delivery rate and the total active substance delivered are determined using the methods described in general chapter *2.9.44. Preparations for nebulisation: characterisation*. Where justified and authorised, a different apparatus and procedure may be used.

For liquid preparations for nebulisation that are solutions or suspensions, determine the particle-size distribution using an apparatus and procedure described in general chapter *2.9.44. Preparations for nebulisation: characterisation*. Where justified and authorised, a different apparatus and procedure may be used.

TESTS

Prepare the liquid preparation for nebulisation as directed in the instructions to the patient.

Aerodynamic assessment of nebulised aerosols. For liquid preparations for nebulisation that are suspensions, determine fine-particle mass using an apparatus and procedure described in general chapter *2.9.44. Preparations for nebulisation: characterisation*. Where justified and authorised, a different apparatus and procedure may be used.

Pressurised metered-dose preparations for inhalation

DEFINITION

Pressurised metered-dose preparations for inhalation are solutions, suspensions or emulsions supplied in containers equipped with a metering valve and which are held under pressure with (a) suitable propellant(s), which can act also as a solvent.

The delivered dose is the dose delivered from the inhaler. For some preparations the dose has been established as a metered dose. The metered dose is determined by adding the amount deposited on the inhaler to the delivered dose. It may also be determined directly.

PRODUCTION

The size of aerosol particles to be inhaled is controlled so that a consistent portion is deposited in the lungs. The fine-particle characteristics of pressurised metered-dose preparations for inhalation are determined using the method described in general chapter *2.9.18. Preparations for inhalation: aerodynamic assessment of fine particles*.

Pressurised metered-dose inhalers are tested for leakage.

TESTS

For breath-triggered pressurised metered-dose inhalers, the test conditions described below may need to be modified to ensure that actuation occurs for the inhaler under test.

Prepare the inhaler as directed in the instructions to the patient.

Uniformity of delivered dose. Pressurised metered-dose inhalers usually operate in a valve-down position. For inhalers that operate in a valve-up position, an equivalent test is applied using methods that ensure the complete collection of the delivered dose.

The dose collection apparatus must be capable of quantitatively capturing the delivered dose.

The following apparatus (Figure 0671.-1) and procedure may be used.

The apparatus consists of a filter-support base with an open-mesh filter-support, such as a stainless steel screen, a collection tube that is clamped or screwed to the filter-support base, and a mouthpiece adapter to ensure an airtight seal between the collection tube and the mouthpiece. Use a mouthpiece adapter that ensures that the front face of the inhaler mouthpiece is flush with the front face or the 2.5 mm indented shoulder of the sample collection tube, as appropriate. The vacuum connector is connected to a system comprising a vacuum source and a flow regulator. The source is adjusted to draw air through the complete assembly, including the filter and the inhaler to be tested, at 28.3 L/min (± 5 per cent). Air should be drawn continuously through the apparatus to avoid loss of the active substance into the atmosphere. The filter-support base is designed to accommodate 25 mm diameter filter disks. The filter disk and other materials used in the construction of the apparatus must be compatible with the active substance and solvents that are

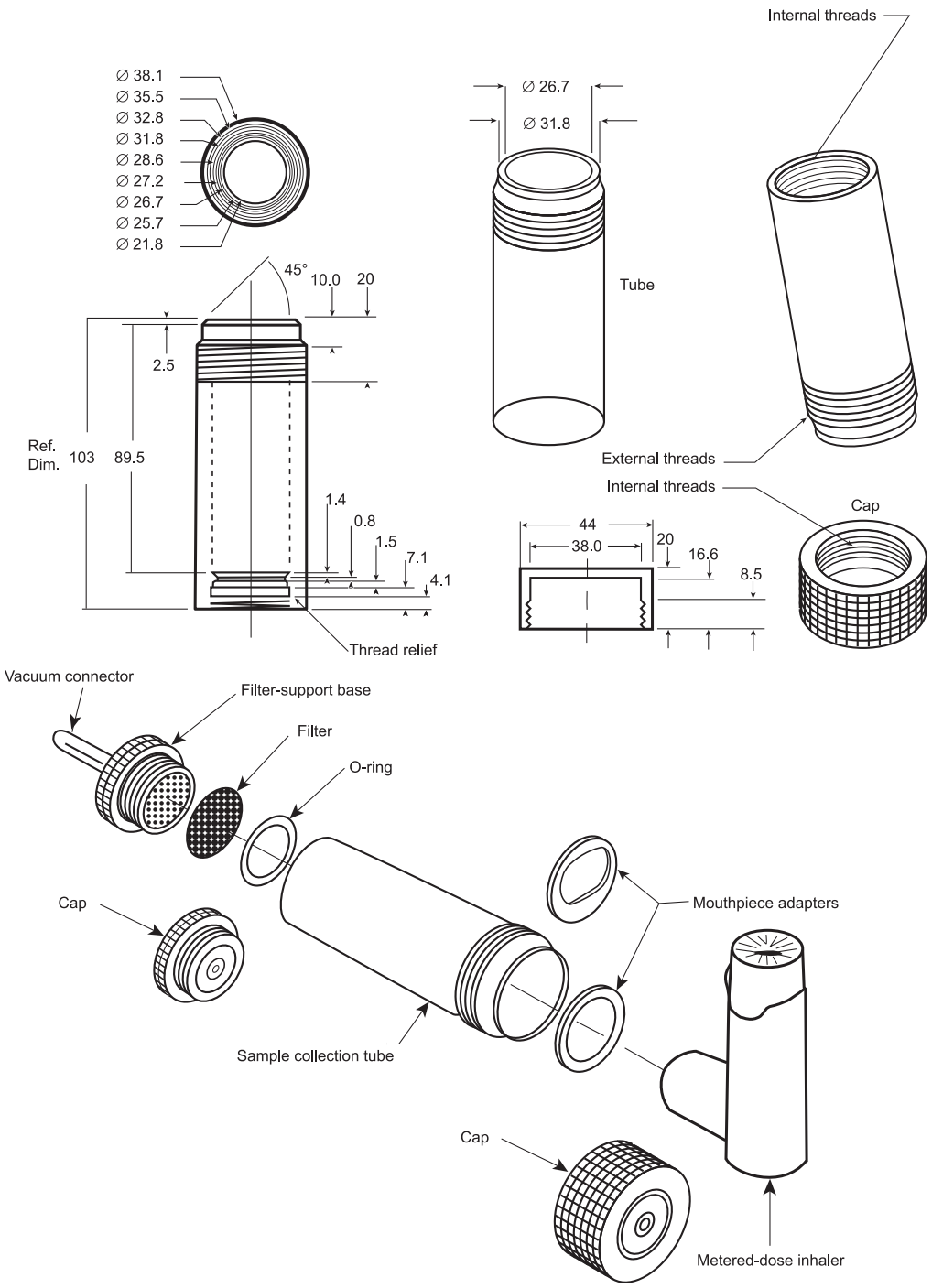

Figure 0671.-1. – *Dose collection apparatus for pressurised metered-dose inhalers*
Dimensions in millimetres

used to extract the active substance from the filter. One end of the collection tube is designed to hold the filter disk tightly against the filter-support base. When assembled, the joints between the components of the apparatus are airtight so that when a vacuum is applied to the base of the filter, all of the air drawn through the collection tube passes through the inhaler.

Unless otherwise prescribed in the instructions to the patient, shake the inhaler for 5 s and discharge 1 delivery to waste. Discharge the inverted inhaler into the apparatus, depressing the valve for a sufficient time to ensure complete discharge. Repeat the procedure until the number of deliveries that constitute the minimum recommended dose have been sampled. Quantitatively collect the contents of the apparatus and determine the amount of active substance.

Repeat the procedure for a further 2 doses.

Discharge the inhaler to waste, waiting not less than 5 s between actuations, until $(n/2) + 1$ deliveries remain, where n is the number of deliveries stated on the label. Collect 4 doses using the procedure described above.

Discharge the inhaler to waste, waiting not less than 5 s between actuations, until 3 doses remain. Collect these 3 doses using the procedure described above.

For preparations containing more than 1 active substance, carry out the test for uniformity of delivered dose for each active substance.

Unless otherwise justified and authorised, the preparation complies with the test if 9 out of 10 results lie between 75 per cent and 125 per cent of the average value and all lie between 65 per cent and 135 per cent. If 2 or 3 values lie outside the limits of 75 per cent to 125 per cent, repeat the test for 2 more

inhalers. Not more than 3 of the 30 values lie outside the limits of 75 per cent to 125 per cent and no value lies outside the limits of 65 per cent to 135 per cent.

Fine particle dose. Using an apparatus and procedure described in general chapter *2.9.18. Preparations for inhalation: aerodynamic assessment of fine particles* (apparatus C, D or E), calculate the fine particle dose.

Number of deliveries per inhaler. Take 1 inhaler and discharge the contents to waste, actuating the valve at intervals of not less than 5 s. The total number of deliveries so discharged from the inhaler is not less than the number stated on the label (this test may be combined with the test for uniformity of delivered dose).

Non-pressurised metered-dose preparations for inhalation

DEFINITION

Non-pressurised metered-dose preparations for inhalation are solutions, suspensions or emulsions for use with inhalers that convert liquids into aerosols using single or multiple liquid jets, ultrasonic vibration or other methods. The volume of liquid to be converted into an aerosol is pre-metered or metered by the inhaler so that the dose delivered from the inhaler can be inhaled with 1 or more inspirations.

Non-pressurised metered-dose preparations for inhalation supplied in multidose containers may contain a suitable antimicrobial preservative at a suitable concentration except where the preparation itself has adequate antimicrobial properties.

Non-pressurised metered-dose preparations for inhalation supplied in multidose containers that do not contain an antimicrobial preservative, and where the preparation itself does not have adequate antimicrobial properties, are sterile and are supplied in containers preventing microbial contamination of the contents during storage and use.

Non-pressurised metered-dose preparations for inhalation supplied in single-dose containers are sterile and preservative-free, unless otherwise justified and authorised.

PRODUCTION

The size of aerosol particles to be inhaled is controlled so that a consistent portion is deposited in the lung. The fine-particle characteristics of non-pressurised metered-dose preparations for inhalation are determined using the method described in general chapter *2.9.18. Preparations for inhalation: aerodynamic assessment of fine particles*. Alternatively, laser diffraction analysis may be used, when properly validated against method *2.9.18* (apparatus C, D or E).

TESTS

For breath-triggered non-pressurised metered-dose inhalers, the test conditions described below may need to be modified to ensure that actuation occurs for the inhaler under test.

Prepare the inhaler as directed in the instructions to the patient.

Uniformity of delivered dose. The dose collection apparatus must be capable of quantitatively capturing the delivered dose. The apparatus described in the test for uniformity of delivered dose for pressurised metered-dose preparations may be used.

Discharge the inhaler into the apparatus. Repeat the procedure until the number of deliveries that constitute the minimum recommended dose have been sampled. Quantitatively collect the contents of the apparatus and determine the amount of active substance.

Repeat the procedure for a further 2 doses.

Discharge the inhaler to waste until (n/2) + 1 deliveries remain, where n is the number of deliveries stated on the label. Collect 4 doses using the procedure described above.

Discharge the inhaler to waste until 3 doses remain. Collect these 3 doses using the procedure described above.

For preparations containing more than 1 active substance, carry out the test for uniformity of delivered dose for each active substance.

Unless otherwise justified and authorised, the preparation complies with the test if 9 out of 10 results lie between 75 per cent and 125 per cent of the average value and all lie between 65 per cent and 135 per cent. If 2 or 3 values lie outside the limits of 75 per cent to 125 per cent, repeat the test for 2 more inhalers. Not more than 3 of the 30 values lie outside the limits of 75 per cent to 125 per cent and no value lies outside the limits of 65 per cent to 135 per cent.

Where justified and authorised, another apparatus and procedure may be used.

Fine particle dose. Using an apparatus and procedure described in general chapter *2.9.18. Preparations for inhalation: aerodynamic assessment of fine particles* (apparatus C, D or E), calculate the fine particle dose. Use the same procedure as for pressurised inhalers with appropriate adaptation of the methodology to non-pressurised inhalers. Depending on the characteristics of the non-pressurised metered-dose preparations for inhalation, relative humidity and/or temperature may need to be controlled during the test.

Number of deliveries per inhaler. Take 1 inhaler and discharge the contents to waste. The total number of deliveries so discharged from the inhaler is not less than the number stated on the label (this test may be combined with the test for uniformity of delivered dose).

Inhalation powders

DEFINITION

Inhalation powders are supplied in single-dose or multidose containers. To facilitate their use, active substances may be combined with a suitable carrier. They are administered by powder inhalers. For pre-metered inhalers, the inhaler is loaded with powders pre-dispensed in capsules or other suitable dosage forms. For inhalers using a powder reservoir, the dose is created by a metering mechanism within the inhaler.

The delivered dose is the dose delivered from the inhaler. For some preparations, the labelled dose has been established as a metered dose or as a pre-dispensed dose. The metered dose is determined by adding the amount deposited on the inhaler to the delivered dose. It may also be determined directly.

PRODUCTION

The size of aerosol particles to be inhaled is controlled so that a consistent portion is deposited in the lung. The fine-particle characteristics of powders for inhalation are determined using the method described in general chapter *2.9.18. Preparations for inhalation: aerodynamic assessment of fine particles*.

TESTS

Prepare the inhaler as directed in the instructions to the patient.

Uniformity of delivered dose. The dose collection apparatus must be capable of quantitatively capturing the delivered dose. A dose collection apparatus similar to that described for the evaluation of pressurised metered-dose inhalers may be used provided that the dimensions of the tube and the filter can accommodate the measured flow rate. A suitable tube is defined in Table 0671.-1. Connect the tube to a flow system according to the scheme specified in Figure 0671.-2 and Table 0671.-1.

Unless otherwise stated, determine the test flow rate and duration using the dose collection tube, the associated flow system, a suitable differential pressure meter and a suitable volumetric flowmeter, calibrated for the flow leaving the meter, according to the following procedure.

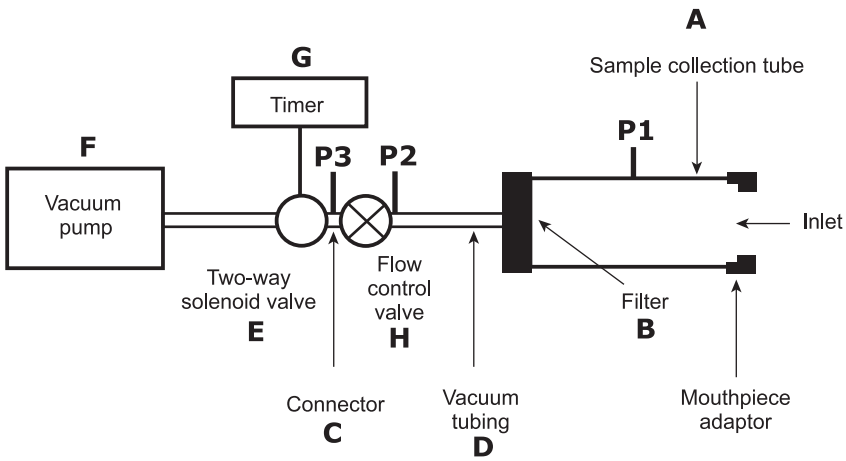

Figure 0671.-2. – *Apparatus suitable for measuring the uniformity of delivered dose for powder inhalers*

Table 0671.-1. – *Specifications of the apparatus used for powder inhalers described in Figure 0671.-2*

Code	Item	Description
A	Sample collection tube	Capable of quantitatively capturing the delivered dose, e.g. dose collection tube similar to that described in Figure 0671.-1 with dimensions of 34.85 mm ID × 12 cm length (e.g. product number XX40 047 00, Millipore Corporation, Bedford, MA 01732, USA with modified exit tube, ID ≥ 8 mm, fitted with Gelman product number 61631), or equivalent.
B	Filter	47 mm filter, e.g. A/E glass fibre filter (Gelman Sciences, Ann Arbor, MI 48106, USA), or equivalent.
C	Connector	ID ≥ 8 mm, e.g., short metal coupling, with low-diameter branch to P3.
D	Vacuum tubing	A length of suitable tubing having an ID ≥ 8 mm and an internal volume of 25 ± 5 mL.
E	2-way solenoid valve	A 2-way, 2-port solenoid valve having a minimum airflow resistance orifice with ID ≥ 8 mm and an opening time ≤ 100 ms (e.g. type 256-A08, Bürkert GmbH, 74653 Ingelfingen, Deutschland), or equivalent.
F	Vacuum pump	Pump must be capable of drawing the required flow rate through the assembled apparatus with the powder inhaler in the mouthpiece adapter (e.g. product type 1023, 1423 or 2565, Gast Manufacturing Inc., Benton Harbor, MI 49022, USA), or equivalent. Connect the pump to the 2-way solenoid valve using short and/or wide (≥ 10 mm ID) vacuum tubing and connectors to minimise pump capacity requirements.
G	Timer	Timer capable of driving the 2-way solenoid valve for the required time period (e.g. type G814, RS Components International, Corby, NN17 9RS, UK), or equivalent.
P1	Pressure tap	2.2 mm ID, 3.1 mm OD, flush with internal surface of the sample collection tube, centred and burr-free, 59 mm from its inlet. The pressure tap P1 must never be open to the atmosphere. Differential pressure to atmosphere is measured at P1.
P2 P3	Pressure measurements	Absolute pressures.
H	Flow control valve	Adjustable regulating valve with maximum C*v* ≥ 1 (e.g. type 8FV12LNSS, Parker Hannifin plc., Barnstaple, EX31 1NP, UK), or equivalent.

Prepare the inhaler for use and connect it to the inlet of the apparatus using a mouthpiece adapter to ensure an airtight seal. Use a mouthpiece adapter that ensures that the front face of the inhaler mouthpiece is flush with the front face of the sample collection tube. Connect one port of a differential pressure meter to the pressure reading point P1 in Figure 0671.-2, and let the other be open to the atmosphere. Switch on the pump, open the 2-way solenoid valve and adjust the flow control valve until the pressure drop across the inhaler is 4.0 kPa (40.8 cm H_2O) as indicated by the differential pressure meter. Remove the inhaler from the mouthpiece adapter and, without touching the flow control valve, connect a flowmeter to the inlet of the sampling apparatus. Use a flowmeter calibrated for the volumetric flow leaving the meter, or calculate the volumetric flow leaving the meter (Q_{out}) using the ideal gas law. For a meter calibrated for the entering volumetric flow (Q_{in}), use the following expression:

$$Q_{out} = \frac{Q_{in} \times P_0}{P_0 - \Delta P}$$

P_0 = atmospheric pressure,

ΔP = pressure drop over the meter.

If the flow rate is above 100 L/min adjust the flow control valve to obtain a flow rate of 100 L/min (± 5 per cent). Note the volumetric airflow rate exiting the meter and define this as the test flow rate, Q_{out}, in litres per minute. Define the test flow duration, *T*, in seconds so that a volume of 4 L of air is drawn from the mouthpiece of the inhaler at the test flow rate, Q_{out}.

Ensure that critical flow occurs in the flow control valve by the following procedure: with the inhaler in place and the test flow rate Q_{out}, measure the absolute pressure on both sides of the control valve (pressure reading points P2 and P3 in Figure 0671.-2); a ratio P3/P2 of less than or equal to 0.5 indicates critical flow; switch to a more powerful pump and re-measure the test flow rate if critical flow is not indicated.

Pre-dispensed systems. Connect the inhaler to the apparatus using an adapter that ensures a good seal. Draw air through the inhaler using the predetermined conditions. Repeat the procedure until the number of deliveries that constitute the minimum recommended dose have been sampled. Quantitatively collect the contents of the apparatus and determine the amount of active substance.

Repeat the procedure for a further 9 doses.

Reservoir systems. Connect the inhaler to the apparatus using an adapter that ensures a good seal. Draw air through the inhaler under the predetermined conditions. Repeat the procedure until the number of deliveries that constitute the minimum recommended dose have been sampled. Quantitatively collect the contents of the apparatus and determine the amount of active substance.

Repeat the procedure for a further 2 doses.

Discharge the inhaler to waste until (*n*/2) + 1 deliveries remain, where *n* is the number of deliveries stated on the label. If necessary, store the inhaler to discharge electrostatic charges. Collect 4 doses using the procedure described above.

Discharge the inhaler to waste until 3 doses remain. If necessary, store the inhaler to discharge electrostatic charges. Collect 3 doses using the procedure described above.

For preparations containing more than 1 active substance, carry out the test for uniformity of delivered dose for each active substance.

Results. The preparation complies with the test if 9 out of 10 results lie between 75 per cent and 125 per cent of the average value and all lie between 65 per cent and 135 per cent. If 2 or 3 values lie outside the limits of 75 per cent to 125 per cent, repeat the test for 2 more inhalers. Not more than 3 of the 30 values lie outside the limits of 75 per cent to 125 per cent and no value lies outside the limits of 65 per cent to 135 per cent.

In justified and authorised cases, these ranges may be extended but no value should be greater than 150 per cent or less than 50 per cent of the average value.

Fine particle dose. Using an apparatus and procedure described in general chapter *2.9.18. Preparations for inhalation: aerodynamic assessment of fine particles* (apparatus C, D or E), calculate the fine particle dose.

Number of deliveries per inhaler for multidose inhalers. Discharge doses from the inhaler until empty, at the predetermined flow rate. Record the deliveries discharged. The total number of deliveries so discharged from the inhaler is not less than the number stated on the label (this test may be combined with the test for uniformity of delivered dose).

01/2008:1116

PREPARATIONS FOR IRRIGATION

Praeparationes ad irrigationem

DEFINITION

Preparations for irrigation are sterile, aqueous, large-volume preparations intended to be used for irrigation of body cavities, wounds and surfaces, for example during surgical procedures.

Preparations for irrigation are either solutions prepared by dissolving one or more active substances, electrolytes or osmotically active substances in water complying with the requirements for *Water for injections (0169)* or they consist of such water alone. In the latter case, the preparation may be labelled as 'water for irrigation'. Irrigation solutions are usually adjusted to make the preparation isotonic with respect to blood.

Examined in suitable conditions of visibility, preparations for irrigation are clear and practically free from particles.

Preparations for irrigation are supplied in single-dose containers. The containers and closures comply with the requirements for containers for preparations for parenteral administration (*3.2.1* and *3.2.2*), but the administration port of the container is incompatible with intravenous administration equipment and does not allow the preparation for irrigation to be administered with such equipment.

PRODUCTION

Preparations for irrigation are prepared using materials and methods designed to ensure sterility and to avoid the introduction of contaminants and the growth of micro-organisms; recommendations on this aspect are provided in the text on *Methods of preparation of sterile products* (*5.1.1*).

During development, it must be demonstrated that the nominal content can be withdrawn from the container.

TESTS

Sterility (*2.6.1*). Preparations for irrigation comply with the test for sterility.

Bacterial endotoxins (*2.6.14*): less than 0.5 IU/mL.

Pyrogens (*2.6.8*). Preparations for which a validated test for bacterial endotoxins cannot be carried out comply with the test for pyrogens. Inject per kilogram of the rabbit's mass 10 mL of the preparation, unless otherwise justified and authorised.

LABELLING

The label states:

- that the preparation is not to be used for injection;
- that the preparation is to be used on one occasion only and that any unused portion of the preparation is to be discarded.

01/2008:0523

PRESSURISED PHARMACEUTICAL PREPARATIONS

Praeparationes pharmaceuticae in vasis cum pressu

Additional requirements for preparations presented in pressurised containers may be found, where appropriate, in other general monographs, for example Preparations for inhalation (0671), Liquid preparations for cutaneous application (0927), Powders for cutaneous application (1166), Nasal preparations (0676) and Ear preparations (0652).

DEFINITION

Pressurised pharmaceutical preparations are presented in special containers under pressure of a gas and contain one or more active substances. The preparations are released from the container, upon actuation of an appropriate valve, in the form of an aerosol (dispersion of solid or liquid particles in a gas, the size of the particles being adapted to the intended use) or of a liquid or semisolid jet such as a foam. The pressure for the release is generated by suitable propellants.

The preparations consist of a solution, an emulsion or a suspension and are intended for local application to the skin or to mucous membranes of various body orifices, or for inhalation. Suitable excipients may also be used, for example solvents, solubilisers, emulsifying agents, suspending agents and lubricants for the valve to prevent clogging.

Propellants. The propellants are either gases liquefied under pressure or compressed gases or low-boiling liquids. Liquefied gases are, for example, fluorinated hydrocarbons and low-molecular-mass hydrocarbons (such as propane and butane). Compressed gases are, for example, carbon dioxide, nitrogen and nitrous oxide.

Mixtures of these propellants may be used to obtain optimal solution properties and desirable pressure, delivery and spray characteristics.

Containers. The containers are tight and resistant to the internal pressure and may be made of metal, glass, plastic or combinations of these materials. They are compatible with their contents. Glass containers are protected with a plastic coating.

Spraying device. The valve keeps the container tightly closed when not in use and regulates the delivery of the contents during use. The spray characteristics are influenced by the type of spraying device, in particular by the dimensions, number and location of orifices. Some valves provide a continuous release, others ("metering dose valves") deliver a defined quantity of product upon each valve actuation.

The various valve materials in contact with the contents are compatible with them.

Requirements for pressurised pharmaceutical preparations. Pressurised preparations are provided with a delivery device appropriate for the intended application.

Special requirements may be necessary for the selection of propellants, for particle size and the single-dose delivered by the metering valves.

LABELLING

The label states:

- the method of use;
- any precautions to be taken;
- for a container with a metering dose valve, the amount of active substance in a unit-spray.

01/2008:1145
corrected 7.6

RECTAL PREPARATIONS

Rectalia

DEFINITION

Rectal preparations are intended for rectal use in order to obtain a systemic or local effect, or they may be intended for diagnostic purposes.

Where applicable, containers for rectal preparations comply with the requirements for materials used for the manufacture of containers (*3.1* and subsections) and containers (*3.2* and subsections).

Several categories of rectal preparations may be distinguished:

- suppositories;
- rectal capsules;
- rectal solutions, emulsions and suspensions;
- powders and tablets for rectal solutions and suspensions;
- semi-solid rectal preparations;
- rectal foams;
- rectal tampons.

PRODUCTION

During the development of a rectal preparation whose formulation contains an antimicrobial preservative, the need for and the efficacy of the chosen preservative shall be demonstrated to the satisfaction of the competent authority. A suitable test method together with criteria for judging the preservative properties of the formulation are provided in chapter *5.1.3. Efficacy of antimicrobial preservation*.

During development, it must be demonstrated that the nominal contents can be withdrawn from the container of liquid and semi-solid rectal preparations presented in single-dose containers.

In the manufacture, packaging, storage and distribution of rectal preparations, suitable measures are taken to ensure their microbial quality; recommendations on this aspect are provided in chapter *5.1.4. Microbiological quality of pharmaceutical preparations*.

In the manufacture of semi-solid and liquid rectal preparations containing dispersed particles, measures are taken to ensure a suitable and controlled particle size with regard to the intended use.

TESTS

Uniformity of dosage units (*2.9.40*). Liquid and semi-solid single-dose rectal preparations comply with the test. Solid single-dose rectal preparations comply with the test or, where justified and authorised, with the tests for uniformity of content and/or uniformity of mass shown below. Herbal drugs and herbal drug preparations present in the dosage form are not subject to the provisions of this paragraph.

Uniformity of content (*2.9.6*). Unless otherwise prescribed or justified and authorised, solid single-dose rectal preparations with a content of active substance less than 2 mg or less than 2 per cent of the total mass comply with test A (tablets) or test B (suppositories, rectal capsules). If the preparation contains more than one active substance, this requirement applies only to those substances that correspond to the above conditions.

Uniformity of mass (*2.9.5*). Solid single-dose rectal preparations comply with the test. If the test for uniformity of content is prescribed for all active substances, the test for uniformity of mass is not required.

Dissolution. A suitable test may be required to demonstrate the appropriate release of the active substance(s) from solid single-dose rectal preparations, for example *2.9.42. Dissolution test for lipophilic solid dosage forms*.

Where a dissolution test is prescribed, a disintegration test may not be required.

LABELLING

The label states the name of any added antimicrobial preservative.

Suppositories

DEFINITION

Suppositories are solid, single-dose preparations. The shape, volume and consistency of suppositories are suitable for rectal administration.

They contain 1 or more active substances dispersed or dissolved in a suitable basis that may be soluble or dispersible in water or may melt at body temperature. Excipients such as diluents, adsorbents, surface-active agents, lubricants, antimicrobial preservatives and colouring matter, authorised by the competent authority, may be added if necessary.

PRODUCTION

Suppositories are prepared by compression or moulding. If necessary, the active substance(s) are previously ground and sieved through a suitable sieve. When prepared by moulding, the medicated mass, sufficiently liquefied by heating, is poured into suitable moulds. The suppository solidifies on cooling. Various excipients are available for this process, such as hard fat, macrogols, cocoa butter, and various gelatinous mixtures consisting of, for example, gelatin, water and glycerol. The determination of the softening time of lipophilic suppositories (*2.9.22*) is carried out.

A suitable test is carried out to demonstrate the appropriate release of the active substance(s) from suppositories intended for modified release or for prolonged local action.

In the manufacture of suppositories containing dispersed active substances, measures are taken to ensure a suitable and controlled particle size.

TESTS

Disintegration (*2.9.2*). Unless intended for modified release or for prolonged local action, they comply with the test. For suppositories with a fatty base, examine after 30 min, and for suppositories with a water-soluble base, examine after 60 min, unless otherwise justified and authorised.

Rectal capsules

DEFINITION

Rectal capsules (shell suppositories) are solid, single-dose preparations generally similar to soft capsules as defined in the monograph *Capsules (0016)* except that they may have lubricating coatings. They are of elongated shape, are smooth and have a uniform external appearance.

PRODUCTION

A suitable test is carried out to demonstrate the appropriate release of the active substance(s) from rectal capsules intended for modified release or for prolonged local action.

TESTS

Disintegration (*2.9.2*). Unless intended for modified release or for prolonged local action, they comply with the test. Examine the state of the capsules after 30 min, unless otherwise justified and authorised.

Rectal solutions, emulsions and suspensions

DEFINITION

Rectal solutions, emulsions and suspensions are liquid preparations intended for rectal use in order to obtain a systemic or local effect, or they may be intended for diagnostic purposes.

Rectal solutions, emulsions and suspensions are supplied in single-dose containers and contain 1 or more active substances dissolved or dispersed in water, glycerol or macrogols or other suitable solvents. Emulsions may show evidence of phase separation but are readily redispersed on shaking. Suspensions may show a sediment that is readily dispersible on shaking to give a suspension that remains sufficiently stable to enable the correct dose to be delivered.

Rectal solutions, emulsions and suspensions may contain excipients, for example to adjust the viscosity of the preparation, to adjust or stabilise the pH, to increase the solubility of the active substance(s) or to stabilise the preparation. These substances do not adversely affect the intended medical action or, at the concentrations used, cause undue local irritation.

Rectal solutions, emulsions and suspensions are supplied in containers containing a volume in the range of 2.5 mL to 2000 mL. The container is adapted to deliver the preparation to the rectum or is accompanied by a suitable applicator.

Powders and tablets for rectal solutions and suspensions

DEFINITION

Powders and tablets intended for the preparation of rectal solutions or suspensions are single-dose preparations that are dissolved or dispersed in water or other suitable solvents at the time of administration. They may contain excipients to facilitate dissolution or dispersion or to prevent aggregation of the particles.

After dissolution or suspension, they comply with the requirements for rectal solutions or rectal suspensions, as appropriate.

TESTS

Disintegration (*2.9.1*). Tablets for rectal solutions or suspensions disintegrate within 3 min, using *water R* at 15-25 °C as the liquid medium.

LABELLING

The label states:

- the method of preparation of the rectal solution or suspension;
- the conditions and duration of storage of the solution or suspension after constitution.

Semi-solid rectal preparations

DEFINITION

Semi-solid rectal preparations are ointments, creams or gels.

They are often supplied as single-dose preparations in containers provided with a suitable applicator.

Semi-solid rectal preparations comply with the requirements of the monograph *Semi-solid preparations for cutaneous application (0132)*.

Rectal foams

DEFINITION

Rectal foams comply with the requirements of the monograph *Medicated foams (1105)*.

Rectal tampons

DEFINITION

Rectal tampons are solid, single-dose preparations intended to be inserted into the lower part of the rectum for a limited time.

They comply with the requirements of the monograph *Medicated tampons (1155)*.

04/2010:0132

SEMI-SOLID PREPARATIONS FOR CUTANEOUS APPLICATION

Praeparationes molles ad usum dermicum

The requirements of this monograph apply to all semi-solid preparations for cutaneous application. Where appropriate, additional requirements specific to semi-solid preparations intended to be applied to particular surfaces or mucous membranes may be found in other general monographs, for example Ear preparations (0652), Nasal preparations (0676), Rectal preparations (1145), Eye preparations (1163) and Vaginal preparations (1164).

DEFINITION

Semi-solid preparations for cutaneous application are intended for local or transdermal delivery of active substances, or for their emollient or protective action. They are of homogeneous appearance.

Semi-solid preparations for cutaneous application consist of a simple or compound basis in which, usually, 1 or more active substances are dissolved or dispersed. According to its composition, the basis may influence the activity of the preparation.

The basis may consist of natural or synthetic substances and may be single phase or multiphase. According to the nature of the basis, the preparation may have hydrophilic or hydrophobic properties; it may contain suitable excipients such as antimicrobial preservatives, antioxidants, stabilisers, emulsifiers, thickeners and penetration enhancers.

Semi-solid preparations for cutaneous application intended for use on severely injured skin are sterile.

Where applicable, containers for semi-solid preparations for cutaneous application comply with the requirements of *Materials used for the manufacture of containers* (*3.1* and subsections) and *Containers* (*3.2* and subsections).

Several categories of semi-solid preparations for cutaneous application may be distinguished:

- ointments;
- creams;
- gels;
- pastes;
- poultices;
- medicated plasters;
- cutaneous patches.

According to their structure, ointments, creams and gels generally show viscoelastic behaviour and are non-Newtonian in character, e.g. plastic, pseudoplastic or thixotropic type flow at high shear rates. Pastes frequently exhibit dilatancy.

PRODUCTION

During development of semi-solid preparations for cutaneous application whose formulation contains an antimicrobial preservative, the need for and the efficacy of the chosen preservative shall be demonstrated to the satisfaction of the competent authority. A suitable test method together with criteria for judging the preservative properties of the formulation are provided in *Efficacy of antimicrobial preservation* (*5.1.3*). In the manufacture, packaging, storage and distribution of semi-solid preparations for cutaneous application, suitable measures are taken to ensure their microbiological quality; recommendations on this are provided in *5.1.4. Microbiological quality of non-sterile pharmaceutical preparations and substances for pharmaceutical use*. Sterile semi-solid preparations for cutaneous application are prepared using materials and methods designed to ensure sterility and to avoid the introduction of contaminants and the growth of micro-organisms; recommendations on this are provided in *Methods of preparation of sterile products* (*5.1.1*).

During development, it must be demonstrated that the nominal content can be withdrawn from the container of semi-solid preparations for cutaneous application presented in single-dose containers.

In the manufacture of semi-solid preparations for cutaneous application, suitable measures are taken to ensure that the defined rheological properties are fulfilled. Where appropriate, the following non-mandatory tests may be carried out: measurement of consistency by penetrometry (*2.9.9*), viscosity (apparent viscosity) (*2.2.10*) and a suitable test to demonstrate the appropriate release of the active substance(s).

In the manufacture of semi-solid preparations for cutaneous application containing 1 or more active substances that are not dissolved in the basis (e.g. emulsions or suspensions), measures are taken to ensure appropriate homogeneity of the preparation to be delivered.

In the manufacture of semi-solid preparations for cutaneous application containing dispersed particles, measures are taken to ensure a suitable and controlled particle size with regard to the intended use.

TESTS

Uniformity of dosage units. Semi-solid preparations that are supplied either in single-dose containers that represent 1 dose of medicinal product or in metered-dose containers, and that are intended for transdermal delivery of the active substance(s) in view of a systemic effect, comply with the test for uniformity of dosage units (*2.9.40*). Semi-solid preparations in which the active substance(s) are dissolved comply with the test for mass variation; semi-solid preparations in which the active substance(s) are suspended comply with the test for content uniformity. Follow the procedure described for liquid dosage forms. Herbal drugs and herbal drug preparations present in the dosage form are not subject to the provisions of this paragraph.

For semi-solid preparations presented in metered-dose containers and in which the active substance(s) are dissolved, proceed as follows. Discharge once to waste. Wait for a minimum of 5 s, shake for 5 s if necessary, and discharge again to waste. Repeat this procedure for a further 3 actuations. Weigh the container, discharge once to waste and weigh the container again. Calculate the difference between the 2 masses. Repeat the procedure for a further 9 containers. Determine the mass variation (*2.9.40*).

For semi-solid preparations supplied in metered-dose containers and in which the active substance(s) are suspended, proceed as follows. Use an apparatus capable of quantitatively retaining the dose leaving the metered-dose container. Shake 1 container for 5 s and discharge once to waste. Wait for a minimum of 5 s, shake for 5 s and discharge again to waste. Repeat this procedure for a further 3 actuations. After 2 s, fire 1 dose from the metered-dose container into the collecting vessel. Collect the contents of the collecting vessel by successive rinses. Determine the content of active substance in the combined rinses. Repeat the procedure for a further 9 containers. Determine the content uniformity (*2.9.40*).

Sterility (*2.6.1*). Where the label indicates that the preparation is sterile, it complies with the test for sterility.

STORAGE

If the preparation contains water or other volatile ingredients, store in an airtight container. If the preparation is sterile, store in a sterile, airtight, tamper-proof container.

LABELLING

The label states:

- the name of any excipient;
- where applicable, that the preparation is sterile.

Ointments

DEFINITION

An ointment consists of a single-phase basis in which solids or liquids may be dispersed.

Hydrophobic ointments

Hydrophobic ointments can absorb only small amounts of water. Typical bases used for their formulation are hard, liquid and light liquid paraffins, vegetable oils, animal fats, synthetic glycerides, waxes and liquid polyalkylsiloxanes.

Water-emulsifying ointments

Water-emulsifying ointments can absorb larger amounts of water and thereby produce water-in-oil or oil-in-water emulsions after homogenisation, depending on the nature of the emulsifiers: water-in-oil emulsifying agents such as wool alcohols, sorbitan esters, monoglycerides and fatty alcohols, or oil-in-water emulsifying agents such as sulfated fatty alcohols, polysorbates, macrogol cetostearyl ether or esters of fatty acids with macrogols may be used for this purpose. Their bases are those of the hydrophobic ointments.

Hydrophilic ointments

Hydrophilic ointments are preparations having bases that are miscible with water. The bases usually consist of mixtures of liquid and solid macrogols (polyethylene glycols). They may contain appropriate amounts of water.

Creams

DEFINITION

Creams are multiphase preparations consisting of a lipophilic phase and an aqueous phase.

Lipophilic creams

Lipophilic creams have as the continuous phase the lipophilic phase. They usually contain water-in-oil emulsifying agents such as wool alcohols, sorbitan esters and monoglycerides.

Hydrophilic creams

Hydrophilic creams have as the continuous phase the aqueous phase. They contain oil-in-water emulsifying agents such as sodium or trolamine soaps, sulfated fatty alcohols, polysorbates and polyoxyl fatty acid and fatty alcohol esters combined, if necessary, with water-in-oil emulsifying agents.

Gels

DEFINITION

Gels consist of liquids gelled by means of suitable gelling agents.

Lipophilic gels

Lipophilic gels (oleogels) are preparations whose bases usually consist of liquid paraffin with polyethylene or fatty oils gelled with colloidal silica or aluminium or zinc soaps.

Hydrophilic gels

Hydrophilic gels (hydrogels) are preparations whose bases usually consist of water, glycerol or propylene glycol gelled with suitable gelling agents such as poloxamers, starch, cellulose derivatives, carbomers and magnesium-aluminium silicates.

Pastes

DEFINITION

Pastes are semi-solid preparations for cutaneous application containing large proportions of solids finely dispersed in the basis.

Poultices

DEFINITION

Poultices consist of a hydrophilic heat-retentive basis in which solid or liquid active substances are dispersed. They are usually spread thickly on a suitable dressing and heated before application to the skin.

Medicated plasters

DEFINITION

Medicated plasters are flexible preparations containing 1 or more active substances. They are intended to be applied to the skin. They are designed to maintain the active substance(s) in close contact with the skin such that these may be absorbed slowly, or act as protective or keratolytic agents.

Medicated plasters consist of an adhesive basis, which may be coloured, containing 1 or more active substances, spread as a uniform layer on an appropriate support made of natural or synthetic material. They are not irritant or sensitising to the skin. The adhesive layer is covered by a suitable protective liner, which is removed before applying the plaster to the skin. When removed, the protective liner does not detach the preparation from the outer, supporting layer.

Medicated plasters are presented in a range of sizes directly adapted to their intended use or as larger sheets to be cut before use. Medicated plasters adhere firmly to the skin when gentle pressure is applied and can be peeled off without causing appreciable injury to the skin or detachment of the preparation from the outer, supporting layer.

TESTS

Dissolution. A suitable test may be required to demonstrate the appropriate release of the active substance(s), for example one of the tests described in *Dissolution test for transdermal patches* (*2.9.4*).

Cutaneous patches

DEFINITION

Cutaneous patches are flexible preparations containing 1 or more active substances. They are intended to be applied to the skin. They are designed to maintain the active substance(s) in close contact with the skin such that these may act locally.

Cutaneous patches consist of an adhesive basis, which may be coloured, containing 1 or more active substances, spread as a uniform layer on an appropriate support made of natural or synthetic material. The adhesive basis is not irritant or sensitising to the skin. The adhesive layer is covered by a suitable protective liner, which is removed before applying the patch to the skin. When removed, the protective liner does not detach the preparation from the outer, supporting layer.

Cutaneous patches are presented in a range of sizes adapted to their intended use. They adhere firmly to the skin when gentle pressure is applied and can be peeled off without causing appreciable injury to the skin or detachment of the preparation from the outer, supporting layer.

TESTS

Dissolution. A suitable test may be required to demonstrate the appropriate release of the active substance(s), for example one of the tests described in *Dissolution test for transdermal patches* (*2.9.4*).

01/2008:1154

STICKS

Styli

Additional requirements for sticks may be found, where appropriate, in other general monographs, for example Nasal preparations (0676).

DEFINITION

Sticks are solid preparations intended for local application. They are rod-shaped or conical preparations consisting of one or more active substances alone or which are dissolved or dispersed in a suitable basis which may dissolve or melt at body temperature.

Urethral sticks and sticks for insertion into wounds are sterile.

PRODUCTION

In the manufacture, packaging, storage and distribution of sticks, suitable measures are taken to ensure their microbial quality; recommendations on this aspect are provided in the text on *5.1.4. Microbiological quality of non-sterile pharmaceutical preparations and substances for pharmaceutical use*.

Urethral sticks and other sterile sticks are prepared using materials and methods designed to ensure sterility and to avoid the introduction of contaminants and the growth of micro-organisms; recommendations on this aspect are provided in the text on *Methods of preparation of sterile products* (*5.1.1*).

In the manufacture of sticks measures are taken to ensure that the preparation complies with a test for mass uniformity or, where appropriate, a test for uniformity of content.

TESTS

Sterility (*2.6.1*). Urethral sticks and sticks for insertion into wounds comply with the test for sterility.

LABELLING

The label states:

- the quantity of active substance(s) per stick;
- for urethral sticks and sticks to be inserted into wounds that they are sterile.

01/2014:0478

TABLETS

Compressi

The requirements of this monograph do not necessarily apply to preparations that are presented as tablets intended for use other than by oral administration. Requirements for such preparations may be found, where appropriate, in other general monographs; for example Rectal preparations (1145), Vaginal preparations (1164) and Oromucosal preparations (1807). This monograph does not apply to lozenges, oral pastes and oral gums. Where justified and authorised, the requirements of this monograph do not apply to tablets for veterinary use.

DEFINITION

Tablets are solid preparations each containing a single dose of one or more active substances. They are obtained by compressing uniform volumes of particles or by another

Dosage forms

suitable manufacturing technique, such as extrusion, moulding or freeze-drying (lyophilisation). Tablets are intended for oral administration. Some are swallowed whole, some after being chewed, some are dissolved or dispersed in water before being administered and some are retained in the mouth where the active substance is liberated.

The particles consist of one or more active substances with or without excipients such as diluents, binders, disintegrating agents, glidants, lubricants, substances capable of modifying the behaviour of the preparation in the digestive tract, colouring matter authorised by the competent authority and flavouring substances.

Tablets are usually straight, circular solid cylinders, the end surfaces of which are flat or convex and the edges of which may be bevelled. They may have break-marks and may bear a symbol or other markings. Tablets may be coated.

Where applicable, containers for tablets comply with the requirements for materials used for the manufacture of containers (*3.1* and subsections) and containers (*3.2* and subsections).

Several categories of tablets for oral use may be distinguished:

- uncoated tablets;
- coated tablets;
- gastro-resistant tablets;
- modified-release tablets;
- effervescent tablets;
- soluble tablets;
- dispersible tablets;
- orodispersible tablets;
- chewable tablets;
- tablets for use in the mouth;
- oral lyophilisates.

PRODUCTION

Tablets are usually prepared by compressing uniform volumes of particles or particle aggregates produced by granulation methods. In the manufacture of tablets, measures are taken to ensure that they possess a suitable mechanical strength to avoid crumbling or breaking on handling or subsequent processing. This may be demonstrated using the tests described in general chapters *2.9.7. Friability of uncoated tablets* and *2.9.8. Resistance to crushing of tablets*.

Subdivision of tablets. Tablets may bear a break-mark or break-marks and may be subdivided in parts, either to ease the intake of the medicinal product or to comply with the posology. In the latter case, subdivision must be assessed and authorised by the competent authority. In order to ensure that the patient will receive the intended dose, the efficacy of the break-mark(s) must be assessed during the development of the product, in respect of uniformity of mass of the subdivided parts. Each authorised dose must be tested using the following test.

Take 30 tablets at random, break them by hand and, from all the parts obtained from 1 tablet, take 1 part for the test and reject the other part(s). Weigh each of the 30 parts individually and calculate the average mass. The tablets comply with the test if not more than 1 individual mass is outside the limits of 85 per cent to 115 per cent of the average mass. The tablets fail to comply with the test if more than 1 individual mass is outside these limits, or if 1 individual mass is outside the limits of 75 per cent to 125 per cent of the average mass.

In the manufacture, packaging, storage and distribution of tablets, suitable measures are taken to ensure their microbiological quality; recommendations on this aspect are provided in general chapter *5.1.4. Microbiological quality of non-sterile pharmaceutical preparations and substances for pharmaceutical use*.

TESTS

Uniformity of dosage units (*2.9.40*). Tablets comply with the test or, where justified and authorised, with the tests for uniformity of content and/or uniformity of mass shown below. Herbal drugs and herbal drug preparations present in the dosage form are not subject to the provisions of this paragraph.

Uniformity of content (*2.9.6*). Unless otherwise prescribed or justified and authorised, tablets with a content of active substance less than 2 mg or less than 2 per cent of the total mass comply with test A. If the preparation has more than 1 active substance, the requirement applies only to those substances that correspond to the above conditions.

Unless otherwise justified and authorised, coated tablets other than film-coated tablets comply with test A irrespective of their content of active substance(s).

Uniformity of mass (*2.9.5*). Uncoated tablets and, unless otherwise justified and authorised, film-coated tablets comply with the test. If the test for uniformity of content is prescribed or justified and authorised for all the active substances, the test for uniformity of mass is not required.

Dissolution. A suitable test may be carried out to demonstrate the appropriate release of the active substance(s), for example one of the tests described in general chapter *2.9.3. Dissolution test for solid dosage forms*.

Where a dissolution test is prescribed, a disintegration test may not be required.

Uncoated tablets

DEFINITION

Uncoated tablets include single-layer tablets resulting from a single compression of particles and multi-layer tablets consisting of concentric or parallel layers obtained by successive compression of particles of different composition. The excipients used are not specifically intended to modify the release of the active substance in the digestive fluids.

Uncoated tablets conform to the general definition of tablets. A broken section, when examined under a lens, shows either a relatively uniform texture (single-layer tablets) or a stratified texture (multi-layer tablets) but no signs of coating.

TESTS

Disintegration (*2.9.1*). Uncoated tablets comply with the test using *water R* as the liquid medium. Add a disc to each tube. Operate the apparatus for 15 min, unless otherwise justified and authorised, and examine the state of the tablets. If the tablets fail to comply because of adherence to the discs, the results are invalid. Repeat the test on a further 6 tablets, omitting the discs.

Coated tablets

DEFINITION

Coated tablets are tablets covered with one or more layers of mixtures of various substances such as natural or synthetic resins, gums, gelatin, inactive and insoluble fillers, sugars, plasticisers, polyols, waxes, colouring matter authorised by the competent authority and sometimes flavouring substances and active substances. The substances used as coatings are usually applied as a solution or suspension in conditions in which evaporation of the vehicle occurs. When the coating is a very thin polymeric coating, the tablets are known as film-coated tablets.

Coated tablets have a smooth surface, which is often coloured and may be polished; a broken section, when examined under a lens, shows a core surrounded by one or more continuous layers with a different texture.

PRODUCTION

Where justified, uniformity of mass or uniformity of content of coated tablets other than film-coated tablets may be ensured by control of the cores.

TESTS

Disintegration (*2.9.1*). Coated tablets other than film-coated tablets comply with the test using *water R* as the liquid medium. Add a disc to each tube. Operate the apparatus for 60 min, unless otherwise justified and authorised, and examine the state of the tablets. If any of the tablets has not disintegrated, repeat the test on a further 6 tablets, replacing *water R* with *0.1 M hydrochloric acid*. If 1 or 2 tablets fail to disintegrate, repeat the test on 12 additional tablets.

The requirements of the test are met if not fewer than 16 of the 18 tablets tested have disintegrated.

Film-coated tablets comply with the disintegration test prescribed above except that the apparatus is operated for 30 min, unless otherwise justified and authorised.

If coated tablets or film-coated tablets fail to comply because of adherence to the discs, the results are invalid. Repeat the test on a further 6 tablets, omitting the discs.

Gastro-resistant tablets

DEFINITION

Gastro-resistant tablets are delayed-release tablets that are intended to resist the gastric fluid and to release their active substance(s) in the intestinal fluid. Usually they are prepared from granules or particles already covered with a gastro-resistant coating or in certain cases by covering tablets with a gastro-resistant coating (enteric-coated tablets).

Tablets covered with a gastro-resistant coating conform to the definition of coated tablets.

PRODUCTION

For tablets prepared from granules or particles already covered with a gastro-resistant coating, a suitable test is carried out to demonstrate the appropriate release of the active substance(s).

TESTS

Disintegration (*2.9.1*). Tablets covered with a gastro-resistant coating comply with the test with the following modifications. Use *0.1 M hydrochloric acid* as the liquid medium. Operate the apparatus for 2 h, or another such time as may be justified and authorised, without the discs, and examine the state of the tablets. The time of resistance to the acid medium varies according to the formulation of the tablets to be examined. It is typically 2 h to 3 h but even with authorised deviations is not less than 1 h. No tablet shows signs of either disintegration (apart from fragments of coating) or cracks that would allow the escape of the contents. Replace the acid by *phosphate buffer solution pH 6.8 R* and add a disc to each tube. Operate the apparatus for 60 min and examine the state of the tablets. If the tablets fail to comply because of adherence to the discs, the results are invalid. Repeat the test on a further 6 tablets, omitting the discs.

Dissolution. For tablets prepared from granules or particles already covered with a gastro-resistant coating, a suitable test is carried out to demonstrate the appropriate release of the active substance(s), for example the test described in general chapter *2.9.3. Dissolution test for solid dosage forms*.

Modified-release tablets

DEFINITION

Modified-release tablets are coated or uncoated tablets that contain special excipients or are prepared by special procedures, or both, designed to modify the rate, the place or the time at which the active substance(s) are released.

Modified-release tablets include prolonged-release tablets, delayed-release tablets and pulsatile-release tablets.

PRODUCTION

A suitable test is carried out to demonstrate the appropriate release of the active substance(s).

Effervescent tablets

DEFINITION

Effervescent tablets are uncoated tablets generally containing acid substances and carbonates or hydrogen carbonates, which react rapidly in the presence of water to release carbon dioxide. They are intended to be dissolved or dispersed in water before administration.

TESTS

Disintegration. Place 1 tablet in a beaker containing 200 mL of *water R* at 15-25 °C; numerous bubbles of gas are evolved. When the evolution of gas around the tablet or its fragments ceases the tablet has disintegrated, being either dissolved or dispersed in the water so that no agglomerates of particles remain. Repeat the operation on 5 other tablets. The tablets comply with the test if each of the 6 tablets used disintegrates in the manner prescribed within 5 min, unless otherwise justified and authorised.

Soluble tablets

DEFINITION

Soluble tablets are uncoated or film-coated tablets. They are intended to be dissolved in water before administration. The solution produced may be slightly opalescent due to the added excipients used in the manufacture of the tablets.

TESTS

Disintegration (*2.9.1*). Soluble tablets disintegrate within 3 min, using *water R* at 15-25 °C as the liquid medium.

Dispersible tablets

DEFINITION

Dispersible tablets are uncoated or film-coated tablets intended to be dispersed in water before administration, giving a homogeneous dispersion.

TESTS

Disintegration (*2.9.1*). Dispersible tablets disintegrate within 3 min, using *water R* at 15-25 °C as the liquid medium.

Fineness of dispersion. Place 2 tablets in 100 mL of *water R* and stir until completely dispersed. A smooth dispersion is produced, which passes through a sieve screen with a nominal mesh aperture of 710 µm.

Orodispersible tablets

DEFINITION

Orodispersible tablets are uncoated tablets intended to be placed in the mouth where they disperse rapidly before being swallowed.

TESTS

Disintegration (*2.9.1*). Orodispersible tablets disintegrate within 3 min, using *water R* as the liquid medium.

Chewable tablets

DEFINITION

Chewable tablets are intended to be chewed before being swallowed.

PRODUCTION

Chewable tablets are prepared to ensure that they are easily crushed by chewing.

Tablets for use in the mouth

DEFINITION

Tablets for use in the mouth are usually uncoated tablets. They are formulated to effect a slow release and local action of the active substance(s) or the release and absorption of the active substance(s) at a defined part of the mouth. They comply with the requirements of the monograph *Oromucosal preparations (1807)*.

Oral lyophilisates

DEFINITION

Oral lyophilisates are solid preparations intended either to be placed in the mouth or to be dispersed (or dissolved) in water before administration.

PRODUCTION

Oral lyophilisates are obtained by freeze-drying (lyophilisation), involving division into single doses, freezing, sublimation and drying of usually aqueous, liquid or semi-solid preparations.

TESTS

Disintegration. Place 1 oral lyophilisate in a beaker containing 200 mL of *water R* at 15-25 °C. It disintegrates within 3 min. Repeat the test on 5 other oral lyophilisates. They comply with the test if all 6 have disintegrated.

Water (*2.5.12*). Oral lyophilisates comply with the test; the limits are approved by the competent authority.

01/2008:1155

TAMPONS, MEDICATED

Tamponae medicatae

Additional requirements for medicated tampons may be found, where appropriate, in other general monographs, for example Rectal preparations (1145), Vaginal preparations (1164) and Ear preparations (0652).

DEFINITION

Medicated tampons are solid, single-dose preparations intended to be inserted into the body cavities for a limited period of time. They consist of a suitable material such as cellulose, collagen or silicone impregnated with one or more active substances.

PRODUCTION

In the manufacture, packaging, storage and distribution of medicated tampons, suitable measures are taken to ensure their microbial quality; recommendations on this aspect are provided in the text on *5.1.4. Microbiological quality of non-sterile pharmaceutical preparations and substances for pharmaceutical use*.

LABELLING

The label states the quantity of active substance(s) per tampon.

01/2008:1164
corrected 7.6

VAGINAL PREPARATIONS

Vaginalia

DEFINITION

Vaginal preparations are liquid, semi-solid or solid preparations intended for administration to the vagina usually in order to obtain a local effect. They contain 1 or more active substances in a suitable basis.

Where appropriate, containers for vaginal preparations comply with the requirements for materials used for the manufacture of containers (*3.1* and subsections) and containers (*3.2* and subsections).

Several categories of vaginal preparations may be distinguished:

- pessaries;
- vaginal tablets;
- vaginal capsules;
- vaginal solutions, emulsions and suspensions;
- tablets for vaginal solutions and suspensions;
- semi-solid vaginal preparations;
- vaginal foams;
- medicated vaginal tampons.

PRODUCTION

During development, it must be demonstrated that the nominal contents can be withdrawn from the container of liquid and semi-solid vaginal preparations presented in single-dose containers.

In the manufacturing, packaging, storage and distribution of vaginal preparations, suitable measures are taken to ensure their microbial quality; recommendations on this aspect are provided in chapter *5.1.4. Microbiological quality of pharmaceutical preparations*.

TESTS

Uniformity of dosage units (*2.9.40*). Liquid and semi-solid single-dose vaginal preparations comply with the test. Solid single-dose vaginal preparations comply with the test or, where justified and authorised, with the tests for uniformity of content and/or uniformity of mass shown below. Herbal drugs and herbal drug preparations present in the dosage form are not subject to the provisions of this paragraph.

Uniformity of content (*2.9.6*). Unless otherwise prescribed or justified and authorised, solid single-dose vaginal preparations with a content of active substance less than 2 mg or less than 2 per cent of the total mass comply with test A (vaginal tablets) or test B (pessaries, vaginal capsules). If the preparation has more than one active substance, the requirement applies only to those substances which correspond to the above conditions.

Uniformity of mass (*2.9.5*). Solid single-dose vaginal preparations comply with the test. If the test for uniformity of content is prescribed for all the active substances, the test for uniformity of mass is not required.

Dissolution. A suitable test may be carried out to demonstrate the appropriate release of the active substance(s) from solid single-dose vaginal preparations, for example one of the tests described in chapter *2.9.3. Dissolution test for solid dosage forms* or in *2.9.42. Dissolution test for lipophilic solid dosage forms*.

When a dissolution test is prescribed, a disintegration test may not be required.

Pessaries

DEFINITION

Pessaries are solid, single-dose preparations. They have various shapes, usually ovoid, with a volume and consistency suitable for insertion into the vagina. They contain 1 or more active substances dispersed or dissolved in a suitable basis that may be soluble or dispersible in water or may melt at body temperature. Excipients such as diluents, adsorbents, surface-active agents, lubricants, antimicrobial preservatives and colouring matter authorised by the competent authority may be added, if necessary.

PRODUCTION

Pessaries are usually prepared by moulding. Where appropriate in the manufacture of pessaries, measures are taken to ensure a suitable and controlled particle size of the active substance(s). If necessary, the active substance(s) are previously ground and sieved through a suitable sieve.

When prepared by moulding, the medicated mass, sufficiently liquefied by heating, is poured into suitable moulds. The pessary solidifies on cooling. Various excipients are available for this process, such as hard fat, macrogols, cocoa butter, and various gelatinous mixtures consisting, for example, of gelatin, water and glycerol.

A suitable test is carried out to demonstrate the appropriate release of the active substance(s) from pessaries intended for prolonged local action.

TESTS

Disintegration (*2.9.2*). Unless intended for prolonged local action, they comply with the test. Examine the state of the pessaries after 60 min, unless otherwise justified and authorised.

Vaginal tablets

DEFINITION

Vaginal tablets are solid, single-dose preparations. They generally conform to the definitions of uncoated or film-coated tablets given in the monograph *Tablets (0478)*.

PRODUCTION

A suitable test is carried out to demonstrate the appropriate release of the active substance(s) from vaginal tablets intended for prolonged local action.

TESTS

Disintegration (*2.9.2*). Unless intended for prolonged local action, they comply with the test (special method for vaginal tablets). Examine the state of the tablets after 30 min, unless otherwise justified and authorised.

Vaginal capsules

DEFINITION

Vaginal capsules (shell pessaries) are solid, single-dose preparations. They are generally similar to soft capsules as defined in the monograph *Capsules (0016)*, differing only in their shape and size. Vaginal capsules have various shapes, usually ovoid. They are smooth and have a uniform external appearance.

PRODUCTION

A suitable test is carried out to demonstrate the appropriate release of the active substance(s) from vaginal capsules intended for prolonged local action.

TESTS

Disintegration (*2.9.2*). Unless intended for prolonged local action, they comply with the test. Examine the state of the capsules after 30 min, unless otherwise justified and authorised.

Vaginal solutions, emulsions and suspensions

DEFINITION

Vaginal solutions, emulsions and suspensions are liquid preparations intended for a local effect, for irrigation or for diagnostic purposes. They may contain excipients, for example to adjust the viscosity of the preparation, to adjust or stabilise the pH, to increase the solubility of the active substance(s) or to stabilise the preparation. The excipients do not adversely affect the intended medical action or, at the concentrations used, cause undue local irritation.

Vaginal emulsions may show evidence of phase separation but are readily redispersed on shaking. Vaginal suspensions may show a sediment that is readily dispersed on shaking to give a suspension that remains sufficiently stable to enable a homogeneous preparation to be delivered.

They are supplied in single-dose containers. The container is adapted to deliver the preparation to the vagina or it is accompanied by a suitable applicator.

PRODUCTION

In the manufacture of vaginal suspensions measures are taken to ensure a suitable and controlled particle size with regard to the intended use.

Tablets for vaginal solutions and suspensions

DEFINITION

Tablets intended for the preparation of vaginal solutions and suspensions are single-dose preparations that are dissolved or dispersed in water at the time of administration. They may contain excipients to facilitate dissolution or dispersion or to prevent caking.

Apart from the test for disintegration, tablets for vaginal solutions or suspensions conform with the definition for *Tablets (0478)*.

After dissolution or dispersion, they comply with the requirements for vaginal solutions or vaginal suspensions, as appropriate.

TESTS

Disintegration (*2.9.1*). Tablets for vaginal solutions or suspensions disintegrate within 3 min, using *water R* at 15-25 °C as the liquid medium.

LABELLING

The label states:

- the method of preparation of the vaginal solution or suspension;
- the conditions and duration of storage of the solution or suspension after constitution.

Semi-solid vaginal preparations

DEFINITION

Semi-solid vaginal preparations are ointments, creams or gels.

They are often supplied in single-dose containers. The container is provided with a suitable applicator.

Semi-solid vaginal preparations comply with the requirements of the monograph *Semi-solid preparations for cutaneous application (0132)*.

Vaginal foams

DEFINITION

Vaginal foams comply with the requirements of the monograph *Medicated foams (1105)*.

Medicated vaginal tampons

DEFINITION

Medicated vaginal tampons are solid, single-dose preparations intended to be inserted in the vagina for a limited time.

They comply with the requirements of the monograph *Medicated tampons (1155)*.

04/2012:1808

VETERINARY LIQUID PREPARATIONS FOR CUTANEOUS APPLICATION

Praeparationes liquidae veterinariae ad usum dermicum

Unless otherwise justified and authorised, veterinary liquid preparations for cutaneous application comply with the requirements of the monograph on Liquid preparations for cutaneous application (0927). In addition to these requirements, the following statements apply to veterinary liquid preparations for cutaneous application.

DEFINITION

Veterinary liquid preparations for cutaneous application are liquid preparations intended to be applied to the skin to obtain a local and/or systemic effect. They are solutions, suspensions or emulsions which may contain one or more active substances in a suitable vehicle. They may be presented as concentrates in the form of wettable powders, pastes, solutions or suspensions, which are used to prepare diluted suspensions or emulsions of active substances. They may contain suitable antimicrobial preservatives, antioxidants and other excipients such as stabilisers, emulsifiers and thickeners.

Several categories of veterinary liquid preparations for cutaneous application may be distinguished:

- cutaneous foams (see *Liquid preparations for cutaneous application (0927)*);
- dip concentrates;
- pour-on preparations;
- shampoos (see *Liquid preparations for cutaneous application (0927)*);
- spot-on preparations;
- sprays;
- teat dips;
- teat sprays;
- udder-washes.

Dip concentrates

DEFINITION

Dip concentrates are preparations containing one or more active substances, usually in the form of wettable powders, pastes, solutions or suspensions, which are used to prepare diluted solutions, suspensions or emulsions of active substances. The diluted preparations are applied by complete immersion of the animal.

Pour-on preparations

DEFINITION

Pour-on preparations contain one or more active substances for the prevention and treatment of ectoparasitic and/or endoparasitic infestations of animals. They are applied in volumes which are usually greater than 5 mL by pouring along the animal's dorsal midline.

Spot-on preparations

DEFINITION

Spot-on preparations contain one or more active substances for the prevention and treatment of ectoparasitic and/or endoparasitic infestations of animals. They are applied in volumes which are usually less than 10 mL, to a small area on the head or back, as appropriate, of the animal.

Sprays

DEFINITION

Sprays contain one or more active substances that are intended to be applied externally for therapeutic or prophylactic purposes. They are delivered in the form of an aerosol by the actuation of an appropriate valve or by means of a suitable atomising device that is either an integral part of the container or is supplied separately.

Sprays may be presented in pressurised containers (see *Pressurised pharmaceutical preparations (0523)*). When so presented, sprays usually consist of one or more active substances in a suitable vehicle held under pressure with suitable propellants or suitable mixtures of propellants. When otherwise presented, sprays are supplied in well-closed containers.

PRODUCTION

During the development and manufacture of a spray, measures are taken to ensure that the assembled product conforms to a defined spray rate and spray pattern.

Teat dips

DEFINITION

Teat dips contain one or more disinfectant active substances, usually in the form of solutions into which the teats of an animal are dipped pre- and post-milking, as appropriate, to reduce the population of pathogenic micro-organisms on the surfaces. Teat dips may be supplied/presented as ready-to-use preparations or they may be prepared by dilution of teat dip concentrates. Pre- and post-milking teat dips often differ in formulation. Teat dips usually contain emollients to promote skin hydration, to soften the skin and allow healing of lesions that would otherwise harbour bacteria.

Teat sprays

DEFINITION

Teat sprays contain one or more disinfectant active substances, usually in the form of solutions which are sprayed onto the teats of an animal pre- and post-milking, as appropriate, to reduce the population of pathogenic micro-organisms on the surfaces. Teat sprays may be supplied/presented as ready-to-use preparations or they may be prepared by dilution of teat spray concentrates. Pre- and post-milking sprays often differ in formulation. Teat sprays usually contain emollients to promote skin hydration, to soften the skin and allow healing of lesions that would otherwise harbour bacteria.

Udder-washes

DEFINITION

Udder-washes contain one or more disinfectant active substances, usually in the form of solutions which are sprayed onto the udder and teats of an animal to remove mud and faecal contamination before the application of teat dips or sprays. Udder-washes are usually prepared by the dilution either of concentrated preparations or of ready-to-use teat dips or teat sprays.

01/2008:2188

ANTHRAX VACCINE FOR HUMAN USE (ADSORBED, PREPARED FROM CULTURE FILTRATES)

Vaccinum anthracis adsorbatum ab colato culturarum ad usum humanum

DEFINITION

Anthrax vaccine for human use (adsorbed, prepared from culture filtrates) is a preparation of *Bacillus anthracis* antigens precipitated by aluminium potassium sulfate. The antigens are prepared from a sterile culture filtrate produced by a non-encapsulated strain, either avirulent or attenuated, of *B. anthracis*.

The main virulence components of *B. anthracis* are the polyglutamic aicd capsule and 2 binary anthrax toxins, namely lethal toxin and oedema toxin, formed from the respective combination of protective antigen (PA) with either lethal factor (LF) or oedema factor (EF).

LF is a zinc-dependent endopeptidase and EF is a potent calmodulin and calcium-dependent adenylate cyclase. Cell-free cultures of *B. anthracis* contain PA and because expression of the 3 toxin-component genes is co-ordinately regulated, LF and EF are also present. In addition, the vaccine is likely to contain many other *B. anthracis* antigens, including membrane proteins, secreted proteins, cytoplasmic proteins, peptidoglycans, nucleic acids and carbohydrates.

PRODUCTION

GENERAL PROVISIONS

Cultures are managed in a seed-lot system. The vaccine strain is toxigenic but lacks the plasmid with the necessary genes for synthesis of the capsule, an important virulence factor.

The production method must be shown to yield a consistent and active product with a safety and efficacy profile that is adequate or equivalent to previous lots. The vaccine must show a level of protection against a virulent strain of *B. anthracis*, in a suitable animal infection model, that is equal to or greater than that of a reference vaccine. The vaccine must not show a level of toxicity that exceeds that of a reference vaccine.

The production method and stability of the final lot and relevant intermediates are evaluated using one or more indicator tests. Such tests include potency and specific toxicity, and may be supported by tests confirming the presence of relevant antigens and associated proteins. Release and shelf-life specifications are established based upon the results of stability testing so as to ensure satisfactory product performance during the approved period of validity.

SEED LOTS

The attenuated non-encapsulated strain of *B. anthracis* used is identified by historical records that include information on its origin and subsequent manipulation and the tests used to characterise the strain. These include morphological, cultural, biochemical and genetic properties of the strain. Only a master seed lot or, where applicable, working seed lots, that comply with the following requirements may be used.

Identification. Each seed lot is identified as containing *B. anthracis*.

Phenotypic parameters. Each seed lot must have a known biochemical and enzymatic profile and have a known history of absence of antibiotic resistance.

Microbial purity. Each seed lot complies with the requirements for absence of contaminating organisms. Purity of bacterial cultures is verified by methods of suitable sensitivity.

Virulence test. The absence of bacterial capsule is demonstrated for each seed lot by McFadyean stain and the specific toxicity (oedema) test.

REFERENCE PREPARATION

The potency and toxicity of the vaccine bulk are verified using reference standards derived from representative vaccine batches. These batches are extensively characterised for their intended purpose and are stored in suitably sized aliquots under conditions ensuring their stability.

PROPAGATION AND HARVEST

The attenuated strain is grown using suitable liquid media. At the end of cultivation, the purity of the culture is tested. The culture medium is separated from the bacterial mass by filtration. The pH of the filtrate is determined after dilution with a 0.9 g/L solution of *sodium chloride R* and is shown to be within limits suitable for stability. A suitable test for absence of live *B. anthracis*, including spores, is carried out. Aluminium potassium sulfate or an alternative adjuvant may be added at this stage. An antimicrobial preservative may be added to the suspension to form the purified harvest.

Only a purified harvest that complies with the following requirements may be used in the preparation of the final lot.

Immunological identity. Confirm the presence of *B. anthracis* protective antigen by a suitable immunochemical method (*2.7.1*).

Antimicrobial preservative. Determine the amount of antimicrobial preservative by a suitable chemical method. The amount is not less than 85 per cent and not greater than 115 per cent of the intended content.

FINAL BULK VACCINE

The purified harvest is diluted aseptically with sterile saline solution to make the final bulk vaccine.

Only a final bulk vaccine that complies with the following requirement may be used in the preparation of the final lot.

Sterility (*2.6.1*). Carry out the test for sterility, using 10 mL for each medium.

FINAL LOT

The final bulk vaccine is distributed aseptically into sterile, tamper-proof glass ampoules and heat-sealed to prevent contamination.

Only a final lot that is satisfactory with respect to each of the requirements given below under Identification, Tests and Assay may be released for use. Provided the potency assay, the specific toxicity (oedema) test and the test for antimicrobial preservative have been carried out with satisfactory results on the purified harvest, they may be omitted on the final lot.

IDENTIFICATION

The presence of *B. anthracis* protective antigen is confirmed by a suitable immunochemical method (*2.7.1*).

TESTS

Abnormal toxicity. Inject intraperitoneally up to 4 human doses of vaccine into each of at least 10 healthy mice, each weighing 17-22 g. Observe the mice daily for 7 days. The vaccine complies with the test if none of the animals shows signs of ill health.

Specific toxicity (oedema) test. Use not fewer than 2 rabbits per test. Prepare serial two-fold dilutions of vaccine with normal saline, corresponding to 4, 2, 1, 0.5 and 0.25 human doses. Inject intradermally 0.1 mL of each dilution of the test and of the reference vaccine into the shaved flanks of 2 rabbits. Each rabbit receives the 10 previously prepared injections (5 dilutions of the test vaccine and 5 dilutions of the reference vaccine). In one of the rabbits, the lower concentrations are injected at the anterior end and the higher concentrations at the posterior end. The reverse is used for the 2nd rabbit. The rabbits are monitored for 24 h for signs of oedema at

Vaccines

the injection site. The vaccine complies with the test if the oedematous reaction is not greater than that observed with the reference vaccine.

Alternatively, specific *in vitro* assays for lethal factor and adenylate cyclase activity may be used, subject to validation.

Antimicrobial preservative. Determine the amount of antimicrobial preservative by a suitable chemical method. The content is not less than the minimum amount shown to be effective and is not greater than 115 per cent of the intended content.

Aluminium (*2.5.13*): maximum 1.25 mg per single human dose.

Sterility (*2.6.1*). It complies with the test for sterility.

ASSAY

The potency of the anthrax vaccine is determined by comparing the dose required to protect guinea-pigs against intradermal challenge by a virulent strain of *B. anthracis* with the dose of a suitable reference preparation that gives the same protection. Use 9 groups of not fewer than 16 female guinea-pigs, each weighing 250-350 g. Prepare 4 dilutions of the vaccine and of the reference preparation containing 1.5, 0.5, 0.17 and 0.05 human doses in 0.5 mL. Allocate each dilution to a separate group. The remaining group receives 0.5 mL of saline and is used to verify the challenge dose. Inject subcutaneously into each guinea-pig 0.5 mL of the dilution allocated to its group on each of 2 occasions, 1 week apart. 7 days after the 2nd injection, inject intradermally into each guinea-pig 2000 spores of a virulent strain of *B. anthracis* (Vollum) in 0.1 mL. Observe the animals for 10 days and record the number of deaths per group. The test is not valid unless all the control animals die within 5 days of challenge. Using the proportions of animals that survive in each of the vaccinated groups, calculate the potency of the vaccine relative to the reference preparation using the usual statistical methods (*5.3*). The vaccine complies with the test if:

- the relative potency estimate exceeds 1.0, or;
- the 95 per cent confidence interval for the relative potency includes 1.0, and the lower 95 per cent confidence limit is not less than 50 per cent of the relative potency estimate.

LABELLING

The label states that the vaccine is not to be frozen.

01/2009:1929

BCG FOR IMMUNOTHERAPY

BCG ad immunocurationem

DEFINITION

BCG for immunotherapy is a freeze-dried preparation of live bacteria derived from a culture of the bacillus of Calmette and Guérin (*Mycobacterium bovis* BCG) whose capacity for treatment has been established.

It complies with the monograph *Vaccines for human use (0153)*.

PRODUCTION

GENERAL PROVISIONS

BCG for immunotherapy shall be produced by a staff consisting of healthy persons who do not work with other infectious agents; in particular they shall not work with virulent strains of *Mycobacterium tuberculosis*, nor shall they be exposed to a known risk of tuberculosis infection. Staff are examined periodically for tuberculosis. BCG for immunotherapy is susceptible to sunlight: the procedures for production shall be so designed that all products are protected from direct sunlight and from ultraviolet light at all stages of manufacture, testing and storage.

Production is based on a seed-lot system. The production method shall have been shown to yield consistently BCG products that can be used for treatment of superficial bladder cancer and are safe. The product is prepared from cultures which are separated from the master seed lot by as few subcultures as possible and in any case not more than 8 subcultures. During the course of these subcultures the preparation is not freeze-dried more than once.

If a bioluminescence test or other biochemical method is used instead of viable count, the method is validated against the viable count for each stage of the process at which it is used.

SEED LOTS

The strain used to establish the master seed lot is chosen for and maintained to preserve its characteristics, its capacity to treat and prevent superficial bladder cancer, and its relative absence of pathogenicity for man and laboratory animals. The strain used shall be identified by historical records that include information on its origin and subsequent manipulation. Before establishment of a working seed lot a batch is prepared and reserved for use as the comparison product. When a new working seed lot is established, a suitable test for delayed hypersensitivity in guinea-pigs is carried out on a batch of product prepared from the new working seed lot; the product is shown to be not significantly different in activity from the comparison product. Antimicrobial agent sensitivity testing is also carried out.

Only a working seed lot that complies with the following requirements may be used for propagation.

Identification. The bacteria in the working seed lot are identified as *Mycobacterium bovis* BCG using microbiological techniques, which may be supplemented by molecular biology techniques (for example, nucleic acid amplification and restriction-fragment-length polymorphism).

Bacterial and fungal contamination. Carry out the test for sterility (*2.6.1*), using 10 mL for each medium. The working seed lot complies with the test for sterility, except for the presence of mycobacteria.

Virulent mycobacteria. Examine the working seed lot as prescribed under Tests, using 10 guinea-pigs.

PROPAGATION AND HARVEST

The bacteria are grown in a suitable medium for not more than 21 days by surface or submerged culture. The culture medium does not contain substances known to cause toxic or allergic reactions in human beings or to cause the bacteria to become virulent for guinea-pigs. The culture is harvested and suspended in a sterile liquid medium that protects the viability of the culture as determined by a suitable method of viable count.

FINAL BULK

The final bulk is prepared from a single harvest or by pooling a number of single harvests. A stabiliser may be added; if the stabiliser interferes with the determination of bacterial concentration on the final bulk, the determination is carried out before addition of the stabiliser.

Only final bulk that complies with the following requirements may be used in the preparation of the final lot.

Bacterial and fungal contamination. Carry out the test for sterility (*2.6.1*), using 10 mL of final bulk for each medium. The final bulk complies with the test for sterility, except for the presence of mycobacteria.

Count of viable units. Determine the number of viable units per millilitre by viable count on solid medium using a method suitable for the product to be examined or by a suitable biochemical method. Carry out the test in parallel on a reference preparation of the same strain.

Bacterial concentration. Determine the total bacterial concentration by a suitable method, either directly by determining the mass of the micro-organisms, or indirectly by an opacity method that has been calibrated in relation to the

mass of the micro-organisms; if the bacterial concentration is determined before addition of a stabiliser, the concentration in the final bulk is established by calculation. The total bacterial concentration is within the limits approved for the particular product.

The ratio of the count of viable units to the total bacterial concentration is not less than that approved for the particular product.

FINAL LOT

The final bulk is distributed into sterile containers and freeze-dried to a moisture content favourable to the stability of the product; the containers are closed either under vacuum or under an inert gas.

Except where the filled and closed containers are stored at a temperature of − 20 °C or lower, the expiry date is not later than 4 years from the date of harvest.

Only a final lot that complies with the following requirement for count of viable units and with each of the requirements given below under Identification, Tests and Assay may be released for use. Provided the test for virulent mycobacteria has been carried out with satisfactory results on the final bulk, it may be omitted on the final lot.

Count of viable units. Determine the number of viable units per millilitre of the reconstituted product by viable count on solid medium using a method suitable for the product to be examined, or by a suitable biochemical method. The ratio of the count of viable units after freeze-drying to that before is not less than that approved for the particular product.

IDENTIFICATION

BCG for immunotherapy is identified by microscopic examination of the bacilli in stained smears demonstrating their acid-fast property and by the characteristic appearance of colonies grown on solid medium. Alternatively, molecular biology techniques (for example, nucleic acid amplification) may be used.

TESTS

Virulent mycobacteria. Inject subcutaneously or intramuscularly into each of 6 guinea-pigs, each weighing 250-400 g and having received no treatment likely to interfere with the test, a quantity of the product to be examined equivalent to at least 1/25 of 1 human dose. Observe the animals for at least 42 days. At the end of this period, euthanise the guinea-pigs and examine by autopsy for signs of infection with tuberculosis, ignoring any minor reactions at the site of injection. Animals that die during the observation period are also examined for signs of tuberculosis. The product complies with the test if none of the guinea-pigs shows signs of tuberculosis and if not more than 1 animal dies during the observation period. If 2 animals die during this period and autopsy does not reveal signs of tuberculosis, repeat the test on 6 other guinea-pigs. The product complies with the test if not more than 1 animal dies during the 42 days following the injection and autopsy does not reveal any sign of tuberculosis.

Bacterial and fungal contamination. The reconstituted product complies with the test for sterility (*2.6.1*) except for the presence of mycobacteria.

Water. Not more than the limit approved for the particular product, determined by a suitable method.

ASSAY

Determine the number of viable units in the reconstituted product by viable count on solid medium using a method suitable for the product to be examined or by a suitable validated biochemical method. The number is within the range stated on the label. Determine the number of viable units in the comparison control in parallel.

LABELLING

The label states:

- the minimum and the maximum number of viable units per dose in the reconstituted product;
- that the product must be protected from direct sunlight.

01/2012:0163

BCG VACCINE, FREEZE-DRIED

Vaccinum tuberculosis (BCG) cryodesiccatum

DEFINITION

Freeze-dried BCG vaccine is a preparation of live bacteria derived from a culture of the bacillus of Calmette and Guérin (*Mycobacterium bovis* BCG) whose capacity to protect against tuberculosis has been established.

PRODUCTION

GENERAL PROVISIONS

BCG vaccine shall be produced by a staff consisting of healthy persons who do not work with other infectious agents; in particular they shall not work with virulent strains of *Mycobacterium tuberculosis*, nor shall they be exposed to a known risk of tuberculosis infection. Staff are examined periodically for tuberculosis. BCG vaccine is susceptible to sunlight: the procedures for the preparation of the vaccine shall be designed so that all cultures and vaccines are protected from direct sunlight and from ultraviolet light at all stages of manufacture, testing and storage.

Production of the vaccine is based on a seed-lot system. The production method shall have been shown to yield consistently BCG vaccines that induce adequate sensitivity to tuberculin in man, that have acceptable protective potency in animals and are safe. The vaccine is prepared from cultures which are derived from the master seed lot by as few subcultures as possible and in any case not more than 8 subcultures. During the course of these subcultures the preparation is not freeze-dried more than once.

If a bioluminescence test or other biochemical method is used instead of viable count, the method is validated against the viable count for each stage of the process at which it is used.

BACTERIAL SEED LOTS

The strain used to establish the master seed lot is chosen for and maintained to preserve its characteristics, its capacity to sensitise man to tuberculin and to protect animals against tuberculosis, and its relative absence of pathogenicity for man and laboratory animals. The strain used shall be identified by historical records that include information on its origin and subsequent manipulation.

A suitable batch of vaccine is prepared from the first working seed lot and is reserved for use as the comparison vaccine. When a new working seed lot is established, a suitable test for delayed hypersensitivity in guinea-pigs is carried out on a batch of vaccine prepared from the new working seed lot; the vaccine is shown to be not significantly different in activity from the comparison vaccine. Antimicrobial agent sensitivity testing is also carried out.

Only a working seed lot that complies with the following requirements may be used for propagation.

Identification. The bacteria in the working seed lot are identified as *Mycobacterium bovis* BCG using microbiological techniques, which may be supplemented by molecular biology techniques (for example, nucleic acid amplification and restriction-fragment-length polymorphism).

Bacterial and fungal contamination. Carry out the test for sterility (*2.6.1*), using 10 mL for each medium. The working seed lot complies with the test for sterility except for the presence of mycobacteria.

Virulent mycobacteria. Examine the working seed lot as prescribed under Tests, using 10 guinea-pigs.

PROPAGATION AND HARVEST

The bacteria are grown in a suitable medium for not more than 21 days by surface or submerged culture. The culture medium does not contain substances known to cause toxic or allergic reactions in humans or to cause the bacteria to become virulent for guinea-pigs. The culture is harvested and suspended in a sterile liquid medium that protects the viability of the vaccine as determined by a suitable method of viable count.

FINAL BULK VACCINE

The final bulk vaccine is prepared from a single harvest or by pooling a number of single harvests. A stabiliser may be added; if the stabiliser interferes with the determination of bacterial concentration in the final bulk vaccine, the determination is carried out before addition of the stabiliser.

Only final bulk vaccine that complies with the following requirements may be used in the preparation of the final lot.

Bacterial and fungal contamination. Carry out the test for sterility (*2.6.1*), using 10 mL for each medium. The final bulk vaccine complies with the test for sterility except for the presence of mycobacteria.

Count of viable units. Determine the number of viable units per millilitre by viable count on solid medium using a method suitable for the vaccine to be examined or by a suitable biochemical method. Carry out the test in parallel on a reference preparation of the same strain.

Bacterial concentration. Determine the total bacterial concentration by a suitable method, either directly by determining the mass of the micro-organisms, or indirectly by an opacity method that has been calibrated in relation to the mass of the organisms; if the bacterial concentration is determined before addition of a stabiliser, the concentration in the final bulk vaccine is established by calculation. The total bacterial concentration is within the limits approved for the particular product.

The ratio of the count of viable units to the total bacterial concentration is not less than that approved for the particular product.

FINAL LOT

The final bulk vaccine is distributed into sterile containers and freeze-dried to a moisture content favourable to the stability of the vaccine; the containers are closed either under vacuum or under an inert gas.

Except where the filled and closed containers are stored at a temperature of – 20 °C or lower, the expiry date is not later than 4 years from the date of harvest.

Only a final lot that complies with the following requirement for count of viable units and with each of the requirements given below under Identification, Tests and Assay may be released for use. Provided the test for virulent mycobacteria has been carried out with satisfactory results on the final bulk vaccine, it may be omitted on the final lot. Provided the test for excessive dermal reactivity has been carried out with satisfactory results on the working seed lot and on 5 consecutive final lots produced from it, the test may be omitted on the final lot.

Count of viable units. Determine the number of viable units per millilitre of the reconstituted vaccine by viable count on solid medium using a method suitable for the vaccine to be examined or by a suitable biochemical method. The ratio of the count of viable units after freeze-drying to that before is not less than that approved for the particular product.

Thermal stability. Maintain containers of the final lot of freeze-dried vaccine in the dry state at 37 ± 1 °C for 4 weeks. Determine the number of viable units as described under Assay in parallel for the heated vaccine and for vaccine stored at the temperature recommended for storage. The number of viable units in the heated vaccine is not less than 20 per cent of that in the unheated vaccine.

IDENTIFICATION

BCG vaccine is identified by microscopic examination of the bacilli in stained smears demonstrating their acid-fast property and by the characteristic appearance of colonies grown on solid medium. Alternatively, molecular biology techniques (for example nucleic acid amplification) may be used.

TESTS

Virulent mycobacteria. Inject subcutaneously or intramuscularly into each of 6 guinea-pigs, each weighing 250-400 g and having received no treatment likely to interfere with the test, a quantity of vaccine equivalent to at least 50 human doses. Observe the animals for at least 42 days. At the end of this period, euthanise the guinea-pigs and examine by autopsy for signs of infection with tuberculosis, ignoring any minor reactions at the site of injection. Animals that die during the observation period are also examined for signs of tuberculosis. The vaccine complies with the test if none of the guinea-pigs shows signs of tuberculosis and if not more than 1 animal dies during the observation period. If 2 animals die during this period and autopsy does not reveal signs of tuberculosis repeat the test on 6 other guinea-pigs. The vaccine complies with the test if not more than 1 animal dies during the 42 days following the injection and autopsy does not reveal any sign of tuberculosis.

Bacterial and fungal contamination. The reconstituted vaccine complies with the test for sterility (*2.6.1*) except for the presence of mycobacteria.

Excessive dermal reactivity. Use 6 healthy, white or pale-coloured guinea-pigs, each weighing not less than 250 g and having received no treatment likely to interfere with the test. Inject intradermally into each guinea-pig, according to a randomised plan, 0.1 mL of the reconstituted vaccine and of 2 tenfold serial dilutions of the vaccine and identical doses of the comparison vaccine. Observe the lesions formed at the site of the injection for 4 weeks. The vaccine complies with the test if the reaction it produces is not markedly different from that produced by the comparison vaccine.

Water. Not more than the limit approved for the particular product, determined by a suitable method.

ASSAY

Determine the number of viable units in the reconstituted vaccine by viable count on solid medium using a method suitable for the vaccine to be examined or by a suitable validated biochemical method. The number is within the range stated on the label. Determine the number of viable units in the comparison vaccine in parallel.

LABELLING

The label states:

- the minimum and maximum number of viable units per millilitre in the reconstituted vaccine,
- that the vaccine must be protected from direct sunlight.

01/2008:0154

CHOLERA VACCINE

Vaccinum cholerae

DEFINITION

Cholera vaccine is a homogeneous suspension of a suitable strain or strains of *Vibrio cholerae* containing not less than 8×10^9 bacteria in each human dose. The human dose does not exceed 1.0 mL.

PRODUCTION

The vaccine is prepared using a seed-lot system. The vaccine consists of a mixture of equal parts of vaccines prepared from smooth strains of the 2 main serological types, Inaba and Ogawa. These may be of the classical biotype with or without the El-Tor biotype. A single strain or several strains of each type may be included. All strains must contain, in addition to their type O antigens, the heat-stable O antigen common to Inaba and Ogawa. If more than one strain each of Inaba and Ogawa are used, these may be selected so as to contain other O antigens in addition. The World Health Organization recommends new strains which may be used if necessary, in accordance with the regulations in force in the signatory States of the Convention on the Elaboration of a European Pharmacopoeia. In order to comply with the requirements for vaccination certificates required for international travel, the vaccine must contain not less than 8×10^9 organisms of the classical biotype. Each strain is grown separately. The bacteria are inactivated either by heating the suspensions (for example, at 56 °C for 1 h) or by treatment with formaldehyde or phenol or by a combination of the physical and chemical methods.

The production method is validated to demonstrate that the product, if tested, would comply with the test for abnormal toxicity for immunosera and vaccines for human use (*2.6.9*) modified as follows: inject 0.5 mL of the vaccine into each mouse and 1.0 mL into each guinea pig.

IDENTIFICATION

It is identified by specific agglutination tests.

TESTS

Phenol (*2.5.15*). If phenol has been used in the preparation, the concentration is not more than 5 g/L.

Antibody production. Test the ability of the vaccine to induce antibodies (such as agglutinating, vibriocidal or haemagglutinating antibodies) in the guinea-pig, the rabbit or the mouse. Administer the vaccine to a group of at least 6 animals. At the end of the interval of time necessary for maximum antibody formation, determined in preliminary tests, collect sera from the animals and titrate them individually for the appropriate antibody using a suitable method. The vaccine to be examined passes the test if each serotype has elicited a significant antibody response.

Sterility (*2.6.1*). It complies with the test for sterility.

LABELLING

The label states:

- the method used to inactivate the bacteria,
- the number of bacteria in each human dose.

01/2008:0155

CHOLERA VACCINE, FREEZE-DRIED

Vaccinum cholerae cryodesiccatum

DEFINITION

Freeze-dried cholera vaccine is a preparation of a suitable strain or strains of *Vibrio cholerae*. The vaccine is reconstituted as stated on the label to give a uniform suspension containing not less than 8×10^9 bacteria in each human dose. The human dose does not exceed 1.0 mL of the reconstituted vaccine.

PRODUCTION

The vaccine is prepared using a seed-lot system. The vaccine consists of a mixture of equal parts of vaccines prepared from smooth strains of the 2 main serological types, Inaba and Ogawa. These may be of the classical biotype with or without the El-Tor biotype. A single strain or several strains of each type may be included. All strains must contain, in addition to their type O antigens, the heat-stable O antigen common to Inaba and Ogawa. If more than one strain each of Inaba and Ogawa are used, these may be selected so as to contain other O antigens in addition. The World Health Organization recommends new strains which may be used if necessary in accordance with the regulations in force in the signatory States of the Convention on the Elaboration of a European Pharmacopoeia. In order to comply with the requirements for vaccination certificates required for international travel, the vaccine must contain not less than 8×10^9 organisms of the classical biotype. Each strain is grown separately. The bacteria are inactivated either by heating the suspensions (for example, at 56 °C for 1 h) or by treatment with formaldehyde or by a combination of the physical and chemical methods. Phenol is not used in the preparation. The vaccine is distributed into sterile containers and freeze-dried to a moisture content favourable to the stability of the vaccine. The containers are then closed so as to exclude contamination.

The production method is validated to demonstrate that the product, if tested, would comply with the test for abnormal toxicity for immunosera and vaccines for human use (*2.6.9*) modified as follows: inject 0.5 mL of the vaccine into each mouse and 1.0 mL into each guinea pig.

IDENTIFICATION

The vaccine reconstituted as stated on the label is identified by specific agglutination tests.

TESTS

Phenol (*2.5.15*). If phenol has been used in the preparation, the concentration is not more than 5 g/L.

Antibody production. Test the ability of the vaccine to induce antibodies (such as agglutinating, vibriocidal or haemagglutinating antibodies) in the guinea-pig, the rabbit or the mouse. Administer the reconstituted vaccine to a group of at least 6 animals. At the end of the interval of time necessary for maximum antibody formation, determined in preliminary tests, collect sera from the animals and titrate them individually for the appropriate antibody using a suitable method. The vaccine to be examined passes the test if each serotype has elicited a significant antibody response.

Sterility (*2.6.1*). The reconstituted vaccine complies with the test for sterility.

LABELLING

The label states:

- the method used to inactivate the bacteria,
- the number of bacteria in each human dose.

01/2008:2327

CHOLERA VACCINE (INACTIVATED, ORAL)

Vaccinum cholerae perorale inactivatum

DEFINITION

Cholera vaccine (inactivated, oral) is a homogeneous suspension of inactivated suitable strains of *Vibrio cholerae* serogroup O1, representing serotypes and biotypes of epidemic strains. The vaccine may contain the B subunit of cholera toxin (CTB). Just prior to ingestion, one dose of vaccine suspension is mixed with a suitable buffer as stated on the label.

PRODUCTION

GENERAL PROVISIONS

The production method must be validated to yield consistently vaccines comparable with the vaccine of proven clinical efficacy and safety in man.

The production process must be validated to show that no clinically significant quantities of active toxin are present in the product.

CHOICE OF VACCINE STRAIN

The vaccine consists of a mixture of epidemic *V. cholerae* strains inactivated by a suitable method such as heat or formalin inactivation. All strains express smooth lipopolysaccharide (LPS). The CTB is produced by recombinant DNA technology in a strain that lacks the gene for cholera toxin subunit A (*ctxA*$^-$). Selected *V. cholerae* strains are low cholera-toxin producers.

The World Health Organization (WHO) can recommend new vaccine strains or antigens that may be used if necessary, in accordance with the regulations in force in the signatory states of the Convention on the Elaboration of a European Pharmacopoeia.

SEED LOTS

The strains of *V. cholerae* used shall be identified by historical records that include information on the origin of the strains and their subsequent manipulation. Characterisation and maintenance of the recombinant strains and plasmids used for production of the recombinant B subunit of cholera toxin (rCTB) and the origin of the gene for cholera toxin subunit B (*ctxB*) are documented. The stability of the rCTB plasmid in the recombinant strain during storage and beyond the passage level used in production is confirmed.

Characterisation of the rCTB is undertaken using a variety of analytical techniques including determination of molecular size, charge and amino acid composition. Techniques suitable for such purposes include sodium dodecyl sulfate polyacrylamide gel electrophoresis (SDS-PAGE) and different liquid chromatographies. The identity of the product is confirmed by at least partial *N*-terminal and *C*-terminal amino acid sequencing.

Master seed lots are grown on agar plates, which may contain appropriate antibiotics. Colonies are used to produce working seed lots in liquid media that are free from antibiotics. Cultures derived from the working seed lot must have the same characteristics as the cultures of the strain from which the master seed lot was derived.

Only a seed lot that complies with the following requirements may be used in the preparation of the monovalent cell harvest.

Identification. Master seed lots are identified by colony morphology, and by biochemical characterisation, using suitable molecular assays or immunoassays. Working seed lots are identified by colony morphology and by molecular assays or immunoassays.

Purity. Purity of master seed lots and working seed lots is verified by methods of suitable sensitivity.

PROPAGATION AND HARVEST

Each strain is grown separately from the working seed lot.

Cultures are checked at different stages of fermentation (subcultures and main culture) for purity, identity, cell opacity, pH and biochemical characteristics. Unsatisfactory cultures must be discarded.

Production cultures are shown to be consistent in respect of growth rate, pH and yield of cells or cell products.

MONOVALENT CELL HARVEST

Only a monovalent harvest that complies with established specifications for the following tests may be used.

pH (*2.2.3*): within the range approved for the particular product.

Identification. Relevant antigenic characteristics are verified by suitable immunological or biochemical assays.

Purity. Samples of culture are examined by microscopy of Gram-stained smears, by inoculation of appropriate culture media or by another suitable procedure.

Opacity. The absorbance at 600 nm (*2.2.25*) is within the range approved for the particular product.

INACTIVATED MONOVALENT CELL BULK

To limit the possibility of contamination, inactivation is initiated as soon as possible after preparation. Bacteria are inactivated after washing, either by treatment with formaldehyde or by heating under conditions that ensure inactivation.

Only an inactivated monovalent cell bulk that complies with established specifications for the following tests may be used in the preparation of the final bulk.

pH (*2.2.3*): within the range approved for the particular product.

Identification: verified by slide agglutination.

Inactivation. Complete inactivation is verified by a suitable culture method.

Sterility (*2.6.1*). It complies with the test for sterility, carried out using 10 mL for each medium.

Opacity. The inactivation process may affect the accuracy of opacity measurements.

Purity. Samples of culture are examined by microscopy of Gram-stained smears, by inoculation of appropriate culture media or by another suitable procedure.

Smooth LPS content: verified by a suitable immunoassay (*2.7.1*).

Residual cholera toxin. The absence of residual cholera toxin is verified by a suitable immunoassay (*2.7.1*) or biochemical assay.

Free formaldehyde (*2.4.18*): content to be determined where formaldehyde is used for inactivation.

PURIFIED rCTB

Production of the rCTB follows the guidelines for assuring the quality of pharmaceutical and biological products prepared by recombinant technology and is covered by the monograph *Products of recombinant DNA technology (0784)*. Prior to harvest, the cell culture is checked for purity and opacity. rCTB is harvested by suitable filtration, concentrated by diafiltration, purified by chromatography, filter-sterilised and stored under suitable conditions. The pH of the pooled eluate is adjusted prior to buffer exchange.

Only purified rCTB that complies with established specifications for the following tests may be used in the preparation of the final bulk.

pH (*2.2.3*): within the range approved for the particular product.

Purity: verified by SDS-PAGE (*2.2.31*) and an appropriate liquid chromatography method (*2.2.29*).

Sterility (*2.6.1*). It complies with the test for sterility, carried out using 10 mL for each medium.

rCTB. The amount of rCTB is determined by a suitable immunoassay (*2.7.1*).

FINAL BULK

The final bulk vaccine is prepared by aseptically mixing a suitable buffer with monovalent cell bulks. Where used, the rCTB bulk is added in appropriate amounts. Preservatives, if used, may be added at this stage.

Only a final bulk that complies with the following requirements may be used in the preparation of the final lot.

Sterility (*2.6.1*). It complies with the test for sterility, carried out using 10 mL for each medium.

Antimicrobial preservative. Where applicable, determine the amount of antimicrobial preservative by a suitable chemical or physico-chemical method. The amount is not less than 85 per cent and not greater than 115 per cent of the intended amount.

FINAL LOT

The final bulk is mixed to homogeneity and filled aseptically into suitable containers.

Only a final lot that is within the limits approved for the particular product and is satisfactory with respect to each of the requirements given below under Identification, Tests and Assay may be released for use.

IDENTIFICATION

Serotypes are detected by a suitable immunoassay (*2.7.1*) or molecular assay. rCTB is detected by a suitable immunoassay (*2.7.1*). The antigen-content assays may also serve as an identity test.

TESTS

pH (*2.2.3*): within the range approved for the particular product.

Sterility (*2.6.1*). It complies with the test for sterility.

Free formaldehyde (*2.4.18*): maximum 0.2 g/L, where applicable.

Antimicrobial preservative. Where applicable, determine the amount of antimicrobial preservative by a suitable chemical or physico-chemical method. The amount is not less than 85 per cent and not greater than 115 per cent of the intended amount.

ASSAY

Antigen content. The amount of smooth LPS, and where applicable, the amount of rCTB, are within the limits approved for the particular product, determined by a suitable immunoassay (*2.7.1*).

LABELLING

The label states:

- the method of inactivation;
- the serogroup, serotypes and biotypes of vaccine strains;
- the number of bacteria per human dose;
- the amount of rCTB.

01/2008:0444

DIPHTHERIA AND TETANUS VACCINE (ADSORBED)

Vaccinum diphtheriae et tetani adsorbatum

DEFINITION

Diphtheria and tetanus vaccine (adsorbed) is a preparation of diphtheria formol toxoid and tetanus formol toxoid with a mineral adsorbent. The formol toxoids are prepared from the toxins produced by the growth of *Corynebacterium diphtheriae* and *Clostridium tetani*, respectively.

PRODUCTION

GENERAL PROVISIONS

Specific toxicity of the diphtheria and tetanus components. The production method is validated to demonstrate that the product, if tested, would comply with the following test: inject subcutaneously 5 times the single human dose stated on the label into each of 5 healthy guinea-pigs, each weighing 250-350 g, that have not previously been treated with any material that will interfere with the test. If within 42 days of the injection any of the animals shows signs of or dies from diphtheria toxaemia or tetanus, the vaccine does not comply with the test. If more than 1 animal dies from non-specific causes, repeat the test once; if more than 1 animal dies in the second test, the vaccine does not comply with the test.

BULK PURIFIED DIPHTHERIA AND TETANUS TOXOIDS

The bulk purified diphtheria and tetanus toxoids are prepared as described in the monographs on *Diphtheria vaccine (adsorbed) (0443)* and *Tetanus vaccine (adsorbed) (0452)* and comply with the requirements prescribed therein.

FINAL BULK VACCINE

The final bulk vaccine is prepared by adsorption of suitable quantities of bulk purified diphtheria toxoid and tetanus toxoid onto a mineral carrier such as hydrated aluminium phosphate or aluminium hydroxide; the resulting mixture is approximately isotonic with blood. Suitable antimicrobial preservatives may be added. Certain antimicrobial preservatives, particularly those of the phenolic type, adversely affect the antigenic activity and must not be used.

Only a final bulk vaccine that complies with the following requirements may be used in the preparation of the final lot.

Antimicrobial preservative. Where applicable, determine the amount of antimicrobial preservative by a suitable chemical method. The amount is not less than 85 per cent and not greater than 115 per cent of the intended amount.

Sterility (*2.6.1*). Carry out the test for sterility using 10 mL for each medium.

FINAL LOT

The final bulk vaccine is distributed aseptically into sterile, tamper-proof containers. The containers are closed so as to prevent contamination.

Only a final lot that is satisfactory with respect to each of the requirements given below under Identification, Tests and Assay may be released for use. Provided the test for antimicrobial preservative and the assay have been carried out with satisfactory results on the final bulk vaccine, they may be omitted on the final lot.

Provided the free formaldehyde content has been determined on the bulk purified antigens or on the final bulk and it has been shown that the content in the final lot will not exceed 0.2 g/L, the test for free formaldehyde may be omitted on the final lot.

Vaccines

IDENTIFICATION

A. Diphtheria toxoid is identified by a suitable immunochemical method (*2.7.1*). The following method, applicable to certain vaccines, is given as an example. Dissolve in the vaccine to be examined sufficient *sodium citrate R* to give a 100 g/L solution. Maintain at 37 °C for about 16 h and centrifuge until a clear supernatant is obtained. The clear supernatant reacts with a suitable diphtheria antitoxin, giving a precipitate.

B. Tetanus toxoid is identified by a suitable immunochemical method (*2.7.1*). The following method, applicable to certain vaccines, is given as an example. The clear supernatant obtained as described in identification test A reacts with a suitable tetanus antitoxin, giving a precipitate.

TESTS

Aluminium (*2.5.13*): maximum 1.25 mg per single human dose, if aluminium hydroxide or hydrated aluminium phosphate is used as the adsorbent.

Free formaldehyde (*2.4.18*): maximum 0.2 g/L.

Antimicrobial preservative. Where applicable, determine the amount of antimicrobial preservative by a suitable chemical method. The content is not less than the minimum amount shown to be effective and is not greater than 115 per cent of the quantity stated on the label.

Sterility (*2.6.1*). The vaccine complies with the test for sterility.

ASSAY

Diphtheria component. Carry out one of the prescribed methods for the assay of diphtheria vaccine (adsorbed) (*2.7.6*).

The lower confidence limit ($P = 0.95$) of the estimated potency is not less than 30 IU per single human dose.

Tetanus component. Carry out one of the prescribed methods for the assay of tetanus vaccine (adsorbed) (*2.7.8*).

The lower confidence limit ($P = 0.95$) of the estimated potency is not less than 40 IU per single human dose.

LABELLING

The label states:

- the minimum number of International Units of each component per single human dose,
- where applicable, that the vaccine is intended for primary vaccination of children and is not necessarily suitable for reinforcing doses or for administration to adults,
- the name and the amount of the adsorbent,
- that the vaccine must be shaken before use,
- that the vaccine is not to be frozen.

01/2008:0647

DIPHTHERIA AND TETANUS VACCINE (ADSORBED, REDUCED ANTIGEN(S) CONTENT)

Vaccinum diphtheriae et tetani, antigeni-o(-is) minutum, adsorbatum

DEFINITION

Diphtheria and tetanus vaccine (adsorbed, reduced antigen(s) content) is a preparation of diphtheria formol toxoid and tetanus formol toxoid with a mineral adsorbent. The formol toxoids are prepared from the toxins produced by the growth of *Corynebacterium diphtheriae* and *Clostridium tetani*, respectively. It shall have been demonstrated to the competent authority that the quantity of diphtheria toxoid used does not produce adverse reactions in subjects from the age groups for which the vaccine is intended.

PRODUCTION

GENERAL PROVISIONS

Specific toxicity of the diphtheria and tetanus components. The production method is validated to demonstrate that the product, if tested, would comply with the following test: inject subcutaneously 5 times the single human dose stated on the label into each of 5 healthy guinea-pigs, each weighing 250-350 g, that have not previously been treated with any material that will interfere with the test. If within 42 days of the injection any of the animals shows signs of or dies from diphtheria toxaemia or tetanus, the vaccine does not comply with the test. If more than one animal dies from non-specific causes, repeat the test once; if more than one animal dies in the second test, the vaccine does not comply with the test.

BULK PURIFIED DIPHTHERIA TOXOID AND TETANUS TOXOIDS

The bulk purified diphtheria and tetanus toxoids are prepared as described in the monographs on *Diphtheria vaccine (adsorbed) (0443)* and *Tetanus vaccine (adsorbed) (0452)* and comply with the requirements prescribed therein.

FINAL BULK VACCINE

The vaccine is prepared by adsorption of suitable quantities of bulk purified diphtheria toxoid and tetanus toxoid onto a mineral carrier such as hydrated aluminium phosphate or aluminium hydroxide; the resulting mixture is approximately isotonic with blood. Suitable antimicrobial preservatives may be added. Certain antimicrobial preservatives, particularly those of the phenolic type, adversely affect the antigenic activity and must not be used.

Only a final bulk vaccine that complies with the following requirements may be used in the preparation of the final lot.

Antimicrobial preservative. Where applicable, determine the amount of antimicrobial preservative by a suitable chemical method. The amount is not less than 85 per cent and not greater than 115 per cent of the intended amount.

Sterility (*2.6.1*). Carry out the test for sterility using 10 mL for each medium.

FINAL LOT

The final bulk vaccine is distributed aseptically into sterile, tamper-proof containers. The containers are closed so as to prevent contamination.

Only a final lot that is satisfactory with respect to each of the requirements given below under Identification, Tests and Assay may be released for use. Provided the test for antimicrobial preservative and the assay have been carried out with satisfactory results on the final bulk vaccine, they may be omitted on the final lot.

Provided the free formaldehyde content has been determined on the bulk purified toxoids or on the final bulk and it has been shown that the content in the final lot will not exceed 0.2 g/L, the test for free formaldehyde may be omitted on the final lot.

IDENTIFICATION

A. Diphtheria toxoid is identified by a suitable immunochemical method (*2.7.1*). The following method, applicable to certain vaccines, is given as an example. Dissolve in the vaccine to be examined sufficient *sodium citrate R* to give a 100 g/L solution. Maintain at 37 °C for about 16 h and centrifuge until a clear supernatant is obtained. The clear supernatant reacts with a suitable diphtheria antitoxin, giving a precipitate. If a satisfactory result is not obtained with a vaccine adsorbed on aluminium hydroxide, carry out the test as follows. Centrifuge 15 mL of the vaccine to be examined and suspend the residue in 5 mL of a freshly prepared mixture of 1 volume of a 56 g/L solution of *sodium edetate R* and 49 volumes of a 90 g/L solution of *disodium hydrogen phosphate R*. Maintain at 37 °C for not less than 6 h and centrifuge. The clear supernatant reacts with a suitable diphtheria antitoxin, giving a precipitate.

B. Tetanus toxoid is identified by a suitable immunochemical method (*2.7.1*). The following method, applicable to certain vaccines, is given as an example. The clear supernatant obtained during identification test A reacts with a suitable tetanus antitoxin, giving a precipitate.

TESTS

Aluminium (*2.5.13*): maximum 1.25 mg per single human dose, if aluminium hydroxide or hydrated aluminium phosphate is used as the adsorbent.

Free formaldehyde (*2.4.18*): maximum 0.2 g/L.

Antimicrobial preservative. Where applicable, determine the amount of antimicrobial preservative by a suitable chemical method. The content is not less than the minimum amount shown to be effective and is not greater than 115 per cent of the quantity stated on the label.

Sterility (*2.6.1*). The vaccine complies with the test for sterility.

ASSAY

Diphtheria component. Carry out one of the prescribed methods for the assay of diphtheria vaccine (adsorbed) (*2.7.6*).

The lower confidence limit ($P = 0.95$) of the estimated potency is not less than 2 IU per single human dose.

Tetanus component. Carry out one of the prescribed methods for the assay of tetanus vaccine (adsorbed) (*2.7.8*).

The lower confidence limit ($P = 0.95$) of the estimated potency is not less than 20 IU per single human dose.

LABELLING

The label states:

- the minimum number of International Units of each component per single human dose;
- the name and the amount of the adsorbent;
- that the vaccine must be shaken before use;
- that the vaccine is not to be frozen.

01/2008:2062

DIPHTHERIA, TETANUS AND HEPATITIS B (rDNA) VACCINE (ADSORBED)

Vaccinum diphtheriae, tetani et hepatitidis B (ADNr) adsorbatum

DEFINITION

Diphtheria, tetanus and hepatitis B (rDNA) vaccine (adsorbed) is a combined vaccine composed of: diphtheria formol toxoid; tetanus formol toxoid; hepatitis B surface antigen (HBsAg); a mineral adsorbent such as aluminium hydroxide or hydrated aluminium phosphate.

The formol toxoids are prepared from the toxins produced by the growth of *Corynebacterium diphtheriae* and *Clostridium tetani*, respectively.

HBsAg is a component protein of hepatitis B virus; the antigen is obtained by recombinant DNA technology.

PRODUCTION

GENERAL PROVISIONS

The production method shall have been shown to yield consistently vaccines comparable with the vaccine of proven clinical efficacy and safety in man.

The content of bacterial endotoxins (*2.6.14*) in the bulk purified diphtheria toxoid and tetanus toxoid is determined to monitor the purification procedure and to limit the amount in the final vaccine. For each component, the content of bacterial endotoxins is less than the limit approved for the particular vaccine and in any case the contents are such that the final vaccine contains less than 100 IU per single human dose.

Reference vaccine(s). Provided valid assays can be performed, monocomponent reference vaccines may be used for the assays on the combined vaccine. If this is not possible because of interaction between the components of the combined vaccine or because of the difference in composition between monocomponent reference vaccine and the test vaccine, a batch of combined vaccine shown to be effective in clinical trials or a batch representative thereof is used as a reference vaccine. For the preparation of a representative batch, strict adherence to the production process used for the batch tested in clinical trials is necessary. The reference vaccine may be stabilised by a method that has been shown to have no effect on the assay procedure.

Specific toxicity of the diphtheria and tetanus components. The production method is validated to demonstrate that the product, if tested, would comply with the following test: inject subcutaneously 5 times the single human dose stated on the label into each of 5 healthy guinea-pigs, each weighing 250-350 g, that have not previously been treated with any material that will interfere with the test. If within 42 days of the injection any of the animals shows signs of or dies from diphtheria toxaemia or tetanus, the vaccine does not comply with the test. If more than 1 animal dies from non-specific causes, repeat the test once; if more than 1 animal dies in the second test, the vaccine does not comply with the test.

PRODUCTION OF THE COMPONENTS

The production of the components complies with the requirements of the monographs on *Diphtheria vaccine (adsorbed) (0443)*, *Tetanus vaccine (adsorbed) (0452)* and *Hepatitis B vaccine (rDNA) (1056)*.

FINAL BULK VACCINE

The final bulk vaccine is prepared by adsorption, separately or together, of suitable quantities of bulk purified diphtheria toxoid, tetanus toxoid and HBsAg onto a mineral carrier such as aluminium hydroxide or hydrated aluminium phosphate. Suitable antimicrobial preservatives may be added.

Only a final bulk vaccine that complies with the following requirements may be used in the preparation of the final lot.

Antimicrobial preservative. Where applicable, determine the amount of antimicrobial preservative by a suitable chemical method. The amount is not less than 85 per cent and not greater than 115 per cent of the intended content.

Sterility (*2.6.1*). Carry out the test for sterility using 10 mL for each medium.

FINAL LOT

Only a final lot that is satisfactory with respect to the test for osmolality and with respect to each of the requirements given below under Identification, Tests and Assay may be released for use.

Provided the test for antimicrobial preservative and the assays for the diphtheria and tetanus components have been carried out with satisfactory results on the final bulk vaccine, they may be omitted on the final lot.

Provided the content of free formaldehyde has been determined on the bulk purified antigens or on the final bulk and it has been shown that the content in the final lot will not exceed 0.2 g/L, the test for free formaldehyde may be omitted on the final lot.

If an *in vivo* assay is used for the hepatitis B component, provided it has been carried out with satisfactory results on the final bulk vaccine, it may be omitted on the final lot.

Osmolality (*2.2.35*). The osmolality of the vaccine is within the limits approved for the particular preparation.

IDENTIFICATION

A. Diphtheria toxoid is identified by a suitable immunochemical method (*2.7.1*). The following method, applicable to certain vaccines, is given as an example. Dissolve in the vaccine to be examined sufficient *sodium citrate R* to give a 100 g/L solution. Maintain at 37 °C for about 16 h and centrifuge until a clear supernatant is obtained. The clear supernatant reacts with a suitable diphtheria antitoxin, giving a precipitate.

B. Tetanus toxoid is identified by a suitable immunochemical method (*2.7.1*). The following method, applicable to certain vaccines, is given as an example. The clear supernatant obtained during identification test A reacts with a suitable tetanus antitoxin, giving a precipitate.

C. The assay or, where applicable, the electrophoretic profile, serves also to identify the hepatitis B component of the vaccine.

TESTS

Aluminium (*2.5.13*): maximum 1.25 mg per single human dose, if aluminium hydroxide or hydrated aluminium phosphate is used as the adsorbent.

Free formaldehyde (*2.4.18*): maximum 0.2 g/L.

Antimicrobial preservative. Where applicable, determine the amount of antimicrobial preservative by a suitable chemical method. The content is not less than the minimum amount shown to be effective and is not greater than 115 per cent of the quantity stated on the label.

Sterility (*2.6.1*). It complies with the test for sterility.

Pyrogens (*2.6.8*). It complies with the test for pyrogens. Inject the equivalent of 1 human dose into each rabbit.

ASSAY

Diphtheria component. Carry out one of the prescribed methods for the assay of diphtheria vaccine (adsorbed) (*2.7.6*).

The lower confidence limit ($P = 0.95$) of the estimated potency is not less than 30 IU per single human dose.

Tetanus component. Carry out one of the prescribed methods for the assay of tetanus vaccine (adsorbed) (*2.7.8*).

The lower confidence limit ($P = 0.95$) of the estimated potency is not less than 40 IU per single human dose.

Hepatitis B component. It complies with the assay of hepatitis B vaccine (*2.7.15*).

LABELLING

The label states:

- the minimum number of International Units of diphtheria and tetanus toxoid per single human dose,
- the amount of HBsAg per single human dose,
- the type of cells used for production of the HBsAg component,
- where applicable, that the vaccine is intended for primary vaccination of children and is not necessarily suitable for reinforcing doses or for administration to adults,
- the name and the amount of the adsorbent,
- that the vaccine must be shaken before use,
- that the vaccine is not to be frozen.

Vaccines

07/2013:1931

DIPHTHERIA, TETANUS AND PERTUSSIS (ACELLULAR, COMPONENT) VACCINE (ADSORBED)

Vaccinum diphtheriae, tetani et pertussis sine cellulis ex elementis praeparatum adsorbatum

DEFINITION

Diphtheria, tetanus and pertussis (acellular, component) vaccine (adsorbed) is a combined vaccine composed of: diphtheria formol toxoid; tetanus formol toxoid; individually purified antigenic components of *Bordetella pertussis*; a mineral adsorbent such as aluminium hydroxide or hydrated aluminium phosphate.

The formol toxoids are prepared from the toxins produced by the growth of *Corynebacterium diphtheriae* and *Clostridium tetani*, respectively.

The vaccine contains either pertussis toxoid or a pertussis-toxin-like protein free from toxic properties, produced by expression of a genetically modified form of the corresponding gene. Pertussis toxoid is prepared from pertussis toxin by a method that renders the latter harmless while maintaining adequate immunogenic properties and avoiding reversion to toxin. The vaccine may also contain filamentous haemagglutinin, pertactin (a 69 kDa outer-membrane protein) and other defined components of *B. pertussis* such as fimbrial-2 and fimbrial-3 antigens. The latter 2 antigens may be co-purified. The antigenic composition and characteristics are based on evidence of protection and freedom from unexpected reactions in the target group for which the vaccine is intended.

PRODUCTION

GENERAL PROVISIONS

The production method shall have been shown to yield consistently vaccines comparable with the vaccine of proven clinical efficacy and safety in man.

Specific toxicity of the diphtheria and tetanus components. The production method is validated to demonstrate that the product, if tested, would comply with the following test: inject subcutaneously 5 times the single human dose stated on the label into each of 5 healthy guinea-pigs, each weighing 250-350 g, that have not previously been treated with any material that will interfere with the test. If within 42 days of the injection any of the animals shows signs of or dies from diphtheria toxaemia or tetanus, the vaccine does not comply with the test. If more than 1 animal dies from non-specific causes, repeat the test once; if more than 1 animal dies in the second test, the vaccine does not comply with the test.

The content of bacterial endotoxins (*2.6.14*) in the bulk purified diphtheria toxoid, tetanus toxoid and pertussis components is determined to monitor the purification procedure and to limit the amount in the final vaccine. For each component, the content of bacterial endotoxins is less than the limit approved for the particular vaccine and, in any case, the contents are such that the final vaccine contains less than 100 IU per single human dose.

Reference vaccine(s). Provided valid assays can be performed, monocomponent reference vaccines may be used for the assays on the combined vaccine. If this is not possible because of interaction between the components of the combined vaccine or because of differences in composition between the monocomponent reference vaccine and the test vaccine, a batch of combined vaccine shown to be effective in clinical trials or a batch representative thereof is used as a reference vaccine. For the preparation of a representative batch, strict adherence to the production process used for the batch tested

in clinical trials is necessary. The reference vaccine may be stabilised by a method that has been shown to have no effect on the assay procedure.

PRODUCTION OF THE COMPONENTS

The production of the components complies with the requirements of the monographs *Diphtheria vaccine (adsorbed) (0443)*, *Tetanus vaccine (adsorbed) (0452)* and *Pertussis vaccine (acellular, component, adsorbed) (1356)*.

FINAL BULK VACCINE

The final bulk vaccine is prepared by adsorption of suitable quantities of bulk purified diphtheria toxoid, tetanus toxoid and pertussis components separately or together onto a mineral carrier such as aluminium hydroxide or hydrated aluminium phosphate. Suitable antimicrobial preservatives may be added.

Only a final bulk vaccine that complies with the following requirements may be used in the preparation of the final lot.

Antimicrobial preservative. Where applicable, determine the amount of antimicrobial preservative by a suitable chemical method. The amount is not less than 85 per cent and not greater than 115 per cent of the intended content.

Sterility (*2.6.1*). Carry out the test for sterility using 10 mL for each medium.

FINAL LOT

Only a final lot that is satisfactory with respect to the test for osmolality and with respect to each of the requirements given below under Identification, Tests and Assay may be released for use.

Provided the tests for residual pertussis toxin and irreversibility of pertussis toxoid, free formaldehyde and antimicrobial preservative and the assay have been carried out with satisfactory results on the final bulk vaccine, they may be omitted on the final lot.

Provided the free formaldehyde content has been determined on the bulk purified antigens or on the final bulk and it has been shown that the content in the final lot will not exceed 0.2 g/L, the test for free formaldehyde may be omitted on the final lot.

Osmolality (*2.2.35*). The osmolality of the vaccine is within the limits approved for the particular preparation.

IDENTIFICATION

A. Diphtheria toxoid is identified by a suitable immunochemical method (*2.7.1*). The following method, applicable to certain vaccines, is given as an example. Dissolve in the vaccine to be examined sufficient *sodium citrate R* to give a 100 g/L solution. Maintain at 37 °C for about 16 h and centrifuge until a clear supernatant is obtained. The clear supernatant reacts with a suitable diphtheria antitoxin, giving a precipitate.

B. Tetanus toxoid is identified by a suitable immunochemical method (*2.7.1*). The following method, applicable to certain vaccines, is given as an example. The clear supernatant obtained as described in identification test A reacts with a suitable tetanus antitoxin, giving a precipitate.

C. The pertussis components are identified by a suitable immunochemical method (*2.7.1*). The following method, applicable to certain vaccines, is given as an example. The clear supernatant obtained as described in identification test A reacts with specific antisera to the pertussis components of the vaccine.

TESTS

Residual pertussis toxin and irreversibility of pertussis toxoid (*2.6.33*). The final lot complies with the test.

Aluminium (*2.5.13*): maximum 1.25 mg per single human dose, if aluminium hydroxide or hydrated aluminium phosphate is used as the adsorbent.

Free formaldehyde (*2.4.18*): maximum 0.2 g/L.

Antimicrobial preservative. Where applicable, determine the amount of antimicrobial preservative by a suitable chemical method. The content is not less than the minimum amount shown to be effective and is not greater than 115 per cent of the quantity stated on the label.

Sterility (*2.6.1*). The vaccine complies with the test for sterility.

ASSAY

Diphtheria component. Carry out one of the prescribed methods for the assay of diphtheria vaccine (adsorbed) (*2.7.6*).

The lower confidence limit (P = 0.95) of the estimated potency is not less than the minimum potency stated on the label.

Unless otherwise justified and authorised, the minimum potency stated on the label is 30 IU per single human dose.

Tetanus component. Carry out one of the prescribed methods for the assay of tetanus vaccine (adsorbed) (*2.7.8*).

The lower confidence limit (P = 0.95) of the estimated potency is not less than 40 IU per single human dose.

Pertussis component. Carry out one of the prescribed methods for the assay of pertussis vaccine (acellular) (*2.7.16*).

The capacity of the vaccine to induce antibodies for each included acellular pertussis antigen is not significantly (P = 0.95) less than that of the reference vaccine.

LABELLING

The label states:

- the minimum number of International Units of diphtheria and tetanus toxoid per single human dose;
- the names and amounts of the pertussis components per single human dose;
- where applicable, that the vaccine is intended for primary vaccination of children and is not necessarily suitable for reinforcing doses or for administration to adults;
- the name and the amount of the adsorbent;
- that the vaccine must be shaken before use;
- that the vaccine is not to be frozen;
- where applicable, that the vaccine contains a pertussis toxin-like protein produced by genetic modification.

07/2012:0445

DIPHTHERIA, TETANUS AND PERTUSSIS (WHOLE CELL) VACCINE (ADSORBED)

Vaccinum diphtheriae, tetani et pertussis ex cellulis integris adsorbatum

DEFINITION

Diphtheria, tetanus and pertussis (whole cell) vaccine (adsorbed) is a preparation of diphtheria formol toxoid and tetanus formol toxoid with a mineral adsorbent to which a suspension of inactivated *Bordetella pertussis* has been added. The formol toxoids are prepared from the toxins produced by the growth of *Corynebacterium diphtheriae* and *Clostridium tetani*, respectively.

PRODUCTION

GENERAL PROVISIONS

Specific toxicity of the diphtheria and tetanus components. The production method is validated to demonstrate that the product, if tested, would comply with the following test: inject subcutaneously 5 times the single human dose stated on the label into each of 5 healthy guinea-pigs, each weighing 250-350 g, that have not previously been treated with any material that will interfere with the test. If within 42 days of the injection any of the animals shows signs of or dies from diphtheria toxaemia or tetanus, the vaccine does not comply

Vaccines

with the test. If more than 1 animal dies from non-specific causes, repeat the test once; if more than 1 animal dies in the second test, the vaccine does not comply with the test.

BULK PURIFIED DIPHTHERIA AND TETANUS TOXOIDS, BULK INACTIVATED B. PERTUSSIS SUSPENSION

The bulk purified diphtheria and tetanus toxoids and the inactivated *B. pertussis* suspension are prepared as described in the monographs *Diphtheria vaccine (adsorbed) (0443)*, *Tetanus vaccine (adsorbed) (0452)* and *Pertussis vaccine (whole cell, adsorbed) (0161)*, respectively, and comply with the requirements prescribed therein.

FINAL BULK VACCINE

The final bulk vaccine is prepared by adsorption of suitable quantities of bulk purified diphtheria toxoid and tetanus toxoid onto a mineral carrier such as hydrated aluminium phosphate or aluminium hydroxide and admixture of an appropriate quantity of a suspension of inactivated *B. pertussis*; the resulting mixture is approximately isotonic with blood. The *B. pertussis* concentration of the final bulk vaccine does not exceed that corresponding to an opacity of 20 IU per single human dose. If 2 or more strains of *B. pertussis* are used, the composition of consecutive lots of the final bulk vaccine shall be consistent with respect to the proportion of each strain as measured in opacity units. Suitable antimicrobial preservatives may be added to the bulk vaccine. Certain antimicrobial preservatives, particularly those of the phenolic type, adversely affect the antigenic activity and must not be used.

Only a final bulk vaccine that complies with the following requirements may be used in the preparation of the final lot.

Antimicrobial preservative. Where applicable, determine the amount of antimicrobial preservative by a suitable chemical method. The amount is not less than 85 per cent and not greater than 115 per cent of the intended amount.

Sterility (*2.6.1*). Carry out the test for sterility using 10 mL for each medium.

FINAL LOT

The final bulk vaccine is distributed aseptically into sterile, tamper-proof containers. The containers are closed so as to prevent contamination.

Only a final lot that is satisfactory with respect to each of the requirements given below under Identification, Tests and Assay may be released for use. Provided the tests for specific toxicity of the pertussis component, antimicrobial preservative and the assay have been carried out with satisfactory results on the final bulk vaccine, they may be omitted on the final lot.

Provided the free formaldehyde content has been determined on the bulk purified antigens or on the final bulk and it has been shown that the content in the final lot will not exceed 0.2 g/L, the test for free formaldehyde may be omitted on the final lot.

IDENTIFICATION

A. Diphtheria toxoid is identified by a suitable immunochemical method (*2.7.1*). The following method, applicable to certain vaccines, is given as an example. Dissolve in the vaccine to be examined sufficient *sodium citrate R* to give a 100 g/L solution. Maintain at 37 °C for about 16 h and centrifuge until a clear supernatant is obtained; reserve the precipitate for identification test C. The clear supernatant reacts with a suitable diphtheria antitoxin, giving a precipitate.

B. Tetanus toxoid is identified by a suitable immunochemical method (*2.7.1*). The following method, applicable to certain vaccines, is given as an example. The clear supernatant obtained during identification test A reacts with a suitable tetanus antitoxin, giving a precipitate.

C. Dissolve in the vaccine to be examined sufficient *sodium citrate R* to give a 100 g/L solution. Maintain at 37 °C for about 16 h and centrifuge to obtain a bacterial precipitate. Other suitable methods for separating the bacteria from the adsorbent may also be used. Identify pertussis vaccine by agglutination of the bacteria from the resuspended precipitate by antisera specific to *B. pertussis* or by the assay.

TESTS

Specific toxicity of the pertussis component. Use not fewer than 5 mice each weighing 14 - 16 g for the vaccine group and for the saline control. Use mice of the same sex or distribute males and females equally between the groups. Allow the animals access to food and water for at least 2 h before injection and during the test. Inject each mouse of the vaccine group intraperitoneally with 0.5 mL, containing a quantity of the vaccine equivalent to not less than half the single human dose. Inject each mouse of the control group with 0.5 mL of a 9 g/L sterile solution of *sodium chloride R*, preferably containing the same amount of antimicrobial preservative as that injected with the vaccine. Weigh the groups of mice immediately before the injection and 72 h and 7 days after the injection. The vaccine complies with the test if: (a) at the end of 72 h the total mass of the group of vaccinated mice is not less than that preceding the injection; (b) at the end of 7 days the average increase in mass per vaccinated mouse is not less than 60 per cent of that per control mouse; and (c) not more than 5 per cent of the vaccinated mice die during the test. The test may be repeated and the results of the tests combined.

Aluminium (*2.5.13*): maximum 1.25 mg per single human dose, if aluminium hydroxide or hydrated aluminium phosphate is used as the adsorbent.

Free formaldehyde (*2.4.18*): maximum 0.2 g/L.

Antimicrobial preservative. Where applicable, determine the amount of antimicrobial preservative by a suitable chemical method. The content is not less than the minimum amount shown to be effective and is not greater than 115 per cent of the quantity stated on the label.

Sterility (*2.6.1*). The vaccine complies with the test for sterility.

ASSAY

Diphtheria component. Carry out one of the prescribed methods for the assay of diphtheria vaccine (adsorbed) (*2.7.6*).

The lower confidence limit (P = 0.95) of the estimated potency is not less than 30 IU per single human dose.

Tetanus component. Carry out one of the prescribed methods for the assay of tetanus vaccine (adsorbed) (*2.7.8*).

If the test is carried out in guinea-pigs, the lower confidence limit (P = 0.95) of the estimated potency is not less than 40 IU per single human dose; if the test is carried out in mice, the lower confidence limit (P = 0.95) of the estimated potency is not less than 60 IU per single human dose.

Pertussis component. Carry out the assay of pertussis vaccine (whole cell) (*2.7.7*).

The estimated potency is not less than 4.0 IU per single human dose and the lower confidence limit (P = 0.95) of the estimated potency is not less than 2.0 IU per single human dose.

LABELLING

The label states:

- the minimum number of International Units of each component per single human dose;
- where applicable, that the vaccine is intended for primary vaccination of children and is not necessarily suitable for reinforcing doses or for administration to adults;
- the name and the amount of the adsorbent;
- that the vaccine must be shaken before use;
- that the vaccine is not to be frozen.

01/2008:2328

DIPHTHERIA, TETANUS AND POLIOMYELITIS (INACTIVATED) VACCINE (ADSORBED, REDUCED ANTIGEN(S) CONTENT)

Vaccinum diphtheriae, tetani et poliomyelitidis inactivatum, antigeni-o(-is) minutum, adsorbatum

DEFINITION

Diphtheria, tetanus and poliomyelitis (inactivated) vaccine (adsorbed, reduced antigen(s) content) is a combined vaccine containing: diphtheria formol toxoid; tetanus formol toxoid; suitable strains of human poliovirus types 1, 2 and 3 grown in suitable cell cultures and inactivated by a validated method; a mineral adsorbent such as aluminium hydroxide or hydrated aluminium phosphate.

The formol toxoids are prepared from the toxins produced by the growth of *Corynebacterium diphtheriae* and *Clostridium tetani* respectively.

The amount of diphtheria toxoid per single human dose is reduced compared to vaccines generally used for primary vaccination; the amount of tetanus toxoid may also be reduced.

PRODUCTION

GENERAL PROVISIONS

The production method shall have been shown to yield consistently vaccines comparable with the vaccine of proven clinical efficacy and safety in man.

Reference vaccine(s). Provided valid assays can be performed, monocomponent reference vaccines may be used for the assays on the combined vaccine. If this is not possible because of interaction between the components of the combined vaccine or because of the difference in composition between the monocomponent reference vaccine and the test vaccine, a batch of combined vaccine shown to be effective in clinical trials or a batch representative thereof is used as a reference vaccine. For the preparation of a representative batch, strict adherence to the production process used for the batch tested in clinical trials is necessary. The reference vaccine may be stabilised by a method that has been shown to have no effect on the assay procedure.

Specific toxicity of the diphtheria and tetanus components. The production method is validated to demonstrate that the product, if tested, would comply with the following test: inject subcutaneously 5 times the single human dose stated on the label into each of 5 healthy guinea-pigs, each weighing 250-350 g, that have not previously been treated with any material that will interfere with the test. If within 42 days of the injection any of the animals shows signs of or dies from diphtheria toxaemia or tetanus, the vaccine does not comply with the test. If more than one animal dies from non-specific causes, repeat the test once; if more than one animal dies in the second test, the vaccine does not comply with the test.

The content of bacterial endotoxins (*2.6.14*) in bulk purified diphtheria toxoid, tetanus toxoid and inactivated monovalent poliovirus harvests is determined to monitor the purification procedure and to limit the amount in the final vaccine. For each component, the content of bacterial endotoxins is less than the limit approved for the particular vaccine and, in any case, the contents are such that the final vaccine contains less than 100 IU per single human dose.

PRODUCTION OF THE COMPONENTS

The production of the components complies with the requirements of the monographs on *Diphtheria vaccine (adsorbed) (0443)*, *Tetanus vaccine (adsorbed) (0452)* and *Poliomyelitis vaccine (inactivated) (0214)*.

FINAL BULK VACCINE

The final bulk vaccine is prepared by adsorption onto a mineral carrier such as aluminium hydroxide or hydrated aluminium phosphate, separately or together, of suitable quantities of bulk purified diphtheria toxoid and tetanus toxoid, and an admixture of suitable quantities of purified monovalent harvests of human poliovirus types 1, 2 and 3 or a suitable quantity of a trivalent pool of such purified monovalent harvests. Suitable antimicrobial preservatives may be added.

Only a final bulk vaccine that complies with the following requirements may be used in the preparation of the final lot.

Bovine serum albumin. Determined on the poliomyelitis components by a suitable immunochemical method (*2.7.1*) after virus harvest and before addition of the adsorbent in the preparation of the final bulk vaccine, the amount of bovine serum albumin is such that the content in the final vaccine will be not more than 50 ng per single human dose.

Antimicrobial preservative. Where applicable, determine the amount of antimicrobial preservative by a suitable chemical method. The amount is not less than 85 per cent and not greater than 115 per cent of the intended content.

Sterility (*2.6.1*). Carry out the test for sterility using 10 mL for each medium.

FINAL LOT

The final bulk vaccine is distributed aseptically into sterile, tamper-proof containers. The containers are closed so as to prevent contamination.

Only a final lot that is satisfactory with respect to the test for osmolality and with respect to each of the requirements given below under Identification, Tests and Assay may be released for use.

Provided the test for antimicrobial preservative and the assays for the diphtheria and tetanus components have been carried out with satisfactory results on the final bulk vaccine, they may be omitted on the final lot.

Provided the free formaldehyde content has been determined on the bulk purified antigens or on the final bulk and it has been shown that the content in the final lot will not exceed 0.2 g/L, the test for free formaldehyde may be omitted on the final lot.

Provided the determination of D-antigen content cannot be carried out on the final lot, it is carried out during preparation of the final bulk before addition of the adsorbent.

Provided the *in vivo* assay for the poliomyelitis component has been carried out with satisfactory results on the final bulk vaccine, it may be omitted on the final lot.

The *in vivo* assay for the poliomyelitis component may be omitted once it has been demonstrated for a given vaccine and for each poliovirus type that the acceptance criteria for the D-antigen determination are such that it yields the same result as the *in vivo* assay in terms of acceptance or rejection of a batch. This demonstration must include testing of subpotent batches, produced experimentally if necessary, for example by heat treatment or other means of diminishing the immunogenic activity. Where there is a significant change in the manufacturing process of the antigens or their formulation, any impact on the *in vivo* and *in vitro* assays must be evaluated, and the need for revalidation considered.

Osmolality (*2.2.35*). The osmolality of the vaccine is within the limits approved for the particular preparation.

IDENTIFICATION

A. Diphtheria toxoid is identified by a suitable immunochemical method (*2.7.1*). The following method, applicable to certain vaccines, is given as an example. Dissolve in the vaccine to be examined sufficient *sodium citrate R* to give a 100 g/L solution. Maintain at 37 °C for about 16 h and centrifuge until a clear supernatant is obtained. The clear supernatant reacts with

Vaccines

a suitable diphtheria antitoxin, giving a precipitate. If a satisfactory result is not obtained with a vaccine adsorbed on aluminium hydroxide, carry out the test as follows. Centrifuge 15 mL of the vaccine to be examined and suspend the residue in 5 mL of a freshly prepared mixture of 1 volume of a 56 g/L solution of *sodium edetate R* and 49 volumes of a 90 g/L solution of *disodium hydrogen phosphate R*. Maintain at 37 °C for not less than 6 h and centrifuge. The clear supernatant reacts with a suitable diphtheria antitoxin, giving a precipitate.

B. Tetanus toxoid is identified by a suitable immunochemical method (*2.7.1*). The following method, applicable to certain vaccines, is given as an example. The clear supernatant obtained as described in identification test A reacts with a suitable tetanus antitoxin, giving a precipitate.

C. The vaccine is shown to contain human poliovirus types 1, 2 and 3 by a suitable immunochemical method (*2.7.1*) such as the determination of D-antigen by enzyme-linked immunosorbent assay (ELISA).

TESTS

Aluminium (*2.5.13*): maximum 1.25 mg per single human dose, if aluminium hydroxide or hydrated aluminium phosphate is used as the adsorbent.

Free formaldehyde (*2.4.18*): maximum 0.2 g/L.

Antimicrobial preservative. Where applicable, determine the amount of antimicrobial preservative by a suitable chemical method. The content is not less than the minimum amount shown to be effective and is not greater than 115 per cent of the quantity stated on the label.

Sterility (*2.6.1*). It complies with the test for sterility.

ASSAY

Diphtheria component. Carry out one of the prescribed methods for the assay of diphtheria vaccine (adsorbed) (*2.7.6*).

The lower confidence limit ($P = 0.95$) of the estimated potency is not less than 2 IU per single human dose.

Tetanus component. Carry out one of the prescribed methods for the assay of tetanus vaccine (adsorbed) (*2.7.8*).

The lower confidence limit ($P = 0.95$) of the estimated potency is not less than 20 IU per single human dose.

Poliomyelitis component

D-antigen content. As a measure of consistency of production, determine the D-antigen content for human poliovirus types 1, 2 and 3 by a suitable immunochemical method (*2.7.1*) following desorption, using a reference preparation calibrated in European Pharmacopoeia Units of D-antigen. For each type, the content, expressed with reference to the amount of D-antigen stated on the label, is within the limits approved for the particular product. *Poliomyelitis vaccine (inactivated) BRP* is calibrated in European Pharmacopoeia Units and intended for use in the assay of D-antigen. The European Pharmacopoeia Unit and the International Unit are equivalent.

In vivo test. The vaccine complies with the *in vivo* assay of poliomyelitis vaccine (inactivated) (*2.7.20*).

LABELLING

The label states:

- the minimum number of International Units of diphtheria and tetanus toxoid per single human dose;
- the types of poliovirus contained in the vaccine;
- the nominal amount of poliovirus of each type (1, 2 and 3), expressed in European Pharmacopoeia Units of D-antigen, per single human dose;
- the type of cells used for production of the poliomyelitis component;
- the name and the amount of the adsorbent;
- that the vaccine must be shaken before use;
- that the vaccine is not to be frozen.

07/2013:1932

DIPHTHERIA, TETANUS, PERTUSSIS (ACELLULAR, COMPONENT) AND HAEMOPHILUS TYPE b CONJUGATE VACCINE (ADSORBED)

Vaccinum diphtheriae, tetani, pertussis sine cellulis ex elementis praeparatum et haemophili stirpis b coniugatum adsorbatum

DEFINITION

Diphtheria, tetanus, pertussis (acellular, component) and haemophilus type b conjugate vaccine (adsorbed) is a combined vaccine composed of: diphtheria formol toxoid; tetanus formol toxoid; individually purified antigenic components of *Bordetella pertussis*; polyribosylribitol phosphate (PRP) covalently bound to a carrier protein; a mineral absorbent such as aluminium hydroxide or hydrated aluminium phosphate. The product is presented either as a tetravalent liquid formulation in the same container, or as a trivalent liquid formulation with the haemophilus component in a separate container, the contents of which are mixed with the other components immediately before use.

The formol toxoids are prepared from the toxins produced by the growth of *Corynebacterium diphtheriae* and *Clostridium tetani* respectively.

The vaccine contains either pertussis toxoid or a pertussis-toxin-like protein free from toxic properties produced by expression of a genetically modified form of the corresponding gene. Pertussis toxoid is prepared from pertussis toxin by a method that renders the toxin harmless while maintaining adequate immunogenic properties and avoiding reversion to toxin. The acellular pertussis component may also contain filamentous haemagglutinin, pertactin (a 69 kDa outer-membrane protein) and other defined components of *B. pertussis* such as fimbrial-2 and fimbrial-3 antigens. The latter 2 antigens may be co-purified. The antigenic composition and characteristics are based on evidence of protection and freedom from unexpected reactions in the target group for which the vaccine is intended.

PRP is a linear copolymer composed of repeated units of 3-β-D-ribofuranosyl-(1→1)-ribitol-5-phosphate $[(C_{10}H_{19}O_{12}P)_n]$, with a defined molecular size and derived from a suitable strain of *Haemophilus influenzae* type b. The carrier protein, when conjugated to PRP, is capable of inducing a T-cell-dependent B-cell immune response to the polysaccharide.

PRODUCTION

GENERAL PROVISIONS

The production method shall have been shown to yield consistently vaccines comparable with the vaccine of proven clinical efficacy and safety in man.

Where the haemophilus component is presented in a separate container, as part of consistency studies the assays of the diphtheria, tetanus and pertussis components are carried out on a suitable number of batches of vaccine reconstituted as for use. For subsequent routine control, the assays of these components may be carried out without mixing with the haemophilus component.

Specific toxicity of the diphtheria and tetanus components. The production method is validated to demonstrate that the product, if tested, would comply with the following test: inject subcutaneously 5 times the single human dose stated on

the label into each of 5 healthy guinea-pigs, each weighing 250-350 g, that have not previously been treated with any material that will interfere with the test. If within 42 days of the injection any of the animals shows signs of or dies from diphtheria toxaemia or tetanus, the vaccine does not comply with the test. If more than 1 animal dies from non-specific causes, repeat the test once; if more than 1 animal dies in the second test, the vaccine does not comply with the test.

The content of bacterial endotoxins (*2.6.14*) in bulk purified diphtheria toxoid, tetanus toxoid, pertussis components and bulk PRP conjugate is determined to monitor the purification procedure and to limit the amount in the final vaccine. For each component, the content of bacterial endotoxins is less than the limit approved for the particular vaccine; where the haemophilus component is presented in a separate container, the contents of the diphtheria, tetanus and pertussis antigens are in any case such that the final vial for these components contains less than 100 IU per single human dose.

The production method is validated to demonstrate that the product, if tested, would comply with the test for abnormal toxicity for immunosera and vaccines for human use (*2.6.9*).

During development studies and wherever revalidation is necessary, it shall be demonstrated by tests in animals that the vaccine induces a T-cell dependent B-cell immune response to PRP.

Where the haemophilus component is presented in a separate container, the production method is validated to demonstrate that the haemophilus component, if tested, would comply with the test for pyrogens (*2.6.8*), carried out as follows: inject per kilogram of the rabbit's mass a quantity of the vaccine equivalent to: 1 µg of PRP for a vaccine with diphtheria toxoid or CRM 197 diphtheria protein as carrier; 0.1 µg of PRP for a vaccine with tetanus toxoid as carrier; 0.025 µg of PRP for a vaccine with OMP (meningococcal group B outer membrane protein complex) as carrier.

Reference vaccine(s). Provided valid assays can be performed, monocomponent reference vaccines may be used for the assays on the combined vaccine. If this is not possible because of interaction between the components of the combined vaccine or because of differences in composition between the monocomponent reference vaccine and the test vaccine, a batch of combined vaccine shown to be effective in clinical trials or a batch representative thereof is used as a reference vaccine. For the preparation of a representative batch, strict adherence to the production process used for the batch tested in clinical trials is necessary. The reference vaccine may be stabilised by a method that has been shown to have no effect on the assay procedure.

PRODUCTION OF THE COMPONENTS

The production of the components complies with the requirements of the monographs *Diphtheria vaccine (adsorbed) (0443)*, *Tetanus vaccine (adsorbed) (0452)*, *Pertussis vaccine (acellular, component, adsorbed) (1356)* and *Haemophilus type b conjugate vaccine (1219)*.

FINAL BULK VACCINE

Different methods of preparation may be used: a final bulk vaccine may be prepared by adsorption, separately or together, of suitable quantities of bulk purified diphtheria toxoid, tetanus toxoid, acellular pertussis components and PRP conjugate onto a mineral carrier such as aluminium hydroxide or hydrated aluminium phosphate; or 2 final bulks may be prepared and filled separately, one containing the diphtheria, tetanus and pertussis components, the other the haemophilus component, which may be freeze-dried. Suitable antimicrobial preservatives may be added.

Only a final bulk vaccine that complies with the following requirements may be used in the preparation of the final lot.

Antimicrobial preservative. Where applicable, determine the amount of antimicrobial preservative by a suitable chemical method. The amount is not less than 85 per cent and not greater than 115 per cent of the intended content.

Sterility (*2.6.1*). Carry out the test for sterility using 10 mL for each medium.

FINAL LOT

Only a final lot that is satisfactory with respect to the test for osmolality shown below and with respect to each of the requirements given below under Identification, Tests and Assay may be released for use.

Provided the test for residual pertussis toxin and irreversibility of pertussis toxoid, the test for antimicrobial preservative and the assay have been carried out with satisfactory results on the final bulk vaccine, they may be omitted on the final lot.

Provided the free formaldehyde content has been determined on the bulk purified antigens or the final bulk and it has been shown that the content in the final lot will not exceed 0.2 g/L, the test for free formaldehyde may be omitted on the final lot.

Osmolality (*2.2.35*). The osmolality of the vaccine, reconstituted where applicable, is within the limits approved for the particular preparation.

pH (*2.2.3*). The pH of the vaccine, reconstituted if necessary, is within the range approved for the particular product.

Free PRP. Unbound PRP is determined after removal of the conjugate, for example by anion-exchange, size-exclusion or hydrophobic chromatography, ultrafiltration or other validated methods. The amount of free PRP is not greater than that approved for the particular product.

IDENTIFICATION

Where the haemophilus component is presented in a separate container: identification tests A, B and C are carried out using the container containing the diphtheria, tetanus and pertussis components; identification test D is carried out on the container containing the haemophilus component.

A. Diphtheria toxoid is identified by a suitable immunochemical method (*2.7.1*). The following method, applicable to certain vaccines, is given as an example. Dissolve in the vaccine to be examined sufficient *sodium citrate R* to give a 100 g/L solution. Maintain at 37 °C for about 16 h and centrifuge until a clear supernatant is obtained. The clear supernatant reacts with a suitable diphtheria antitoxin, giving a precipitate.

B. Tetanus toxoid is identified by a suitable immunochemical method (*2.7.1*). The following method, applicable to certain vaccines, is given as an example. The clear supernatant obtained as described in identification test A reacts with a suitable tetanus antitoxin, giving a precipitate.

C. The pertussis components are identified by a suitable immunochemical method (*2.7.1*). The following method, applicable to certain vaccines, is given as an example. The clear supernatant obtained as described in identification test A reacts with specific antisera to the pertussis components of the vaccine.

D. The haemophilus component is identified by a suitable immunochemical method (*2.7.1*) for PRP.

TESTS

Where the product is presented with the haemophilus component in a separate container: the tests for residual pertussis toxin and irreversibility of pertussis toxoid, aluminium, free formaldehyde, antimicrobial preservative and sterility are carried out on the container with the diphtheria, tetanus and pertussis components; the tests for PRP content, water (where applicable), sterility and bacterial endotoxins are carried out on the container with the haemophilus component.

If the haemophilus component is freeze-dried, some tests may be carried out on the freeze-dried product rather than on the bulk conjugate where the freeze-drying process may affect the component to be tested.

Residual pertussis toxin and irreversibility of pertussis toxoid (*2.6.33*). The final lot complies with the test.

PRP: minimum 80 per cent of the amount of PRP stated on the label. PRP is determined either by assay of ribose (*2.5.31*) or phosphorus (*2.5.18*), by an immunochemical method (*2.7.1*) or by anion-exchange liquid chromatography (*2.2.29*) with pulsed-amperometric detection.

Aluminium (*2.5.13*): maximum 1.25 mg per single human dose, if aluminium hydroxide or hydrated aluminium phosphate is used as the adsorbent.

Free formaldehyde (*2.4.18*): maximum 0.2 g/L.

Antimicrobial preservative. Where applicable, determine the amount of antimicrobial preservative by a suitable chemical method. The content is not less than the minimum amount shown to be effective and is not greater than 115 per cent of the quantity stated on the label.

Water (*2.5.12*): maximum 3.0 per cent for the freeze-dried haemophilus component.

Sterility (*2.6.1*). It complies with the test for sterility.

Bacterial endotoxins (*2.6.14*). The content is within the limits approved by the competent authority for the haemophilus component of the particular product. If any components of the vaccine prevent the determination of endotoxin, a test for pyrogens is carried out as described under General provisions.

ASSAY

Diphtheria component. Carry out one of the prescribed methods for the assay of diphtheria vaccine (adsorbed) (*2.7.6*).

The lower confidence limit ($P = 0.95$) of the estimated potency is not less than the minimum potency stated on the label.

Unless otherwise justified and authorised, the minimum potency stated on the label is 30 IU per single human dose.

Tetanus component. Carry out one of the prescribed methods for the assay of tetanus vaccine (adsorbed) (*2.7.8*).

The lower confidence limit ($P = 0.95$) of the estimated potency is not less than 40 IU per single human dose.

Pertussis component. Carry out one of the prescribed methods for the assay of pertussis vaccine (acellular) (*2.7.16*).

The capacity of the vaccine to induce antibodies for each included acellular pertussis antigen is not significantly ($P = 0.95$) less than that of the reference vaccine.

LABELLING

The label states:

- the minimum number of International Units of diphtheria and tetanus toxoid per single human dose;
- the names and amounts of the pertussis components per single human dose;
- the number of micrograms of PRP per single human dose;
- the type and nominal amount of carrier protein per single human dose;
- where applicable, that the vaccine is intended for primary vaccination of children and is not necessarily suitable for reinforcing doses or for administration to adults;
- the name and the amount of the adsorbent;
- that the vaccine must be shaken before use;
- that the vaccine is not to be frozen;
- where applicable, that the vaccine contains a pertussis toxin-like protein produced by genetic modification.

07/2013:1933

DIPHTHERIA, TETANUS, PERTUSSIS (ACELLULAR, COMPONENT) AND HEPATITIS B (rDNA) VACCINE (ADSORBED)

Vaccinum diphtheriae, tetani, pertussis sine cellulis ex elementis praeparatum et hepatitidis B (ADNr) adsorbatum

DEFINITION

Diphtheria, tetanus, pertussis (acellular, component) and hepatitis B (rDNA) vaccine (adsorbed) is a combined vaccine composed of: diphtheria formol toxoid; tetanus formol toxoid; individually purified antigenic components of *Bordetella pertussis*; hepatitis B surface antigen; a mineral adsorbent such as aluminium hydroxide or hydrated aluminium phosphate.

The formol toxoids are prepared from the toxins produced by the growth of *Corynebacterium diphtheriae* and *Clostridium tetani*, respectively.

The vaccine contains either pertussis toxoid or a pertussis-toxin-like protein free from toxic properties, produced by expression of a genetically modified form of the corresponding gene. Pertussis toxoid is prepared from pertussis toxin by a method that renders the latter harmless while maintaining adequate immunogenic properties and avoiding reversion to toxin. The vaccine may also contain filamentous haemagglutinin, pertactin (a 69 kDa outer-membrane protein) and other defined components of *B. pertussis* such as fimbrial-2 and fimbrial-3 antigens. The latter 2 antigens may be co-purified. The antigenic composition and characteristics are based on evidence of protection and freedom from unexpected reactions in the target group for which the vaccine is intended.

Hepatitis B surface antigen is a component protein of hepatitis B virus; the antigen is obtained by recombinant DNA technology.

PRODUCTION

GENERAL PROVISIONS

The production method shall have been shown to yield consistently vaccines comparable with the vaccine of proven clinical efficacy and safety in man.

Specific toxicity of the diphtheria and tetanus components. The production method is validated to demonstrate that the product, if tested, would comply with the following test: inject subcutaneously 5 times the single human dose stated on the label into each of 5 healthy guinea-pigs, each weighing 250-350 g, that have not previously been treated with any material that will interfere with the test. If within 42 days of the injection any of the animals shows signs of or dies from diphtheria toxaemia or tetanus, the vaccine does not comply with the test. If more than 1 animal dies from non-specific causes, repeat the test once; if more than 1 animal dies in the second test, the vaccine does not comply with the test.

The content of bacterial endotoxins (*2.6.14*) in the bulk purified diphtheria toxoid, tetanus toxoid and pertussis components is determined to monitor the purification procedure and to limit the amount in the final vaccine. For each component, the content of bacterial endotoxins is less than the limit approved for the particular vaccine.

Reference vaccine(s). Provided valid assays can be performed, monocomponent reference vaccines may be used for the assays on the combined vaccine. If this is not possible because of interaction between the components of the combined vaccine or because of differences in composition between the monocomponent reference vaccine and the test vaccine, a batch of combined vaccine shown to be effective in clinical

trials or a batch representative thereof is used as a reference vaccine. For the preparation of a representative batch, strict adherence to the production process used for the batch tested in clinical trials is necessary. The reference vaccine may be stabilised by a method that has been shown to have no effect on the assay procedure.

PRODUCTION OF THE COMPONENTS

The production of the components complies with the requirements of the monographs *Diphtheria vaccine (adsorbed) (0443)*, *Tetanus vaccine (adsorbed) (0452)*, *Pertussis vaccine (acellular, component, adsorbed) (1356)* and *Hepatitis B vaccine (rDNA) (1056)*.

FINAL BULK VACCINE

The final bulk vaccine is prepared by adsorption, separately or together, of suitable quantities of bulk purified diphtheria toxoid, tetanus toxoid, acellular pertussis components and hepatitis B surface antigen onto a mineral carrier such as aluminium hydroxide or hydrated aluminium phosphate. Suitable antimicrobial preservatives may be added.

Only a final bulk vaccine that complies with the following requirements may be used in the preparation of the final lot.

Antimicrobial preservative. Where applicable, determine the amount of antimicrobial preservative by a suitable chemical method. The amount is not less than 85 per cent and not greater than 115 per cent of the intended content.

Sterility (*2.6.1*). Carry out the test for sterility using 10 mL for each medium.

FINAL LOT

Only a final lot that is satisfactory with respect to the test for osmolality and with respect to each of the requirements given below under Identification, Tests and Assay may be released for use.

Provided the test for residual pertussis toxin and irreversibility of pertussis toxoid, the test for antimicrobial preservative and the assays for the diphtheria, tetanus and pertussis components have been carried out with satisfactory results on the final bulk vaccine, they may be omitted on the final lot.

Provided the content of free formaldehyde has been determined on the bulk purified antigens or on the final bulk and it has been shown that the content in the final lot will not exceed 0.2 g/L, the test for free formaldehyde may be omitted on the final lot.

If an *in vivo* assay is used for the hepatitis B component, provided it has been carried out with satisfactory results on the final bulk vaccine, it may be omitted on the final lot.

Osmolality (*2.2.35*). The osmolality of the vaccine is within the limits approved for the particular preparation.

IDENTIFICATION

A. Diphtheria toxoid is identified by a suitable immunochemical method (*2.7.1*). The following method, applicable to certain vaccines, is given as an example. Dissolve in the vaccine to be examined sufficient *sodium citrate R* to give a 100 g/L solution. Maintain at 37 °C for about 16 h and centrifuge until a clear supernatant is obtained. The clear supernatant reacts with a suitable diphtheria antitoxin, giving a precipitate.

B. Tetanus toxoid is identified by a suitable immunochemical method (*2.7.1*). The following method, applicable to certain vaccines, is given as an example. The clear supernatant obtained as described in identification test A reacts with a suitable tetanus antitoxin, giving a precipitate.

C. The pertussis components are identified by a suitable immunochemical method (*2.7.1*). The following method, applicable to certain vaccines, is given as an example. The clear supernatant obtained as described in identification test A reacts with specific antisera to the pertussis components of the vaccine.

D. The assay or, where applicable, the electrophoretic profile, serves also to identify the hepatitis B component of the vaccine.

TESTS

Residual pertussis toxin and irreversibility of pertussis toxoid (*2.6.33*). The final lot complies with the test.

Aluminium (*2.5.13*): maximum 1.25 mg per single human dose, if aluminium hydroxide or hydrated aluminium phosphate is used as the adsorbent.

Free formaldehyde (*2.4.18*): maximum 0.2 g/L.

Antimicrobial preservative. Where applicable, determine the amount of antimicrobial preservative by a suitable chemical method. The content is not less than the minimum amount shown to be effective and is not greater than 115 per cent of the quantity stated on the label.

Sterility (*2.6.1*). The vaccine complies with the test for sterility.

Pyrogens (*2.6.8*). The vaccine complies with the test for pyrogens. Inject the equivalent of 1 human dose into each rabbit.

ASSAY

Diphtheria component. Carry out one of the prescribed methods for the assay of diphtheria vaccine (adsorbed) (*2.7.6*).

The lower confidence limit (P = 0.95) of the estimated potency is not less than the minimum potency stated on the label.

Unless otherwise justified and authorised, the minimum potency stated on the label is 30 IU per single human dose.

Tetanus component. Carry out one of the prescribed methods for the assay of tetanus vaccine (adsorbed) (*2.7.8*).

The lower confidence limit (P = 0.95) of the estimated potency is not less than 40 IU per single human dose.

Pertussis component. Carry out one of the prescribed methods for the assay of pertussis vaccine (acellular) (*2.7.16*).

The capacity of the vaccine to induce antibodies for each included acellular pertussis antigen is not significantly (P = 0.95) less than that of the reference vaccine.

Hepatitis B component. The vaccine complies with the assay of hepatitis B vaccine (*2.7.15*).

LABELLING

The label states:

- the minimum number of International Units of diphtheria and tetanus toxoid per single human dose;
- the names and amounts of the pertussis components per single human dose;
- the amount of HBsAg per single human dose;
- the type of cells used for production of the hepatitis B component;
- where applicable, that the vaccine is intended for primary vaccination of children and is not necessarily suitable for reinforcing doses or for administration to adults;
- the name and the amount of the adsorbent;
- that the vaccine must be shaken before use;
- that the vaccine is not to be frozen;
- where applicable, that the vaccine contains a pertussis toxin-like protein produced by genetic modification.

07/2013:1934

DIPHTHERIA, TETANUS, PERTUSSIS (ACELLULAR, COMPONENT) AND POLIOMYELITIS (INACTIVATED) VACCINE (ADSORBED)

Vaccinum diphtheriae, tetani, pertussis sine cellulis ex elementis praeparatum et poliomyelitidis inactivatum adsorbatum

DEFINITION

Diphtheria, tetanus, pertussis (acellular, component) and poliomyelitis (inactivated) vaccine (adsorbed) is a combined vaccine containing: diphtheria formol toxoid; tetanus formol toxoid; individually purified antigenic components of *Bordetella pertussis*; suitable strains of human poliovirus types 1, 2 and 3 grown in suitable cell cultures and inactivated by a validated method; a mineral adsorbent such as aluminium hydroxide or hydrated aluminium phosphate.

The formol toxoids are prepared from the toxins produced by the growth of *Corynebacterium diphtheriae* and *Clostridium tetani* respectively.

The vaccine contains either pertussis toxoid or a pertussis-toxin-like protein free from toxic properties produced by expression of a genetically modified form of the corresponding gene. Pertussis toxoid is prepared from pertussis toxin by a method that renders the toxin harmless while maintaining adequate immunogenic properties and avoiding reversion to toxin. The vaccine may also contain filamentous haemagglutinin, pertactin (a 69 kDa outer-membrane protein) and other defined components of *B. pertussis* such as fimbrial-2 and fimbrial-3 antigens. The latter 2 antigens may be co-purified. The antigenic composition and characteristics are based on evidence of protection and freedom from unexpected reactions in the target group for which the vaccine is intended.

PRODUCTION

GENERAL PROVISIONS

The production method shall have been shown to yield consistently vaccines comparable with the vaccine of proven clinical efficacy and safety in man.

Specific toxicity of the diphtheria and tetanus components. The production method is validated to demonstrate that the product, if tested, would comply with the following test: inject subcutaneously 5 times the single human dose stated on the label into each of 5 healthy guinea-pigs, each weighing 250-350 g, that have not previously been treated with any material that will interfere with the test. If within 42 days of the injection any of the animals shows signs of or dies from diphtheria toxaemia or tetanus, the vaccine does not comply with the test. If more than 1 animal dies from non-specific causes, repeat the test once; if more than 1 animal dies in the second test, the vaccine does not comply with the test.

The content of bacterial endotoxins (*2.6.14*) in bulk purified diphtheria toxoid, tetanus toxoid, pertussis components and purified, inactivated monovalent poliovirus harvests is determined to monitor the purification procedure and to limit the amount in the final vaccine. For each component, the content of bacterial endotoxins is less than the limit approved for the particular vaccine and, in any case, the contents are such that the final vaccine contains less than 100 IU per single human dose.

Reference vaccine(s). Provided valid assays can be performed, monocomponent reference vaccines may be used for the assays on the combined vaccine. If this is not possible because of interaction between the components of the combined vaccine or because of differences in composition between the monocomponent reference vaccine and the test vaccine, a batch of combined vaccine shown to be effective in clinical trials or a batch representative thereof is used as a reference vaccine. For the preparation of a representative batch, strict adherence to the production process used for the batch tested in clinical trials is necessary. The reference vaccine may be stabilised by a method that has been shown to have no effect on the assay procedure.

PRODUCTION OF THE COMPONENTS

The production of the components complies with the requirements of the monographs *Diphtheria vaccine (adsorbed) (0443)*, *Tetanus vaccine (adsorbed) (0452)*, *Pertussis vaccine (acellular, component, adsorbed) (1356)* and *Poliomyelitis vaccine (inactivated) (0214)*.

FINAL BULK VACCINE

The final bulk vaccine is prepared by adsorption onto a mineral carrier such as aluminium hydroxide or hydrated aluminium phosphate, separately or together, of suitable quantities of bulk purified diphtheria toxoid, tetanus toxoid, acellular pertussis components and admixture of suitable quantities of purified monovalent harvests of human poliovirus types 1, 2 and 3 or a suitable quantity of a trivalent pool of such purified monovalent harvests. Suitable antimicrobial preservatives may be added.

Only a final bulk vaccine that complies with the following requirements may be used in the preparation of the final lot.

Bovine serum albumin. Determined on the poliomyelitis components by a suitable immunochemical method (*2.7.1*) after virus harvest and before addition of the adsorbent in the preparation of the final bulk vaccine, the amount of bovine serum albumin is such that the content in the final vaccine will be not more than 50 ng per single human dose.

Antimicrobial preservative. Where applicable, determine the amount of antimicrobial preservative by a suitable chemical method. The amount is not less than 85 per cent and not greater than 115 per cent of the intended content.

Sterility (*2.6.1*). Carry out the test for sterility using 10 mL for each medium.

FINAL LOT

Only a final lot that is satisfactory with respect to the test for osmolality and with respect to each of the requirements given below under Identification, Tests and Assay may be released for use.

Provided the test for residual pertussis toxin and irreversibility of pertussis toxoid, the test for antimicrobial preservative and the assays for the diphtheria, tetanus and pertussis components have been carried out with satisfactory results on the final bulk vaccine, they may be omitted on the final lot.

Provided the free formaldehyde content has been determined on the bulk purified antigens or on the final bulk and it has been shown that the content in the final lot will not exceed 0.2 g/L, the test for free formaldehyde may be omitted on the final lot.

Provided that the determination of D-antigen content has been carried out with satisfactory results during preparation of the final bulk before addition of the adsorbent, it may be omitted on the final lot.

Provided that the *in vivo* assay for the poliomyelitis component has been carried out with satisfactory results on the final bulk vaccine, it may be omitted on the final lot.

The *in vivo* assay for the poliomyelitis component may be omitted once it has been demonstrated for a given product and for each poliovirus type that the acceptance criteria for the D-antigen determination are such that it yields the same result as the *in vivo* assay in terms of acceptance or rejection of a batch. This demonstration must include testing of subpotent batches, produced experimentally if necessary, for example by heat treatment or other means of diminishing the immunogenic activity. Where there is a significant

change in the manufacturing process of the antigens or their formulation, any impact on the *in vivo* and *in vitro* assays must be evaluated, and the need for revalidation considered.

Osmolality (*2.2.35*). The osmolality of the vaccine is within the limits approved for the particular preparation.

IDENTIFICATION

A. Diphtheria toxoid is identified by a suitable immunochemical method (*2.7.1*). The following method, applicable to certain vaccines, is given as an example. Dissolve in the vaccine to be examined sufficient *sodium citrate R* to give a 100 g/L solution. Maintain at 37 °C for about 16 h and centrifuge until a clear supernatant is obtained. The clear supernatant reacts with a suitable diphtheria antitoxin, giving a precipitate.

B. Tetanus toxoid is identified by a suitable immunochemical method (*2.7.1*). The following method, applicable to certain vaccines, is given as an example. The clear supernatant obtained as described in identification test A reacts with a suitable tetanus antitoxin, giving a precipitate.

C. The pertussis components are identified by a suitable immunochemical method (*2.7.1*). The following method, applicable to certain vaccines, is given as an example. The clear supernatant obtained as described in identification test A reacts with specific antisera to the pertussis components of the vaccine.

D. The vaccine is shown to contain human poliovirus types 1, 2 and 3 by a suitable immunochemical method (*2.7.1*) such as the determination of D-antigen by enzyme-linked immunosorbent assay (ELISA).

TESTS

Residual pertussis toxin and irreversibility of pertussis toxoid (*2.6.33*). The final lot complies with the test.

Aluminium (*2.5.13*): maximum 1.25 mg per single human dose if aluminium hydroxide or hydrated aluminium phosphate is used as the adsorbent.

Free formaldehyde (*2.4.18*): maximum 0.2 g/L.

Antimicrobial preservative. Where applicable, determine the amount of antimicrobial preservative by a suitable chemical method. The content is not less than the minimum amount shown to be effective and is not greater than 115 per cent of the quantity stated on the label.

Sterility (*2.6.1*). It complies with the test for sterility.

ASSAY

Diphtheria component. Carry out one of the prescribed methods for the assay of diphtheria vaccine (adsorbed) (*2.7.6*).

The lower confidence limit (P = 0.95) of the estimated potency is not less than the minimum potency stated on the label.

Unless otherwise justified and authorised, the minimum potency stated on the label is 30 IU per single human dose.

Tetanus component. Carry out one of the prescribed methods for the assay of tetanus vaccine (adsorbed) (*2.7.8*).

The lower confidence limit (P = 0.95) of the estimated potency is not less than 40 IU per single human dose.

Pertussis component. Carry out one of the prescribed methods for the assay of pertussis vaccine (acellular) (*2.7.16*).

The capacity of the vaccine to induce antibodies for each included acellular pertussis antigen is not significantly (P = 0.95) less than that of the reference vaccine.

Poliomyelitis component

D-antigen content. As a measure of consistency of production, determine the D-antigen content for human poliovirus types 1, 2 and 3 by a suitable immunochemical method (*2.7.1*) following desorption, using a reference preparation calibrated in European Pharmacopoeia Units of D-antigen. For each type, the content, expressed with reference to the amount of D-antigen stated on the label, is within the limits approved for the particular product. *Poliomyelitis vaccine (inactivated) BRP* is calibrated in European Pharmacopoeia Units and intended for use in the assay of D-antigen. The European Pharmacopoeia Unit and the International Unit are equivalent.

In vivo test. The vaccine complies with the *in vivo* assay of poliomyelitis vaccine (inactivated) (*2.7.20*).

LABELLING

The label states:

- the minimum number of International Units of diphtheria and tetanus toxoid per single human dose;
- the names and amounts of the pertussis components per single human dose;
- the types of poliovirus contained in the vaccine;
- the nominal amount of poliovirus of each type (1, 2 and 3), expressed in European Pharmacopoeia Units of D-antigen, per single human dose;
- the type of cells used for production of the poliomyelitis component;
- where applicable, that the vaccine is intended for primary vaccination of children and is not necessarily suitable for reinforcing doses or for administration to adults;
- the name and the amount of the adsorbent;
- that the vaccine must be shaken before use;
- that the vaccine is not to be frozen;
- where applicable, that the vaccine contains a pertussis toxin-like protein produced by genetic modification.

07/2013:2329

DIPHTHERIA, TETANUS, PERTUSSIS (ACELLULAR, COMPONENT) AND POLIOMYELITIS (INACTIVATED) VACCINE (ADSORBED, REDUCED ANTIGEN(S) CONTENT)

Vaccinum diphtheriae, tetani, pertussis sine cellulis ex elementis praeparatum et poliomyelitidis inactivatum, antigeni-o(-is) minutum, adsorbatum

DEFINITION

Diphtheria, tetanus, pertussis (acellular, component) and poliomyelitis (inactivated) vaccine (adsorbed, reduced antigen(s) content) is a combined vaccine containing: diphtheria formol toxoid; tetanus formol toxoid; individually purified antigenic components of *Bordetella pertussis*; suitable strains of human poliovirus types 1, 2 and 3 grown in suitable cell cultures and inactivated by a validated method; a mineral adsorbent such as aluminium hydroxide or hydrated aluminium phosphate.

The formol toxoids are prepared from the toxins produced by the growth of *Corynebacterium diphtheriae* and *Clostridium tetani* respectively.

The amount of diphtheria toxoid per single human dose is reduced compared to vaccines generally used for primary vaccination; the amounts of tetanus toxoid and pertussis components may also be reduced.

The vaccine contains either pertussis toxoid or a pertussis-toxin-like protein free from toxic properties produced by expression of a genetically modified form of the corresponding gene. Pertussis toxoid is prepared from pertussis toxin by a method that renders the toxin harmless while maintaining adequate immunogenic properties and avoiding reversion to toxin. The vaccine may also

Vaccines

contain filamentous haemagglutinin, pertactin (a 69 kDa outer-membrane protein) and other defined components of *B. pertussis* such as fimbrial-2 and fimbrial-3 antigens. The latter 2 antigens may be co-purified. The antigenic composition and characteristics are based on evidence of protection and freedom from unexpected reactions in the target group for which the vaccine is intended.

PRODUCTION

GENERAL PROVISIONS

The production method shall have been shown to yield consistently vaccines comparable with the vaccine of proven clinical efficacy and safety in man.

Reference vaccine(s). Provided valid assays can be performed, monocomponent reference vaccines may be used for the assays on the combined vaccine. If this is not possible because of interaction between the components of the combined vaccine or because of differences in composition between the monocomponent reference vaccine and the test vaccine, a batch of combined vaccine shown to be effective in clinical trials or a batch representative thereof is used as a reference vaccine. For the preparation of a representative batch, strict adherence to the production process used for the batch tested in clinical trials is necessary. The reference vaccine may be stabilised by a method that has been shown to have no effect on the assay procedure.

Specific toxicity of the diphtheria and tetanus components. The production method is validated to demonstrate that the product, if tested, would comply with the following test: inject subcutaneously 5 times the single human dose stated on the label into each of 5 healthy guinea-pigs, each weighing 250-350 g, that have not previously been treated with any material that will interfere with the test. If within 42 days of the injection any of the animals shows signs of or dies from diphtheria toxaemia or tetanus, the vaccine does not comply with the test. If more than 1 animal dies from non-specific causes, repeat the test once; if more than 1 animal dies in the second test, the vaccine does not comply with the test.

The content of bacterial endotoxins (*2.6.14*) in bulk purified diphtheria toxoid, tetanus toxoid, pertussis components and inactivated monovalent poliovirus harvests is determined to monitor the purification procedure and to limit the amount in the final vaccine. For each component, the content of bacterial endotoxins is less than the limit approved for the particular vaccine and, in any case, the contents are such that the final vaccine contains less than 100 IU per single human dose.

PRODUCTION OF THE COMPONENTS

The production of the components complies with the requirements of the monographs *Diphtheria vaccine (adsorbed) (0443)*, *Tetanus vaccine (adsorbed) (0452)*, *Pertussis vaccine (acellular, component, adsorbed) (1356)* and *Poliomyelitis vaccine (inactivated) (0214)*.

FINAL BULK VACCINE

The final bulk vaccine is prepared by adsorption onto a mineral carrier such as aluminium hydroxide or hydrated aluminium phosphate, separately or together, of suitable quantities of bulk purified diphtheria toxoid, tetanus toxoid and acellular pertussis components, and an admixture of suitable quantities of purified monovalent harvests of human poliovirus types 1, 2 and 3 or a suitable quantity of a trivalent pool of such purified monovalent harvests. Suitable antimicrobial preservatives may be added.

Only a final bulk vaccine that complies with the following requirements may be used in the preparation of the final lot.

Bovine serum albumin. Determined on the poliomyelitis components by a suitable immunochemical method (*2.7.1*) after virus harvest and before addition of the adsorbent in the preparation of the final bulk vaccine, the amount of bovine serum albumin is such that the content in the final vaccine will be not more than 50 ng per single human dose.

Antimicrobial preservative. Where applicable, determine the amount of antimicrobial preservative by a suitable chemical method. The amount is not less than 85 per cent and not greater than 115 per cent of the intended content.

Sterility (*2.6.1*). Carry out the test for sterility using 10 mL for each medium.

FINAL LOT

The final bulk vaccine is distributed aseptically into sterile, tamper-proof containers. The containers are closed so as to prevent contamination.

Only a final lot that is satisfactory with respect to the test for osmolality and with respect to each of the requirements given below under Identification, Tests and Assay may be released for use.

Provided the test for residual pertussis toxin and irreversibility of pertussis toxoid, the test for antimicrobial preservative and the assays for the diphtheria, tetanus and pertussis components have been carried out with satisfactory results on the final bulk vaccine, they may be omitted on the final lot.

Provided the free formaldehyde content has been determined on the bulk purified antigens or on the final bulk and it has been shown that the content in the final lot will not exceed 0.2 g/L, the test for free formaldehyde may be omitted on the final lot.

Provided the determination of D-antigen content cannot be carried out on the final lot, it is carried out during preparation of the final bulk before addition of the adsorbent.

Provided the *in vivo* assay for the poliomyelitis component has been carried out with satisfactory results on the final bulk vaccine, it may be omitted on the final lot.

The *in vivo* assay for the poliomyelitis component may be omitted once it has been demonstrated for a given vaccine and for each poliovirus type that the acceptance criteria for the D-antigen determination are such that it yields the same result as the *in vivo* assay in terms of acceptance or rejection of a batch. This demonstration must include testing of subpotent batches, produced experimentally if necessary, for example by heat treatment or other means of diminishing the immunogenic activity. Where there is a significant change in the manufacturing process of the antigens or their formulation, any impact on the *in vivo* and *in vitro* assays must be evaluated, and the need for revalidation considered.

Osmolality (*2.2.35*). The osmolality of the vaccine is within the limits approved for the particular preparation.

IDENTIFICATION

A. Diphtheria toxoid is identified by a suitable immunochemical method (*2.7.1*). The following method, applicable to certain vaccines, is given as an example. Dissolve in the vaccine to be examined sufficient *sodium citrate R* to give a 100 g/L solution. Maintain at 37 °C for about 16 h and centrifuge until a clear supernatant is obtained. The clear supernatant reacts with a suitable diphtheria antitoxin, giving a precipitate. If a satisfactory result is not obtained with a vaccine adsorbed on aluminium hydroxide, carry out the test as follows. Centrifuge 15 mL of the vaccine to be examined and suspend the residue in 5 mL of a freshly prepared mixture of 1 volume of a 56 g/L solution of *sodium edetate R* and 49 volumes of a 90 g/L solution of *disodium hydrogen phosphate R*. Maintain at 37 °C for not less than 6 h and centrifuge. The clear supernatant reacts with a suitable diphtheria antitoxin, giving a precipitate.

B. Tetanus toxoid is identified by a suitable immunochemical method (*2.7.1*). The following method, applicable to certain vaccines, is given as an example. The clear supernatant obtained as described in identification test A reacts with a suitable tetanus antitoxin, giving a precipitate.

C. The pertussis components are identified by a suitable immunochemical method (*2.7.1*). The following method, applicable to certain vaccines, is given as an example. The clear supernatant obtained as described in identification test A reacts with a specific antisera to the pertussis components of the vaccine.

D. The vaccine is shown to contain human poliovirus types 1, 2 and 3 by a suitable immunochemical method (*2.7.1*) such as the determination of D-antigen by enzyme-linked immunosorbent assay (ELISA).

TESTS

Residual pertussis toxin and irreversibility of pertussis toxoid (*2.6.33*). The final lot complies with the test.

Aluminium (*2.5.13*): maximum 1.25 mg per single human dose, if aluminium hydroxide or hydrated aluminium phosphate is used as the adsorbent.

Free formaldehyde (*2.4.18*): maximum 0.2 g/L.

Antimicrobial preservative. Where applicable, determine the amount of antimicrobial preservative by a suitable chemical method. The content is not less than the minimum amount shown to be effective and is not greater than 115 per cent of the quantity stated on the label.

Sterility (*2.6.1*). It complies with the test for sterility.

ASSAY

Diphtheria component. Carry out one of the prescribed methods for the assay of diphtheria vaccine (adsorbed) (*2.7.6*).

The lower confidence limit (P = 0.95) of the estimated potency is not less than 2 IU per single human dose.

Tetanus component. Carry out one of the prescribed methods for the assay of tetanus vaccine (adsorbed) (*2.7.8*).

The lower confidence limit (P = 0.95) of the estimated potency is not less than 20 IU per single human dose.

Pertussis component. Carry out one of the prescribed methods for the assay of pertussis vaccine (acellular) (*2.7.16*).

The capacity of the vaccine to induce antibodies for each included acellular pertussis antigen is not significantly (P = 0.95) less than that of the reference vaccine.

Poliomyelitis component

D-antigen content. As a measure of consistency of production, determine the D-antigen content for human poliovirus types 1, 2 and 3 by a suitable immunochemical method (*2.7.1*) following desorption, using a reference preparation calibrated in European Pharmacopoeia Units of D-antigen. For each type, the content, expressed with reference to the amount of D-antigen stated on the label, is within the limits approved for the particular product. *Poliomyelitis vaccine (inactivated) BRP* is calibrated in European Pharmacopoeia Units and intended for use in the assay of D-antigen. The European Pharmacopoeia Unit and the International Unit are equivalent.

In vivo test. The vaccine complies with the *in vivo* assay of poliomyelitis vaccine (inactivated) (*2.7.20*).

LABELLING

The label states:

- the minimum number of International Units of diphtheria and tetanus toxoid per single human dose;
- the names and amounts of the pertussis components per single human dose;
- where applicable, that the vaccine contains a pertussis toxin-like protein produced by genetic modification;
- the types of poliovirus contained in the vaccine;
- the nominal amount of poliovirus of each type (1, 2 and 3), expressed in European Pharmacopoeia Units of D-antigen, per single human dose;
- the type of cells used for production of the poliomyelitis component;
- the name and the amount of the adsorbent;
- that the vaccine must be shaken before use;
- that the vaccine is not to be frozen.

07/2013:2067

DIPHTHERIA, TETANUS, PERTUSSIS (ACELLULAR, COMPONENT), HEPATITIS B (rDNA), POLIOMYELITIS (INACTIVATED) AND HAEMOPHILUS TYPE b CONJUGATE VACCINE (ADSORBED)

Vaccinum diphtheriae, tetani, pertussis sine cellulis ex elementis praeparatum, hepatitidis B (ADNr), poliomyelitidis inactivatum et haemophili stirpis b coniugatum adsorbatum

DEFINITION

Diphtheria, tetanus, pertussis (acellular, component), hepatitis B (rDNA), poliomyelitis (inactivated) and haemophilus type b conjugate vaccine (adsorbed) is a combined vaccine composed of: diphtheria formol toxoid; tetanus formol toxoid; individually purified antigenic components of *Bordetella pertussis*; hepatitis B surface antigen (HBsAg); human poliovirus types 1, 2 and 3 grown in suitable cell cultures and inactivated by a suitable method; polyribosylribitol phosphate (PRP) covalently bound to a carrier protein. The antigens in the vaccine may be adsorbed on a mineral carrier such as aluminium hydroxide or hydrated aluminium phosphate. The product is presented either as a hexavalent liquid formulation in the same container, or as a pentavalent liquid formulation with the haemophilus component in a separate container, the contents of which are mixed with the other components immediately before or during use.

The formol toxoids are prepared from the toxins produced by the growth of *Corynebacterium diphtheriae* and *Clostridium tetani* respectively.

The vaccine contains either pertussis toxoid or a pertussis-toxin-like protein free from toxic properties produced by expression of a genetically modified form of the corresponding gene. Pertussis toxoid is prepared from pertussis toxin by a method that renders the toxin harmless while maintaining adequate immunogenic properties and avoiding reversion to toxin. The acellular pertussis component may also contain filamentous haemagglutinin, pertactin (a 69 kDa outer-membrane protein) and other defined components of *B. pertussis* such as fimbrial-2 and fimbrial-3 antigens. The latter 2 antigens may be co-purified. The antigenic composition and characteristics are based on evidence of protection and freedom from unexpected reactions in the target group for which the vaccine is intended.

Hepatitis B surface antigen is a component protein of hepatitis B virus; the antigen is obtained by recombinant DNA technology.

PRP is a linear copolymer composed of repeated units of 3-β-D-ribofuranosyl-(1→1)-ribitol-5-phosphate $[(C_{10}H_{19}O_{12}P)_n]$, with a defined molecular size and derived from a suitable strain of *Haemophilus influenzae* type b. The carrier protein, when conjugated to PRP, is capable of inducing a T-cell-dependent B-cell immune response to the polysaccharide.

Vaccines

PRODUCTION

GENERAL PROVISIONS

The production method shall have been shown to yield consistently vaccines comparable with the vaccine of proven clinical efficacy and safety in man.

If the vaccine is presented with the haemophilus component in a separate container, as part of consistency studies the assays of the diphtheria, tetanus, pertussis, hepatitis B and poliomyelitis components are carried out on a suitable number of batches of vaccine reconstituted as for use. For subsequent routine control, the assays of these components may be carried out without mixing with the haemophilus component.

Specific toxicity of the diphtheria and tetanus components. The production method is validated to demonstrate that the product, if tested, would comply with the following test: inject subcutaneously 5 times the single human dose stated on the label into each of 5 healthy guinea-pigs, each weighing 250-350 g, that have not previously been treated with any material that will interfere with the test. If within 42 days of the injection any of the animals shows signs of or dies from diphtheria toxaemia or tetanus, the vaccine does not comply with the test. If more than 1 animal dies from non-specific causes, repeat the test once; if more than 1 animal dies in the second test, the vaccine does not comply with the test.

The content of bacterial endotoxins (*2.6.14*) in bulk purified diphtheria toxoid, tetanus toxoid and pertussis components, hepatitis B surface antigen, purified, inactivated monovalent poliovirus harvests and bulk PRP conjugate is determined to monitor the purification procedure and to limit the amount in the final vaccine. For each component, the content of bacterial endotoxins is not greater than the limit approved.

During development studies and wherever revalidation is necessary, a test for pyrogens in rabbits (*2.6.8*) is carried out by injection of a suitable dose of the final lot. The vaccine is shown to be acceptable with respect to absence of pyrogenic activity.

During development studies and wherever revalidation is necessary, it shall be demonstrated by tests in animals that the vaccine induces a T-cell-dependent B-cell immune response to PRP.

The stability of the final lot and relevant intermediates is evaluated using one or more indicator tests. For the haemophilus component, such tests may include determination of molecular size, determination of free PRP in the conjugate and kinetics of depolymerisation. Taking account of the results of the stability testing, release requirements are set for these indicator tests to ensure that the vaccine will be satisfactory at the end of the period of validity.

Reference vaccine(s). Provided valid assays can be performed, monocomponent reference vaccines may be used for the assays on the combined vaccine. If this is not possible because of interaction between the components of the combined vaccine or because of differences in composition between the monocomponent reference vaccine and the test vaccine, a batch of combined vaccine shown to be effective in clinical trials or a batch representative thereof is used as a reference vaccine. For the preparation of a representative batch, strict adherence to the production process used for the batch tested in clinical trials is necessary. The reference vaccine may be stabilised by a method that has been shown to have no effect on the assay procedure.

PRODUCTION OF THE COMPONENTS

The production of the components complies with the requirements of the monographs *Diphtheria vaccine (adsorbed) (0443)*, *Tetanus vaccine (adsorbed) (0452)*, *Pertussis vaccine (acellular, component, adsorbed) (1356)*, *Hepatitis B vaccine (rDNA) (1056)*, *Poliomyelitis vaccine (inactivated) (0214)* and *Haemophilus type b conjugate vaccine (1219)*.

FINAL BULKS

Vaccine with all components in the same container. The final bulk is prepared by adsorption, separately or together, of suitable quantities of bulk purified diphtheria toxoid, tetanus toxoid, acellular pertussis components and hepatitis B surface antigen onto a mineral carrier such as aluminium hydroxide or hydrated aluminium phosphate and admixture of a suitable quantity of PRP conjugate and suitable quantities of purified and inactivated, monovalent harvests of human poliovirus types 1, 2 and 3 or a suitable quantity of a trivalent pool of such monovalent harvests. Suitable antimicrobial preservatives may be added.

Vaccine with the haemophilus component in a separate container. The final bulk of diphtheria, tetanus, pertussis, hepatitis B and poliovirus component is prepared by adsorption, separately or together, of suitable quantities of bulk purified diphtheria toxoid, tetanus toxoid, acellular pertussis components and hepatitis B surface antigen onto a mineral carrier such as aluminium hydroxide or hydrated aluminium phosphate and admixture of suitable quantities of purified and inactivated, monovalent harvests of human poliovirus types 1, 2 and 3 or a suitable pool of such monovalent harvests. This final bulk is filled separately. Suitable antimicrobial preservatives may be added. The final bulk of the haemophilus component is prepared by dilution of the bulk conjugate to the final concentration with a suitable diluent. A stabiliser may be added.

Only final bulks that comply with the following requirements may be used in the preparation of the final lot.

Bovine serum albumin. Determined on the poliomyelitis components by a suitable immunochemical method (*2.7.1*) after purification of the harvests and before preparation of the final bulk vaccine, before addition of the adsorbent, the amount of bovine serum albumin is such that the content in the final vaccine will be not more than 50 ng per single human dose.

Antimicrobial preservative. Where applicable, determine the amount of antimicrobial preservative by a suitable chemical method. The amount is not less than 85 per cent and not greater than 115 per cent of the intended content.

Sterility (*2.6.1*). Carry out the test for sterility using 10 mL for each medium.

FINAL LOT

Where the haemophilus component is in a separate container, the final bulk of the haemophilus component is freeze-dried. Only a final lot that is satisfactory with respect to the test for osmolality shown below and with respect to each of the requirements given below under Identification, Tests and Assay may be released for use.

Provided that the test for osmolality, the test for residual pertussis toxin and irreversibility of pertussis toxoid, the test for antimicrobial preservative and the assays for the diphtheria, tetanus and pertussis components have been carried out with satisfactory results on the final bulk vaccine, they may be omitted on the final lot.

Provided the free formaldehyde content has been determined on the bulk purified antigens and the purified monovalent harvests or the trivalent pool of polioviruses or the final bulk and it has been shown that the content in the final lot will not exceed 0.2 g/L, the test for free formaldehyde may be omitted on the final lot.

Provided that the test for bovine serum albumin has been carried out with satisfactory results on the trivalent pool of inactivated monovalent harvests of polioviruses or on the final bulk vaccine, it may be omitted on the final lot.

If an *in vivo* assay is used for the hepatitis B component, provided it has been carried out with satisfactory results on the final bulk vaccine, it may be omitted on the final lot.

Provided the *in vivo* assay for the poliomyelitis component has been carried out with satisfactory results on the final bulk vaccine, it may be omitted on the final lot.

The *in vivo* assay for the poliomyelitis component may be omitted once it has been demonstrated for a given product and for each poliovirus type that the acceptance criteria for the D-antigen determination are such that it yields the same result as the *in vivo* assay in terms of acceptance or rejection of a batch. This demonstration must include testing of subpotent batches, produced experimentally if necessary, for example by heat treatment or other means of diminishing the immunogenic activity. Where there is a significant change in the manufacturing process of the antigens or their formulation, any impact on the *in vivo* and *in vitro* assays must be evaluated, and the need for revalidation considered.

Free PRP. For vaccines with all components in the same container, the free PRP content is determined on the non-absorbed fraction. Unbound PRP is determined on the haemophilus component after removal of the conjugate, for example by anion-exchange, size-exclusion or hydrophobic chromatography, ultrafiltration or other validated methods. The amount of free PRP is not greater than that approved for the particular product.

Bacterial endotoxins (*2.6.14*): less than the limit approved for the product concerned.

Osmolality (*2.2.35*). The osmolality of the vaccine, reconstituted where applicable, is within the limits approved for the particular preparation.

IDENTIFICATION

If the vaccine is presented with the haemophilus component in a separate container: identification tests A, B, C, D and E are carried out using the container with the diphtheria, tetanus, pertussis, hepatitis B and poliomyelitis components; identification test F is carried out on the container with the haemophilus components.

A. Diphtheria toxoid is identified by a suitable immunochemical method (*2.7.1*). The following method is given as an example. Dissolve in the vaccine to be examined sufficient *sodium citrate R* to give a 100 g/L solution. Maintain at 37 °C for about 16 h and centrifuge until a clear supernatant is obtained. The clear supernatant reacts with a suitable diphtheria antitoxin, giving a precipitate.
B. Tetanus toxoid is identified by a suitable immunochemical method (*2.7.1*). The following method is given as an example. The clear supernatant obtained during identification test A reacts with a suitable tetanus antitoxin, giving a precipitate.
C. The clear supernatant obtained during identification test A reacts with specific antisera to the pertussis components of the vaccine when examined by suitable immunochemical methods (*2.7.1*).
D. The hepatitis B component is identified by a suitable immunochemical method (*2.7.1*), for example the *in vitro* assay, or by a suitable electrophoretic method (*2.2.31*).
E. The vaccine is shown to contain human poliovirus types 1, 2 and 3 by a suitable immunochemical method (*2.7.1*), such as determination of D-antigen by enzyme-linked immunosorbent assay (ELISA).
F. The PRP and its carrier protein are identified by a suitable immunochemical method (*2.7.1*).

TESTS

If the product is presented with the haemophilus component in a separate container, the tests for residual pertussis toxin and irreversibility of pertussis toxoid, free formaldehyde, aluminium, antimicrobial preservative and sterility are carried out on the container with the diphtheria, tetanus, pertussis, poliomyelitis and hepatitis B components; the tests for PRP, water, antimicrobial preservative (where applicable), aluminium (where applicable) and sterility are carried out on the container with the haemophilus component.

Some tests for the haemophilus component are carried out on the freeze-dried product rather than on the bulk conjugate where the freeze-drying process may affect the component to be tested.

Residual pertussis toxin and irreversibility of pertussis toxoid (*2.6.33*). The final lot complies with the test.

PRP: minimum 80 per cent of the amount of PRP stated on the label, for a vaccine with the haemophilus component in a separate container.

For a vaccine with all components in the same container: the PRP content determined on the non-absorbed fraction is not less than that approved for the product.

PRP is determined either by assay of ribose (*2.5.31*) or phosphorus (*2.5.18*), by an immunochemical method (*2.7.1*) or by anion-exchange liquid chromatography (*2.2.29*) with pulsed-amperometric detection.

Aluminium (*2.5.13*): maximum 1.25 mg per single human dose, if aluminium hydroxide or hydrated aluminium phosphate is used as the adsorbent.

Free formaldehyde (*2.4.18*): maximum 0.2 g/L of free formaldehyde per single human dose.

Antimicrobial preservative. Where applicable, determine the amount of antimicrobial preservative by a suitable chemical method. The content is not less than the minimum amount shown to be effective and is not greater than 115 per cent of the quantity stated on the label.

Water (*2.5.12*): maximum 3.0 per cent for the freeze-dried haemophilus component.

Sterility (*2.6.1*). It complies with the test for sterility.

ASSAY

Diphtheria component. Carry out one of the prescribed methods for the assay of diphtheria vaccine (adsorbed) (*2.7.6*).

The lower confidence limit (P = 0.95) of the estimated potency is not less than the minimum potency stated on the label.

Unless otherwise justified and authorised, the minimum potency stated on the label is 30 IU per single human dose.

Tetanus component. Carry out one of the prescribed methods for the assay of tetanus vaccine (adsorbed) (*2.7.8*).

The lower confidence limit (P = 0.95) of the estimated potency is not less than 40 IU per single human dose.

Pertussis component. Carry out one of the prescribed methods for the assay of pertussis vaccine (acellular) (*2.7.16*).

The capacity of the vaccine to induce antibodies for each included acellular pertussis antigen is not significantly (P = 0.95) less than that of the reference vaccine.

Hepatitis B component. The vaccine complies with the assay of hepatitis B vaccine (*2.7.15*).

Poliomyelitis component

D-antigen content. As a measure of consistency of production, determine the D-antigen content for human poliovirus types 1, 2 and 3 by a suitable immunochemical method (*2.7.1*) following desorption, using a reference preparation calibrated in European Pharmacopoeia Units of D-antigen. For each type, the content, expressed with reference to the amount of D-antigen stated on the label, is within the limits approved for the particular product. *Poliomyelitis vaccine (inactivated) BRP* is calibrated in European Pharmacopoeia Units and intended for use in the assay of D-antigen. The European Pharmacopoeia Unit and the International Unit are equivalent.

In vivo test. The vaccine complies with the *in vivo* assay of poliomyelitis vaccine (inactivated) (*2.7.20*).

LABELLING

The label states:

- the minimum number of International Units of diphtheria and tetanus toxoid per single human dose;
- the names and amounts of the pertussis components per single human dose;
- the amount of HBsAg per single human dose;
- the nominal amount of poliovirus of each type (1, 2 and 3), expressed in European Pharmacopoeia Units of D-antigen, per single human dose;
- the types of cells used for production of the poliomyelitis and the hepatitis B components;
- the number of micrograms of PRP per single human dose;
- the type and nominal amount of carrier protein per single human dose;
- where applicable, that the vaccine is intended for primary vaccination of children and is not necessarily suitable for reinforcing doses or for administration to adults;
- the name and the amount of the adsorbent;
- that the vaccine must be shaken before use;
- that the vaccine is not to be frozen;
- where applicable, that the vaccine contains a pertussis toxin-like protein produced by genetic modification.

07/2013:2065

DIPHTHERIA, TETANUS, PERTUSSIS (ACELLULAR, COMPONENT), POLIOMYELITIS (INACTIVATED) AND HAEMOPHILUS TYPE b CONJUGATE VACCINE (ADSORBED)

Vaccinum diphtheriae, tetani, pertussis sine cellulis ex elementis praeparatum, poliomyelitidis inactivatum et haemophili stirpis b coniugatum adsorbatum

Vaccines

DEFINITION

Diphtheria, tetanus, pertussis (acellular, component), poliomyelitis (inactivated) and haemophilus type b conjugate vaccine (adsorbed) is a combined vaccine composed of: diphtheria formol toxoid; tetanus formol toxoid; individually purified antigenic components of *Bordetella pertussis*; suitable strains of human poliovirus types 1, 2 and 3 grown in suitable cell cultures and inactivated by a suitable method; polyribosylribitol phosphate (PRP) covalently bound to a carrier protein; a mineral adsorbent such as aluminium hydroxide or hydrated aluminium phosphate. The product is presented either as a pentavalent liquid formulation in the same container, or as a tetravalent liquid formulation with the freeze-dried haemophilus component in a separate container, the contents of which are mixed with the other components immediately before use.

The formol toxoids are prepared from the toxins produced by the growth of *Corynebacterium diphtheriae* and *Clostridium tetani* respectively.

The vaccine contains either pertussis toxoid or a pertussis-toxin-like protein free from toxic properties produced by expression of a genetically modified form of the corresponding gene. Pertussis toxoid is prepared from pertussis toxin by a method that renders the toxin harmless while maintaining adequate immunogenic properties and avoiding reversion to toxin. The acellular pertussis component may also contain filamentous haemagglutinin, pertactin (a 69 kDa outer-membrane protein) and other defined components of *B. pertussis* such as fimbrial-2 and fimbrial-3 antigens. The latter 2 antigens may be co-purified. The antigenic composition and characteristics are based on evidence of protection and freedom from unexpected reactions in the target group for which the vaccine is intended.

PRP is a linear copolymer composed of repeated units of 3-β-D-ribofuranosyl-(1→1)-ribitol-5-phosphate $[(C_{10}H_{19}O_{12}P)_n]$, with a defined molecular size and derived from a suitable strain of *Haemophilus influenzae* type b. The carrier protein, when conjugated to PRP, is capable of inducing a T-cell-dependent B-cell immune response to the polysaccharide.

PRODUCTION

GENERAL PROVISIONS

The production method shall have been shown to yield consistently vaccines comparable with the vaccine of proven clinical efficacy and safety in man.

Specific toxicity of the diphtheria and tetanus components. The production method is validated to demonstrate that the product, if tested, would comply with the following test: inject subcutaneously 5 times the single human dose stated on the label into each of 5 healthy guinea-pigs, each weighing 250-350 g, that have not previously been treated with any material that will interfere with the test. If within 42 days of the injection any of the animals shows signs of or dies from diphtheria toxaemia or tetanus, the vaccine does not comply with the test. If more than 1 animal dies from non-specific causes, repeat the test once; if more than 1 animal dies in the second test, the vaccine does not comply with the test.

Bacterial endotoxins (*2.6.14*). The content of bacterial endotoxins in bulk purified diphtheria toxoid, tetanus toxoid, pertussis components, purified, inactivated monovalent poliovirus harvests and bulk PRP conjugate is determined to monitor the purification procedure and to limit the amount in the final vaccine. For each component, the content of bacterial endotoxins is less than the limit approved by the competent authority for the particular vaccine.

Development and consistency studies. During development studies and wherever revalidation is necessary, it shall be demonstrated by tests in animals that the vaccine induces a T-cell-dependent B-cell immune response to PRP.

Where the haemophilus component is presented in a separate container, and as part of consistency studies, the assays of the diphtheria, tetanus, pertussis and poliomyelitis components are carried out on a suitable number of batches of vaccine reconstituted as for use. For subsequent routine control, the assays of these components may be carried out without mixing with the haemophilus component.

Where the haemophilus component is presented in a separate container, the production method is validated to demonstrate that the haemophilus component, if tested, would comply with the test for pyrogens (*2.6.8*), carried out as follows: inject per kilogram of the rabbit's mass a quantity of the vaccine equivalent to: 1 µg of PRP for a vaccine with diphtheria toxoid or CRM 197 diphtheria protein as carrier; 0.1 µg of PRP for a vaccine with tetanus toxoid as carrier; 0.025 µg of PRP for a vaccine with OMP (meningococcal group B outer membrane protein complex) as carrier.

Reference vaccine(s). Provided valid assays can be performed, monocomponent reference vaccines may be used for the assays on the combined vaccine. If this is not possible because of interaction between the components of the combined vaccine or because of differences in composition between the monocomponent reference vaccine and the test vaccine, a batch of combined vaccine shown to be effective in clinical trials or a batch representative thereof is used as a reference vaccine. For the preparation of a representative batch, strict adherence to the production process used for the batch tested in clinical trials is necessary. The reference vaccine may be stabilised by a method that has been shown to have no effect on the assay procedure.

PRODUCTION OF THE COMPONENTS

The production of the components complies with the requirements of the monographs *Diphtheria vaccine (adsorbed) (0443)*, *Tetanus vaccine (adsorbed) (0452)*, *Pertussis vaccine (acellular, component, adsorbed) (1356)*, *Poliomyelitis vaccine (inactivated) (0214)* and *Haemophilus type b conjugate vaccine (1219)*.

FINAL BULKS

The final tetravalent bulk of the diphtheria, tetanus, pertussis and poliomyelitis components is prepared by adsorption, separately or together, of suitable quantities of bulk purified diphtheria toxoid, bulk purified tetanus toxoid and bulk purified acellular pertussis components onto a mineral carrier such as aluminium hydroxide or hydrated aluminium phosphate, and admixture of suitable quantities of purified, monovalent harvests of human poliovirus types 1, 2 and 3 or a suitable quantity of a trivalent pool of such monovalent harvests. Suitable antimicrobial preservatives may be added.

Where the vaccine is presented with all 5 components in the same container, the final bulk is prepared by addition of a suitable quantity of the haemophilus bulk conjugate to the tetravalent bulk. Where the haemophilus component is presented in a separate container, the final bulk is prepared by dilution of the bulk conjugate with suitable diluents for freeze-drying. A stabiliser may be added.

Only final bulks that comply with the following requirements may be used in the preparation of the final lot.

Bovine serum albumin. Determined on the poliomyelitis components by a suitable immunochemical method (*2.7.1*) during preparation of the final bulk vaccine, before addition of the adsorbent, the amount of bovine serum albumin is such that the content in the final vaccine will be not more than 50 ng per single human dose.

Antimicrobial preservative. Where applicable, determine the amount of antimicrobial preservative by a suitable chemical method. The amount is not less than 85 per cent and not greater than 115 per cent of the intended content.

Sterility (*2.6.1*). Carry out the test for sterility using 10 mL for each medium.

FINAL LOT

Where the haemophilus component is presented in a separate container, the final bulk of the haemophilus component is freeze-dried.

Only a final lot that is satisfactory with respect to the test for osmolality shown below and with respect to each of the requirements given below under Identification, Tests and Assay may be released for use.

Provided that the test for residual pertussis toxin and irreversibility of pertussis toxoid, the test for antimicrobial preservative and the assay have been carried out with satisfactory results on the final bulk vaccine, they may be omitted on the final lot.

Provided that the free formaldehyde content has been determined on the bulk purified antigens and the purified monovalent harvests or the trivalent pool of polioviruses or the final bulk and it has been shown that the content in the final lot will not exceed 0.2 g/L, the test for free formaldehyde may be omitted on the final lot.

If the *in vivo* assay for the poliomyelitis component is used, provided it has been carried out with satisfactory results on the final bulk vaccine, it may be omitted on the final lot.

The *in vivo* assay for the poliomyelitis component may be omitted once it has been demonstrated for a given product and for each poliovirus type that the acceptance criteria for the D-antigen determination are such that it yields the same result as the *in vivo* assay in terms of acceptance or rejection of a batch. This demonstration must include testing of subpotent batches, produced experimentally if necessary, for example by heat treatment or other means of diminishing the immunogenic activity. Where there is a significant change in the manufacturing process of the antigens or their formulation, any impact on the *in vivo* and *in vitro* assays must be evaluated, and the need for revalidation considered.

Osmolality (*2.2.35*). The osmolality of the vaccine, reconstituted where applicable, is within the limits approved for the particular preparation.

Free PRP. Where the haemophilus component is presented in liquid formulation, the presence of other components may interfere in the assay and it may not be possible to separate the PRP from the adjuvant. The presence of free PRP may be determined on the bulk conjugate prior to the addition of other components or on the non-adsorbed fraction in the final combination.

Where the haemophilus component is presented in a separate container, a number of methods have been used to separate free PRP from the conjugate, including precipitation, gel filtration, size-exclusion, anion-exchange and hydrophobic chromatography, ultrafiltration and ultracentrifugation. The free PRP can then be quantified by a range of techniques, including high-performance anion-exchange chromatography with pulsed amperometric detection (HPAEC-PAD) and immunoassays with anti-PRP antibodies. The amount of free PRP is not greater than that approved for the particular product.

IDENTIFICATION

Identification tests A, B, C and D are carried out using the vial containing the diphtheria, tetanus, pertussis and poliomyelitis components; identification test E is carried out either on the vial containing all 5 components, or on the vial containing the haemophilus component alone.

A. Diphtheria toxoid is identified by a suitable immunochemical method (*2.7.1*). The following method, applicable to certain vaccines, is given as an example. Dissolve in the vaccine to be examined sufficient *sodium citrate R* to give a 100 g/L solution. Maintain at 37 °C for about 16 h and centrifuge until a clear supernatant is obtained. The clear supernatant reacts with a suitable diphtheria antitoxin, giving a precipitate.
B. Tetanus toxoid is identified by a suitable immunochemical method (*2.7.1*). The following method, applicable to certain vaccines, is given as an example. The clear supernatant obtained during identification test A reacts with a suitable tetanus antitoxin, giving a precipitate.
C. The pertussis components are identified by a suitable immunochemical method (*2.7.1*). The following method, applicable to certain vaccines, is given as an example. The clear supernatant obtained during identification test A reacts with specific antisera to the pertussis components of the vaccine.
D. The vaccine is shown to contain human poliovirus types 1, 2 and 3 by a suitable immunochemical method (*2.7.1*), such as determination of D-antigen by enzyme-linked immunosorbent assay (ELISA).
E. The haemophilus component is identified by a suitable immunochemical method (*2.7.1*) for PRP.

TESTS

Where the haemophilus component is presented in a separate container, the tests for residual pertussis toxin and irreversibility of pertussis toxoid, aluminium, free formaldehyde, antimicrobial preservative and sterility are carried out on the container with the diphtheria, tetanus, pertussis and poliomyelitis components; the tests for PRP, water, sterility and bacterial entodoxins are carried out on the container with the haemophilus component alone.

Where the haemophilus component is presented in a separate container, some tests may be carried out on the freeze-dried product rather than on the bulk conjugate where the freeze-drying process may affect the component to be tested.

Residual pertussis toxin and irreversibility of pertussis toxoid (*2.6.33*). The final lot complies with the test.

PRP: not less than 80 per cent of the amount of PRP stated on the label. PRP is determined either by assay of ribose (*2.5.31*) or phosphorus (*2.5.18*), by an immunochemical method (*2.7.1*) or by anion-exchange liquid chromatography (*2.2.29*) with pulsed-amperometric detection.

Aluminium (*2.5.13*): maximum 1.25 mg per single human dose, if aluminium hydroxide or hydrated aluminium phosphate is used as the adsorbent.

Free formaldehyde (*2.4.18*): maximum 0.2 g/L.

Antimicrobial preservative. Where applicable, determine the amount of antimicrobial preservative by a suitable chemical method. The content is not less than the minimum amount shown to be effective and is not greater than 115 per cent of the quantity stated on the label.

Water (*2.5.12*): maximum 3.0 per cent for the freeze-dried haemophilus component.

Sterility (*2.6.1*). It complies with the test for sterility.

Bacterial endotoxins (*2.6.14*). The content is within the limits approved by the competent authority for the haemophilus component of the particular product. If any components of the vaccine prevent the determination of endotoxin, a test for pyrogens is carried out as described under General provisions.

ASSAY

Diphtheria component. Carry out one of the prescribed methods for the assay of diphtheria vaccine (adsorbed) (*2.7.6*).

Unless otherwise justified and authorised, the lower confidence limit (P = 0.95) of the estimated potency is not less than 30 IU per single human dose.

Tetanus component. Carry out one of the prescribed methods for the assay of tetanus vaccine (adsorbed) (*2.7.8*).

The lower confidence limit (P = 0.95) of the estimated potency is not less than 40 IU per single human dose.

Pertussis component. Carry out one of the prescribed methods for the assay of pertussis vaccine (acellular) (*2.7.16*).

The capacity of the vaccine to induce antibodies for each included acellular pertussis antigen is not significantly (P = 0.95) less than that of the reference vaccine.

Poliomyelitis component

D-antigen content. As a measure of consistency of production, determine the D-antigen content for human poliovirus types 1, 2 and 3 by a suitable immunochemical method (*2.7.1*) following desorption, using a reference preparation calibrated in European Pharmacopoeia Units of D-antigen. For each type, the content, expressed with reference to the amount of D-antigen stated on the label, is within the limits approved for the particular product. *Poliomyelitis vaccine (inactivated) BRP* is calibrated in European Pharmacopoeia Units and intended for use in the assay of D-antigen. The European Pharmacopoeia Unit and the International Unit are equivalent.

In vivo test. The vaccine complies with the *in vivo* assay of poliomyelitis vaccine (inactivated) (*2.7.20*).

LABELLING

The label states:

- the minimum number of International Units of diphtheria and tetanus toxoid per single human dose;
- the names and amounts of the pertussis components per single human dose;
- the nominal amount of poliovirus of each type (1, 2 and 3), expressed in European Pharmacopoeia Units of D-antigen, per single human dose;
- the type of cells used for production of the poliomyelitis component;
- the number of micrograms of PRP per single human dose;
- the type and nominal amount of carrier protein per single human dose;
- where applicable, that the vaccine is intended for primary vaccination of children and is not necessarily suitable for reinforcing doses or for administration to adults;
- the name and the amount of the adsorbent;
- that the vaccine must be shaken before use;
- that the vaccine is not to be frozen;
- where applicable, that the vaccine contains a pertussis-toxin-like protein produced by genetic modification.

07/2012:2061

DIPHTHERIA, TETANUS, PERTUSSIS (WHOLE CELL) AND POLIOMYELITIS (INACTIVATED) VACCINE (ADSORBED)

Vaccinum diphtheriae, tetani, pertussis ex cellulis integris et poliomyelitidis inactivatum adsorbatum

DEFINITION

Diphtheria, tetanus, pertussis (whole cell) and poliomyelitis (inactivated) vaccine (adsorbed) is a combined vaccine containing: diphtheria formol toxoid; tetanus formol toxoid; an inactivated suspension of *Bordetella pertussis*; suitable strains of human poliovirus types 1, 2 and 3 grown in suitable cell cultures and inactivated by a validated method; a mineral adsorbent such as aluminium hydroxide or hydrated aluminium phosphate.

The formol toxoids are prepared from the toxins produced by the growth of *Corynebacterium diphtheriae* and *Clostridium tetani* respectively.

PRODUCTION

GENERAL PROVISIONS

The production method shall have been shown to yield consistently vaccines comparable with the vaccine of proven clinical efficacy and safety in man.

Reference vaccine(s). Provided valid assays can be performed, monocomponent reference vaccines may be used for the assays on the combined vaccine. If this is not possible because of interaction between the components of the combined vaccine or because of the difference in composition between monocomponent reference vaccine and the test vaccine, a batch of combined vaccine shown to be effective in clinical trials or a batch representative thereof is used as a reference vaccine. For the preparation of a representative batch, strict adherence to the production process used for the batch tested in clinical trials is necessary. The reference vaccine may be stabilised by a method that has been shown to have no effect on the assay procedure.

Specific toxicity of the diphtheria and tetanus components. The production method is validated to demonstrate that the product, if tested, would comply with the following test: inject subcutaneously 5 times the single human dose stated on the label into each of 5 healthy guinea-pigs, each weighing 250-350 g, that have not previously been treated with any material that will interfere with the test. If within 42 days of the injection any of the animals shows signs of or dies from diphtheria toxaemia or tetanus, the vaccine does not comply with the test. If more than 1 animal dies from non-specific causes, repeat the test once; if more than 1 animal dies in the second test, the vaccine does not comply with the test.

PRODUCTION OF THE COMPONENTS

The production of the components complies with the requirements of the monographs *Diphtheria vaccine (adsorbed) (0443)*, *Tetanus vaccine (adsorbed) (0452)*, *Pertussis vaccine (whole cell, adsorbed) (0161)* and *Poliomyelitis vaccine (inactivated) (0214)*.

FINAL BULK VACCINE

The final bulk vaccine is prepared by adsorption onto a mineral carrier such as aluminium hydroxide or hydrated aluminium phosphate, separately or together, of suitable quantities of bulk purified diphtheria toxoid and bulk purified tetanus toxoid and admixture of suitable quantities of an inactivated suspension of *B. pertussis* and purified monovalent harvests of human poliovirus types 1, 2 and 3 or a suitable quantity of a trivalent pool of such purified monovalent harvests. Suitable antimicrobial preservatives may be added.

Only a final bulk vaccine that complies with the following requirements may be used in the preparation of the final lot.

Bovine serum albumin. Determined on the poliomyelitis components by a suitable immunochemical method (*2.7.1*) during preparation of the final bulk vaccine, before addition of the adsorbent, the amount of bovine serum albumin is such that the content in the final vaccine will be not more than 50 ng per single human dose.

Antimicrobial preservative. Where applicable, determine the amount of antimicrobial preservative by a suitable chemical method. The amount is not less than 85 per cent and not greater than 115 per cent of the intended content.

Sterility (*2.6.1*). Carry out the test for sterility using 10 mL for each medium.

FINAL LOT

Only a final lot that is satisfactory with respect to the test for osmolality and with respect to each of the requirements given below under Identification, Tests and Assay may be released for use.

Provided that the tests for specific toxicity of the pertussis component and antimicrobial preservative, and the assays for the diphtheria, tetanus and pertussis components have been carried out with satisfactory results on the final bulk vaccine, they may be omitted on the final lot.

Provided that the free formaldehyde content has been determined on the bulk purified antigens, the inactivated *B. pertussis* suspension and the purified monovalent harvests or the trivalent pool of polioviruses or on the final bulk and it has been shown that the content in the final lot will not exceed 0.2 g/L, the test for free formaldehyde may be omitted on the final lot.

Provided that the *in vivo* assay for the poliomyelitis component has been carried out with satisfactory results on the final bulk vaccine, it may be omitted on the final lot.

The *in vivo* assay for the poliomyelitis component may be omitted once it has been demonstrated for a given product and for each poliovirus type that the acceptance criteria for the D-antigen determination are such that it yields the same result as the *in vivo* assay in terms of acceptance or rejection of a batch. This demonstration must include testing of subpotent batches, produced experimentally if necessary, for example by heat treatment or other means of diminishing the immunogenic activity. Where there is a significant change in the manufacturing process of the antigens or their formulation, any impact on the *in vivo* and *in vitro* assays must be evaluated, and the need for revalidation considered.

Osmolality (*2.2.35*). The osmolality of the vaccine is within the limits approved for the particular preparation.

IDENTIFICATION

A. Diphtheria toxoid is identified by a suitable immunochemical method (*2.7.1*). The following method, applicable to certain vaccines, is given as an example. Dissolve in the vaccine to be examined sufficient *sodium citrate R* to give a 100 g/L solution. Maintain at 37 °C for about 16 h and centrifuge until a clear supernatant is obtained. The clear supernatant reacts with a suitable diphtheria antitoxin, giving a precipitate.

B. Tetanus toxoid is identified by a suitable immunochemical method (*2.7.1*). The following method, applicable to certain vaccines, is given as an example. The clear supernatant obtained during identification test A reacts with a suitable tetanus antitoxin, giving a precipitate.

C. The centrifugation residue obtained in identification A may be used. Other suitable methods for separating the bacteria from the adsorbent may also be used. Identify pertussis vaccine by agglutination of the bacteria from the resuspended precipitate by antisera specific to *B. pertussis* or by the assay of the pertussis component prescribed under Assay.

D. The vaccine is shown to contain human poliovirus types 1, 2 and 3 by a suitable immunochemical method (*2.7.1*) such as the determination of D-antigen by enzyme-linked immunosorbent assay (ELISA).

TESTS

Specific toxicity of the pertussis component. Use not fewer than 5 healthy mice each weighing 14-16 g for the vaccine group and for the saline control. Use mice of the same sex or distribute males and females equally between the groups. Allow the animals access to food and water for at least 2 h before injection and during the test. Inject each mouse of the vaccine group intraperitoneally with 0.5 mL, containing a quantity of the vaccine equivalent to not less than half the single human dose. Inject each mouse of the control group with 0.5 mL of a 9 g/L sterile solution of *sodium chloride R*, preferably containing the same amount of antimicrobial preservative as that injected with the vaccine. Weigh the groups of mice immediately before the injection and 72 h and 7 days after the injection. The vaccine complies with the test if: (a) at the end of 72 h the total mass of the group of vaccinated mice is not less than that preceding the injection; (b) at the end of 7 days the average increase in mass per vaccinated mouse is not less than 60 per cent of that per control mouse; and (c) not more than 5 per cent of the vaccinated mice die during the test. The test may be repeated and the results of the tests combined.

Aluminium (*2.5.13*): maximum 1.25 mg per single human dose, if aluminium hydroxide or hydrated aluminium phosphate is used as the adsorbent.

Free formaldehyde (*2.4.18*): maximum 0.2 g/L.

Antimicrobial preservative. Where applicable, determine the amount of antimicrobial preservative by a suitable chemical method. The content is not less than the minimum amount shown to be effective and is not greater than 115 per cent of the quantity stated on the label.

Sterility (*2.6.1*). It complies with the test for sterility.

ASSAY

Diphtheria component. Carry out one of the prescribed methods for the assay of diphtheria vaccine (adsorbed) (*2.7.6*).

The lower confidence limit (P = 0.95) of the estimated potency is not less than 30 IU per single human dose.

Tetanus component. Carry out one of the prescribed methods for the assay of tetanus vaccine (adsorbed) (*2.7.8*).

If the test is carried out in guinea pigs, the lower confidence limit (P = 0.95) of the estimated potency is not less than 40 IU per single human dose; if the test is carried out in mice, the lower confidence limit (P = 0.95) of the estimated potency is not less than 60 IU per single human dose.

Pertussis component. Carry out the assay of pertussis vaccine (whole cell) (*2.7.7*).

The estimated potency is not less than 4.0 IU per single human dose and the lower confidence limit ($P = 0.95$) of the estimated potency is not less than 2.0 IU per single human dose.

Poliomyelitis component

D-antigen content. As a measure of consistency of production, determine the D-antigen content for human poliovirus types 1, 2 and 3 by a suitable immunochemical method (*2.7.1*) following desorption, using a reference preparation calibrated in European Pharmacopoeia Units of D-antigen. For each type, the content, expressed with reference to the amount of D-antigen stated on the label, is within the limits approved for the particular product. *Poliomyelitis vaccine (inactivated) BRP* is calibrated in European Pharmacopoeia Units and intended for use in the assay of D-antigen. The European Pharmacopoeia Unit and the International Unit are equivalent.

In vivo test. The vaccine complies with the *in vivo* assay of poliomyelitis vaccine (inactivated) (*2.7.20*).

LABELLING

The label states:

- the minimum number of International Units of diphtheria and tetanus toxoid per single human dose;
- the minimum number of International Units of pertussis vaccine per single human dose;
- the nominal amount of poliovirus of each type (1, 2 and 3), expressed in European Pharmacopoeia Units of D-antigen, per single human dose;
- the type of cells used for production of the poliomyelitis component;
- where applicable, that the vaccine is intended for primary vaccination of children and is not necessarily suitable for reinforcing doses or for administration to adults;
- the name and the amount of the adsorbent;
- that the vaccine must be shaken before use;
- that the vaccine is not to be frozen.

07/2012:2066

DIPHTHERIA, TETANUS, PERTUSSIS (WHOLE CELL), POLIOMYELITIS (INACTIVATED) AND HAEMOPHILUS TYPE b CONJUGATE VACCINE (ADSORBED)

Vaccinum diphtheriae, tetani, pertussis ex cellulis integris, poliomyelitidis inactivatum et haemophili stirpis b coniugatum adsorbatum

DEFINITION

Diphtheria, tetanus, pertussis (whole cell), poliomyelitis (inactivated) and haemophilus type b conjugate vaccine (adsorbed) is a combined vaccine composed of: diphtheria formol toxoid; tetanus formol toxoid; an inactivated suspension of *Bordetella pertussis*; suitable strains of human poliovirus types 1, 2 and 3 grown in suitable cell cultures and inactivated by a suitable method; polyribosylribitol phosphate (PRP) covalently bound to a carrier protein; a mineral adsorbent such as aluminium hydroxide or hydrated aluminium phosphate. The product is presented with the haemophilus component in a separate container, the contents of which are mixed with the other components immediately before use.

The formol toxoids are prepared from the toxins produced by the growth of *Corynebacterium diphtheriae* and *Clostridium tetani* respectively.

PRP is a linear copolymer composed of repeated units of 3-β-D-ribofuranosyl-(1→1)-ribitol-5-phosphate $[(C_{10}H_{19}O_{12}P)_n]$, with a defined molecular size and derived from a suitable strain of *Haemophilus influenzae* type b. The carrier protein, when conjugated to PRP, is capable of inducing a T-cell-dependent B-cell immune response to the polysaccharide.

PRODUCTION

GENERAL PROVISIONS

The production method shall have been shown to yield consistently vaccines comparable with the vaccine of proven clinical efficacy and safety in man.

During development studies and wherever revalidation is necessary, it shall be demonstrated by tests in animals that the vaccine induces a T-cell-dependent B-cell immune response to PRP.

As part of consistency studies the assays of the diphtheria, tetanus, pertussis and poliomyelitis components are carried out on a suitable number of batches of vaccine reconstituted as for use. For subsequent routine control, the assays of these components may be carried out without mixing with the haemophilus component.

For the haemophilus component, the production method is validated to demonstrate that the haemophilus component, if tested, would comply with the test for pyrogens (*2.6.8*), carried out as follows: inject per kilogram of the rabbit's mass a quantity of the vaccine equivalent to: 1 µg of PRP for a vaccine with diphtheria toxoid or CRM 197 diphtheria protein as carrier; 0.1 µg of PRP for a vaccine with tetanus toxoid as carrier; 0.025 µg of PRP for a vaccine with OMP (meningococcal group B outer membrane protein complex) as carrier.

Reference vaccine(s). Provided valid assays can be performed, monocomponent reference vaccines may be used for the assays on the combined vaccine. If this is not possible because of interaction between the components of the combined vaccine or because of the difference in composition between monocomponent reference vaccine and the test vaccine, a batch of combined vaccine shown to be effective in clinical trials or a batch representative thereof is used as a reference vaccine. For the preparation of a representative batch, strict adherence to the production process used for the batch tested in clinical trials is necessary. The reference vaccine may be stabilised by a method that has been shown to have no effect on the assay procedure.

Specific toxicity of the diphtheria and tetanus components. The production method is validated to demonstrate that the product, if tested, would comply with the following test: inject subcutaneously 5 times the single human dose stated on the label into each of 5 healthy guinea-pigs, each weighing 250-350 g, that have not previously been treated with any material that will interfere with the test. If within 42 days of the injection any of the animals shows signs of or dies from diphtheria toxaemia or tetanus, the vaccine does not comply with the test. If more than 1 animal dies from non-specific causes, repeat the test once; if more than 1 animal dies in the second test, the vaccine does not comply with the test.

PRODUCTION OF THE COMPONENTS

The production of the components complies with the requirements of the monographs *Diphtheria vaccine (adsorbed) (0443)*, *Tetanus vaccine (adsorbed) (0452)*, *Pertussis vaccine (whole cell, adsorbed) (0161)*, *Poliomyelitis vaccine (inactivated) (0214)* and *Haemophilus type b conjugate vaccine (1219)*.

FINAL BULKS

The final bulk of the diphtheria, tetanus, pertussis and poliomyelitis components is prepared by adsorption, separately or together, of suitable quantities of bulk purified diphtheria toxoid, and bulk purified tetanus toxoid onto a mineral carrier such as aluminium hydroxide or hydrated aluminium phosphate and admixture of suitable quantities of an inactivated suspension of *B. pertussis* and of purified, monovalent harvests of human poliovirus types 1, 2 and 3 or a suitable quantity of a trivalent pool of such monovalent harvests. Suitable antimicrobial preservatives may be added.

The final bulk of the haemophilus component is prepared by dilution of the bulk conjugate to the final concentration with a suitable diluent. A stabiliser may be added.

Only final bulks that comply with the following requirements may be used in the preparation of the final lot.

Bovine serum albumin. Determined on the poliomyelitis components by a suitable immunochemical method (*2.7.1*) during preparation of the final bulk vaccine, before addition of the adsorbent, the amount of bovine serum albumin is such that the content in the final vaccine will be not more than 50 ng per single human dose.

Antimicrobial preservative. Where applicable, determine the amount of antimicrobial preservative by a suitable chemical method. The amount is not less than 85 per cent and not greater than 115 per cent of the intended content.

Sterility (*2.6.1*). Carry out the test for sterility using 10 mL for each medium.

FINAL LOT

The final bulk of the haemophilus component is freeze-dried.

Only a final lot that is satisfactory with respect to the test for osmolality shown below and with respect to each of the requirements given below under Identification, Tests and Assay may be released for use.

Provided the tests for specific toxicity of the pertussis component and antimicrobial preservative, and the assays for the diphtheria, tetanus and pertussis components have been carried out with satisfactory results on the final bulk vaccine, they may be omitted on the final lot.

Provided the free formaldehyde content has been determined on the bulk purified antigens, the inactivated *B. pertussis* suspension and the purified monovalent harvests or the trivalent pool of polioviruses or on the final bulk and it has been shown that the content in the final lot will not exceed 0.2 g/L, the test for free formaldehyde may be omitted on the final lot.

Provided the *in vivo* assay for the poliomyelitis component has been carried out with satisfactory results on the final bulk vaccine, it may be omitted on the final lot.

The *in vivo* assay for the poliomyelitis component may be omitted once it has been demonstrated for a given product and for each poliovirus type that the acceptance criteria for the D-antigen determination are such that it yields the same result as the *in vivo* assay in terms of acceptance or rejection of a batch. This demonstration must include testing of subpotent batches, produced experimentally if necessary, for example by heat treatment or other means of diminishing the immunogenic activity. Where there is a significant change in the manufacturing process of the antigens or their formulation, any impact on the *in vivo* and *in vitro* assays must be evaluated, and the need for revalidation considered.

Osmolality (*2.2.35*). The osmolality of the vaccine, reconstituted where applicable, is within the limits approved for the particular preparation.

Free PRP. Unbound PRP is determined on the haemophilus component after removal of the conjugate, for example by anion-exchange, size-exclusion or hydrophobic chromatography, ultrafiltration or other validated methods. The amount of free PRP is not greater than that approved for the particular product.

IDENTIFICATION

Identification tests A, B, C and D are carried out using the vial containing the diphtheria, tetanus, pertussis and poliomyelitis components; identification test E is carried out on the vial containing the haemophilus component.

A. Diphtheria toxoid is identified by a suitable immunochemical method (*2.7.1*). The following method, applicable to certain vaccines, is given as an example. Dissolve in the vaccine to be examined sufficient *sodium citrate R* to give a 100 g/L solution. Maintain at 37 °C for about 16 h and centrifuge until a clear supernatant is obtained. The clear supernatant reacts with a suitable diphtheria antitoxin, giving a precipitate.

B. Tetanus toxoid is identified by a suitable immunochemical method (*2.7.1*). The following method, applicable to certain vaccines, is given as an example. The clear supernatant obtained during identification test A reacts with a suitable tetanus antitoxin, giving a precipitate.

C. The centrifugation residue obtained in identification A may be used. Other suitable methods for separating the bacteria from the adsorbent may also be used. Identify pertussis vaccine by agglutination of the bacteria from the resuspended precipitate by antisera specific to *B. pertussis* or by the assay of the pertussis component prescribed under Assay.

D. The vaccine is shown to contain human poliovirus types 1, 2 and 3 by a suitable immunochemical method (*2.7.1*), such as determination of D-antigen by enzyme-linked immunosorbent assay (ELISA).

E. The haemophilus component is identified by a suitable immunochemical method (*2.7.1*) for PRP.

TESTS

The tests for specific toxicity of the pertussis component, aluminium, free formaldehyde, antimicrobial preservative and sterility are carried out on the container with diphtheria, tetanus, pertussis and poliomyelitis components; the tests for PRP, water, sterility and bacterial endotoxins are carried out on the container with the haemophilus component.

Some tests for the haemophilus component may be carried out on the freeze-dried product rather than on the bulk conjugate where the freeze-drying process may affect the component to be tested.

Specific toxicity of the pertussis component. Use not fewer than 5 healthy mice each weighing 14-16 g, for the vaccine group and for the saline control. Use mice of the same sex or distribute males and females equally between the groups. Allow the animals access to food and water for at least 2 h before injection and during the test. Inject each mouse of the vaccine group intraperitoneally with 0.5 mL, containing a quantity of the vaccine equivalent to not less than half the single human dose. Inject each mouse of the control group with 0.5 mL of a 9 g/L sterile solution of *sodium chloride R*, preferably containing the same amount of antimicrobial preservative as that injected with the vaccine. Weigh the groups of mice immediately before the injection and 72 h and 7 days after the injection. The vaccine complies with the test if: (a) at the end of 72 h the total mass of the group of vaccinated mice is not less than that preceding the injection; (b) at the end of 7 days the average increase in mass per vaccinated mouse is not less than 60 per cent of that per control mouse; and (c) not more than 5 per cent of the vaccinated mice die during the test. The test may be repeated and the results of the tests combined.

PRP: minimum 80 per cent of the amount of PRP stated on the label. PRP is determined either by assay of ribose (*2.5.31*) or phosphorus (*2.5.18*), by an immunochemical method (*2.7.1*) or by anion-exchange liquid chromatography (*2.2.29*) with pulsed-amperometric detection.

Aluminium (*2.5.13*): maximum 1.25 mg per single human dose, if aluminium hydroxide or hydrated aluminium phosphate is used as the adsorbent.

Free formaldehyde (*2.4.18*): maximum 0.2 g/L.

Antimicrobial preservative. Where applicable, determine the amount of antimicrobial preservative by a suitable chemical method. The content is not less than the minimum amount shown to be effective and is not greater than 115 per cent of the quantity stated on the label.

Water (*2.5.12*): maximum 3.0 per cent for the haemophilus component.

Sterility (*2.6.1*). It complies with the test for sterility.

Bacterial endotoxins (*2.6.14*). The content is within the limits approved by the competent authority for the haemophilus component of the particular product. If any components of the vaccine prevent the determination of endotoxin, a test for pyrogens is carried out as described under General provisions.

ASSAY

Diphtheria component. Carry out one of the prescribed methods for the assay of diphtheria vaccine (adsorbed) (*2.7.6*).

The lower confidence limit ($P = 0.95$) of the estimated potency is not less than 30 IU per single human dose.

Tetanus component. Carry out one of the prescribed methods for the assay of tetanus vaccine (adsorbed) (*2.7.8*).

If the test is carried out in guinea-pigs, the lower confidence limit ($P = 0.95$) of the estimated potency is not less than 40 IU per single human dose; if the test is carried out in mice, the lower confidence limit ($P = 0.95$) of the estimated potency is not less than 60 IU per single human dose.

Pertussis component. Carry out the assay of pertussis vaccine (whole cell) (*2.7.7*).

The estimated potency is not less than 4.0 IU per single human dose and the lower confidence limit ($P = 0.95$) of the estimated potency is not less than 2.0 IU per single human dose.

Poliomyelitis component

D-antigen content. As a measure of consistency of production, determine the D-antigen content for human poliovirus types 1, 2 and 3 by a suitable immunochemical method (*2.7.1*) following desorption using a reference preparation calibrated in European Pharmacopoeia Units of D-antigen. For each type, the content, expressed with reference to the amount of D-antigen stated on the label, is within the limits approved for the particular product. *Poliomyelitis vaccine (inactivated) BRP* is calibrated in European Pharmacopoeia Units and intended for use in the assay of D-antigen. The European Pharmacopoeia Unit and the International Unit are equivalent.

In vivo test. The vaccine complies with the *in vivo* assay of poliomyelitis vaccine (inactivated) (*2.7.20*).

LABELLING

The label states:

- the minimum number of International Units of diphtheria and tetanus toxoid per single human dose;
- the minimum number of International Units of pertussis vaccine per single human dose;
- the nominal amount of poliovirus of each type (1, 2 and 3), expressed in European Pharmacopoeia Units of D-antigen, per single human dose;
- the type of cells used for production of the poliomyelitis component;
- the number of micrograms of PRP per single human dose;
- the type and nominal amount of carrier protein per single human dose;
- where applicable, that the vaccine is intended for primary vaccination of children and is not necessarily suitable for reinforcing doses or for administration to adults;
- the name and the amount of the adsorbent;
- that the vaccine must be shaken before use;
- that the vaccine is not to be frozen.

01/2008:0443
corrected 6.0

DIPHTHERIA VACCINE (ADSORBED)

Vaccinum diphtheriae adsorbatum

DEFINITION

Diphtheria vaccine (adsorbed) is a preparation of diphtheria formol toxoid with a mineral adsorbent. The formol toxoid is prepared from the toxin produced by the growth of *Corynebacterium diphtheriae*.

PRODUCTION

GENERAL PROVISIONS

Specific toxicity. The production method is validated to demonstrate that the product, if tested, would comply with the following test: inject subcutaneously 5 times the single human dose stated on the label into each of 5 healthy guinea-pigs, each weighing 250-350 g, that have not previously been treated with any material that will interfere with the test. If within 42 days of the injection any of the animals shows signs of or dies from diphtheria toxaemia, the vaccine does not comply with the test. If more than 1 animal dies from non-specific causes, repeat the test once; if more than 1 animal dies in the second test, the vaccine does not comply with the test.

BULK PURIFIED TOXOID

For the production of diphtheria toxin, from which toxoid is prepared, seed cultures are managed in a defined seed-lot system in which toxinogenicity is conserved and, where necessary, restored by deliberate reselection. A highly toxinogenic strain of *Corynebacterium diphtheriae* with known origin and history is grown in a suitable liquid medium. At the end of cultivation, the purity of each culture is tested and contaminated cultures are discarded. Toxin-containing culture medium is separated aseptically from the bacterial mass as soon as possible. The toxin content (Lf per millilitre) is checked (*2.7.27*) to monitor consistency of production. Single harvests may be pooled to prepare the bulk purified toxoid. The toxin is purified to remove components likely to cause adverse reactions in humans. The purified toxin is detoxified with formaldehyde by a method that avoids destruction of the immunogenic potency of the toxoid and reversion of the toxoid to toxin, particularly on exposure to heat. Alternatively, purification may be carried out after detoxification.

Only bulk purified toxoid that complies with the following requirements may be used in the preparation of the final bulk vaccine.

Sterility (*2.6.1*). Carry out the test for sterility using 10 mL for each medium.

Absence of toxin and irreversibility of toxoid. Using the same buffer solution as for the final vaccine, without adsorbent, prepare a solution of bulk purified toxoid at 100 Lf/mL. Divide the solution into 2 equal parts. Maintain 1 part at 5 ± 3 °C and the other at 37 °C for 6 weeks. Carry out a test in Vero cells for active diphtheria toxin using 50 µL/well of both samples. The sample should not contain antimicrobial

preservatives and detoxifying agents should be determined to be below the concentration toxic to Vero cells. Non-specific toxicity may be eliminated by dialysis.

Use freshly trypsinised Vero cells at a suitable concentration, for example 2.5×10^5 mL^{-1} and a reference diphtheria toxin diluted in 100 Lf/mL diphtheria toxoid. A suitable reference diphtheria toxin will contain either not less than 100 LD_{50}/mL or 67 to 133 lr/100 in 1 Lf and 25 000 to 50 000 minimal reacting doses for guinea-pig skin in 1 Lf (*diphtheria toxin BRP* is suitable for use as the reference toxin). Dilute the toxin in 100 Lf/mL diphtheria toxoid to a suitable concentration, for example 2×10^{-4} Lf/mL. Prepare serial twofold dilutions of the diluted diphtheria toxin and use undiluted test samples (50 µL/well). Distribute them in the wells of a sterile tissue culture plate containing a medium suitable for Vero cells. To ascertain that any cytotoxic effect noted is specific to diphtheria toxin, prepare in parallel dilutions where the toxin is neutralised by a suitable concentration of diphtheria antitoxin, for example 100 IU/mL. Include control wells without toxoid or toxin and with non-toxic toxoid at 100 Lf/mL on each plate to verify normal cell growth. Add cell suspension to each well, seal the plates and incubate at 37 °C for 5-6 days. Cytotoxic effect is judged to be present where there is complete metabolic inhibition of the Vero cells, indicated by the pH indicator of the medium. Confirm cytopathic effect by microscopic examination or suitable staining such as MTT dye. The test is invalid if 5×10^{-5} Lf/mL of reference diphtheria toxin in 100 Lf/mL toxoid has no cytotoxic effect on Vero cells or if the cytotoxic effect of this amount of toxin is not neutralised in the wells containing diphtheria antitoxin. The bulk purified toxoid complies with the test if no toxicity neutralisable by antitoxin is found in either sample.

Antigenic purity (*2.7.27*). Not less than 1500 Lf per milligram of protein nitrogen.

FINAL BULK VACCINE

The final bulk vaccine is prepared by adsorption of a suitable quantity of bulk purified toxoid onto a mineral carrier such as hydrated aluminium phosphate or aluminium hydroxide; the resulting mixture is approximately isotonic with blood. Suitable antimicrobial preservatives may be added. Certain antimicrobial preservatives, particularly those of the phenolic type, adversely affect the antigenic activity and must not be used.

Only a final bulk vaccine that complies with the following requirements may be used in the preparation of the final lot.

Antimicrobial preservative. Where applicable, determine the amount of antimicrobial preservative by a suitable chemical method. The amount is not less than 85 per cent and not greater than 115 per cent of the intended amount.

Sterility (*2.6.1*). Carry out the test for sterility using 10 mL for each medium.

FINAL LOT

The final bulk vaccine is distributed aseptically into sterile, tamper-proof containers. The containers are closed so as to prevent contamination.

Only a final lot that is satisfactory with respect to each of the requirements given below under Identification, Tests and Assay may be released for use. Provided the test for antimicrobial preservative and the assay have been carried out with satisfactory results on the final bulk vaccine, they may be omitted on the final lot.

Provided the free formaldehyde content has been determined on the bulk purified antigens or on the final bulk and it has been shown that the content in the final lot will not exceed 0.2 g/L, the test for free formaldehyde may be omitted on the final lot.

IDENTIFICATION

Diphtheria toxoid is identified by a suitable immunochemical method (*2.7.1*). The following method, applicable to certain vaccines, is given as an example. Dissolve in the vaccine to be examined sufficient *sodium citrate R* to give a 100 g/L solution. Maintain at 37 °C for about 16 h and centrifuge until a clear supernatant is obtained. The clear supernatant reacts with a suitable diphtheria antitoxin, giving a precipitate.

TESTS

Aluminium (*2.5.13*): maximum 1.25 mg per single human dose, if aluminium hydroxide or hydrated aluminium phosphate is used as the absorbent.

Free formaldehyde (*2.4.18*): maximum 0.2 g/L.

Antimicrobial preservative. Where applicable, determine the amount of antimicrobial preservative by a suitable chemical method. The content is not less than the minimum amount shown to be effective and is not greater than 115 per cent of the quantity stated on the label.

Sterility (*2.6.1*). The vaccine complies with the test for sterility.

ASSAY

Carry out one of the prescribed methods for the assay of diphtheria vaccine (adsorbed) (*2.7.6*).

The lower confidence limit ($P = 0.95$) of the estimated potency is not less than 30 IU per single human dose.

LABELLING

The label states:

- the minimum number of International Units per single human dose,
- where applicable, that the vaccine is intended for primary vaccination of children and is not necessarily suitable for reinforcing doses or for administration to adults,
- the name and the amount of the adsorbent,
- that the vaccine must be shaken before use,
- that the vaccine is not to be frozen.

01/2008:0646

DIPHTHERIA VACCINE (ADSORBED, REDUCED ANTIGEN CONTENT)

Vaccinum diphtheriae, antigeniis minutum, adsorbatum

DEFINITION

Diphtheria vaccine (adsorbed, reduced antigen content) is a preparation of diphtheria formol toxoid with a mineral adsorbent. The formol toxoid is prepared from the toxin produced by the growth of *Corynebacterium diphtheriae*. It shall have been demonstrated to the competent authority that the quantity of diphtheria toxoid used does not produce adverse reactions in subjects from the age groups for which the vaccine is intended.

PRODUCTION

GENERAL PROVISIONS

Specific toxicity. The production method is validated to demonstrate that the product, if tested, would comply with the following test: inject subcutaneously 5 times the single human dose stated on the label into each of 5 healthy guinea-pigs, each weighing 250-350 g, that have not previously been treated with any material that will interfere with the test. If within 42 days of the injection any of the animals shows signs of or dies from diphtheria toxaemia, the vaccine does not comply with the test. If more than one animal dies from non-specific causes, repeat the test once; if more than one animal dies in the second test, the vaccine does not comply with the test.

BULK PURIFIED TOXOID

The bulk purified toxoid is prepared as described in the monograph on *Diphtheria vaccine (adsorbed) (0443)* and complies with the requirements prescribed therein.

FINAL BULK VACCINE

The final bulk vaccine is prepared by adsorption of a suitable quantity of bulk purified toxoid onto a mineral carrier such as hydrated aluminium phosphate or aluminium hydroxide; the resulting mixture is approximately isotonic with blood. Suitable antimicrobial preservatives may be added. Certain antimicrobial preservatives, particularly those of the phenolic type, adversely affect the antigenic activity and must not be used.

Only a final bulk vaccine that complies with the following requirements may be used in the preparation of the final lot.

Antimicrobial preservative. Where applicable, determine the amount of antimicrobial preservative by a suitable chemical method. The amount is not less than 85 per cent and not greater than 115 per cent of the intended amount.

Sterility (*2.6.1*). Carry out the test for sterility using 10 mL for each medium.

FINAL LOT

The final bulk vaccine is distributed aseptically into sterile, tamper-proof containers. The containers are closed so as to prevent contamination.

Only a final lot that is satisfactory with respect to each of the requirements given below under Identification, Tests and Assay may be released for use. Provided the test for antimicrobial preservative and the assay have been carried out with satisfactory results on the final bulk vaccine, they may be omitted on the final lot.

Provided the free formaldehyde content has been determined on the bulk purified toxoid or on the final bulk and it has been shown that the content in the final lot will not exceed 0.2 g/L, the test for free formaldehyde may be omitted on the final lot.

IDENTIFICATION

Diphtheria toxoid is identified by a suitable immunochemical method (*2.7.1*). The following method, applicable to certain vaccines, is given as an example. Dissolve in the vaccine to be examined sufficient *sodium citrate R* to give a 100 g/L solution. Maintain at 37 °C for about 16 h and centrifuge until a clear supernatant is obtained. The clear supernatant reacts with a suitable diphtheria antitoxin, giving a precipitate. If a satisfactory result is not obtained with a vaccine adsorbed on aluminium hydroxide, carry out the test as follows. Centrifuge 15 mL of the vaccine to be examined and suspend the residue in 5 mL of a freshly prepared mixture of 1 volume of a 56 g/L solution of *sodium edetate R* and 49 volumes of a 90 g/L solution of *disodium hydrogen phosphate R*. Maintain at 37 °C for not less than 6 h and centrifuge. The clear supernatant reacts with a suitable diphtheria antitoxin, giving a precipitate.

TESTS

Aluminium (*2.5.13*): maximum 1.25 mg per single human dose, if aluminium hydroxide or hydrated aluminium phosphate is used as the adsorbent.

Free formaldehyde (*2.4.18*): maximum 0.2 g/L.

Antimicrobial preservative. Where applicable, determine the amount of antimicrobial preservative by a suitable chemical method. The content is not less than the minimum amount shown to be effective and is not greater than 115 per cent of the quantity stated on the label.

Sterility (*2.6.1*). The vaccine complies with the test for sterility.

ASSAY

Carry out one of the prescribed methods for the assay of diphtheria vaccine (adsorbed) (*2.7.6*).

The lower confidence limit ($P = 0.95$) of the estimated potency is not less than 2 IU per single human dose.

LABELLING

The label states:

- the minimum number of International Units per single human dose;
- the name and the amount of the adsorbent;
- that the vaccine must be shaken before use;
- that the vaccine is not to be frozen.

01/2013:1219

HAEMOPHILUS TYPE b CONJUGATE VACCINE

Vaccinum haemophili stirpis b coniugatum

DEFINITION

Haemophilus type b conjugate vaccine is a liquid or freeze-dried preparation of a polysaccharide, derived from a suitable strain of *Haemophilus influenzae* type b, covalently bound to a carrier protein. The polysaccharide, polyribosylribitol phosphate, referred to as PRP, is a linear copolymer composed of repeated units of 3-β-D-ribofuranosyl-(1→1)-ribitol-5-phosphate $[(C_{10}H_{19}O_{12}P)_n]$, with a defined molecular size. The carrier protein, when conjugated to PRP, is capable of inducing a T-cell-dependent B-cell immune response to the polysaccharide.

PRODUCTION

GENERAL PROVISIONS

The production method shall have been shown to yield consistently haemophilus type b conjugate vaccines of adequate safety and immunogenicity in man. The production of PRP and of the carrier protein are based on seed-lot systems.

The production method is validated to demonstrate that the product, if tested, would comply with the test for abnormal toxicity for immunosera and vaccines for human use (*2.6.9*) and also with the test for pyrogens (*2.6.8*), carried out as follows: inject per kilogram of the rabbit's mass a quantity of the vaccine equivalent to: 1 µg of PRP for a vaccine with diphtheria toxoid or CRM 197 diphtheria protein as carrier; 0.1 µg of PRP for a vaccine with tetanus toxoid as carrier; 0.025 µg of PRP for a vaccine with OMP (meningococcal group B outer membrane protein complex) as carrier.

During development studies and wherever revalidation of the manufacturing process is necessary, it shall be demonstrated by tests in animals that the vaccine consistently induces a T-cell-dependent B-cell immune response.

The stability of the final lot and relevant intermediates is evaluated using one or more indicator tests. Such tests may include determination of molecular size, determination of free PRP in the conjugate and the immunogenicity test in mice. Taking account of the results of the stability testing, release requirements are set for these indicator tests to ensure that the vaccine will be satisfactory at the end of the period of validity.

BACTERIAL SEED LOTS

The seed lots of *H. influenzae* type b are shown to be free from contamination by methods of suitable sensitivity. These may include inoculation into suitable media, examination of colony morphology, microscopic examination of Gram-stained smears and culture agglutination with suitable specific antisera.

No complex products of animal origin are included in the medium used for preservation of strain viability, either for freeze-drying or for frozen storage.

It is recommended that PRP produced by the seed lot be characterised using nuclear magnetic resonance spectrometry (*2.2.33*).

H. INFLUENZAE TYPE b POLYSACCHARIDE (PRP)

H. influenzae type b is grown in a liquid medium that does not contain high-molecular-mass polysaccharides; if any ingredient of the medium contains blood-group substances, the process shall be validated to demonstrate that after the purification step they are no longer detectable. The bacterial purity of the culture is verified by methods of suitable sensitivity. These may include inoculation into suitable media, examination of colony morphology, microscopic examination of Gram-stained smears and culture agglutination with suitable specific antisera. The culture may be inactivated. PRP is separated from the culture medium and purified by a suitable method. Volatile matter, including water, in the purified polysaccharide is determined by a suitable method; the result is used to calculate the results of certain tests with reference to the dried substance, as prescribed below.

Only PRP that complies with the following requirements may be used in the preparation of the conjugate.

Identification. PRP is identified by an immunochemical method (*2.7.1*) or other suitable method, for example ^{1}H nuclear magnetic resonance spectrometry (*2.2.33*).

Molecular-size distribution. The percentage of PRP eluted before a given K_0 value or within a range of K_0 values is determined by size-exclusion chromatography (*2.2.30*); an acceptable value is established for the particular product and each batch of PRP must be shown to comply with this limit. Limits for currently approved products, using the indicated stationary phases, are shown for information in Table 1219.-1. Where applicable, the molecular-size distribution is also determined after chemical modification of the polysaccharide.

Liquid chromatography (*2.2.29*) with multiple-angle laser light-scattering detection may also be used for determination of molecular-size distribution.

A validated determination of the degree of polymerisation or of the weight-average molecular weight and the dispersion of molecular masses may be used instead of the determination of molecular size distribution.

Ribose (*2.5.31*): within the limits approved by the competent authority for the particular product, calculated with reference to the dried substance.

Phosphorus (*2.5.18*): within the limits approved by the competent authority for the particular product, calculated with reference to the dried substance.

Protein (*2.5.16*): maximum 1.0 per cent, calculated with reference to the dried substance. Use sufficient PRP to allow detection of proteins at concentrations of 1 per cent or greater.

Nucleic acid (*2.5.17*): maximum 1.0 per cent, calculated with reference to the dried substance.

Bacterial endotoxins (*2.6.14*): less than 10 IU per microgram of PRP.

Residual reagents. Where applicable, tests are carried out to determine residues of reagents used during inactivation and purification. An acceptable value for each reagent is established for the particular product and each batch of PRP must be shown to comply with this limit. Where validation studies have demonstrated removal of a residual reagent, the test on PRP may be omitted.

CARRIER PROTEIN

The carrier protein is chosen so that when the PRP is conjugated it is able to induce a T-cell-dependent B-cell immune response. Currently approved carrier proteins and coupling methods are listed for information in Table 1219.-1. The carrier proteins are produced by culture of suitable micro-organisms; the bacterial purity of the culture is verified; the culture may be inactivated; the carrier protein is purified by a suitable method.

Only a carrier protein that complies with the following requirements may be used in the preparation of the conjugate.

Identification. The carrier protein is identified by a suitable immunochemical method (*2.7.1*).

Table 1219.-1. – *Product characteristics and specifications for PRP and carrier protein in currently approved products*

Carrier			*Haemophilus* polysaccharide		Conjugation	
Type	**Purity**	**Nominal amount per dose**	**Type of PRP**	**Nominal amount per dose**	**Coupling method**	**Procedure**
Diphtheria toxoid	> 1500 Lf per milligram of nitrogen	18 µg	Size-reduced PRP K_0: 0.6-0.7, using *cross-linked agarose for chromatography R*	25 µg	cyanogen bromide activation of PRP	activated diphtheria toxoid (D-AH$^+$), cyanogen bromide-activated PRP
Tetanus toxoid	> 1500 Lf per milligram of nitrogen	20 µg	PRP ≥ 50 % ≤ K_0: 0.30, using *cross-linked agarose for chromatography R*	10 µg	carbodiimide mediated	ADH-activated PRP (PRP-cov.-AH) + tetanus toxoid + EDAC
CRM 197 diphtheria protein	> 90 % of diphtheria protein	25 µg	Size-reduced PRP Dp = 15-35 or 10-35	10 µg	reductive amination (1-step method) or *N*-hydroxysuccinimide activation	direct coupling of PRP to CRM 197 (cyanoborohydride activated)
Meningococcal group B outer membrane protein (OMP)	outer membrane protein vesicles: ≤ 8 % of lipopolysaccharide	125 µg or 250 µg	Size-reduced PRP K_0 < 0.6, using *cross-linked agarose for chromatography R* or M_w > 50 × 10^3	7.5 µg or 15 µg	thioether bond	PRP activation by CDI PRP-IM + BuA2 + BrAc = PRP-BuA2-BrAc + thioactivated OMP

ADH = adipic acid dihydrazide
BrAc = bromoacetyl chloride
BuA2 = butane-1,4-diamide
CDI = carbonyldiimidazole
Dp = degree of polymerisation
EDAC = 1-ethyl-3-(3-dimethylaminopropyl)carbodiimide
IM = imidazolium
M_w = weight-average molecular weight

Vaccines

Diphtheria toxoid. Diphtheria toxoid is produced as described in the monograph *Diphtheria vaccine (adsorbed) (0443)* and complies with the requirements prescribed therein for bulk purified toxoid except that the test for sterility (*2.6.1*) is not required.

Tetanus toxoid. Tetanus toxoid is produced as described in the monograph *Tetanus vaccine (adsorbed) (0452)* and complies with the requirements prescribed therein for bulk purified toxoid, except that the antigenic purity is not less than 1500 Lf per milligram of protein nitrogen and that the test for sterility (*2.6.1*) is not required.

Diphtheria protein CRM 197: minimum 90 per cent, determined by a suitable method. Suitable tests are carried out, for validation or routinely, to demonstrate that the product is non-toxic.

OMP (meningococcal group B outer membrane protein complex). OMP complies with the following requirements for lipopolysaccharide and pyrogens.

Lipopolysaccharide: maximum 8 per cent of lipopolysaccharide, determined by a suitable method.

Pyrogens (*2.6.8*). Inject into each rabbit 0.25 µg of OMP per kilogram of body mass.

BULK CONJUGATE

PRP is chemically modified to enable conjugation; it is usually partly depolymerised either before or during this procedure. Reactive functional groups or spacers may be introduced into the carrier protein or PRP prior to conjugation. As a measure of consistency, the extent of derivatisation is monitored. The conjugate is obtained by the covalent binding of PRP and carrier protein. Where applicable, unreacted but potentially reactogenic functional groups are made unreactive by means of capping agents; the conjugate is purified to remove reagents.

Only a bulk conjugate that complies with the following requirements may be used in the preparation of the final bulk vaccine. For each test and for each particular product, limits of acceptance are established and each batch of conjugate must be shown to comply with these limits. Limits applied to currently approved products for some of these tests are listed for information in Table 1219.-2. For a freeze-dried vaccine, some of the tests may be carried out on the final lot rather than on the bulk conjugate where the freeze-drying process may affect the component being tested.

PRP. The PRP content is determined by assay of phosphorus (*2.5.18*) or by assay of ribose (*2.5.31*) or by an immunochemical method (*2.7.1*).

Protein. The protein content is determined by a suitable chemical method (for example, *2.5.16*).

PRP to protein ratio. Determine the ratio by calculation.

Molecular-size distribution. Molecular-size distribution is determined by size-exclusion chromatography (*2.2.30*).

Free PRP. A number of methods have been used to separate free PRP from the conjugate, including precipitation, gel filtration, size-exclusion, anion-exchange and hydrophobic chromatography, ultrafiltration and ultracentrifugation. The free PRP can then be quantified by a range of techniques, including high-performance anion-exchange chromatography with pulsed amperometric detection (HPAEC-PAD) and immunoassays with anti-PRP antibodies.

Free carrier protein. Determine the content by a suitable method, either directly or by deriving the content by calculation from the results of other tests. The amount is within the limits approved for the particular product.

Unreacted functional groups. No unreacted functional groups are detectable in the bulk conjugate unless process validation has shown that unreacted functional groups detectable at this stage are removed during the subsequent manufacturing process (for example, owing to short half-life).

Residual reagents. Removal of residual reagents such as cyanide, EDAC (ethyldimethylaminopropylcarbodiimide) and phenol is confirmed by suitable tests or by validation of the process.

Sterility (*2.6.1*). Carry out the test using for each medium 10 mL or the equivalent of 100 doses, whichever is less.

FINAL BULK VACCINE

An adjuvant, an antimicrobial preservative and a stabiliser may be added to the bulk conjugate before dilution to the final concentration with a suitable diluent.

Only a final bulk vaccine that complies with the following requirements may be used in preparation of the final lot.

Antimicrobial preservative. Where applicable, determine the amount of antimicrobial preservative by a suitable chemical or physico-chemical method. The content is not less than 85 per cent and not greater than 115 per cent of the intended amount.

Sterility (*2.6.1*). It complies with the test for sterility, carried out using 10 mL for each medium.

FINAL LOT

Only a final lot that is satisfactory with respect to each of the following requirements and the requirements given below under Identification and Tests may be released for use. Provided the test for antimicrobial preservative has been carried out on the final bulk vaccine, it may be omitted on the final lot.

pH (*2.2.3*). The pH of the vaccine, reconstituted if necessary, is within the range approved for the particular product.

Free PRP. A number of methods have been used to separate free PRP from the conjugate, including precipitation, gel filtration, size-exclusion, anion-exchange and hydrophobic chromatography, ultrafiltration and ultracentrifugation. The free PRP can then be quantified by a range of techniques, including HPAEC-PAD and immunoassays with anti-PRP antibodies. The amount of free PRP is not greater than that approved for the particular product.

IDENTIFICATION

The vaccine is identified by a suitable immunochemical method (*2.7.1*) for PRP.

Table 1219.-2. – *Bulk conjugate requirements for currently approved products*

Test	Protein carrier			
	Diphtheria toxoid	Tetanus toxoid	CRM 197	OMP
Free PRP	< 37 %	< 20 %	< 25 %	< 15 %
Free protein	< 4 %	< 1 %, where applicable	< 1 % or < 2 %, depending on the coupling method	not applicable
PRP to protein ratio	1.25 - 1.8	0.30 - 0.55	0.3 - 0.7	0.05 - 0.1
Molecular size (K_o):				
cross-linked agarose for chromatography R	95 % < 0.75	60 % < 0.2	50 % 0.3 - 0.6	85 % < 0.3
cross-linked agarose for chromatography R1	0.6 - 0.7	85 % < 0.5		

TESTS

PRP: minimum 80 per cent of the amount of PRP stated on the label. PRP is determined either by assay of ribose (*2.5.31*) or phosphorus (*2.5.18*), by an immunochemical method (*2.7.1*) or by anion-exchange liquid chromatography with pulsed amperometric detection (*2.2.29*).

Aluminium (*2.5.13*): maximum 1.25 mg per single human dose, if aluminium hydroxide or hydrated aluminium phosphate is used as the adsorbent.

Antimicrobial preservative. Where applicable, determine the amount of antimicrobial preservative by a suitable chemical or physico-chemical method. The content is not less than the minimum amount shown to be effective and not greater than 115 per cent of the quantity stated on the label.

Water (*2.5.12*): maximum 3.0 per cent for freeze-dried vaccines.

Sterility (*2.6.1*). It complies with the test for sterility.

Bacterial endotoxins (*2.6.14*). The content is within the limits approved by the competent authority for the particular product. If any components of the vaccine prevent the determination of endotoxin, a test for pyrogens is carried out as described under General provisions.

LABELLING

The label states:

- the number of micrograms of PRP per human dose;
- the type and nominal amount of carrier protein per single human dose.

01/2012:2597

HEPATITIS A (INACTIVATED, ADSORBED) AND TYPHOID POLYSACCHARIDE VACCINE

Vaccinum hepatitidis A inactivatum adsorbatum et febris typhoidis polysaccharidicum

DEFINITION

Hepatitis A (inactivated, adsorbed) and typhoid polysaccharide vaccine is a suspension consisting of a suitable strain of hepatitis A virus, grown in cell cultures and inactivated by a validated method, and of purified Vi capsular polysaccharide obtained from *Salmonella typhi* Ty 2 strain or some other suitable strain that has the capacity to produce Vi polysaccharide.

The hepatitis A antigen is adsorbed on a mineral carrier, such as aluminium hydroxide, and the Vi capsular polysaccharide consists of partly 3-*O*-acetylated repeated units of 2-acetylamino-2-deoxy-D-galactopyranuronic acid with α-(1→4) linkages.

The product is presented either as a liquid mixture containing the hepatitis A component and the typhoid Vi polysaccharide component or as 2 separate liquids, one containing the hepatitis A component and the other the typhoid Vi polysaccharide component, which are mixed together immediately before use.

PRODUCTION

GENERAL PROVISIONS

The 2 components are prepared as described in the monographs *Hepatitis A vaccine (inactivated, adsorbed) (1107)* and *Typhoid polysaccharide vaccine (1160)* and comply with the requirements prescribed therein.

The production method is validated to demonstrate that the product, if tested, would comply with the test for abnormal toxicity for immunosera and vaccines for human use (*2.6.9*).

Reference preparation. The hepatitis A reference preparation is part of a representative batch shown to be at least as immunogenic in animals as a batch that, in clinical studies in young healthy adults, produced not less than 95 per cent seroconversion, corresponding to a level of neutralising antibody accepted to be protective, after a full-course primary immunisation. An antibody level not less than 20 mIU/mL determined by enzyme-linked immunosorbent assay is recognised as being protective.

FINAL BULKS

The hepatitis A final bulk is prepared from 1 or more inactivated harvests of hepatitis A virus. Approved adjuvants, stabilisers and antimicrobial preservatives may be added.

The Vi polysaccharide final bulk is prepared from 1 or more batches of purified Vi polysaccharide which are dissolved in a suitable solvent, which may contain an antimicrobial preservative, so that the volume corresponding to 1 dose contains 25 µg of polysaccharide and the solution is isotonic with blood (250-350 mosmol/kg).

Where the vaccine is presented as a liquid mixture of both components, the final bulk is prepared by addition of a suitable quantity of the Vi capsular polysaccharide bulk to the hepatitis A bulk.

Only final bulks that comply with the following requirements may be used in the preparation of the final lot.

Antimicrobial preservative. Where applicable, determine the amount of antimicrobial preservative by a suitable chemical or physico-chemical method. The amount is not less than 85 per cent and not greater than 115 per cent of the intended amount.

Sterility (*2.6.1*). Carry out the test for sterility using 10 mL for each medium.

FINAL LOT

The final bulks are distributed aseptically into sterile containers. The containers are then closed so as to avoid contamination.

Only a final lot that complies with each of the requirements given below under Identification, Tests and Assay may be released for use. Provided that the tests for free formaldehyde (where applicable), antimicrobial preservative (where applicable) and bacterial endotoxins have been carried out on the final bulks with satisfactory results, they may be omitted on the final lot. If the assay of the hepatitis A component is carried out *in vivo*, then provided it has been carried out with satisfactory results on the final bulk containing the hepatitis A component, it may be omitted on the final lot.

CHARACTERS

If the vaccine is presented as 2 separate liquids test A is carried out using the hepatitis A component and test B is carried out using the typhoid Vi polysaccharide component. Test C is carried out if the vaccine is presented as a liquid mixture of both components or immediately after mixing both components if the vaccine is presented as 2 separate liquids.

A. Whitish, cloudy suspension.

B. Clear, colourless liquid, free from visible particles.

C. Turbid liquid with a slow settling white deposit.

IDENTIFICATION

If the vaccine is presented as 2 separate liquids, identification test A is carried out using the hepatitis A component and identification test B is carried out using the typhoid Vi polysaccharide component. If the vaccine is presented as a liquid mixture, tests A and B are carried out.

A. Hepatitis A virus antigen is identified by a suitable immunochemical method (*2.7.1*) using specific antibodies or by the *in vivo* assay (*2.7.14*).

B. Typhoid Vi polysaccharide is identified by a suitable immunochemical method (*2.7.1*) using specific antibodies.

Vaccines

TESTS

If the vaccine is presented as 2 separate liquids, the tests for pH, antimicrobial preservative and bacterial endotoxins are carried out on both components; the test for aluminium is carried out using the hepatitis A component and the test for O-acetyl groups is carried out using the typhoid Vi polysaccharide component; the tests for pH, free formaldehyde, osmolality and sterility are carried out immediately after mixing both components. If the vaccine is presented as a liquid mixture, the test for O-acetyl groups is carried out before the 2 components are mixed.

pH (*2.2.3*): 6.8 to 7.8 for the hepatitis A component and 6.5 to 7.5 for the typhoid Vi polysaccharide component; 6.6 to 7.6 for the vaccine presented as a liquid mixture or immediately after mixing both components if the vaccine is presented as 2 separate liquids.

Aluminium (*2.5.13*): maximum 1.25 mg per single human dose, if aluminium hydroxide is used as the adsorbent.

Free formaldehyde (*2.4.18*): maximum 0.2 g/L.

Antimicrobial preservative. Where applicable, determine the amount of antimicrobial preservative by a suitable chemical or physico-chemical method. The amount is not less than the minimum amount shown to be effective and is not greater than 115 per cent of the amount stated on the label.

Sterility (*2.6.1*). The vaccine complies with the test for sterility.

Osmolality (*2.2.35*). Where applicable, the osmolality of the vaccine is within the limits approved for the particular product.

Bacterial endotoxins (*2.6.14*). The bacterial endotoxins content is less than 2 IU per human dose for the hepatitis A component and within the limit approved for the typhoid Vi polysaccharide component. If the vaccine is presented as a liquid mixture of hepatitis A component and typhoid Vi polysaccharide component the bacterial endotoxins content is within the limit approved for the specific product.

***O*-Acetyl groups** (*2.5.19*): 0.085 µmol (± 25 per cent) per dose (25 µg of polysaccharide).

ASSAY

Hepatitis A component. The vaccine complies with the assay of hepatitis A vaccine (*2.7.14*).

Typhoid Vi polysaccharide component. Determine Vi polysaccharide by a suitable immunochemical method (*2.7.1*), using a reference purified polysaccharide. The estimated amount of polysaccharide per dose is 80 per cent to 120 per cent of the content stated on the label. The confidence limits ($P = 0.95$) of the estimated amount of polysaccharide are not less than 80 per cent and not more than 120 per cent.

LABELLING

The label states:

- the amount of hepatitis A virus antigen per human dose;
- the number of micrograms of polysaccharide per human dose (25 µg);
- the total quantity of polysaccharide in the container;
- the type of cells used for production of the vaccine;
- the name and amount of the adsorbent used;
- that the vaccine must be shaken before use;
- that the vaccine must not be frozen.

01/2008:1526

HEPATITIS A (INACTIVATED) AND HEPATITIS B (rDNA) VACCINE (ADSORBED)

Vaccinum hepatitidis A inactivatum et hepatitidis B (ADNr) adsorbatum

DEFINITION

Hepatitis A (inactivated) and hepatitis B (rDNA) vaccine (adsorbed) is a suspension consisting of a suitable strain of hepatitis A virus, grown in cell cultures and inactivated by a validated method, and of hepatitis B surface antigen (HBsAg), a component protein of hepatitis B virus obtained by recombinant DNA technology; the antigens are adsorbed on a mineral carrier, such as aluminium hydroxide or hydrated aluminium phosphate.

PRODUCTION

GENERAL PROVISIONS

The two components are prepared as described in the monographs on *Hepatitis A vaccine (inactivated, adsorbed) (1107)* and *Hepatitis B vaccine (rDNA) (1056)* and comply with the requirements prescribed therein.

The production method is validated to demonstrate that the product, if tested, would comply with the test for abnormal toxicity for immunosera and vaccines for human use (*2.6.9*).

Reference preparation. The reference preparation is part of a representative batch shown to be at least as immunogenic in animals as a batch that, in clinical studies in young healthy adults, produced not less than 95 per cent seroconversion, corresponding to a level of neutralising antibody recognised to be protective, after a full-course primary immunisation. For hepatitis A, an antibody level not less than 20 mIU/mL determined by enzyme-linked immunosorbent assay is recognised as being protective. For hepatitis B, an antibody level not less than 10 mIU/mL against HBsAg is recognised as being protective.

FINAL BULK VACCINE

The final bulk vaccine is prepared from one or more inactivated harvests of hepatitis A virus and one or more batches of purified antigen.

Only a final bulk vaccine that complies with the following requirements may be used in the preparation of the final lot.

Antimicrobial preservative. Where applicable, determine the amount of antimicrobial preservative by a suitable chemical or physico-chemical method. The amount is not less than 85 per cent and not greater than 115 per cent of the intended amount.

Sterility (*2.6.1*). The final bulk vaccine complies with the test for sterility, carried out using 10 mL for each medium.

FINAL LOT

Only a final lot that complies with each of the requirements given below under Identification, Tests and Assay may be released for use. Provided that the tests for free formaldehyde (where applicable) and antimicrobial preservative content (where applicable) have been carried out on the final bulk vaccine with satisfactory results, they may be omitted on the final lot. If the assay of the hepatitis A and/or the hepatitis B component is carried out *in vivo*, then provided it has been carried out with satisfactory results on the final bulk vaccine, it may be omitted on the final lot.

IDENTIFICATION

The vaccine is shown to contain hepatitis A virus antigen and hepatitis B surface antigen by suitable immunochemical methods (*2.7.1*), using specific antibodies or by the mouse immunogenicity tests described under Assay.

Vaccines

TESTS

Aluminium (*2.5.13*): maximum 1.25 mg per single human dose, if aluminium hydroxide or hydrated aluminium phosphate is used as the adsorbent.

Free formaldehyde (*2.4.18*): maximum 0.2 g/L.

Antimicrobial preservative. Where applicable, determine the amount of antimicrobial preservative by a suitable chemical or physico-chemical method. The amount is not less than the minimum amount shown to be effective and is not greater than 115 per cent of that stated on the label.

Sterility (*2.6.1*). The vaccine complies with the test for sterility.

Bacterial endotoxins (*2.6.14*): less than 2 IU per human dose.

ASSAY

Hepatitis A component. The vaccine complies with the assay of hepatitis A vaccine (*2.7.14*).

Hepatitis B component. The vaccine complies with the assay of hepatitis B vaccine (rDNA) (*2.7.15*).

LABELLING

The label states:

- the amount of hepatitis A virus antigen and hepatitis B surface antigen per container,
- the type of cells used for production of the vaccine,
- the name and amount of the adsorbent used,
- that the vaccine must be shaken before use,
- that the vaccine must not be frozen.

01/2010:1107

HEPATITIS A VACCINE (INACTIVATED, ADSORBED)

Vaccinum hepatitidis A inactivatum adsorbatum

DEFINITION

Hepatitis A vaccine (inactivated, adsorbed) is a suspension consisting of a suitable strain of hepatitis A virus grown in cell cultures, inactivated by a validated method and adsorbed on a mineral carrier.

PRODUCTION

GENERAL PROVISIONS

Production of the vaccine is based on a virus seed-lot system and a cell-bank system. The production method shall have been shown to consistently yield vaccines that comply with the requirements for immunogenicity, safety and stability.

The production method is validated to demonstrate that the product, if tested, would comply with the test for abnormal toxicity for immunosera and vaccines for human use (*2.6.9*).

Unless otherwise justified and authorised, the virus in the final vaccine shall not have undergone more passages from the master seed lot than were used to prepare the vaccine shown in clinical studies to be satisfactory with respect to safety and efficacy.

Reference preparation. A part of a batch shown to be at least as immunogenic in animals as a batch that, in clinical studies in young healthy adults, produced not less than 95 per cent seroconversion, corresponding to a level of neutralising antibody accepted to be protective, after a full-course primary immunisation is used as a reference preparation. An antibody level of 20 mIU/mL determined by enzyme-linked immunosorbent assay is recognised as being protective.

SUBSTRATE FOR VIRUS PROPAGATION

The virus is propagated in a human diploid cell line (*5.2.3*) or in a continuous cell line approved by the competent authority.

SEED LOTS

The strain of hepatitis A virus used to prepare the master seed lot shall be identified by historical records that include information on the origin of the strain and its subsequent manipulation.

Only a seed lot that complies with the following requirements may be used for virus propagation.

Identification. Each master and working seed lot is identified as hepatitis A virus using specific antibodies.

Virus concentration. The virus concentration of each master and working seed lot is determined to monitor consistency of production.

Extraneous agents. The working seed lot complies with the requirements for seed lots for virus vaccines (*2.6.16*). In addition, if primary monkey cells have been used for isolation of the strain, measures are taken to ensure that the strain is not contaminated with simian viruses such as simian immunodeficiency virus and filoviruses.

VIRUS PROPAGATION AND HARVEST

All processing of the cell bank and subsequent cell cultures is done under aseptic conditions in an area where no other cells are being handled. Animal serum (but not human serum) may be used in the cell culture media. Serum and trypsin used in the preparation of cell suspensions and media are shown to be free from extraneous agents. The cell culture media may contain a pH indicator, such as phenol red, and antibiotics at the lowest effective concentration. Not less than 500 mL of the cell cultures employed for vaccine production is set aside as uninfected cell cultures (control cells). Multiple harvests from the same production cell culture may be pooled and considered as a single harvest.

Only a single harvest that complies with the following requirements may be used in the preparation of the vaccine. When the determination of the ratio of virus concentration to antigen content has been carried out on a suitable number of single harvests to demonstrate production consistency, it may subsequently be omitted as a routine test.

Identification. The test for antigen content also serves to identify the single harvest.

Bacterial and fungal contamination. The single harvest complies with the test for sterility (*2.6.1*), carried out using 10 mL for each medium.

Mycoplasmas (*2.6.7*). The single harvest complies with the test for mycoplasmas, carried out using 1 mL for each medium.

Control cells. The control cells of the production cell culture comply with a test for identification and the requirements for extraneous agents (*2.6.16*).

Antigen content. Determine the hepatitis A antigen content by a suitable immunochemical method (*2.7.1*) to monitor production consistency; the content is within the limits approved for the particular product.

Ratio of virus concentration to antigen content. The consistency of the ratio of the concentration of infectious virus, determined by a suitable cell culture method, to antigen content is established by validation on a suitable number of single harvests.

PURIFICATION AND PURIFIED HARVEST

The harvest, which may be a pool of several single harvests, is purified by validated methods. If continuous cell lines are used for production, the purification process shall have been shown to reduce consistently the level of host-cell DNA.

Only a purified harvest that complies with the following requirements may be used in the preparation of the inactivated harvest.

Virus concentration. The concentration of infectious virus in the purified harvest is determined by a suitable cell culture method to monitor production consistency and as a starting point for monitoring the inactivation curve.

Antigen:total protein ratio. Determine the hepatitis A virus antigen content by a suitable immunochemical method (*2.7.1*). Determine the total protein by a validated method. The ratio of hepatitis A virus antigen content to total protein content is within the limits approved for the particular product.

Bovine serum albumin. Not more than 50 ng in the equivalent of a single human dose, determined by a suitable immunochemical method (*2.7.1*). Where appropriate in view of the manufacturing process, other suitable protein markers may be used to demonstrate effective purification.

Residual host-cell DNA. If a continuous cell line is used for virus propagation, the content of residual host-cell DNA, determined using a suitable method, is not greater than 100 pg in the equivalent of a single human dose.

Residual chemicals. If chemical substances are used during the purification process, tests for these substances are carried out on the purified harvest (or on the inactivated harvest), unless validation of the process has demonstrated total clearance. The concentration must not exceed the limits approved for the particular product.

INACTIVATION AND INACTIVATED HARVEST

Several purified harvests may be pooled before inactivation. In order to avoid interference with the inactivation process, virus aggregation must be prevented or aggregates must be removed immediately before and/or during the inactivation process. The virus suspension is inactivated by a validated method; the method shall have been shown to be consistently capable of inactivating hepatitis A virus without destroying the antigenic and immunogenic activity; for each inactivation procedure, an inactivation curve is plotted representing residual live virus concentration measured at not fewer than 3 points in time (for example, on days 0, 1 and 2 of the inactivation process). If formaldehyde is used for inactivation, the presence of excess free formaldehyde is verified at the end of the inactivation process.

Only an inactivated harvest that complies with the following requirements may be used in the preparation of the final bulk vaccine.

Inactivation. Carry out an amplification test for residual infectious hepatitis A virus by inoculating a quantity of the inactivated harvest equivalent to 5 per cent of the batch or, if the harvest contains the equivalent of 30 000 doses or more, not less than 1500 doses of vaccine into cell cultures of the same type as those used for production of the vaccine; incubate for a total of not less than 70 days making not fewer than one passage of cells within that period. At the end of the incubation period, carry out a test of suitable sensitivity for residual infectious virus. No evidence of hepatitis A virus multiplication is found in the samples taken at the end of the inactivation process. Use infectious virus inocula concurrently as positive controls to demonstrate cellular susceptibility and absence of interference.

Sterility (*2.6.1*). The inactivated viral harvest complies with the test for sterility, carried out using 10 mL for each medium.

Bacterial endotoxins (*2.6.14*): less than 2 IU in the equivalent of a single human dose.

Antigen content. Determine the hepatitis A virus antigen content by a suitable immunochemical method (*2.7.1*).

Residual chemicals. See under Purification and purified harvest.

FINAL BULK VACCINE

The final bulk vaccine is prepared from one or more inactivated harvests. Approved adjuvants, stabilisers and antimicrobial preservatives may be added.

Only a final bulk vaccine that complies with the following requirements may be used in the preparation of the final lot.

Sterility (*2.6.1*). The final bulk vaccine complies with the test for sterility, carried out using 10 mL for each medium.

Antimicrobial preservative. Where applicable, determine the amount of antimicrobial preservative by a suitable chemical or physico-chemical method. The amount is not less than 85 per cent and not greater than 115 per cent of the intended amount.

FINAL LOT

The final bulk vaccine is distributed aseptically into sterile containers. The containers are then closed so as to avoid contamination.

Only a final lot that complies with each of the requirements given below under Identification, Tests and Assay may be released for use. Provided that the tests for free formaldehyde (where applicable) and antimicrobial preservative content (where applicable) have been carried out on the final bulk vaccine with satisfactory results, these tests may be omitted on the final lot. If the assay is carried out using mice or other animals, then provided it has been carried out with satisfactory results on the final bulk vaccine, it may be omitted on the final lot.

IDENTIFICATION

The vaccine is shown to contain hepatitis A virus antigen by a suitable immunochemical method (*2.7.1*) using specific antibodies or by the *in vivo* assay (*2.7.14*).

TESTS

Aluminium (*2.5.13*): maximum 1.25 mg per single human dose, if aluminium hydroxide or hydrated aluminium phosphate is used as the adsorbent.

Free formaldehyde (*2.4.18*): maximum 0.2 g/L.

Antimicrobial preservative. Where applicable, determine the amount of antimicrobial preservative by a suitable chemical or physico-chemical method. The amount is not less than the minimum amount shown to be effective and is not greater than 115 per cent of that stated on the label.

Sterility (*2.6.1*). The vaccine complies with the test for sterility.

ASSAY

The vaccine complies with the assay of hepatitis A vaccine (*2.7.14*).

LABELLING

The label states the biological origin of the cells used for the preparation of the vaccine.

01/2010:1935

HEPATITIS A VACCINE (INACTIVATED, VIROSOME)

Vaccinum hepatitidis A inactivatum virosomale

DEFINITION

Hepatitis A vaccine (inactivated, virosome) is a suspension of a suitable strain of hepatitis A virus grown in cell cultures and inactivated by a validated method. Virosomes composed of influenza proteins of a strain approved for the particular product and phospholipids are used as adjuvants.

PRODUCTION

GENERAL PROVISIONS

The production method shall have been shown to yield consistently vaccines comparable with the vaccine of proven clinical efficacy and safety in man.

The production method is validated to demonstrate that the product, if tested, would comply with the test for abnormal toxicity for immunosera and vaccines for human use (*2.6.9*).

Reference preparation. A reference preparation of inactivated hepatitis A antigen is calibrated against a batch of hepatitis A vaccine (inactivated, virosome) that, in clinical studies in

young healthy adults, produced not less than 95 per cent seroconversion, corresponding to a level of neutralising antibody accepted to be protective, after a full-course primary immunisation. An antibody level not less than 20 mIU/mL determined by enzyme-linked immunosorbent assay is recognised as being protective.

PREPARATION OF HEPATITIS A ANTIGEN

Production of the hepatitis A antigen is based on a virus seed-lot system and a cell-bank system. The production method shall have been shown to consistently yield vaccines that comply with the requirements for immunogenicity, safety and stability.

Unless otherwise justified and authorised, the virus in the final vaccine shall not have undergone more passages from the master seed lot than were used to prepare the vaccine shown in clinical studies to be satisfactory with respect to safety and efficacy.

SUBSTRATE FOR PROPAGATION OF HEPATITIS A VIRUS

The virus is propagated in a human diploid cell line (*5.2.3*).

SEED LOTS OF HEPATITIS A VIRUS

The strain of hepatitis A virus used to prepare the master seed lot shall be identified by historical records that include information on the origin of the strain and its subsequent manipulation.

Only a seed lot that complies with the following requirements may be used for virus propagation.

Identification. Each master and working seed lot is identified as hepatitis A virus using specific antibodies.

Virus concentration. The virus concentration of each master and working seed lot is determined to monitor consistency of production.

Extraneous agents. The working seed lot complies with the requirements for seed lots for virus vaccines (*2.6.16*).

PROPAGATION AND HARVEST OF HEPATITIS A VIRUS

All processing of the cell bank and subsequent cell cultures is done under aseptic conditions in an area where no other cells are handled. Animal serum (but not human serum) may be used in the cell culture media. Serum and trypsin used in the preparation of cell suspensions and media are shown to be free from extraneous agents. The cell culture media may contain a pH indicator such as phenol red and antibiotics at the lowest effective concentration. Not less than 500 mL of the cell cultures employed for vaccine production is set aside as uninfected cell cultures (control cells). Multiple harvests from the same production cell culture may be pooled and considered as a single harvest.

Only a single harvest that complies with the following requirements may be used in the preparation of the vaccine. When the determination of the ratio of virus concentration to antigen content has been carried out on a suitable number of single harvests to demonstrate consistency, it may subsequently be omitted as a routine test.

Identification. The test for antigen content also serves to identify the single harvest.

Bacterial and fungal contamination. The single harvest complies with the test for sterility (*2.6.1*), carried out using 10 mL for each medium.

Mycoplasmas (*2.6.7*). The single harvest complies with the test for mycoplasmas.

Control cells. The control cells of the production cell culture comply with a test for identity and the requirements for extraneous agents (*2.6.16*).

Antigen content. Determine the hepatitis A antigen content by a suitable immunochemical method (*2.7.1*) to monitor production consistency; the content is within the limits approved for the particular product.

Ratio of virus concentration to antigen content. The consistency of the ratio of the concentration of infectious virus, as determined by a suitable cell culture method, to antigen content is established by validation on a suitable number of single harvests.

PURIFICATION AND PURIFIED HARVEST OF HEPATITIS A VIRUS

The harvest, which may be a pool of several single harvests, is purified by validated methods. If continuous cell lines are used for production, the purification process shall have been shown to reduce consistently the level of host-cell DNA.

Only a purified harvest that complies with the following requirements may be used in the preparation of the inactivated harvest.

Virus concentration. The concentration of infective virus in the purified harvest is determined by a suitable cell culture method to monitor production consistency and as a starting point for monitoring the inactivation curve.

Ratio of antigen to total protein. Determine the hepatitis A virus antigen content by a suitable immunochemical method (*2.7.1*). Determine the total protein by a validated method. The ratio of hepatitis A virus antigen content to total protein content is within the limits approved for the particular product.

Bovine serum albumin: maximum 50 ng per single human dose if foetal bovine serum is used, determined by a suitable immunochemical method (*2.7.1*). Where appropriate in view of the manufacturing process, other suitable protein markers may be used to demonstrate effective purification.

Residual chemicals. If chemical substances are used during the purification process, tests for these substances are carried out on the purified harvest (or on the inactivated harvest), unless validation of the process has demonstrated total clearance. The concentration must not exceed the limits approved for the particular product.

INACTIVATION AND INACTIVATED HARVEST OF HEPATITIS A VIRUS

Several purified harvests may be pooled before inactivation. In order to avoid interference with the inactivation process, virus aggregation must be prevented or aggregates must be removed immediately before and/or during the inactivation process. The virus suspension is inactivated by a validated method; the method shall have been shown to be consistently capable of inactivating hepatitis A virus without destroying the antigenic and immunogenic activity; for each inactivation procedure, an inactivation curve is plotted representing residual live virus concentration measured on at least 3 occasions (for example, on days 0, 1 and 2 of the inactivation process). If formaldehyde is used for inactivation, the presence of excess free formaldehyde is verified at the end of the inactivation process.

Only an inactivated harvest that complies with the following requirements may be used in the preparation of the final bulk vaccine.

Inactivation. Carry out an amplification test for residual infectious hepatitis A virus by inoculating a quantity of the inactivated harvest equivalent to 5 per cent of the batch or, if the harvest contains the equivalent of 30 000 doses or more, not less than 1500 doses of vaccine into cell cultures of the same type as those used for production of the vaccine; incubate for a total of not less than 70 days making not fewer than 1 passage of cells within that period. At the end of the incubation period, carry out a test of suitable sensitivity for residual infectious virus. No evidence of hepatitis A virus multiplication is found in the samples taken at the end of the inactivation process. Use infective virus inocula concurrently as positive controls to demonstrate cellular susceptibility and absence of interference.

Sterility (*2.6.1*). The inactivated viral harvest complies with the test for sterility, carried out using 10 mL for each medium.

Bacterial endotoxins (*2.6.14*): less than 2 IU of endotoxin in the equivalent of a single human dose.

Antigen content. Determine the hepatitis A virus antigen content by a suitable immunochemical method (*2.7.1*).

Residual chemicals. See under Purification and purified harvest.

PREPARATION OF INACTIVATED INFLUENZA VIRUS

The production of influenza viruses is based on a seed-lot system. Working seed lots represent not more than 15 passages from the approved reassorted virus or the approved virus isolate. The final production represents 1 passage from the working seed lot. The strain of influenza virus to be used is approved by the competent authority.

SUBSTRATE FOR PROPAGATION OF INFLUENZA VIRUS

Influenza virus seed to be used in the production of vaccine is propagated in fertilised eggs from chicken flocks free from specified pathogens (*5.2.2*) or in suitable cell cultures (*5.2.4*), such as chick-embryo fibroblasts or chick kidney cells obtained from chicken flocks free from specified pathogens (*5.2.2*). For production, the virus is grown in the allantoic cavity of fertilised hens' eggs from healthy flocks.

SEED LOTS OF INFLUENZA VIRUS

The haemagglutinin and neuraminidase antigens of each seed lot are identified as originating from the correct strain of influenza virus by suitable methods.

Only a working virus seed lot that complies with the following requirements may be used in the preparation of the monovalent pooled harvest.

Bacterial and fungal contamination. Carry out the test for sterility (*2.6.1*), using 10 mL for each medium.

Mycoplasmas (*2.6.7*). Carry out the test for mycoplasmas, using 10 mL.

PROPAGATION AND HARVEST OF INFLUENZA VIRUS

An antimicrobial agent may be added to the inoculum. After incubation at a controlled temperature, the allantoic fluids are harvested and combined to form the monovalent pooled harvest. An antimicrobial agent may be added at the time of harvest. At no stage in the production is penicillin or streptomycin used.

POOLED HARVEST OF INFLUENZA VIRUS

To limit the possibility of contamination, inactivation is initiated as soon as possible after preparation. The virus is inactivated by a method that has been demonstrated on 3 consecutive batches to be consistently effective for the manufacturer. The inactivation process shall have been shown to be capable of inactivating the influenza virus without destroying antigenicity of haemagglutinin. The inactivation process shall also have been shown to be capable of inactivating avian leucosis viruses and mycoplasmas. If the monovalent pooled harvest is stored after inactivation, it is held at a temperature of 5 ± 3 °C. If formaldehyde solution is used, the concentration does not exceed 0.2 g/L of CH_2O at any time during inactivation; if betapropiolactone is used, the concentration does not exceed 0.1 per cent *V/V* at any time during inactivation.

Only a pooled harvest that complies with the following requirements may be used in the preparation of the virosomes.

Haemagglutinin antigen. Determine the content of haemagglutinin antigen by an immunodiffusion test (*2.7.1*), by comparison with a haemagglutinin antigen reference preparation or with an antigen preparation calibrated against it. Carry out the test at 20-25 °C.

Sterility (*2.6.1*). Carry out the test for sterility, using 10 mL for each medium.

Viral inactivation. Inoculate 0.2 mL of the harvest into the allantoic cavity of each of 10 fertilised eggs and incubate at 33-37 °C for 3 days. The test is not valid unless at least 8 of the 10 embryos survive. Harvest 0.5 mL of the allantoic fluid from each surviving embryo and pool the fluids. Inoculate 0.2 mL of the pooled fluid into a further 10 fertilised eggs and incubate at 33-37 °C for 3 days. The test is not valid unless at least 8 of the 10 embryos survive. Harvest about 0.1 mL of the allantoic fluid from each surviving embryo and examine each individual harvest by a haemagglutination test. If haemagglutination is found for any of the fluids, carry out for that fluid a further passage in eggs and test for haemagglutination; no haemagglutination occurs.

Ovalbumin: maximum 1 µg of ovalbumin in the equivalent of 1 human dose, determined by a suitable technique using a suitable reference preparation of ovalbumin.

Antimicrobial preservative. Where applicable, determine the amount of antimicrobial preservative by a suitable chemical method. The content is not less than 85 per cent and not greater than 115 per cent of the intended amount.

Residual chemicals. Tests are carried out on the monovalent pooled harvest for the chemicals used for inactivation, the limits being approved by the competent authority.

PREPARATION OF VIROSOMES

Inactivated influenza virions are solubilised using a suitable detergent and are purified by high-speed centrifugation in order to obtain supernatants containing mainly influenza antigens. After the addition of suitable phospholipids, virosomes are formed by removal of the detergent either by adsorption chromatography or another suitable technique

Only virosomes that comply with the following requirements may be used in the preparation of the final bulk vaccine.

Haemagglutinin content. Determine the content of haemagglutinin antigen by an immunodiffusion test (*2.7.1*), by comparison with a haemagglutinin antigen reference preparation or with an antigen preparation calibrated against it.

Phospholipids. The content and identity of the phospholipids are determined by suitable immunochemical or physico-chemical methods.

Ratio of phospholipid to haemagglutinin. The ratio of phospholipid content to haemagglutinin content is within the limits approved for the particular product.

Residual chemicals. Tests are carried out for the chemicals used during the process. The concentration of each residual chemical is within the limits approved for the particular product.

FINAL BULK VACCINE

The bulk vaccine is prepared by adding virosomes to inactivated hepatitis A viruses to yield an approved hepatitis A antigen:haemagglutinin ratio. Several bulks may be pooled, and approved stabilisers and antimicrobial preservatives may be added.

Only a final bulk vaccine that complies with the following requirements may be used in the preparation of the final lot.

Protein content. The amount of protein is determined using a suitable technique, the limits being approved by the competent authorithy.

Phospholipids. The content and identity of the phospholipids are determined by suitable immunochemical or physico-chemical methods. The amount of phospholipids complies with the limits approved for the particular product.

Haemagglutinin content. Determine the content of haemagglutinin antigen by an immunodiffusion test (*2.7.1*). The amount of haemagglutinin must not exceed the limits approved for the particular product.

Hepatitis A antigen content. Determine the hepatitis A antigen content by a suitable immunochemical method. The amount of antigen must not exceed the limits approved for the particular product.

Ratio of hepatitis A antigen to haemagglutinin. The ratio of hepatitis A antigen content to haemagglutinin content is within the limits approved for the particular product.

Ovalbumin: maximum 1 µg of ovalbumin per human dose, determined by a suitable technique using a suitable reference preparation of ovalbumin.

Virosome size. The size distribution of the virosome-hepatitis A virus mixture is within the limits approved for the particular product.

Sterility (*2.6.1*). The final bulk vaccine complies with the test for sterility, carried out using 10 mL for each medium.

Antimicrobial preservative. Where applicable, determine the amount of antimicrobial preservative by a suitable chemical or physico-chemical method. The amount is not less than 85 per cent and not greater than 115 per cent of the intended amount.

Residual chemicals. If chemical substances are used during the formulation process, tests for these substances are carried out, the limits being approved by the competent authorithy.

FINAL LOT

The final bulk vaccine is distributed aseptically into sterile containers. The containers are then closed so as to avoid contamination.

Only a final lot that complies with each of the requirements given below under Identification, Tests and Assay may be released for use. Provided that the tests for free formaldehyde (where applicable) and antimicrobial preservative content (where applicable) have been carried out on the final bulk vaccine with satisfactory results, these tests may be omitted on the final lot. If the assay is carried out *in vivo*, provided it has been carried out with satisfactory results on the final bulk vaccine, it may be omitted on the final lot.

IDENTIFICATION

The vaccine is shown to contain hepatitis A virus antigen by a suitable immunochemical method (*2.7.1*) using specific antibodies.

TESTS

Free formaldehyde (*2.4.18*): maximum 0.2 g/L.

Antimicrobial preservative. Where applicable, determine the amount of antimicrobial preservative by a suitable chemical or physico-chemical method. The amount is not less than the minimum amount shown to be effective and is not greater than 115 per cent of that stated on the label.

Sterility (*2.6.1*). The vaccine complies with the test for sterility.

Bacterial endotoxins (*2.6.14*): less than 2 IU of endotoxin per human dose.

ASSAY

Determine the antigen content of the vaccine using a suitable immunochemical method (*2.7.1*) by comparison with the reference preparation. The acceptance criteria are approved for a given reference preparation by the competent authority.

LABELLING

The label states:

- the biological origin of the cells used for the preparation of the vaccine,
- that the carrier contains influenza proteins prepared in eggs,
- that the vaccine is not to be frozen,
- that the vaccine is to be shaken before use.

07/2011:1056

HEPATITIS B VACCINE (rDNA)

Vaccinum hepatitidis B (ADNr)

DEFINITION

Hepatitis B vaccine (rDNA) is a preparation of hepatitis B surface antigen (HBsAg), a component protein of hepatitis B virus; the antigen may be adsorbed on a mineral carrier such as aluminium hydroxide or hydrated aluminium phosphate. The vaccine may also contain the adjuvant 3-*O*-desacyl-4′-monophosphoryl lipid A. The antigen is obtained by recombinant DNA technology.

PRODUCTION

GENERAL PROVISIONS

The vaccine shall have been shown to induce specific, protective antibodies in man. The production method shall have been shown to yield consistently vaccines that comply with the requirements for immunogenicity and safety.

The production method is validated to demonstrate that the product, if tested, would comply with the test for abnormal toxicity for immunosera and vaccines for human use (*2.6.9*).

Hepatitis B vaccine (rDNA) is produced by the expression of the viral gene coding for HBsAg in yeast (*Saccharomyces cerevisiae*) or mammalian cells (Chinese hamster ovary (CHO) cells or other suitable cell lines), purification of the resulting HBsAg and the rendering of this antigen into an immunogenic preparation. The suitability and safety of the cells are approved by the competent authority.

The vaccine may contain the product of the S gene (major protein), a combination of the S gene and pre-S2 gene products (middle protein) or a combination of the S gene, the pre-S2 gene and pre-S1 gene products (large protein).

Reference preparation: part of a representative batch shown to be at least as immunogenic in animals as a batch that, in clinical studies in young, healthy adults, produced not less than 95 per cent seroconversion, corresponding to a level of HBsAg neutralising antibody recognised to be protective, after a full-course primary immunisation. An antibody level not less than 10 mIU/mL is recognised as being protective.

CHARACTERISATION OF THE SUBSTANCE

Development studies are carried out to characterise the antigen. The complete protein, lipid and carbohydrate structure of the antigen is established. The morphological characteristics of the antigen particles are established by electron microscopy. The mean buoyant density of the antigen particles is determined by a physico-chemical method, such as gradient centrifugation. The antigenic epitopes are characterised. The protein fraction of the antigen is characterised in terms of the primary structure (for example, by determination of the amino-acid composition, by partial amino-acid sequence analysis and by peptide mapping).

CULTURE AND HARVEST

Identity, microbial purity, plasmid retention and consistency of yield are determined at suitable production stages. If mammalian cells are used, tests for extraneous agents and mycoplasmas are performed in accordance with general chapter *2.6.16. Tests for extraneous agents in viral vaccines for human use*, but using 200 mL of harvest in the test in cell culture for other extraneous agents.

PURIFIED ANTIGEN

Only a purified antigen that complies with the following requirements may be used in the preparation of the final bulk vaccine.

Total protein. The total protein is determined by a validated method. The content is within the limits approved for the specific product.

Vaccines

Antigen content and identification. The quantity and specificity of HBsAg is determined in comparison with the International Standard for HBsAg subtype *ad* or an in-house reference, by a suitable immunochemical method (*2.7.1*) such as radio-immunoassay (RIA), enzyme-linked immunosorbent assay (ELISA), immunoblot (preferably using a monoclonal antibody directed against a protective epitope) or single radial diffusion. The antigen/protein ratio is within the limits approved for the specific product.

The molecular weight of the major band revealed following sodium dodecyl sulfate polyacrylamide gel electrophoresis (SDS-PAGE) performed under reducing conditions corresponds to the value expected from the known nucleic acid and polypeptide sequences and possible glycosylation.

Antigenic purity. The purity of the antigen is determined by comparison with a reference preparation using liquid chromatography or other suitable methods such as SDS-PAGE with staining by acid blue 92 and silver. A suitable method is sensitive enough to detect a potential contaminant at a concentration of 1 per cent of total protein. Not less than 95 per cent of the total protein consists of hepatitis B surface antigen.

Composition. The content of proteins, lipids, nucleic acids and carbohydrates is determined.

Host-cell- and vector-derived DNA. If mammalian cells are used for production, not more than 10 pg of DNA in the quantity of purified antigen equivalent to a single human dose of vaccine.

Caesium. If a caesium salt is used during production, a test for residual caesium is carried out on the purified antigen. The content is within the limits approved for the specific product.

Sterility (*2.6.1*). The purified antigen complies with the test, carried out using 10 mL for each medium.

Additional tests on the purified antigen may be required depending on the production method used: for example, a test for residual animal serum where mammalian cells are used for production or tests for residual chemicals used during extraction and purification.

ADSORBED 3-O-DESACYL-4′-MONOPHOSPHORYL LIPID A BULK

If 3-*O*-desacyl-4′-monophosphoryl lipid A is included in the vaccine it complies with the monograph *3-O-desacyl-4′-monophosphoryl lipid A (2537)*. Where 3-*O*-desacyl-4′-monophosphoryl lipid A liquid bulk is adsorbed prior to inclusion in the vaccine, the adsorbed 3-*O*-desacyl-4′-monophosphoryl lipid A bulk complies with the following requirements.

Degree of adsorption of 3-*O*-desacyl-4′-monophosphoryl lipid A. The content of non-adsorbed 3-*O*-desacyl-4′-monophosphoryl lipid A in the adsorbed 3-*O*-desacyl-4′-monophosphoryl lipid A bulk is determined by a suitable method, for example gas chromatographic quantification of the *3-O-desacyl-4′-monophosphoryl lipid A (2537)* fatty acids in the supernatant, evaporated to dryness, after centrifugation.

pH (*2.2.3*). The pH is within the limits approved for the particular preparation.

Sterility (*2.6.1*). It complies with the test, carried out using 10 mL for each medium.

FINAL BULK VACCINE

An antimicrobial preservative, a mineral carrier, such as aluminium hydroxide or hydrated aluminium phosphate, and the adjuvant 3-*O*-desacyl-4′-monophosphoryl lipid A may be included in the formulation of the final bulk.

Only a final bulk vaccine that complies with the following requirements may be used in the preparation of the final lot.

Antimicrobial preservative. Where applicable, determine the amount of antimicrobial preservative by a suitable chemical or physico-chemical method. The amount is not less than 85 per cent and not greater than 115 per cent of the intended amount.

Sterility (*2.6.1*). The final bulk vaccine complies with the test, carried out using 10 mL for each medium.

FINAL LOT

Only a final lot that complies with each of the requirements given below under Identification, Tests and Assay may be released for use. Provided that the tests for free formaldehyde (where applicable) and antimicrobial preservative content (where applicable) have been carried out on the final bulk vaccine with satisfactory results, they may be omitted on the final lot. If the assay is carried out *in vivo*, then provided it has been carried out with satisfactory results on the final bulk vaccine, it may be omitted on the final lot.

Degree of adsorption. The degree of adsorption of the antigen and, where applicable, 3-*O*-desacyl-4′-monophosphoryl lipid A is assessed.

IDENTIFICATION

The assay or, where applicable, the electrophoretic profile, serves also to identify the vaccine. In addition, where applicable, the test for 3-*O*-desacyl-4′-monophosphoryl lipid A content also serves to identify the 3-*O*-desacyl-4′-monophosphoryl lipid A-containing vaccine.

TESTS

Aluminium (*2.5.13*): maximum 1.25 mg per single human dose, if aluminium hydroxide or hydrated aluminium phosphate is used as the adsorbent.

3-*O*-Desacyl-4′-monophosphoryl lipid A: minimum 80 per cent and maximum 120 per cent of the intended amount.

Where applicable, determine the content of 3-*O*-desacyl-4′-monophosphoryl lipid A by a suitable method, for example gas chromatography (*2.2.28*).

Free formaldehyde (*2.4.18*): maximum 0.2 g/L.

Antimicrobial preservative. Where applicable, determine the content of antimicrobial preservative by a suitable chemical or physico-chemical method. The amount is not less than the minimum amount shown to be effective and is not greater than 115 per cent of that stated on the label.

Sterility (*2.6.1*). The vaccine complies with the test.

Pyrogens (*2.6.8*). The vaccine complies with the test for pyrogens. Inject the equivalent of one human dose into each rabbit or, if the vaccine contains 3-*O*-desacyl-4′-monophosphoryl lipid A, inject per kilogram of the rabbit's mass an amount of the vaccine containing 2.5 µg of 3-*O*-desacyl-4′-monophosphoryl lipid A.

ASSAY

The vaccine complies with the assay of hepatitis B vaccine (rDNA) (*2.7.15*).

LABELLING

The label states:

- the amount of HBsAg per container;
- the type of cells used for production of the vaccine;
- the name and amount of the adjuvant and/or adsorbent used;
- that the vaccine must be shaken before use;
- that the vaccine must not be frozen.

07/2011:2441

HUMAN PAPILLOMAVIRUS VACCINE (rDNA)

Vaccinum papillomaviri humani (ADNr)

DEFINITION

Human papillomavirus vaccine (rDNA) is a preparation of purified virus-like particles (VLPs) composed of the major capsid protein (L1) of one or more human papillomavirus (HPV) genotypes; the antigens may be adsorbed on a mineral carrier such as aluminium hydroxide or hydrated aluminium phosphate. The vaccine may also contain the adjuvant 3-*O*-desacyl-4′-monophosphoryl lipid A. The antigens are obtained by recombinant DNA technology.

PRODUCTION

GENERAL PROVISIONS

The vaccine shall have been shown to induce specific neutralising antibodies in man. The production method shall have been shown to yield consistently vaccines comparable in quality with the vaccine of proven clinical efficacy and safety in man.

The production method is validated to demonstrate that the product, if tested, would comply with the test for abnormal toxicity for immunosera and vaccines for human use (*2.6.9*).

The vaccine is produced by the expression of the viral genes coding for the capsid proteins in yeast or in an insect cell/baculovirus expression vector system, purification of the resulting VLPs and the rendering of these particles into an immunogenic preparation. The suitability and safety of the expression systems are approved by the competent authority. Production of the vaccine is based on a seed lot/cell bank system. Unless otherwise justified and authorised, the virus and cells used for vaccine production shall not have undergone more passages from the master seed lot/cell bank than was used to prepare the vaccine shown in clinical studies to be satisfactory with respect to safety and efficacy.

Reference preparation. A batch of vaccine shown to be effective in clinical trials or a batch representative thereof is used as a reference vaccine. The reference vaccine is preferably stabilised and the stabilisation method shall have been shown to have no significant effect on the assay validity.

CHARACTERISATION

Characterisation of the VLPs is performed on lots produced during vaccine development, including the process validation batches. Characterisation includes protein composition, for example using techniques such as sodium dodecyl sulfate polyacrylamide gel electrophoresis (SDS-PAGE) and Western blotting or mass spectrometry, peptide mapping and/or terminal amino acid sequence analysis. Morphological characteristics of the VLPs and degree of aggregation are determined to confirm the presence of the conformational epitopes that are essential for efficacy. VLP characterisation may be done by atomic force microscopy and transmission electron microscopy, dynamic light scattering, epitope mapping and reactivity with neutralising monoclonal antibodies. In addition, the protein, lipid, nucleic acid and carbohydrate content are measured where applicable. The level of residual host-cell protein derived from insect cells meets acceptable safety criteria as set by the competent authority.

CELL BANKS AND SEED LOTS

Production in recombinant yeast cells. Only cell banks that have been satisfactorily characterised for identity, microbial purity, growth characteristics and stability shall be used for production. Gene homogeneity is studied for the master and working cell banks. A full description of the biological characteristics of the host cell and expression vectors is given. The physiological measures used to promote and control the expression of the cloned gene in the host cell are described in detail. This includes genetic markers of the host cell, the construction, genetics and structure of the expression vector, and the origin and identification of the gene that is being cloned. The nucleotide sequence of the gene insert and of adjacent segments of the vector and restriction-enzyme mapping of the vector containing the gene insert are provided. Data that demonstrates the stability of the expression system during storage of the recombinant working cell bank up to or beyond the passage level used for production is provided.

Production in an insect cell/baculovirus expression vector system

- *Insect cell substrate*. Only cell banks that have been satisfactorily characterised for identity, purity, growth characteristics, stability, extraneous agents and tumorigenicity shall be used for production. Such characterisation is performed at suitable stages of production in accordance with general chapters *5.2.3. Cell substrates for the production of vaccines for human use* and *2.6.16. Tests for extraneous agents in viral vaccines for human use*. Special attention is given to insect-borne viruses, in particular insect-borne potential human pathogens (e.g. arboviruses). Adventitious infectious agents of insect cells may be without cytopathic effect. Tests therefore include nucleic acid amplification techniques, and other tests such as electron microscopy and co-cultivation.
- *Recombinant baculovirus*. The use of the recombinant baculovirus vector is based on a seed-lot system with a defined number of passages between the original virus and the master and the working seed-lots, as approved by the competent authorities. The recombinant baculovirus expression vector contains the coding sequence of the HPV L1 antigen. Segments of the expression construct are analysed using nucleic acid amplification techniques in conjunction with other tests performed on the purified recombinant protein for assuring the quality and consistency of the expressed HPV L1 antigens. The recombinant baculovirus used in the production of HPV vaccines is identified by historical records, which include information on the origin and identity of the gene being cloned as well as the construction, genetics and structure of the baculovirus expression vector(s). The genetic stability of the expression construct is demonstrated from the baculovirus master seed up to at least the highest level used in production and preferably beyond this level.

Recombinant baculovirus seed lots are prepared in large quantities and stored at temperatures favourable for stability.

Only a seed lot that complies with the following requirements may be used for virus propagation.

Identification. The master and working seed lots are identified by the HPV type of the inserted gene of origin, by an appropriate method such as nucleic acid amplification techniques (NAT) (*2.6.21*).

Virus concentration. The virus concentration of the master and working seed lots is determined to monitor consistency of production.

Extraneous agents (*2.6.16*). The working seed lot complies with the requirements for seed lots and control cells. Special attention is given to *Spiroplasma* spp. and insect-borne viruses, in particular insect-borne potential human pathogens (e.g. arboviruses).

PROPAGATION AND HARVEST

All processing of the cell banks and baculovirus seed lots and subsequent cell cultures is done under aseptic conditions in an area where no other cells are being handled.

Where justified and authorised for production in an insect cell/baculovirus expression vector system, a stored virus intermediate culture that complies with the 5 following tests may be used for virus propagation.

Vaccines

Identification. Each stored virus intermediate culture is identified by HPV type, by an immunological assay using specific antibodies or by a molecular identity test such as NAT (*2.6.21*).

Bacterial and fungal contamination. Each stored virus intermediate culture complies with the test for sterility (*2.6.1*), carried out using 10 mL for each medium.

Virus concentration. The virus concentration of each stored baculovirus intermediate culture is determined by a suitable method such as plaque assay or NAT (*2.6.21*) in order to monitor consistency of production.

Extraneous agents (*2.6.16*). Each stored virus intermediate culture complies with the tests for extraneous agents.

Control cells. The control cells of the production cell culture from which each stored virus intermediate is derived comply with a test for identity and with the requirements for extraneous agents (*2.6.16*).

Production in recombinant yeast cells. Identity, microbial purity, plasmid retention and consistency of yield are determined at suitable production stages.

Production in an insect cell/baculovirus expression vector system. Insect cell cultures are inoculated with recombinant baculovirus at a defined multiplicity of infection as approved by the competent authority. Several single harvests may be pooled before testing. No antibiotics are added at the time of harvesting or at any later stage of manufacturing.

SINGLE HARVESTS

Only a single harvest or a pool of single harvests that complies with the following requirements may be used in the preparation of the purified monovalent antigen.

Identification. Each single harvest is identified as the appropriate HPV type by immunological assay or by a molecular biology-based assay, for example hybridisation or polymerase chain reaction (PCR).

Bacterial and fungal contamination. In case of production in an insect cell/baculovirus expression vector system the single harvest complies with the test for sterility (*2.6.1*). In case of production in yeast cells the single harvest is tested for culture purity by inoculation of suitable medium to ensure no growth other than the host organism.

Extraneous agents (*2.6.16*). In case of production in an insect cell/baculovirus expression vector system the single harvest complies with the tests for extraneous agents. Special attention is given to insect-borne viruses as mentioned under Cell banks and seed lots.

Control cells. In case of production in an insect cell/baculovirus expression vector system the control cells comply with a test for identification and with the requirements for extraneous agents (*2.6.16*). Special attention is given to insect-borne viruses as mentioned under Cell banks and seed lots.

PURIFIED MONOVALENT ANTIGEN

Harvests are purified using validated methods. When an insect cell/baculovirus expression vector system substrate is used, the production process is validated for its capacity to eliminate (by removal and/or inactivation) adventitious viruses and recombinant baculoviruses.

Only a purified monovalent antigen that complies with the following requirements may be used in the preparation of the final bulk. In agreement with the competent authority one or more of the tests mentioned below may be omitted if performed on the adsorbed monovalent antigen.

Total protein. The total protein is determined by a validated method. The content is within the limits approved for the particular product.

Antigen content and identification. The quantity and specificity of each antigen type is determined by a suitable immunochemical method (*2.7.1*) such as radio-immunoassay (RIA), enzyme-linked immunosorbent assay (ELISA), immunoblot (preferably using a monoclonal antibody directed against a protective epitope) or single radial diffusion. The antigen/protein ratio may be determined and is within the limits approved for the particular product.

Antigenic purity. The purity of each purified monovalent antigen is determined by a suitable method, such as SDS-PAGE with quantification by densitometric analysis, the limit of detection being 1 per cent of impurities or better with respect to total protein. A reference preparation is used to validate each test. The protein purity is calculated as the ratio of the L1 protein-related bands relative to the total protein bands, expressed as a percentage. For the genotypes included in the vaccine, the value calculated for purity is within the limits approved for the particular product.

Percent intact L1 monomer. The antigenic purity assay serves also to assess the integrity of the L1 monomer. The percent intact L1 monomer is the ratio of the intact L1 monomer to the total protein, expressed as a percentage.

VLP size and structure. The size and structure of the VLPs is established and monitored by a suitable method such as dynamic light scattering. The size is within the limits approved for the particular product.

Composition. The protein, lipid, nucleic acid and carbohydrate contents are determined, where applicable.

Host-cell and vector-derived DNA: maximum 10 ng of DNA in a quantity of purified antigen equivalent to a single human dose of vaccine, determined in each monovalent purified antigen by sensitive methods.

Residual host-cell proteins. Tests for residual host-cell proteins are carried out. The content is within the limits approved for the particular product.

Chemicals used for disruption and purification. Tests for the chemicals used for purification or other stages of production are carried out. The content is within the limits approved for the particular products.

Sterility (*2.6.1*). Each purified monovalent antigen complies with the test, carried out using 10 mL for each medium.

ADSORBED MONOVALENT ANTIGEN

The purified monovalent antigens may be adsorbed onto a mineral vehicle such as an aluminium salt.

Only an adsorbed monovalent antigen that complies with the following requirements may be used in the preparation of the final bulk.

Sterility (*2.6.1*). Each adsorbed monovalent antigen complies with the test, carried out using 10 mL for each medium.

Bacterial endotoxins (*2.6.14*). Each adsorbed monovalent antigen is tested for bacterial endotoxins. The content is within the limits approved for the particular product.

Antigen content and identification. Each antigen type is identified by a suitable immunochemical method (*2.7.1*) such as radio-immunoassay (RIA), enzyme-linked immunosorbent assay (ELISA), immunoblot (preferably using a monoclonal antibody directed against a protective epitope) or single radial diffusion. The antigen/protein ratio is determined.

Mineral vehicle concentration. Where applicable, each adsorbed monovalent antigen is tested for the content of mineral vehicle. The content is within the limits approved for the particular product.

ADSORBED 3-O-DESACYL-4′-MONOPHOSPHORYL LIPID A BULK

If 3-*O*-desacyl-4′-monophosphoryl lipid A is included in the vaccine it complies with the monograph *3-O-desacyl-4′-monophosphoryl lipid A (2537)*. Where 3-*O*-desacyl-4′-monophosphoryl lipid A is adsorbed prior to inclusion in the vaccine, the adsorbed 3-*O*-desacyl-4′-monophosphoryl lipid A bulk complies with the following requirements.

Degree of adsorption of 3-*O*-desacyl-4′-monophosphoryl lipid A. The content of non-adsorbed 3-*O*-desacyl-4′-monophosphoryl lipid A in the adsorbed 3-*O*-desacyl-4′-monophosphoryl lipid A bulk is determined by a suitable method, for example gas chromatographic quantification of the *3-O-desacyl-4′-monophosphoryl lipid A (2537)* fatty acids in the supernatant, evaporated to dryness, after centrifugation.

pH (*2.2.3*). The pH is within the limits approved for the particular preparation.

Sterility (*2.6.1*). It complies with the test, carried out using 10 mL for each medium.

FINAL BULK VACCINE

The final bulk vaccine is prepared directly from each purified monovalent antigen HPV type or adsorbed purified monovalent antigen HPV type. An antimicrobial preservative, a mineral vehicle such as an aluminium salt and the adjuvant 3-*O*-desacyl-4′-monophosphoryl lipid A may be included in the formulation of the final bulk.

Only a final bulk that complies with the following requirements may be used in the preparation of the final lot.

Antimicrobial preservative. Where applicable, determine the amount of antimicrobial preservative by a suitable chemical or physico-chemical method. The amount is not less than 85 per cent and not greater than 115 per cent of the intended content.

Sterility (*2.6.1*). The final bulk vaccine complies with the test, carried out using 10 mL for each medium.

FINAL LOT

Only a final lot that complies with each of the requirements given below under Identification, Tests and Assay may be released for use. Provided that the test for antimicrobial preservative content (where applicable) has been carried out with satisfactory results on the final bulk vaccine, it may be omitted on the final lot. If an *in vivo* assay is carried out, then provided it has been carried out with satisfactory results on the final bulk vaccine, it may be omitted on the final lot.

Adjuvants. If the vaccine contains an adjuvant, the amount is determined and shown to be within acceptable limits with respect to the expected amount. A suitable method for 3-*O*-desacyl-4′-monophosphoryl lipid A is, for example, gas chromatography.

Degree of adsorption. The degree of adsorption of each antigen and, where applicable, 3-*O*-desacyl-4′-monophosphoryl lipid A is assessed.

IDENTIFICATION

The vaccine is shown to contain the different types of HPV antigen by a suitable immunochemical method (*2.7.1*). The *in vitro* assay may serve to identify the vaccine. In addition, where applicable, the test for 3-*O*-desacyl-4′-monophosphoryl lipid A content also serves to identify the 3-*O*-desacyl-4′-monophosphoryl lipid A-containing vaccine.

TESTS

Aluminium (*2.5.13*): maximum 1.25 mg per single human dose, if aluminium hydroxide or hydrated aluminium phosphate is used as the adsorbent.

3-*O*-Desacyl-4′-monophosphoryl lipid A: minimum 80 per cent and maximum 120 per cent of the intended amount.

Where applicable, determine the content of 3-*O*-desacyl-4′-monophosphoryl lipid A by a suitable method, for example gas chromatography (*2.2.28*).

Antimicrobial preservative. Where applicable, determine the content of antimicrobial preservative by a suitable chemical or physico-chemical method. The amount is not less than the minimum amount shown to be effective and is not greater than 115 per cent of that stated on the label.

Sterility (*2.6.1*). The vaccine complies with the test.

Bacterial endotoxins (*2.6.14*): maximum 5 IU per single human dose. If the adjuvant prevents the determination of endotoxin, a suitable in-process test is carried out.

ASSAY

The assay is performed by an *in vivo* test or an *in vitro* test having acceptance criteria established by correlation studies against an *in vivo* test.

***In vivo* test**. A suitable *in vivo* assay method consists of the injection of not fewer than 3 dilutions of the vaccine to be examined and of a reference vaccine preparation, using for each dilution a group of a suitable number of female mice of a suitable strain. The vaccine is diluted in a solution of *sodium chloride R* containing the aluminium adjuvant used for the vaccine production. The mice are 6-8 weeks old at the time of injection, and each mouse is given a 0.5 mL injection. A preimmunisation serum sample is taken prior to inoculation, and a final serum sample is taken at a defined time between days 21 and 28. Assay the individual sera for specific neutralising antibodies against each HPV type by a suitable immunochemical method (*2.7.1*).

The test is not valid unless:

- for both the vaccine to be examined and the reference vaccine, the ED_{50} lies between the smallest and the largest doses given to the animals;
- the statistical analysis shows no significant deviation from linearity or parallelism;
- the confidence limits (P = 0.95) are within the limits approved for the particular product.

***In vitro* test**. Carry out an immunochemical determination (*2.7.1*) of each antigen genotype content. Enzyme-linked immunosorbent assay (ELISA) and radio-immunoassay (RIA) using monoclonal antibodies specific for protection-inducing epitopes of the L1 protein have been shown to be suitable. Suitable numbers of dilutions of the vaccine to be examined and a manufacturer's reference preparation are used and a suitable model is used to analyse the data. For each type, the antigen content is within the limits approved for the particular product.

LABELLING

The label states:

- the amount of L1 proteins and the genotype of HPV contained in the vaccine;
- the cell substrate used for production of the vaccine;
- the name and amount of the adjuvant and/or adsorbent used;
- that the vaccine must not be frozen.

01/2008:0158

INFLUENZA VACCINE (SPLIT VIRION, INACTIVATED)

Vaccinum influenzae inactivatum ex virorum fragmentis praeparatum

DEFINITION

Influenza vaccine (split virion, inactivated) is a sterile, aqueous suspension of a strain or strains of influenza virus, type A or B, or a mixture of strains of the 2 types grown individually in fertilised hens' eggs, inactivated and treated so that the integrity of the virus particles has been disrupted without diminishing the antigenic properties of the haemagglutinin and neuraminidase antigens. The stated amount of haemagglutinin antigen for each strain present in the vaccine is 15 µg per dose, unless clinical evidence supports the use of a different amount.

The vaccine is a slightly opalescent liquid.

Vaccines

PRODUCTION

The production method is validated to demonstrate that the product, if tested, would comply with the test for abnormal toxicity for immunosera and vaccines for human use (*2.6.9*).

CHOICE OF VACCINE STRAIN

The World Health Organization reviews the world epidemiological situation annually and if necessary recommends the strains that correspond to this epidemiological evidence.

Such strains are used in accordance with the regulations in force in the signatory States of the Convention on the Elaboration of a European Pharmacopoeia. It is now common practice to use reassorted strains giving high yields of the appropriate surface antigens. The origin and passage history of virus strains shall be approved by the competent authority.

SUBSTRATE FOR VIRUS PROPAGATION

Influenza virus seed to be used in the production of vaccine is propagated in fertilised eggs from chicken flocks free from specified pathogens (SPF) (*5.2.2*) or in suitable cell cultures (*5.2.4*), such as chick-embryo fibroblasts or chick kidney cells obtained from SPF chicken flocks (*5.2.2*). For production, the virus of each strain is grown in the allantoic cavity of fertilised hens' eggs from healthy flocks.

VIRUS SEED LOT

The production of vaccine is based on a seed-lot system. Working seed lots represent not more than 15 passages from the approved reassorted virus or the approved virus isolate. The final vaccine represents 1 passage from the working seed lot. The haemagglutinin and neuraminidase antigens of each seed lot are identified as originating from the correct strain of influenza virus by suitable methods.

Only a working virus seed lot that complies with the following requirements may be used in the preparation of the monovalent pooled harvest.

Bacterial and fungal contamination. Carry out the test for sterility (*2.6.1*), using 10 mL for each medium.

Mycoplasmas (*2.6.7*). Carry out the test for mycoplasmas, using 10 mL.

VIRUS PROPAGATION AND HARVEST

An antimicrobial agent may be added to the inoculum. After incubation at a controlled temperature, the allantoic fluids are harvested and combined to form a monovalent pooled harvest. An antimicrobial agent may be added at the time of harvest. At no stage in the production is penicillin or streptomycin used.

MONOVALENT POOLED HARVEST

To limit the possibility of contamination, inactivation is initiated as soon as possible after preparation. The virus is inactivated by a method that has been demonstrated on 3 consecutive batches to be consistently effective for the manufacturer. The inactivation process shall have been shown to be capable of inactivating the influenza virus without destroying its antigenicity; the process should cause minimum alteration of the haemagglutinin and neuraminidase antigens. The inactivation process shall also have been shown to be capable of inactivating avian leucosis viruses and mycoplasmas. If the monovalent pooled harvest is stored after inactivation, it is held at 5 ± 3 °C. If formaldehyde solution is used, the concentration does not exceed 0.2 g/L of CH_2O at any time during inactivation; if betapropiolactone is used, the concentration does not exceed 0.1 per cent *V/V* at any time during inactivation.

Before or after the inactivation procedure, the monovalent pooled harvest is concentrated and purified by high-speed centrifugation or other suitable method and the virus particles are disrupted into component subunits by the use of approved procedures. For each new strain, a validation test is carried out to show that the monovalent bulk consists predominantly of disrupted virus particles.

Only a monovalent pooled harvest that complies with the following requirements may be used in the preparation of the final bulk vaccine.

Haemagglutinin antigen. Determine the content of haemagglutinin antigen by an immunodiffusion test (*2.7.1*), by comparison with a haemagglutinin antigen reference preparation or with an antigen preparation calibrated against it[(1)]. Carry out the test at 20-25 °C.

For some vaccines, the physical form of the haemagglutinin particles prevents quantitative determination by immunodiffusion after inactivation of the virus. For these vaccines, a determination of haemagglutinin antigen is made on the monovalent pooled harvest before inactivation. The production process is validated to demonstrate suitable conservation of haemagglutinin antigen and a suitable tracer is used for formulation, for example, protein content.

Neuraminidase antigen. The presence and type of neuraminidase antigen are confirmed by suitable enzymatic or immunological methods on the first 3 monovalent pooled harvests from each working seed lot.

Sterility (*2.6.1*). Carry out the test for sterility, using 10 mL for each medium.

Residual infectious virus. Carry out the test described below under Tests.

Chemicals used for disruption. Tests are carried out on the monovalent pooled harvest for the chemicals used for disruption, the limits being approved by the competent authority.

FINAL BULK VACCINE

Appropriate quantities of the monovalent pooled harvests are blended to make the final bulk vaccine.

Only a final bulk vaccine that complies with the following requirements may be used in the preparation of the final lot.

Antimicrobial preservative. Where applicable, determine the amount of antimicrobial preservative by a suitable chemical method. The content is not less than 85 per cent and not greater than 115 per cent of the intended amount.

Sterility (*2.6.1*). Carry out the test for sterility, using 10 mL for each medium.

FINAL LOT

The final bulk vaccine is distributed aseptically into sterile, tamper-proof containers. The containers are closed so as to prevent contamination.

Only a final lot that is satisfactory with respect to each of the requirements given below under Tests and Assay may be released for use. Provided that the test for residual infectious virus has been performed with satisfactory results on each monovalent pooled harvest and that the tests for free formaldehyde, ovalbumin and total protein have been performed with satisfactory results on the final bulk vaccine, they may be omitted on the final lot.

IDENTIFICATION

The assay serves to confirm the antigenic specificity of the vaccine.

TESTS

Residual infectious virus. Inoculate 0.2 mL of the vaccine into the allantoic cavity of each of 10 fertilised eggs and incubate at 33-37 °C for 3 days. The test is not valid unless at least 8 of the 10 embryos survive. Harvest 0.5 mL of the allantoic fluid from each surviving embryo and pool the fluids. Inoculate 0.2 mL of the pooled fluid into a further 10 fertilised

(1) Reference haemagglutinin antigens are available from the National Institute for Biological Standards and Control, Blanche Lane, South Mimms, Potters Bar, Hertfordshire EN6 3QG, Great Britain.

eggs and incubate at 33-37 °C for 3 days. The test is not valid unless at least 8 of the 10 embryos survive. Harvest about 0.1 mL of the allantoic fluid from each surviving embryo and examine each individual harvest for live virus by a haemagglutination test. If haemagglutination is found for any of the fluids, carry out for that fluid a further passage in eggs and test for haemagglutination; no haemagglutination occurs.

Antimicrobial preservative. Where applicable, determine the amount of antimicrobial preservative by a suitable chemical method. The content is not less than the minimum amount shown to be effective and is not greater than 115 per cent of the quantity stated on the label.

Free formaldehyde (*2.4.18*): maximum 0.2 g/L, where applicable.

Ovalbumin. Not more than the quantity stated on the label and in any case not more than 1 µg per human dose, determined by a suitable immunochemical method (*2.7.1*) using a suitable reference preparation of ovalbumin.

Total protein. Not more than 6 times the total haemagglutinin content of the vaccine as determined in the assay, but in any case, not more than 100 µg of protein per virus strain per human dose and not more than a total of 300 µg of protein per human dose.

Sterility (*2.6.1*). It complies with the test for sterility.

Bacterial endotoxins (*2.6.14*): less than 100 IU per human dose.

ASSAY

Determine the content of haemagglutinin antigen by an immunodiffusion test (*2.7.1*), by comparison with a haemagglutinin antigen reference preparation or with an antigen preparation calibrated against it[(1)]. Carry out the test at 20-25 °C. The confidence limits (P = 0.95) are not less than 80 per cent and not more than 125 per cent of the estimated haemagglutinin antigen content. The lower confidence limit (P = 0.95) is not less than 80 per cent of the amount stated on the label for each strain.

For some vaccines, quantitative determination of haemagglutinin antigen with respect to available reference preparations is not possible. An immunological identification of the haemagglutinin antigen and a semi-quantitative determination are carried out instead by suitable methods.

LABELLING

The label states:

- that the vaccine has been prepared on eggs,
- the strain or strains of influenza virus used to prepare the vaccine,
- the method of inactivation,
- the haemagglutinin content in micrograms per virus strain per dose,
- the maximum amount of ovalbumin,
- the season during which the vaccine is intended to protect.

01/2008:0869

INFLUENZA VACCINE (SURFACE ANTIGEN, INACTIVATED)

Vaccinum influenzae inactivatum ex corticis antigeniis praeparatum

DEFINITION

Influenza vaccine (surface antigen, inactivated) is a sterile suspension of a strain or strains of influenza virus, type A or B, or a mixture of strains of the 2 types grown individually in fertilised hens' eggs, inactivated and treated so that the preparation consists predominantly of haemagglutinin and neuraminidase antigens, without diminishing the antigenic properties of these antigens. The stated amount of haemagglutinin antigen for each strain present in the vaccine is 15 µg per dose, unless clinical evidence supports the use of a different amount. The vaccine may contain an adjuvant.

PRODUCTION

The production method is validated to demonstrate that the product, if tested, would comply with the test for abnormal toxicity for immunosera and vaccines for human use (*2.6.9*).

CHOICE OF VACCINE STRAIN

The World Health Organization reviews the world epidemiological situation annually and if necessary recommends the strains that correspond to this epidemiological evidence.

Such strains are used in accordance with the regulations in force in the signatory states of the Convention on the Elaboration of a European Pharmacopoeia. It is now common practice to use reassorted strains giving high yields of the appropriate surface antigens. The origin and passage history of virus strains shall be approved by the competent authority.

SUBSTRATE FOR VIRUS PROPAGATION

Influenza virus seed to be used in the production of vaccine is propagated in fertilised eggs from chicken flocks free from specified pathogens (SPF) (*5.2.2*) or in suitable cell cultures (*5.2.4*), such as chick-embryo fibroblasts or chick kidney cells obtained from SPF chicken flocks (*5.2.2*). For production, the virus of each strain is grown in the allantoic cavity of fertilised hens' eggs from healthy flocks.

VIRUS SEED LOT

The production of vaccine is based on a seed-lot system. Working seed lots represent not more than 15 passages from the approved reassorted virus or the approved virus isolate. The final vaccine represents one passage from the working seed lot. The haemagglutinin and neuraminidase antigens of each seed lot are identified as originating from the correct strain of influenza virus by suitable methods.

Only a working virus seed lot that complies with the following requirements may be used in the preparation of the monovalent pooled harvest.

Bacterial and fungal contamination. Carry out the test for sterility (*2.6.1*), using 10 mL for each medium.

Mycoplasmas (*2.6.7*). Carry out the test for mycoplasmas, using 10 mL.

VIRUS PROPAGATION AND HARVEST

An antimicrobial agent may be added to the inoculum. After incubation at a controlled temperature, the allantoic fluids are harvested and combined to form a monovalent pooled harvest. An antimicrobial agent may be added at the time of harvest. At no stage in the production is penicillin or streptomycin used.

MONOVALENT POOLED HARVEST

To limit the possibility of contamination, inactivation is initiated as soon as possible after preparation. The virus is inactivated by a method that has been demonstrated on 3 consecutive batches to be consistently effective for the manufacturer. The inactivation process shall have been shown to be capable of inactivating the influenza virus without destroying its antigenicity; the process should cause minimum alteration of the haemagglutinin and neuraminidase antigens. The inactivation process shall also have been shown to be capable of inactivating avian leucosis viruses and mycoplasmas. If the monovalent pooled harvest is stored after inactivation, it is held at 5 ± 3 °C. If formaldehyde solution is used, the concentration does not exceed 0.2 g/L of CH_2O at any time during inactivation; if betapropiolactone is used, the concentration does not exceed 0.1 per cent *V/V* at any time during inactivation.

Before or after the inactivation process, the monovalent pooled harvest is concentrated and purified by high-speed centrifugation or other suitable method. Virus particles are

Vaccines

disrupted into component subunits by approved procedures and further purified so that the monovalent bulk consists mainly of haemagglutinin and neuraminidase antigens.

Only a monovalent pooled harvest that complies with the following requirements may be used in the preparation of the final bulk vaccine.

Haemagglutinin antigen. Determine the content of haemagglutinin antigen by an immunodiffusion test (*2.7.1*), by comparison with a haemagglutinin antigen reference preparation or with an antigen preparation calibrated against it[(2)]. Carry out the test at 20-25 °C.

Neuraminidase antigen. The presence and type of neuraminidase antigen are confirmed by suitable enzymatic or immunological methods on the first 3 monovalent pooled harvests from each working seed lot.

Sterility (*2.6.1*). Carry out the test for sterility, using 10 mL for each medium.

Residual infectious virus. Carry out the test described below under Tests.

Purity. The purity of the monovalent pooled harvest is examined by polyacrylamide gel electrophoresis or by other approved techniques. Mainly haemagglutinin and neuraminidase antigens shall be present.

Chemicals used for disruption and purification. Tests are carried out on the monovalent pooled harvest for the chemicals used for disruption and purification, the limits being approved by the competent authority.

FINAL BULK VACCINE

Appropriate quantities of the monovalent pooled harvests are blended to make the final bulk vaccine. An adjuvant may be added.

Only a final bulk vaccine that complies with the following requirements may be used in the preparation of the final lot.

Antimicrobial preservative. Where applicable, determine the amount of antimicrobial preservative by a suitable chemical method. The content is not less than 85 per cent and not greater than 115 per cent of the intended amount.

Sterility (*2.6.1*). Carry out the test for sterility, using 10 mL for each medium.

FINAL LOT

The final bulk vaccine is distributed aseptically into sterile, tamper-proof containers. The containers are closed so as to prevent contamination.

Only a final lot that is satisfactory with respect to each of the requirements given below under Tests and Assay may be released for use. Provided that the test for residual infectious virus has been performed with satisfactory results on each monovalent pooled harvest and that the tests for free formaldehyde, ovalbumin and total protein have been performed with satisfactory results on the final bulk vaccine, they may be omitted on the final lot.

If the ovalbumin and formaldehyde content cannot be determined on the final lot, owing to interference from the adjuvant, they are determined on the monovalent pooled harvest, the acceptance limits being set to ensure that the limits for the final product will not be exceeded.

If the vaccine contains an adjuvant, suitable tests for identity and other relevant quality criteria are carried out on the final lot. These tests may include chemical and physical analysis, determination of particle size and determination of the number of particles per unit volume.

IDENTIFICATION

The assay serves to confirm the antigenic specificity of the vaccine.

TESTS

Residual infectious virus. Inoculate 0.2 mL of the vaccine into the allantoic cavity of each of 10 fertilised eggs and incubate at 33-37 °C for 3 days. The test is not valid unless at least 8 of the 10 embryos survive. Harvest 0.5 mL of the allantoic fluid from each surviving embryo and pool the fluids. Inoculate 0.2 mL of the pooled fluid into a further 10 fertilised eggs and incubate at 33-37 °C for 3 days. The test is not valid unless at least 8 of the 10 embryos survive. Harvest about 0.1 mL of the allantoic fluid from each surviving embryo and examine each individual harvest for live virus by a haemagglutination test. If haemagglutination is found for any of the fluids, carry out for that fluid a further passage in eggs and test for haemagglutination; no haemagglutination occurs.

Antimicrobial preservative. Where applicable, determine the amount of antimicrobial preservative by a suitable chemical method. The content is not less than the minimum amount shown to be effective and is not greater than 115 per cent of the quantity stated on the label.

Free formaldehyde (*2.4.18*): maximum 0.2 g/L, where applicable.

Ovalbumin. Not more than the quantity stated on the label and in any case not more than 1 µg per human dose, determined by a suitable immunochemical method (*2.7.1*) using a suitable reference preparation of ovalbumin.

Total protein. Not more than 40 µg of protein other than haemagglutinin per virus strain per human dose and not more than a total of 120 µg of protein other than haemagglutinin per human dose.

Sterility. It complies with the test for sterility (*2.6.1*).

Bacterial endotoxins (*2.6.14*): less than 100 IU per human dose.

ASSAY

Determine the content of haemagglutinin antigen by an immunodiffusion test (*2.7.1*), by comparison with a haemagglutinin antigen reference preparation or with an antigen preparation calibrated against it[(2)]. Carry out the test at 20-25 °C. The confidence limits ($P = 0.95$) are not less than 80 per cent and not more than 125 per cent of the estimated content. The lower confidence limit ($P = 0.95$) haemagglutinin antigen is not less than 80 per cent of the amount stated on the label for each strain.

LABELLING

The label states:

- that the vaccine has been prepared on eggs,
- the strain or strains of influenza virus used to prepare the vaccine,
- the method of inactivation,
- the haemagglutinin content in micrograms per virus strain per dose,
- the season during which the vaccine is intended to protect,
- the maximum amount of ovalbumin,
- where applicable, the name and the quantity of adjuvant used.

(2) Reference haemagglutinin antigens are available from the National Institute for Biological Standards and Control, Blanche Lane, South Mimms, Potters Bar, Hertfordshire EN6 3QG, Great Britain.

04/2009:2149

INFLUENZA VACCINE (SURFACE ANTIGEN, INACTIVATED, PREPARED IN CELL CULTURES)

Vaccinum influenzae inactivatum ex cellulis corticisque antigeniis praeparatum

DEFINITION

Influenza vaccine (surface antigen, inactivated, prepared in cell cultures) is a sterile, aqueous suspension of a strain or strains of influenza virus, type A or B, or a mixture of strains of the 2 types grown individually in cell cultures, inactivated and treated so that the preparation consists predominantly of haemagglutinin and neuraminidase antigens, preserving adequate antigenic properties of these antigens. The stated amount of haemagglutinin antigen for each strain present in the vaccine is 15 µg per dose, unless clinical evidence supports the use of a different amount. The vaccine is a clear or slightly opalescent liquid. The vaccine may contain an adjuvant. This monograph applies to vaccines produced in diploid or continuous cell lines of mammalian origin.

PRODUCTION

GENERAL PROVISIONS

Production of the vaccine is based on a virus seed-lot system and a cell-bank system. The production method shall have been shown to yield consistently vaccines that comply with the requirements for immunogenicity, safety and stability.

The production method is validated to demonstrate that the product, if tested, would comply with the test for abnormal toxicity for immunosera and vaccines for human use (*2.6.9*).

The production method is validated to demonstrate suitable reduction of residual host-cell protein. With the agreement of the competent authority and for each specific product, routine testing for residual host-cell proteins may be omitted based on the results of validation studies for the product. Guidance on the principles of such validation studies is given, for example, in the monograph *Products of recombinant DNA technology (0784)*, in particular in the sections 'Validation of the production process - Extraction and purification' and 'Production consistency - Host-cell-derived proteins'.

CHOICE OF VACCINE STRAIN

The World Health Organization reviews the world epidemiological situation annually and if necessary recommends new strains corresponding to this epidemiological evidence.

Such strains are used in accordance with the regulations in force in the signatory states of the Convention on the Elaboration of a European Pharmacopoeia. It is now common practice to use reassorted strains giving high yields of the appropriate surface antigens. The origin and passage history of virus strains shall be approved by the competent authority.

SUBSTRATE FOR VIRUS PROPAGATION

Influenza virus used in the preparation of seed lots is propagated in fertilised eggs from chicken flocks free from specified pathogens (SPF) (*5.2.2*) or in suitable cell cultures (*5.2.3*), such as chick-embryo fibroblasts, chick kidney cells obtained from SPF chicken flocks (*5.2.2*), or a diploid or continuous cell line. The final passage for establishment of the working seed lot is prepared in the cell line used for routine production. For this production, the virus of each strain is propagated in a diploid or continuous cell line (*5.2.3*).

VIRUS SEED LOT

The production of vaccine is based on a seed-lot system. Each of the strains of influenza virus used shall be identified by historical records that include information on the origin of the strain and its subsequent manipulation. Working seed lots represent not more than 15 passages from the approved reassorted virus or the approved virus isolate. The final vaccine represents 1 passage from the working seed lot.

Only a seed lot that complies with the following requirements may be used for virus propagation.

Identification. The haemagglutinin and neuraminidase antigens of each master and working seed lot are identified as originating from the correct strain of influenza virus by suitable methods.

Virus concentration. The virus concentration of each working seed lot is determined. Where applicable, the virus concentration of each master seed lot is determined.

Extraneous agents (*2.6.16*). The working seed lots comply with the requirements for seed lots. It is recognised that due to a seasonal change in one or more of the influenza vaccine strains, timely testing of a virus seed for extraneous agents according to general chapter *2.6.16* may be problematic (e.g. duration of *in vivo* tests, timely availability of specific neutralising antisera). In agreement with the competent authority, and in light of a risk assessment, rapid assays (e.g. multiplex PCR) may be applied as alternatives to general chapter *2.6.16* following validation.

Such risk assessment and validation includes more general considerations on potential contaminants of the virus isolates, the susceptibility of the cell substrate to such viruses and the capacity of the production process for viral removal or inactivation; validation includes also comparative data on testing of seeds according to general chapter *2.6.16* and the proposed rapid assays. Each applied PCR/NAT test (*2.6.21*) must be shown to be suitable for its intended use by appropriate analytical validation. The risk assessment is reviewed when new information becomes available on potential viral contaminants, and the justification of the chosen PCR panel of extraneous agents tested for is provided to the competent authority within the annual update. This update also includes vaccine strain-specific aspects such as specific PCR inhibitory effects.

If an agent is detected in a virus seed and the mammalian cells used for production are shown to be susceptible to this agent, the virus seed is not used for vaccine production.

If an agent is detected in a virus seed and the mammalian cells are not susceptible to the agent, validation of the production process to demonstrate removal or inactivation of the agent is carried out. If removal or inactivation cannot be demonstrated, the inactivated monovalent harvest is tested to demonstrate absence of any contaminant identified in the virus seed.

PROPAGATION AND SINGLE HARVEST

All processing of the cell bank and subsequent cell cultures is done under aseptic conditions in an area where no other cells are being handled at the same time. Approved animal serum (but not human serum) may be used in the cell culture media. Serum and trypsin used in the preparation of cell suspensions or media are shown to be free from extraneous agents. The cell culture media may contain a pH indicator, such as phenol red, and antibiotics at the lowest effective concentration. Not less than 500 mL of the cell cultures employed for vaccine production are set aside as uninfected cell cultures (control cells).

Only a single harvest that complies with the following requirements may be used in the preparation of the vaccine.

Identification. The test for antigen content also serves to identify the single harvest.

Bacterial and fungal contamination. Carry out the test for sterility (*2.6.1*), using 10 mL for each medium.

Mycoplasmas (*2.6.7*). Carry out the test for mycoplasmas, using 10 mL for each medium.

Control cells. The control cells of the production cell culture comply with a test for identification and the requirements for extraneous agents (*2.6.16*).

Haemagglutinin antigen. Determine the haemagglutinin antigen content by a suitable immunochemical method (*2.7.1*).

INACTIVATED AND PURIFIED MONOVALENT HARVEST

The harvest, which may be a pool of several single harvests of the same strain, is inactivated and purified by validated methods. Before or after the inactivation process, the monovalent harvest is concentrated and purified by high-speed centrifugation or another suitable method. The influenza virus is inactivated by a method that has been demonstrated on 3 consecutive batches to be consistently effective for the manufacturer. The inactivation process shall have been shown to be capable of inactivating the influenza virus without destroying its antigenicity; the process is designed so as to cause minimum alteration of the haemagglutinin and neuraminidase antigens.

Virus particles are disrupted into component subunits by approved procedures and further purified so that the monovalent bulk consists mainly of haemagglutinin and neuraminidase antigens.

If continuous cell lines are used for production, the purification process shall have been validated to reduce consistently host-cell DNA to a suitable level.

Only an inactivated, purified monovalent harvest that complies with the following requirements may be used in the preparation of the final bulk vaccine.

Haemagglutinin antigen. Determine the haemagglutinin antigen content by a suitable immunochemical method (*2.7.1*).

Antigen/total protein ratio. Determine the haemagglutinin antigen content by a suitable immunodiffusion test. Determine the total protein by a validated method. The ratio of haemagglutinin antigen content to total protein content is within the limits approved for the particular product.

Neuraminidase antigen. The presence and type of neuraminidase antigen are confirmed by suitable enzymatic or immunological methods on the first 3 monovalent harvests from each working seed lot.

Sterility (*2.6.1*). Carry out the test for sterility, using 10 mL for each medium.

Residual infectious virus. Carry out the test described below under Tests.

Purity. The purity of the monovalent harvest is examined by polyacrylamide gel electrophoresis or by other approved techniques. Mainly haemagglutinin and neuraminidase antigens are present.

Chemicals used for disruption and purification. Tests are carried out on the monovalent harvest for the chemicals used for disruption and purification, unless validation of the process has demonstrated total clearance. The concentration must not exceed the limits approved by the competent authority for the particular product.

FINAL BULK VACCINE

Appropriate quantities of the inactivated, purified monovalent pooled harvests are blended to make the final bulk vaccine. An adjuvant may be added.

Only a final bulk vaccine that complies with the following requirements may be used in the preparation of the final lot.

Antimicrobial preservative. Where applicable, determine the amount of antimicrobial preservative by a suitable chemical method. The content is not less than 85 per cent and not greater than 115 per cent of the intended amount.

Sterility (*2.6.1*). Carry out the test for sterility, using 10 mL for each medium.

Residual host-cell DNA. If a continuous cell line is used for virus propagation, the content of residual host-cell DNA, determined using a suitable method, is not greater than 10 ng in the equivalent of a single human dose.

FINAL LOT

The final bulk vaccine is distributed aseptically into sterile, tamper-proof containers. The containers are closed so as to prevent contamination.

Only a final lot that is satisfactory with respect to each of the requirements given below under Tests and Assay may be released for use. Provided that the test for residual infectious virus has been performed with satisfactory results on each inactivated and purified monovalent harvest and that the tests for free formaldehyde, bovine serum albumin and total protein have been performed with satisfactory results on the final bulk vaccine, they may be omitted on the final lot.

If the vaccine contains an adjuvant, suitable tests for identity and other relevant quality criteria are carried out on the final lot. These tests may include chemical and physical analysis, determination of particle size and determination of the number of particles per unit volume.

IDENTIFICATION

The assay serves to confirm the antigenic specificity of the vaccine.

TESTS

Residual infectious virus. Carry out an amplification test for residual infectious influenza virus by inoculating not less than 0.2 mL of the vaccine into cell cultures of the same type as used for production of the vaccine; incubate for not less than 4 days at 37 °C. Inoculate not less than 0.2 mL of the cell culture harvested medium into a new semiconfluent cell culture and incubate as before. At the end of the incubation period, examine for live virus by a haemagglutination test. If haemagglutination is found for any of the fluids, carry out for that fluid a further passage on cell cultures and test for haemagglutination; no haemagglutination occurs.

Antimicrobial preservative. Where applicable, determine the amount of antimicrobial preservative by a suitable chemical method. The content is not less than the minimum amount shown to be effective and is not greater than 115 per cent of the quantity stated on the label.

Free formaldehyde (*2.4.18*): maximum 0.2 g/L, where applicable.

Bovine serum albumin: maximum 50 ng per human dose, determined by a suitable immunochemical method (*2.7.1*).

Total protein: maximum 40 µg of protein other than haemagglutinin per virus strain per human dose.

Sterility (*2.6.1*). It complies with the test for sterility.

Bacterial endotoxins (*2.6.14*): less than 25 IU per human dose.

ASSAY

Determine the content of haemagglutinin antigen by an immunodiffusion test (*2.7.1*), by comparison with a haemagglutinin antigen reference preparation[(3)] or with an antigen preparation calibrated against it. Carry out the test at 20-25 °C. The confidence limits (P = 0.95) are not less than 80 per cent and not more than 125 per cent of the estimated content. The lower confidence limit (P = 0.95) is not less than 80 per cent of the amount stated on the label for each strain.

LABELLING

The label states:

- the biological origin of the cells used for the preparation of the vaccine;

(3) Reference haemagglutinin antigens are available from the National Institute for Biological Standards and Control, Blanche Lane, South Mimms, Potters Bar, Hertfordshire EN6 3QG, Great Britain.

- the strain or strains of influenza virus used to prepare the vaccine;
- the method of inactivation;
- the haemagglutinin antigen content in micrograms per virus strain per dose;
- the season during which the vaccine is intended to protect;
- where applicable, the name and the quantity of adjuvant used.

01/2008:2053

INFLUENZA VACCINE (SURFACE ANTIGEN, INACTIVATED, VIROSOME)

Vaccinum influenzae inactivatum ex corticis antigeniis praeparatum virosomale

DEFINITION

Influenza vaccine (surface antigen, inactivated, virosome) is a sterile, aqueous suspension of a strain or strains of influenza virus, type A or B, or a mixture of strains of the 2 types grown individually in fertilised hens' eggs, inactivated and treated so that the preparation consists predominantly of haemagglutinin and neuraminidase antigens reconstituted to virosomes and without diminishing the antigenic properties of the antigens. The stated amount of haemagglutinin antigen for each strain present in the vaccine is 15 µg per dose, unless clinical evidence supports the use of a different amount.

The vaccine is a slightly opalescent liquid.

PRODUCTION

GENERAL PROVISIONS

The production method is validated to demonstrate that the product, if tested, would comply with the test for abnormal toxicity for immunosera and vaccines for human use (*2.6.9*).

CHOICE OF VACCINE STRAIN

The World Health Organization reviews the world epidemiological situation annually and if necessary recommends the strains that correspond to this epidemiological evidence.

Such strains are used in accordance with the regulations in force in the signatory states of the Convention on the Elaboration of a European Pharmacopoeia. It is now common practice to use reassorted strains giving high yields of the appropriate surface antigens. The origin and passage history of virus strains shall be approved by the competent authority.

SUBSTRATE FOR VIRUS PROPAGATION

Influenza virus seed to be used in the production of vaccine is propagated in fertilised eggs from chicken flocks free from specified pathogens (SPF) (*5.2.2*) or in suitable cell cultures (*5.2.4*), such as chick-embryo fibroblasts or chick kidney cells obtained from SPF chicken flocks (*5.2.2*). For production, the virus of each strain is grown in the allantoic cavity of fertilised hens' eggs from healthy flocks.

VIRUS SEED LOT

The production of vaccine is based on a seed lot system. Working seed lots represent not more than 15 passages from the approved reassorted virus or the approved virus isolate. The final vaccine represents 1 passage from the working seed lot. The haemagglutinin and neuraminidase antigens of each seed lot are identified as originating from the correct strain of influenza virus by suitable methods.

Only a working virus seed lot that complies with the following requirements may be used in the preparation of the monovalent pooled harvest.

Bacterial and fungal contamination. Carry out the test for sterility (*2.6.1*), using 10 mL for each medium.

Mycoplasmas (*2.6.7*). Carry out the test for mycoplasmas, using 10 mL.

VIRUS PROPAGATION AND HARVEST

An antimicrobial agent may be added to the inoculum. After incubation at a controlled temperature, the allantoic fluids are harvested and combined to form a monovalent pooled harvest. An antimicrobial agent may be added at the time of harvest.

MONOVALENT POOLED HARVEST

To limit the possibility of contamination, inactivation is initiated as soon as possible after preparation. The virus is inactivated by a method that has been demonstrated on 3 consecutive batches to be consistently effective for the manufacturer. The inactivation process shall have been shown to be capable of inactivating the influenza virus without destroying its antigenicity; the process is designed so as to cause minimum alteration of the haemagglutinin and neuraminidase antigens. The inactivation process shall also have been shown to be capable of inactivating avian leucosis viruses and mycoplasmas. If the monovalent pooled harvest is stored after inactivation, it is held at a temperature of 5 ± 3 °C. If formaldehyde solution is used, the concentration does not exceed 0.2 g/L of CH_2O at any time during inactivation; if betapropiolactone is used, the concentration does not exceed 0.1 per cent *V/V* at any time during inactivation.

Before or after the inactivation process, the monovalent pooled harvest is concentrated and purified by high-speed centrifugation or another suitable method.

Only a monovalent pooled harvest that complies with the following requirements may be used for the preparation of virosomes.

Provided the tests for haemagglutinin antigen, neuraminidase antigen and residual infectious virus have been carried out with satisfactory results on the monovalent virosomal preparation, they may be omitted on the monovalent pooled harvest when the manufacturing process is continuous between the monovalent pooled harvest and the monovalent virosomal preparation.

Haemagglutinin antigen. Determine the content of haemagglutinin antigen by an immunodiffusion test (*2.7.1*), by comparison with a haemagglutinin antigen reference preparation[(4)] or with an antigen preparation calibrated against it. Carry out the test at 20-25 °C.

Neuraminidase antigen. The presence and type of neuraminidase antigen are confirmed by suitable enzymatic or immunological methods on the first 3 monovalent pooled harvests from each working seed lot.

Residual infectious virus. Carry out the test described under Tests.

PREPARATION OF MONOVALENT VIROSOMES

Virus particles are disrupted into component subunits by approved procedures and further purified so that the monovalent bulk consists mainly of haemagglutinin and neuraminidase antigens. Additional phospholipids may be added and virosomes may be formed by removal of the detergent either by adsorption chromatography or another suitable technique. Several monovalent virosomal preparations may be pooled.

Only a monovalent virosomal preparation that complies with the following requirements may be used in the preparation of the final bulk vaccine.

Haemagglutinin antigen. Determine the content of haemagglutinin antigen by an immunodiffusion test (*2.7.1*), by comparison with a haemagglutinin antigen reference preparation[(4)] or with an antigen preparation calibrated against it. Carry out the test at 20-25 °C.

(4) Reference haemagglutinin antigens are available from the National Institute for Biological Standards and Control, Blanche Lane, South Mimms, Potters Bar, Hertfordshire EN6 3QG, Great Britain.

Vaccines

Neuraminidase antigen. The presence and type of neuraminidase antigen are confirmed by suitable enzymatic or immunological methods on the first 3 virosomal preparations from each working seed lot.

Residual infectious virus. Carry out the test described under Tests. Provided this test has been carried out with satisfactory results on the monovalent pooled harvest, it may be omitted on the preparation of monovalent virosomes.

Sterility (*2.6.1*). Carry out the test for sterility, using 10 mL for each medium.

Purity. The purity of the monovalent virosomal preparation is examined by polyacrylamide gel electrophoresis (*2.2.31*) or by other approved techniques. Mainly haemagglutinin and neuraminidase antigens are present.

Chemicals used for disruption and purification. Tests for the chemicals used for disruption and purification are carried out on the monovalent virosomal preparation, the limits being approved by the competent authority.

Phospholipids. The content and identity of the phospholipids are determined by suitable immunochemical or physico-chemical methods.

Ratio of haemagglutinin to phospholipid. The ratio of haemagglutinin content to phospholipid content is within the limits approved for the particular product.

Virosome size. The average virosome diameter, determined by a suitable method such as photon-correlation spectroscopy, is not less than 100 nm and not greater than 300 nm. The polydispersity index is not greater than 0.4.

FINAL BULK VACCINE

Appropriate quantities of the monovalent virosomal preparations are blended to make the final bulk vaccine. Only a final bulk vaccine that complies with the following requirements may be used in the preparation of the final lot.

Antimicrobial preservative. Where applicable, determine the amount of antimicrobial preservative by a suitable chemical or physico-chemical method. The content is not less than 85 per cent and not greater than 115 per cent of the intended amount.

Sterility (*2.6.1*). Carry out the test for sterility, using 10 mL for each medium.

FINAL LOT

The final bulk vaccine is distributed aseptically into sterile, tamper-proof containers. The containers are closed so as to prevent contamination.

Only a final lot that is satisfactory with respect to each of the requirements given under Tests and Assay may be released for use. Provided that the test for residual infectious virus has been performed with satisfactory results on each monovalent pooled harvest or, where appropriate, on the monovalent virosomal preparations, and that the tests for phospholipids, ratio of haemagglutinin to phospholipid, free formaldehyde, ovalbumin and total protein have been performed with satisfactory results on the final bulk vaccine, they may be omitted on the final lot.

IDENTIFICATION

The assay serves to confirm the antigenic specificity of the vaccine.

TESTS

Residual infectious virus. Inoculate 0.2 mL of the vaccine into the allantoic cavity of each of 10 fertilised eggs and incubate at 33-37 °C for 3 days. The test is not valid unless at least 8 of the 10 embryos survive. Harvest 0.5 mL of the allantoic fluid from each surviving embryo and pool the fluids. Inoculate 0.2 mL of the pooled fluid into a further 10 fertilised eggs and incubate at 33-37 °C for 3 days. The test is not valid unless at least 8 of the 10 embryos survive. Harvest about 0.1 mL of the allantoic fluid from each surviving embryo and examine each individual harvest for live virus by a haemagglutination test. If haemagglutination is found for any of the fluids, carry out for that fluid a further passage in eggs and test for haemagglutination; no haemagglutination occurs.

pH (*2.2.3*): 6.5 to 7.8

Phospholipids. The content and identity of the phospholipids is determined by a suitable immunochemical or physico-chemical method.

Ratio of haemagglutinin to phospholipid. The ratio of haemagglutinin content to phospholipid content is within the limits approved for the particular product.

Antimicrobial preservative. Where applicable, determine the amount of antimicrobial preservative by a suitable chemical or physico-chemical method. The content is not less than the minimum amount shown to be effective and is not greater than 115 per cent of the quantity stated on the label.

Free formaldehyde (*2.4.18*): maximum 0.2 g/L, where applicable.

Ovalbumin. Not more than the quantity stated on the label and in any case not more than 1 µg per human dose, determined by a suitable immunochemical method (*2.7.1*) using a suitable reference preparation of ovalbumin.

Total protein. Not more than 40 µg of protein other than haemagglutinin per virus strain per human dose, and not more than a total of 120 µg of protein other than hemagglutinin per human dose.

Sterility (*2.6.1*). It complies with the test for sterility.

Virosome size. The average virosome diameter, determined by a suitable method such as photon-correlation spectroscopy, is not less than 100 nm and not greater than 300 nm. The polydispersity index is not greater than 0.4.

Bacterial endotoxins (*2.6.14*): less than 100 IU per human dose.

ASSAY

Determine the content of haemagglutinin antigen by an immunodiffusion test (*2.7.1*), by comparison with a haemagglutinin antigen reference preparation[4] or with an antigen preparation calibrated against it. Carry out the test at 20-25 °C. The confidence limits (P = 0.95) are not less than 80 per cent and not more than 125 per cent of the estimated haemagglutinin antigen content. The lower confidence limit (P = 0.95) is not less than 80 per cent of the amount stated on the label for each strain.

LABELLING

The label states:

- that the vaccine has been prepared on eggs;
- the strain or strains of influenza virus used to prepare the vaccine;
- the method of inactivation;
- the haemagglutinin content, in micrograms per virus strain per dose;
- the maximum amount of ovalbumin;
- the season during which the vaccine is intended to protect.

01/2008:0159

INFLUENZA VACCINE (WHOLE VIRION, INACTIVATED)

Vaccinum influenzae inactivatum ex viris integris praeparatum

DEFINITION

Influenza vaccine (whole virion, inactivated) is a sterile, aqueous suspension of a strain or strains of influenza virus, type A or B, or a mixture of strains of the 2 types grown

individually in fertilised hens' eggs and inactivated in such a manner that their antigenic properties are retained. The stated amount of haemagglutinin antigen for each strain present in the vaccine is 15 µg per dose, unless clinical evidence supports the use of a different amount.

The vaccine is a slightly opalescent liquid.

PRODUCTION

The production method is validated to demonstrate that the product, if tested, would comply with the test for abnormal toxicity for immunosera and vaccines for human use (*2.6.9*).

CHOICE OF VACCINE STRAIN

The World Health Organization reviews the world epidemiological situation annually and if necessary recommends the strains that correspond to this epidemiological evidence.

Such strains are used in accordance with the regulations in force in the signatory States of the Convention on the Elaboration of a European Pharmacopoeia. It is now common practice to use reassorted strains giving high yields of the appropriate surface antigens. The origin and passage history of virus strains shall be approved by the competent authority.

SUBSTRATE FOR VIRUS PROPAGATION

Influenza virus seed to be used in the production of vaccine is propagated in fertilised eggs from chicken flocks free from specified pathogens (SPF) (*5.2.2*) or in suitable cell cultures (*5.2.4*), such as chick-embryo fibroblasts or chick kidney cells obtained from SPF chicken flocks (*5.2.2*). For production, the virus of each strain is grown in the allantoic cavity of fertilised hens' eggs from healthy flocks.

VIRUS SEED LOT

The production of vaccine is based on a seed-lot system. Working seed lots represent not more than 15 passages from the approved reassorted virus or the approved virus isolate. The final vaccine represents 1 passage from the working seed lot. The haemagglutinin and neuraminidase antigens of each seed lot are identified as originating from the correct strain of influenza virus by suitable methods.

Only a working virus seed lot that complies with the following requirements may be used in the preparation of the monovalent pooled harvest.

Bacterial and fungal contamination. Carry out the test for sterility (*2.6.1*), using 10 mL for each medium.

Mycoplasmas (*2.6.7*). Carry out the test for mycoplasmas, using 10 mL.

VIRUS PROPAGATION AND HARVEST

An antimicrobial agent may be added to the inoculum. After incubation at a controlled temperature, the allantoic fluids are harvested and combined to form a monovalent pooled harvest. An antimicrobial agent may be added at the time of harvest. At no stage in the production is penicillin or streptomycin used.

MONOVALENT POOLED HARVEST

To limit the possibility of contamination, inactivation is initiated as soon as possible after preparation. The virus is inactivated by a method that has been demonstrated on 3 consecutive batches to be consistently effective for the manufacturer. The inactivation process shall have been shown to be capable of inactivating the influenza virus without destroying its antigenicity; the process should cause minimum alteration of the haemagglutinin and neuraminidase antigens. The inactivation process shall also have been shown to be capable of inactivating avian leucosis viruses and mycoplasmas. If the monovalent pooled harvest is stored after inactivation, it is held at 5 ± 3 °C. If formaldehyde solution is used, the concentration does not exceed 0.2 g/L of CH_2O at any time during inactivation; if betapropiolactone is used, the concentration does not exceed 0.1 per cent *V/V* at any time during inactivation.

Before or after the inactivation process, the monovalent pooled harvest is concentrated and purified by high-speed centrifugation or other suitable method.

Only a monovalent pooled harvest that complies with the following requirements may be used in the preparation of the final bulk vaccine.

Haemagglutinin antigen. Determine the content of haemagglutinin antigen by an immunodiffusion test (*2.7.1*), by comparison with a haemagglutinin antigen reference preparation or with an antigen preparation calibrated against it[(5)]. Carry out the test at 20-25 °C.

Neuraminidase antigen. The presence and type of neuraminidase antigen are confirmed by suitable enzymatic or immunological methods on the first 3 monovalent pooled harvests from each working seed lot.

Sterility (*2.6.1*). Carry out the test for sterility, using 10 mL for each medium.

Residual infectious virus. Carry out the test described below under Tests.

FINAL BULK VACCINE

Appropriate quantities of the monovalent pooled harvests are blended to make the final bulk vaccine.

Only a final bulk vaccine that complies with the following requirements may be used in the preparation of the final lot.

Antimicrobial preservative. Where applicable, determine the amount of antimicrobial preservative by a suitable chemical method. The content is not less than 85 per cent and not greater than 115 per cent of the intended amount.

Sterility (*2.6.1*). Carry out the test for sterility using 10 mL for each medium.

FINAL LOT

The final bulk vaccine is distributed aseptically into sterile, tamper-proof containers. The containers are closed so as to prevent contamination.

Only a final lot that is satisfactory with respect to each of the requirements given below under Tests and Assay may be released for use. Provided that the test for residual infectious virus has been performed with satisfactory results on each monovalent pooled harvest and that the tests for free formaldehyde, ovalbumin and total protein have been performed with satisfactory results on the final bulk vaccine, they may be omitted on the final lot.

IDENTIFICATION

The assay serves to confirm the antigenic specificity of the vaccine.

TESTS

Residual infectious virus. Inoculate 0.2 mL of the vaccine into the allantoic cavity of each of 10 fertilised eggs and incubate at 33-37 °C for 3 days. The test is not valid unless at least 8 of the 10 embryos survive. Harvest 0.5 mL of the allantoic fluid from each surviving embryo and pool the fluids. Inoculate 0.2 mL of the pooled fluid into a further 10 fertilised eggs and incubate at 33-37 °C for 3 days. The test is not valid unless at least 8 of the 10 embryos survive. Harvest about 0.1 mL of the allantoic fluid from each surviving embryo and examine each individual harvest for live virus by a haemagglutination test. If haemagglutination is found for any of the fluids, carry out for that fluid a further passage in eggs and test for haemagglutination; no haemagglutination occurs.

(5) Reference haemagglutinin antigens are available from the National Institute for Biological Standards and Control, Blanche Lane, South Mimms, Potters Bar, Hertfordshire EN6 3QG, Great Britain.

Antimicrobial preservative. Where applicable, determine the amount of antimicrobial preservative by a suitable chemical method. The content is not less than the minimum amount shown to be effective and is not greater than 115 per cent of the quantity stated on the label.

Free formaldehyde (*2.4.18*): maximum 0.2 g/L, where applicable.

Ovalbumin. Not more than the quantity stated on the label and in any case not more than 1 µg per human dose, determined by a suitable immunochemical method (*2.7.1*) using a suitable reference preparation of ovalbumin.

Total protein. Not more than 6 times the total haemagglutinin content of the vaccine as determined in the assay, but in any case, not more than 100 µg of protein per virus strain per human dose and not more than a total of 300 µg of protein per human dose.

Sterility (*2.6.1*). It complies with the test for sterility.

Bacterial endotoxins (*2.6.14*): less than 100 IU per human dose.

ASSAY

Determine the content of haemagglutinin antigen by an immunodiffusion test (*2.7.1*), by comparison with a haemagglutinin antigen reference preparation or with an antigen preparation calibrated against it[(5)]. Carry out the test at 20-25 °C. The confidence limits (P = 0.95) are not less than 80 per cent and not more than 125 per cent of the estimated haemagglutinin antigen content. The lower confidence limit (P = 0.95) is not less than 80 per cent of the amount stated on the label for each strain.

LABELLING

The label states:

- that the vaccine has been prepared on eggs,
- the strain or strains of influenza virus used to prepare the vaccine,
- the method of inactivation,
- the haemagglutinin content in micrograms per virus strain per dose,
- the maximum amount of ovalbumin,
- the season during which the vaccine is intended to protect.

04/2009:2308
corrected 6.7

INFLUENZA VACCINE (WHOLE VIRION, INACTIVATED, PREPARED IN CELL CULTURES)

Vaccinum influenzae inactivatum ex cellulis virisque integris praeparatum

DEFINITION

Influenza vaccine (whole virion, inactivated, prepared in cell cultures) is a sterile, aqueous suspension of a strain or strains of influenza virus, type A or B, or a mixture of strains of the 2 types grown individually in cell cultures and inactivated in such a manner that their antigenic properties are retained. The stated amount of haemagglutinin antigen for each strain present in the vaccine is 15 µg per dose, unless clinical evidence supports the use of a different amount. The vaccine is a slightly opalescent or opalescent liquid. The vaccine may contain an adjuvant. This monograph applies to vaccines produced in diploid or continuous cell lines of mammalian origin.

PRODUCTION

GENERAL PROVISIONS

Production of the vaccine is based on a virus seed-lot system and a cell-bank system. The production method shall have been shown to yield consistently vaccines that comply with the requirements for immunogenicity, safety and stability.

The production method is validated to demonstrate that the product, if tested, would comply with the test for abnormal toxicity for immunosera and vaccines for human use (*2.6.9*).

The production method is validated to demonstrate suitable reduction of residual host-cell protein. With the agreement of the competent authority and for each specific product, routine testing for residual host-cell proteins may be omitted based on the results of validation studies for the product. Guidance on the principles of such validation studies is given, for example, in the monograph *Products of recombinant DNA technology (0784)*, in particular in the sections 'Validation of the production process - Extraction and purification' and 'Production consistency - Host-cell-derived proteins'.

CHOICE OF VACCINE STRAIN

The World Health Organization reviews the world epidemiological situation annually and if necessary recommends new strains corresponding to this epidemiological evidence.

Such strains are used in accordance with the regulations in force in the signatory states of the Convention on the Elaboration of a European Pharmacopoeia. It is now common practice to use reassorted strains giving high yields of the appropriate surface antigens. The origin and passage history of virus strains shall be approved by the competent authority.

SUBSTRATE FOR VIRUS PROPAGATION

Influenza virus used in the preparation of seed lots is propagated in fertilised eggs from chicken flocks free from specified pathogens (SPF) (*5.2.2*) or in suitable cell cultures (*5.2.3*), such as chick-embryo fibroblasts, chick kidney cells obtained from SPF chicken flocks (*5.2.2*), or a diploid or continuous cell line. The final passage for establishment of the working seed lot is prepared in the cell line used for routine production. For this production, the virus of each strain is propagated in a diploid or continuous cell line (*5.2.3*).

VIRUS SEED LOT

The production of vaccine is based on a seed-lot system. Each of the strains of influenza virus used shall be identified by historical records that include information on the origin of the strain and its subsequent manipulation. Working seed lots represent not more than 15 passages from the approved reassorted virus or the approved virus isolate. The final vaccine represents 1 passage from the working seed lot.

Only a seed lot that complies with the following requirements may be used for virus propagation.

Identification. The haemagglutinin and neuraminidase antigens of each master and working seed lot are identified as originating from the correct strain of influenza virus by suitable methods.

Virus concentration. The virus concentration of each working seed lot is determined. Where applicable, the virus concentration of each master seed lot is determined.

Extraneous agents (*2.6.16*). The working seed lots comply with the requirements for seed lots. It is recognised that due to a seasonal change in one or more of the influenza vaccine strains, timely testing of a virus seed for extraneous agents according to general chapter *2.6.16* may be problematic (e.g. duration of *in vivo* tests, timely availability of specific neutralising antisera). In agreement with the competent authority, and in light of a risk assessment, rapid assays (e.g. multiplex PCR) may be applied as alternatives to general chapter *2.6.16* following validation.

Such risk assessment and validation includes more general considerations on potential contaminants of the virus isolates,

the susceptibility of the cell substrate to such viruses and the capacity of the production process for viral removal or inactivation; validation includes also comparative data on testing of seeds according to general chapter *2.6.16* and the proposed rapid assays. Each applied PCR/NAT test (*2.6.21*) must be shown to be suitable for its intended use by appropriate analytical validation. The risk assessment is reviewed when new information becomes available on potential viral contaminants, and the justification of the chosen PCR panel of extraneous agents tested for is provided to the competent authority within the annual update. This update also includes vaccine strain-specific aspects such as specific PCR inhibitory effects.

If an agent is detected in a virus seed and the mammalian cells used for production are shown to be susceptible to this agent, the virus seed is not used for vaccine production.

If an agent is detected in a virus seed and the mammalian cells are not susceptible to the agent, validation of the production process to demonstrate removal or inactivation of the agent is carried out. If removal or inactivation cannot be demonstrated, the inactivated monovalent harvest is tested to demonstrate absence of any contaminant identified in the virus seed.

PROPAGATION AND SINGLE HARVEST

All processing of the cell bank and subsequent cell cultures is done under aseptic conditions in an area where no other cells are being handled at the same time. Approved animal serum (but not human serum) may be used in the cell culture media. Serum and trypsin used in the preparation of cell suspensions or media are shown to be free from extraneous agents. The cell culture media may contain a pH indicator, such as phenol red, and antibiotics at the lowest effective concentration. A sufficient quantity of the cell cultures employed for vaccine production are set aside as uninfected cell cultures (control cells).

Only a single harvest that complies with the following requirements may be used in the preparation of the vaccine.

Identification. The test for antigen content also serves to identify the single harvest.

Bacterial and fungal contamination. Carry out the test for sterility (*2.6.1*), using 10 mL for each medium.

Mycoplasmas (*2.6.7*). Carry out the test for mycoplasmas, using 10 mL for each medium.

Control cells. The control cells of the production cell culture comply with a test for identification and the requirements for extraneous agents (*2.6.16*).

Haemagglutinin antigen. Determine the haemagglutinin antigen content by a suitable immunochemical method (*2.7.1*).

INACTIVATED AND PURIFIED MONOVALENT HARVEST

The harvest, which may be a pool of several single harvests of the same strain, is inactivated and purified by validated methods. Before or after the inactivation process, the monovalent harvest is concentrated and purified by high-speed centrifugation or another suitable method. The influenza virus is inactivated by a method that has been demonstrated on 3 consecutive batches to be consistently effective for the manufacturer. The inactivation process shall have been shown to be capable of inactivating the influenza virus without destroying its antigenicity; the process is designed so as to cause minimum alteration of the haemagglutinin and neuraminidase antigens.

If continuous cell lines are used for production, the purification process shall have been validated to reduce consistently host-cell DNA to a suitable level.

Only an inactivated, purified monovalent harvest that complies with the following requirements may be used in the preparation of the final bulk vaccine.

Haemagglutinin antigen. Determine the haemagglutinin antigen content by a suitable immunochemical method (*2.7.1*).

Antigen/total protein ratio. Determine the haemagglutinin antigen content by a suitable immunodiffusion test. Determine the total protein by a validated method. The ratio of haemagglutinin antigen content to total protein content is within the limits approved for the particular product.

Neuraminidase antigen. The presence and type of neuraminidase antigen are confirmed by suitable enzymatic or immunological methods on the first 3 monovalent harvests from each working seed lot.

Sterility (*2.6.1*). Carry out the test for sterility, using 10 mL for each medium.

Residual infectious virus. Carry out the test described below under Tests.

FINAL BULK VACCINE

Appropriate quantities of the inactivated, purified monovalent pooled harvests are blended to make the final bulk vaccine. An adjuvant may be added.

Only a final bulk vaccine that complies with the following requirements may be used in the preparation of the final lot.

Antimicrobial preservative. Where applicable, determine the amount of antimicrobial preservative by a suitable chemical method. The content is not less than 85 per cent and not greater than 115 per cent of the intended amount.

Sterility (*2.6.1*). Carry out the test for sterility, using 10 mL for each medium.

Residual host-cell DNA. If a continuous cell line is used for virus propagation, the content of residual host-cell DNA, determined using a suitable method, is not greater than 10 ng in the equivalent of a single human dose.

FINAL LOT

The final bulk vaccine is distributed aseptically into sterile, tamper-proof containers. The containers are closed so as to prevent contamination.

Only a final lot that is satisfactory with respect to each of the requirements given below under Tests and Assay may be released for use. Provided that the test for residual infectious virus has been performed with satisfactory results on each inactivated and purified monovalent harvest and that the tests for free formaldehyde, bovine serum albumin and total protein have been performed with satisfactory results on the final bulk vaccine, they may be omitted on the final lot.

If the vaccine contains an adjuvant, suitable tests for identity and other relevant quality criteria are carried out on the final lot. These tests may include chemical and physical analysis, determination of particle size and determination of the number of particles per unit volume.

IDENTIFICATION

The assay serves to confirm the antigenic specificity of the vaccine.

TESTS

Residual infectious virus. Carry out an amplification test for residual infectious influenza virus by inoculating not less than 4 mL of the vaccine into cell cultures of the same type as used for production of the vaccine; incubate for not less than 7 days at 32 ± 2 °C. Inoculate not less than 10 mL of the cell culture harvested medium into a new semi-confluent cell culture and incubate as before. At the end of the incubation period, examine for live virus by a haemagglutination test. If haemagglutination is found for any of the fluids, carry out for that fluid a further passage on cell cultures and test for haemagglutination; no haemagglutination occurs.

Antimicrobial preservative. Where applicable, determine the amount of antimicrobial preservative by a suitable chemical method. The content is not less than the minimum amount shown to be effective and is not greater than 115 per cent of the quantity stated on the label.

Free formaldehyde (*2.4.18*): maximum 0.2 g/L, where applicable.

Bovine serum albumin: maximum 50 ng per human dose, determined by a suitable immunochemical method (*2.7.1*).

Total protein. Not more than 6 times the total haemagglutinin content of the vaccine as determined in the assay, but in any case, not more than 100 µg of protein per virus strain per human dose.

Sterility (*2.6.1*). It complies with the test for sterility.

Bacterial endotoxins (*2.6.14*): less than 25 IU per human dose.

ASSAY

Determine the content of haemagglutinin antigen by an immunodiffusion test (*2.7.1*), by comparison with a haemagglutinin antigen reference preparation[(6)] or with an antigen preparation calibrated against it. Carry out the test at 20-25 °C. The confidence limits (P = 0.95) are not less than 80 per cent and not more than 125 per cent of the estimated content. The lower confidence limit (P = 0.95) is not less than 80 per cent of the amount stated on the label for each strain.

LABELLING

The label states:

- the biological origin of the cells used for the preparation of the vaccine;
- the strain or strains of influenza virus used to prepare the vaccine;
- the method of inactivation;
- the haemagglutinin antigen content in micrograms per virus strain per dose;
- the season during which the vaccine is intended to protect;
- where applicable, the name and the quantity of adjuvant used.

04/2010:1057

MEASLES, MUMPS AND RUBELLA VACCINE (LIVE)

Vaccinum morbillorum, parotitidis et rubellae vivum

DEFINITION

Measles, mumps and rubella vaccine (live) is a freeze-dried preparation of suitable attenuated strains of measles virus, mumps virus and rubella virus.

The vaccine is reconstituted immediately before use, as stated on the label, to give a clear liquid that may be coloured owing to the presence of a pH indicator.

PRODUCTION

The 3 components are prepared as described in the monographs *Measles vaccine (live) (0213)*, *Mumps vaccine (live) (0538)* and *Rubella vaccine (live) (0162)* and comply with the requirements prescribed therein.

The production method is validated to demonstrate that the product, if tested, would comply with the test for abnormal toxicity for immunosera and vaccines for human use (*2.6.9*).

FINAL BULK VACCINE

Virus harvests for each component are pooled and clarified to remove cells. A suitable stabiliser may be added and the pooled harvests diluted as appropriate. Suitable quantities of the pooled harvest for each component are mixed.

Only a final bulk vaccine that complies with the following requirement may be used in the preparation of the final lot.

Bacterial and fungal contamination. Carry out the test for sterility (*2.6.1*), using 10 mL for each medium.

FINAL LOT

For each component, a minimum virus concentration for release of the product is established such as to ensure, in light of stability data, that the minimum concentration stated on the label will be present at the end of the period of validity.

Only a final lot that complies with the requirements for minimum virus concentration of each component for release, with the following requirement for thermal stability and with each of the requirements given below under Identification and Tests may be released for use. Provided that the tests for bovine serum albumin and, where applicable, for ovalbumin have been carried out with satisfactory results on the final bulk vaccine, they may be omitted on the final lot.

Thermal stability. Maintain at least 3 vials of the final lot of freeze-dried vaccine in the dry state at 37 ± 1 °C for 7 days. Determine the virus concentration as described under Assay in parallel for the heated vaccine and for vaccine stored at the temperature recommended for storage. For each component, the virus concentration of the heated vaccine is not more than 1.0 $\log_{10}$ lower than that of the unheated vaccine.

IDENTIFICATION

When the vaccine reconstituted as stated on the label is mixed with antibodies specific for measles virus, mumps virus and rubella virus, it is no longer able to infect cell cultures susceptible to these viruses. When the vaccine reconstituted as stated on the label is mixed with quantities of specific antibodies sufficient to neutralise any 2 viral components, the 3rd viral component infects susceptible cell cultures.

TESTS

Bacterial and fungal contamination. The reconstituted vaccine complies with the test for sterility (*2.6.1*).

Bovine serum albumin. Not more than 50 ng per single human dose, determined by a suitable immunochemical method (*2.7.1*).

Ovalbumin. If the mumps component is produced in chick embryos, the vaccine contains not more than 1 µg of ovalbumin per single human dose, determined by a suitable immunochemical method (*2.7.1*).

Water (*2.5.12*). Not more than 3.0 per cent, determined by the semi-micro determination of water.

ASSAY

The cell lines and/or neutralising antisera are chosen to ensure that each component is assayed without interference from the other 2 components.

Titrate the vaccine for infective measles, mumps and rubella virus, using at least 3 separate vials of vaccine and inoculating a suitable number of wells for each dilution step. Titrate 1 vial of the appropriate virus reference preparation in triplicate to validate each assay. The virus concentration of the reference preparation is monitored using a control chart and a titre is established on a historical basis by each laboratory. The relation with the appropriate European Pharmacopoeia Biological Reference Preparation is established and monitored at regular intervals if a manufacturer's reference preparation is used. Calculate the individual virus concentration for each vial of vaccine and for each replicate of the reference preparation as well as the corresponding combined virus concentrations, using the usual statistical methods (for example, *5.3*).

The combined estimates of the measles, mumps and rubella virus concentrations for the 3 vials of vaccine are not less than that stated on the label; the minimum measles virus concentration stated on the label is not less than 3.0 $\log_{10}$ $CCID_{50}$ per single human dose; the minimum

(6) Reference haemagglutinin antigens are available from the National Institute for Biological Standards and Control, Blanche Lane, South Mimms, Potters Bar, Hertfordshire EN6 3QG, Great Britain.

mumps virus concentration stated on the label is not less than 3.7 $\log_{10}$ $CCID_{50}$ per single human dose; the minimum rubella virus concentration stated on the label is not less than 3.0 $\log_{10}$ $CCID_{50}$ per single human dose.

The assay is not valid if:

- the confidence interval (P = 0.95) of the estimated virus concentration of the reference preparation for the 3 replicates combined is greater than ± 0.3 $\log_{10}$ $CCID_{50}$;
- the virus concentration of the reference preparation differs by more than 0.5 $\log_{10}$ $CCID_{50}$ from the established value.

The assay is repeated if the confidence interval (P = 0.95) of the combined virus concentration of the vaccine is greater than ± 0.3 $\log_{10}$ $CCID_{50}$; data obtained from valid assays only are combined by the usual statistical methods (for example, *5.3*) to calculate the virus concentration of the sample. The confidence interval (P = 0.95) of the combined virus concentration is not greater than ± 0.3 $\log_{10}$ $CCID_{50}$.

Measles vaccine (live) BRP is suitable for use as a reference preparation.

Mumps vaccine (live) BRP is suitable for use as a reference preparation.

Rubella vaccine (live) BRP is suitable for use as a reference preparation.

Where justified and authorised, different assay designs may be used; this may imply the application of different validity and acceptance criteria. However, the vaccine must comply if tested as described above.

LABELLING

The label states:

- the strains of virus used in the preparation of the vaccine;
- where applicable, that chick embryos have been used for the preparation of the vaccine;
- the type and origin of the cells used for the preparation of the vaccine;
- the minimum virus concentration for each component of the vaccine;
- that contact between the vaccine and disinfectants is to be avoided.

01/2012:2442

MEASLES, MUMPS, RUBELLA AND VARICELLA VACCINE (LIVE)

Vaccinum morbillorum, parotitidis, rubellae et varicellae vivum

DEFINITION

Measles, mumps, rubella and varicella vaccine (live) is a freeze-dried preparation of suitable attenuated strains of measles virus, mumps virus, rubella virus and human herpesvirus 3. The vaccine is reconstituted immediately before use, as stated on the label, to give a clear liquid that may be coloured owing to the presence of a pH indicator.

PRODUCTION

The 4 components are prepared as described in the monographs *Measles vaccine (live) (0213)*, *Mumps vaccine (live) (0538)*, *Rubella vaccine (live) (0162)* and *Varicella vaccine (live) (0648)* and comply with the requirements prescribed therein.

The production method is validated to demonstrate that the product, if tested, would comply with the test for abnormal toxicity for immunosera and vaccines for human use (*2.6.9*).

FINAL BULK VACCINE

Virus harvests for each component are pooled and clarified to remove cells. A suitable stabiliser may be added and for each component the pooled harvests diluted as appropriate. Suitable quantities of the pooled harvest for each component are mixed.

Only a final bulk vaccine that complies with the following requirement may be used in the preparation of the final lot.

Bacterial and fungal contamination. Carry out the test for sterility (*2.6.1*), using 10 mL for each medium.

FINAL LOT

For each component, a minimum virus concentration for release of the product is established such as to ensure, in light of stability data, that the minimum concentration stated on the label will be present at the end of the period of validity. The final bulk vaccine is distributed aseptically into sterile, tamper-proof containers and freeze-dried to a moisture content shown to be favourable to the stability of the vaccine. The containers are then closed so as to prevent contamination and the introduction of moisture.

Only a final lot that complies with the requirements for minimum virus concentration of each component for release, with the following requirements for thermal stability, bovine serum albumin and water, and with each of the requirements given under Identification and Tests may be released for use. Provided that the test for bovine serum albumin has been carried out with satisfactory results on the final bulk vaccine, it may be omitted on the final lot.

Thermal stability. For the measles, mumps and rubella components maintain at least 3 containers of the final lot of freeze-dried vaccine in the dry state at 37 ± 1 °C for 7 days. Determine the virus concentration as described under Assay in parallel for the heated vaccine and for vaccine stored at the temperature recommended for storage. For each component, the virus concentration of the heated vaccine is not more than 1.0 $\log_{10}$ lower than that of the unheated vaccine.

Bovine serum albumin. Not more than the amount approved by the competent authority, determined by a suitable immunochemical method (*2.7.1*).

Water (*2.5.12*). Not more than the amount shown to ensure stability of the vaccines as approved by the competent authority, determined by the semi-micro determination of water.

IDENTIFICATION

When the vaccine reconstituted as stated on the label is mixed with antibodies specific for measles virus, mumps virus, rubella virus and human herpesvirus 3, it is no longer able to infect cell cultures susceptible to these viruses. When the vaccine reconstituted as stated on the label is mixed with quantities of specific antibodies sufficient to neutralise any 3 viral components, the 4th viral component infects susceptible cell cultures.

TESTS

Bacterial and fungal contamination. The reconstituted vaccine complies with the test for sterility (*2.6.1*).

ASSAY

The cell lines and/or neutralising antisera are chosen to ensure that each component is assayed without interference from the other 3 components.

Titrate the vaccine for infective measles virus, mumps virus, rubella virus and human herpesvirus 3 using at least 3 separate containers of vaccine and inoculating a suitable number of wells for each dilution step. Titrate 1 container of the appropriate virus reference preparation in triplicate to validate each assay. The virus concentration of the reference preparation is monitored using a control chart and a titre is established on a historical basis by each laboratory. Unless otherwise justified and authorised, for the measles, mumps,

Vaccines

rubella and human herpesvirus 3 viruses the relation with the appropriate European Pharmacopoeia Biological Reference Preparation is established and monitored at regular intervals if a manufacturer's reference preparation is used. Calculate the individual virus concentration for each container of vaccine and for each replicate of the reference preparation as well as the corresponding combined virus concentrations, using the usual statistical methods (for example, *5.3*).

The combined estimates of the measles virus, mumps virus, rubella virus and human herpesvirus 3 concentrations for the 3 containers of vaccine are not less than that stated on the label; the minimum measles virus concentration stated on the label is not less than 3.0 $\log_{10}$ $CCID_{50}$ per single human dose; the minimum mumps virus concentration stated on the label is not less than 3.7 $\log_{10}$ $CCID_{50}$ per single human dose; the minimum rubella virus concentration stated on the label is not less than 3.0 $\log_{10}$ $CCID_{50}$ per single human dose.

The assay is not valid if:

- the confidence interval (P = 0.95) of the estimated virus concentration of the reference preparation for the 3 replicates combined is greater than ± 0.3 $\log_{10}$ $CCID_{50}$ (measles virus, mumps virus and rubella virus) or ± 0.3 $\log_{10}$ PFU (human herpesvirus 3);
- the virus concentration of the reference preparation differs by more than 0.5 $\log_{10}$ $CCID_{50}$ (measles virus, mumps virus and rubella virus) or 0.5 $\log_{10}$ PFU (human herpesvirus 3) from the established value.

The assay is repeated if the confidence interval (P = 0.95) of the combined virus concentration of the vaccine is greater than ± 0.3 $\log_{10}$ $CCID_{50}$ (measles virus, mumps virus and rubella virus) or ± 0.3 $\log_{10}$ PFU (human herpesvirus 3); data obtained from valid assays only are combined by using the usual statistical methods (for example, *5.3*) to calculate the virus concentration of the sample. The confidence interval (P = 0.95) of the combined virus concentration is not greater than ± 0.3 $\log_{10}$ $CCID_{50}$ (measles virus, mumps virus and rubella virus) or ± 0.3 $\log_{10}$ PFU (human herpesvirus 3).

Measles vaccine (live) BRP is suitable for use as a reference preparation.

Mumps vaccine (live) BRP is suitable for use as a reference preparation.

Rubella vaccine (live) BRP is suitable for use as a reference preparation.

Varicella vaccine (live) BRP is suitable for use as a reference preparation.

Where justified and authorised, different assay designs may be used; this may imply the application of different validity and acceptance criteria. However, the vaccine must comply if tested as described above.

LABELLING

The label states:

- the strains of virus used in the preparation of the vaccine;
- the type and origin of the cells used for the preparation of the vaccine;
- the minimum virus concentration for each component of the vaccine;
- that contact between the vaccine and disinfectants is to be avoided.

04/2008:0213

MEASLES VACCINE (LIVE)

Vaccinum morbillorum vivum

DEFINITION

Measles vaccine (live) is a freeze-dried preparation of a suitable attenuated strain of measles virus. The vaccine is reconstituted immediately before use, as stated on the label, to give a clear liquid that may be coloured owing to the presence of a pH indicator.

PRODUCTION

The production of vaccine is based on a virus seed-lot system and, if the virus is propagated in human diploid cells, a cell-bank system. The production method shall have been shown to yield consistently live measles vaccines of adequate immunogenicity and safety in man. Unless otherwise justified and authorised, the virus in the final vaccine shall have undergone no more passages from the master seed lot than were used to prepare the vaccine shown in clinical studies to be satisfactory with respect to safety and efficacy; even with authorised exceptions, the number of passages beyond the level used for clinical studies shall not exceed 5.

The potential neurovirulence of the vaccine strain is considered during preclinical development, based on available epidemiological data on neurovirulence and neurotropism, primarily for the wild-type virus. In light of this, a risk analysis is carried out. Where necessary and if available, a test is carried out on the vaccine strain using an animal model that differentiates wild-type and attenuated virus; tests on strains of intermediate attenuation may also be needed.

The production method is validated to demonstrate that the product, if tested, would comply with the test for abnormal toxicity for immunosera and vaccines for human use (*2.6.9*).

SUBSTRATE FOR VIRUS PROPAGATION

The virus is propagated in human diploid cells (*5.2.3*) or in cultures of chick-embryo cells derived from a chicken flock free from specified pathogens (*5.2.2*).

SEED LOT

The strain of measles virus used shall be identified by historical records that include information on the origin of the strain and its subsequent manipulation. Virus seed lots are prepared in large quantities and stored at temperatures below − 20 °C if freeze-dried, or below − 60 °C if not freeze-dried.

Only a seed lot that complies with the following requirements may be used for virus propagation.

Identification. The master and working seed lots are identified as measles virus by serum neutralisation in cell culture, using specific antibodies.

Virus concentration. The virus concentration of the master and working seed lots is determined to monitor consistency of production.

Extraneous agents (*2.6.16*). The working seed lot complies with the requirements for seed lots.

PROPAGATION AND HARVEST

All processing of the cell bank and subsequent cell cultures is done under aseptic conditions in an area where no other cells are handled during production. Suitable animal (but not human) serum may be used in the growth medium, but the final medium for maintaining cells during virus multiplication does not contain animal serum. Serum and trypsin used in the preparation of cell suspensions and culture media are shown to be free from extraneous agents. The cell culture medium may contain a pH indicator such as phenol red and suitable antibiotics at the lowest effective concentration. It is preferable to have a substrate free from antibiotics during production. Not less than 500 mL of the production cell

cultures is set aside as uninfected cell cultures (control cells). The viral suspensions are harvested at a time appropriate to the strain of virus being used.

Only a single harvest that complies with the following requirements may be used in the preparation of the final bulk vaccine.

Identification. The single harvest contains virus that is identified as measles virus by serum neutralisation in cell culture, using specific antibodies.

Virus concentration. The virus concentration in the single harvest is determined as prescribed under Assay to monitor consistency of production and to determine the dilution to be used for the final bulk vaccine.

Extraneous agents (*2.6.16*). The single harvest complies with the tests for extraneous agents.

Control cells. If human diploid cells are used for production, the control cells comply with a test for identification. They comply with the tests for extraneous agents (*2.6.16*).

FINAL BULK VACCINE

Virus harvests that comply with the above tests are pooled and clarified to remove cells. A suitable stabiliser may be added and the pooled harvests diluted as appropriate.

Only a final bulk vaccine that complies with the following requirement may be used in the preparation of the final lot.

Bacterial and fungal contamination. The final bulk vaccine complies with the test for sterility (*2.6.1*), carried out using 10 mL for each medium.

FINAL LOT

A minimum virus concentration for release of the product is established such as to ensure, in light of stability data, that the minimum concentration stated on the label will be present at the end of the period of validity.

Only a final lot that complies with the requirements for minimum virus concentration for release, with the following requirement for thermal stability and with each of the requirements given below under Identification and Tests may be released for use. Provided that the test for bovine serum albumin has been carried out with satisfactory results on the final bulk vaccine, it may be omitted on the final lot.

Thermal stability. Maintain at least 3 vials of the final lot of freeze-dried vaccine in the dry state at 37 ± 1 °C for 7 days. Determine the virus concentration as described under Assay in parallel for the heated vaccine and for vaccine stored at the temperature recommended for storage. The virus concentration of the heated vaccine is not more than 1.0 $\log_{10}$ lower than that of the unheated vaccine.

IDENTIFICATION

When the vaccine reconstituted as stated on the label is mixed with specific measles antibodies, it is no longer able to infect susceptible cell cultures.

TESTS

Bacterial and fungal contamination. The reconstituted vaccine complies with the test for sterility (*2.6.1*).

Bovine serum albumin. Not more than 50 ng per single human dose, determined by a suitable immunochemical method (*2.7.1*).

Water (*2.5.12*). Not more than 3.0 per cent, determined by the semi-micro determination of water.

ASSAY

Titrate the vaccine for infective virus, using at least 3 separate vials of vaccine and inoculating a suitable number of wells for each dilution step. Titrate 1 vial of an appropriate virus reference preparation in triplicate to validate each assay. The virus concentration of the reference preparation is monitored using a control chart and a titre is established on a historical basis by each laboratory. The relation with the appropriate European Pharmacopoeia Biological Reference Preparation is established and monitored at regular intervals if a manufacturer's reference preparation is used. Calculate the individual virus concentration for each vial of vaccine and for each replicate of the reference preparation as well as the corresponding combined virus concentrations, using the usual statistical methods (for example, *5.3*). The combined estimate of the virus concentration for the 3 vials of vaccine is not less than that stated on the label; the minimum virus concentration stated on the label is not less than 3.0 $\log_{10}$ $CCID_{50}$ per single human dose.

The assay is not valid if:

- the confidence interval (P = 0.95) of the estimated virus concentration of the reference preparation for the 3 replicates combined is greater than ± 0.3 $\log_{10}$ $CCID_{50}$;
- the virus concentration of the reference preparation differs by more than 0.5 $\log_{10}$ $CCID_{50}$ from the established value.

The assay is repeated if the confidence interval (P = 0.95) of the combined virus concentration of the vaccine is greater than ± 0.3 $\log_{10}$ $CCID_{50}$; data obtained from valid assays only are combined by the usual statistical methods (for example, *5.3*) to calculate the virus concentration of the sample. The confidence interval (P = 0.95) of the combined virus concentration is not greater than ± 0.3 $\log_{10}$ $CCID_{50}$.

Measles vaccine (live) BRP is suitable for use as a reference preparation.

Where justified and authorised, different assay designs may be used; this may imply the application of different validity and acceptance criteria. However, the vaccine must comply if tested as described above.

LABELLING

The label states:

- the strain of virus used for the preparation of the vaccine;
- the type and origin of the cells used for the preparation of the vaccine;
- the minimum virus concentration;
- that contact between the vaccine and disinfectants is to be avoided.

01/2013:2112

MENINGOCOCCAL GROUP C CONJUGATE VACCINE

Vaccinum meningococcale classis C coniugatum

DEFINITION

Meningococcal group C conjugate vaccine is a liquid or freeze-dried preparation of purified capsular polysaccharide derived from a suitable strain of *Neisseria meningitidis* group C covalently linked to a carrier protein. Meningococcal group C polysaccharide consists of partly *O*-acetylated or *O*-deacetylated repeating units of sialic acids, linked with 2α→9 glycosidic bonds. The carrier protein, when conjugated to group C polysaccharide, is capable of inducing a T-cell-dependent B-cell immune response to the polysaccharide. The vaccine may contain an adjuvant.

PRODUCTION

GENERAL PROVISIONS

The production method shall consistently have been shown to yield meningococcal group C conjugate vaccines of satisfactory immunogenicity and safety in man. The production of meningococcal group C polysaccharide and of the carrier protein are based on seed-lot systems.

Vaccines

During development studies and wherever revalidation is necessary, a test for pyrogens in rabbits (*2.6.8*) is carried out by injection of a suitable dose of the final lot. The vaccine is shown to be acceptable with respect to absence of pyrogenic activity.

The production method is validated to demonstrate that the vaccine, if tested, would comply with the test for abnormal toxicity for immunosera and vaccines for human use (*2.6.9*).

During development studies and wherever revalidation of the manufacturing process is necessary, it shall be demonstrated by tests in animals that the vaccine consistently induces a T-cell-dependent B-cell immune response.

The stability of the final lot and relevant intermediates is evaluated using 1 or more indicator tests. Such tests may include determination of molecular size, determination of free saccharide in the conjugate or an immunogenicity test in animals.

BACTERIAL SEED LOTS

The bacterial strains used for master seed lots shall be identified by historical records that include information on their origin and the tests used to characterise the strain. Cultures from the working seed lot shall have the same characteristics as the strain that was used to prepare the master seed lot.

Purity of bacterial cultures is verified by methods of suitable sensitivity. These may include inoculation into suitable media, examination of colony morphology, microscopic examination of Gram-stained smears and culture agglutination with suitable specific antisera.

MENINGOCOCCAL GROUP C POLYSACCHARIDE

N. meningitidis is grown in a liquid medium that does not contain high-molecular-mass polysaccharides and is free from ingredients that will form a precipitate upon addition of cetyltrimethylammonium bromide (CTAB). The culture may be inactivated by heat and filtered before the polysaccharide is precipitated by addition of CTAB. The precipitate is further purified using suitable methods to remove nucleic acids, proteins and lipopolysaccharides and the final purification step consists of ethanol precipitation. An *O*-deacetylation step may also be included. Volatile matter, including water, in the purified polysaccharide is determined by a suitable method such as thermogravimetry (*2.2.34*). The value is used to calculate the results of other tests with reference to the dried substance, as prescribed below.

Only meningococcal group C polysaccharide that complies with the following requirements may be used in the preparation of the conjugate.

Protein (*2.5.16*): maximum 1.0 per cent, calculated with reference to the dried substance.

Nucleic acid (*2.5.17*): maximum 1.0 per cent, calculated with reference to the dried substance.

***O*-acetyl groups**. Examine by a suitable method (for example *2.5.19*). An acceptable value is established for the particular product and each batch of meningococcal group C polysaccharide must be shown to comply with this limit.

Sialic acid (*2.5.23*): minimum 0.800 g of sialic acid per gram of meningococcal group C polysaccharide using *N-acetylneuraminic acid R* to prepare the reference solution.

Residual reagents. Where applicable, tests are carried out to determine residues of reagents used during inactivation and purification. An acceptable value for each reagent is established for the particular product and each batch of meningococcal group C polysaccharide must be shown to comply with this limit. Where validation studies have demonstrated removal of a residual reagent, the test on purified meningococcal group C polysaccharide may be omitted.

Molecular-size distribution. Examine by size-exclusion chromatography (*2.2.30*). An acceptable value is established for the particular product and each batch of meningococcal group C polysaccharide must be shown to comply with this limit. Where applicable, the molecular-size distribution is also determined after chemical modification of the meningococcal group C polysaccharide.

Identification and serological specificity. The identity and serological specificity are determined by a suitable immunochemical method (*2.7.1*) or other suitable method, for example ^{1}H nuclear magnetic resonance spectrometry (*2.2.33*).

Bacterial endotoxins (*2.6.14*): less than 100 IU per microgram of meningococcal group C polysaccharide.

CARRIER PROTEIN

The carrier protein is chosen so that when meningococcal group C polysaccharide is conjugated it is able to induce a T-cell-dependent immune response. Tetanus toxoid and the non-toxic mutant of diphtheria toxin-like protein, CRM 197, are suitable. The carrier protein is produced by culture of a suitable microorganism, the bacterial purity of which is verified.

Only a carrier protein that complies with the following requirements may be used in preparation of the conjugate.

Identification. The carrier protein is identified by a suitable immunochemical method (*2.7.1*).

CRM 197. Where CRM 197 is used as the carrier protein, it is not less than 90 per cent pure, determined by a suitable method. Suitable tests are carried out, for validation or routinely, to demonstrate that the product is non-toxic.

Tetanus toxoid. Where tetanus toxoid is used as the carrier, it is produced as described in the monograph *Tetanus vaccine (adsorbed) (0452)* and complies with the requirements prescribed therein for bulk purified toxoid, except that the antigenic purity (*2.7.27*) is not less than 1500 Lf per milligram of protein nitrogen and that the test for sterility (*2.6.1*) is not required.

BULK CONJUGATE

Meningococcal group C polysaccharide is chemically modified to enable conjugation; it is usually partly depolymerised either before or during this procedure. The conjugate is obtained by the covalent bonding of activated meningococcal group C oligosaccharide and carrier protein. The conjugate purification procedures are designed to remove residual reagents used for conjugation. The removal of residual reagents and reaction by-products is confirmed by suitable tests or by validation of the purification process.

Only a bulk conjugate that complies with the following requirements may be used in the preparation of the final bulk vaccine. For each test and for each particular product, limits of acceptance are established and each batch of conjugate must be shown to comply with these limits.

Molecular-size distribution. Examine by size-exclusion chromatography (*2.2.30*). An acceptable value is established for the particular product and each batch of bulk conjugate must be shown to comply with this limit.

Saccharide. The saccharide content is determined by a suitable validated assay (for example *2.5.23*). Anion-exchange liquid chromatography with pulsed amperometric detection (*2.2.29*) may also be used for determination of saccharide content. An acceptable value is established for the particular product and each batch of bulk conjugate must be shown to comply with this limit.

Protein. The protein content is determined by a suitable chemical method (for example *2.5.16*). An acceptable value is established for the particular product and each batch of bulk conjugate must be shown to comply with this limit.

Saccharide-to-protein ratio. Determine the ratio by calculation.

Free saccharide. Unbound saccharide is determined after removal of the conjugate, for example by anion-exchange liquid chromatography, size-exclusion or hydrophobic chromatography, ultrafiltration or other validated methods. An acceptable value is established for the particular product and each batch of bulk conjugate must be shown to comply with this limit.

Free carrier protein. Determine the content, either directly by a suitable method or by deriving the content by calculation from the results of other tests. An acceptable value is established for the particular product and each batch of bulk conjugate must be shown to comply with this limit.

Residual reagents. Removal of residual reagents such as cyanide is confirmed by suitable tests or by validation of the process.

Sterility (*2.6.1*). It complies with the test for sterility, carried out using 10 mL for each medium or the equivalent of 100 doses, whichever is less.

FINAL BULK VACCINE

An adjuvant and a stabiliser may be added to the bulk conjugate before dilution to the final concentration with a suitable diluent.

Only a final bulk vaccine that complies with the following requirement and is within the limits approved for the particular product may be used in preparation of the final lot.

Sterility (*2.6.1*). It complies with the test for sterility, carried out using 10 mL for each medium.

FINAL LOT

Only a final lot that is within the limits approved for the particular product and is satisfactory with respect to each of the requirement given below under Identification, Tests, and Assay may be released for use.

IDENTIFICATION

The vaccine is identified by a suitable immunochemical method (*2.7.1*).

TESTS

pH (*2.2.3*). The pH of the vaccine, reconstituted if necessary, is within ± 0.5 pH units of the limit approved for the particular product.

Aluminium (*2.5.13*): maximum 1.25 mg per single human dose, if aluminium hydroxide or hydrated aluminium phosphate is used as the adsorbent.

Water (*2.5.12*): maximum 3.0 per cent for freeze-dried vaccines.

Free saccharide. Unbound saccharide is determined after removal of the conjugate, for example by anion-exchange liquid chromatography, size-exclusion or hydrophobic chromatography, ultrafiltration or other validated methods. An acceptable value consistent with adequate immunogenicity, as shown in clinical trials, is established for the particular product and each final lot must be shown to comply with this limit.

Sterility (*2.6.1*). It complies with the test for sterility.

Bacterial endotoxins (*2.6.14*): less than 25 IU per single human dose.

ASSAY

Saccharide: minimum 80 per cent of the amount of meningococcal group C polysaccharide stated on the label. The saccharide content is determined by a suitable validated assay, for example sialic acid assay (*2.5.23*) or anion-exchange liquid chromatography with pulsed amperometric detection (*2.2.29*).

LABELLING

The label states:

- the number of micrograms of meningococcal group C polysaccharide per human dose;
- the type and number of micrograms of carrier protein per human dose.

01/2008:0250

MENINGOCOCCAL POLYSACCHARIDE VACCINE

Vaccinum meningococcale polysaccharidicum

DEFINITION

Meningococcal polysaccharide vaccine is a freeze-dried preparation of one or more purified capsular polysaccharides obtained from one or more suitable strains of *Neisseria meningitidis* group A, group C, group Y and group W135 that are capable of consistently producing polysaccharides.

N. meningitidis group A polysaccharide consists of partly *O*-acetylated repeating units of *N*-acetylmannosamine, linked with 1α→6 phosphodiester bonds.

N. meningitidis group C polysaccharide consists of partly *O*-acetylated repeating units of sialic acid, linked with 2α→9 glycosidic bonds.

N. meningitidis group Y polysaccharide consists of partly *O*-acetylated alternating units of sialic acid and D-glucose, linked with 2α→6 and 1α→4 glycosidic bonds.

N. meningitidis group W135 polysaccharide consists of partly *O*-acetylated alternating units of sialic acid and D-galactose, linked with 2α→6 and 1α→4 glycosidic bonds.

The polysaccharide component or components stated on the label together with calcium ions and residual moisture account for over 90 per cent of the mass of the preparation.

PRODUCTION

Production of the meningococcal polysaccharides is based on a seed-lot system. The production method shall have been shown to yield consistently meningococcal polysaccharide vaccines of satisfactory immunogenicity and safety in man.

The production method is validated to demonstrate that the product, if tested, would comply with the test for abnormal toxicity for immunosera and vaccines for human use (*2.6.9*).

SEED LOTS

The strains of *N. meningitidis* used for the master seed lots shall be identified by historical records that include information on their origin and by their biochemical and serological characteristics.

Cultures from each working seed lot shall have the same characteristics as the strain that was used to prepare the master seed lot. The strains have the following characteristics:

- colonies obtained from a culture are rounded, uniform in shape and smooth with a mucous, opalescent, greyish appearance,
- Gram staining reveals characteristic Gram-negative diplococci in "coffee-bean" arrangement,
- the oxidase test is positive,
- the culture utilises glucose and maltose,
- suspensions of the culture agglutinate with suitable specific antisera.

Purity of bacterial strains used for the seed lots is verified by methods of suitable sensitivity. These may include inoculation into suitable media, examination of colony morphology, microscopic examination of Gram-stained smears and culture agglutination with suitable specific antisera.

PROPAGATION AND HARVEST

The working seed lots are cultured on solid media that do not contain blood-group substances or ingredients of mammalian origin. The inoculum may undergo 1 or more subcultures in liquid medium before being used for inoculating the final medium. The liquid media used and the final medium are semisynthetic and free from substances precipitated by cetrimonium bromide (hexadecyltrimethylammonium bromide) and do not contain blood-group substances or high-molecular-mass polysaccharides.

The bacterial purity of the culture is verified by methods of suitable sensitivity. These may include inoculation into suitable media, examination of colony morphology, microscopic examination of Gram-stained smears and culture agglutination with suitable specific antisera.

The cultures are centrifuged and the polysaccharides precipitated from the supernatant by addition of cetrimonium bromide. The precipitate obtained is harvested and may be stored at – 20 °C awaiting further purification.

PURIFIED POLYSACCHARIDES

The polysaccharides are purified, after dissociation of the complex of polysaccharide and cetrimonium bromide, using suitable procedures to remove successively nucleic acids, proteins and lipopolysaccharides.

The final purification step consists of ethanol precipitation of the polysaccharides which are then dried and stored at – 20 °C. The loss on drying is determined by thermogravimetry (*2.2.34*) and the value is used to calculate the results of the other chemical tests with reference to the dried substance.

Only purified polysaccharides that comply with the following requirements may be used in the preparation of the final bulk vaccine.

Protein (*2.5.16*). Not more than 10 mg of protein per gram of purified polysaccharide, calculated with reference to the dried substance.

Nucleic acids (*2.5.17*). Not more than 10 mg of nucleic acids per gram of purified polysaccharide, calculated with reference to the dried substance.

***O*-Acetyl groups** (*2.5.19*). Not less than 2 mmol of *O*-acetyl groups per gram of purified polysaccharide for group A, not less than 1.5 mmol per gram of polysaccharide for group C, not less than 0.3 mmol per gram of polysaccharide for groups Y and W135, all calculated with reference to the dried substance.

Phosphorus (*2.5.18*). Not less than 80 mg of phosphorus per gram of group A purified polysaccharide, calculated with reference to the dried substance.

Sialic acid (*2.5.23*). Not less than 800 mg of sialic acid per gram of group C polysaccharide and not less than 560 mg of sialic acid per gram of purified polysaccharide for groups Y and W135, all calculated with reference to the dried substance. Use the following reference solutions.

Group C polysaccharide: a 150 mg/L solution of *N-acetylneuraminic acid R*.

Group Y polysaccharide: a solution containing 95 mg/L of *N-acetylneuraminic acid R* and 55 mg/L of *glucose R*.

Group W135 polysaccharide: a solution containing 95 mg/L of *N-acetylneuraminic acid R* and 55 mg/L of *galactose R*.

Calcium. If a calcium salt is used during purification, a determination of calcium is carried out on the purified polysaccharide; the content is within the limits approved for the particular product.

Distribution of molecular size. Examine by size-exclusion chromatography (*2.2.30*) using *agarose for chromatography R* or *cross-linked agarose for chromatography R*. Use a column about 0.9 m long and 16 mm in internal diameter equilibrated with a solvent having an ionic strength of 0.2 mol/kg and a pH of 7.0-7.5. Apply to the column about 2.5 mg of polysaccharide in a volume of about 1.5 mL and elute at about 20 mL/h. Collect fractions of about 2.5 mL and determine the content of polysaccharide by a suitable method. At least 65 per cent of group A polysaccharide, 75 per cent of group C polysaccharide, 80 per cent of group Y polysaccharide and 80 per cent of group W135 polysaccharide is eluted before a distribution coefficient (K_0) of 0.50 is reached. In addition, the percentages eluted before this distribution coefficient are within the limits approved for the particular product.

Identification and serological specificity. The identity and serological specificity are determined by a suitable immunochemical method (*2.7.1*). Identity and purity of each polysaccharide shall be confirmed; it shall be shown that there is not more than 1 per cent *m/m* of group-heterologous *N. meningitidis* polysaccharide.

Pyrogens (*2.6.8*). The polysaccharide complies with the test for pyrogens. Inject into each rabbit per kilogram of body mass 1 mL of a solution containing 0.025 µg of purified polysaccharide per millilitre.

FINAL BULK VACCINE

One or more purified polysaccharides of 1 or more *N. meningitidis* groups are dissolved in a suitable solvent that may contain a stabiliser. When dissolution is complete, the solution is filtered through a bacteria-retentive filter.

Only a final bulk vaccine that complies with the following requirement may be used in the preparation of the final lot.

Sterility (*2.6.1*). The final bulk vaccine complies with the test for sterility, carried out using 10 mL for each medium.

FINAL LOT

The final bulk vaccine is distributed aseptically into sterile containers. The containers are then closed so as to avoid contamination.

Only a final lot that is satisfactory with respect to each of the requirements prescribed below under Identification, Tests and Assay may be released for use.

CHARACTERS

A white or cream-coloured powder or pellet, freely soluble in water.

IDENTIFICATION

Carry out an identification test for each polysaccharide present in the vaccine by a suitable immunochemical method (*2.7.1*).

TESTS

Distribution of molecular size. Examine by size-exclusion chromatography (*2.2.30*). Use a column about 0.9 m long and 16 mm in internal diameter equilibrated with a solvent having an ionic strength of 0.2 mol/kg and a pH of 7.0-7.5. Apply to the column about 2.5 mg of each polysaccharide in a volume of about 1.5 mL and elute at about 20 mL/h. Collect fractions of about 2.5 mL and determine the content of polysaccharide by a suitable method.

For a divalent vaccine (group A + group C), use *cross-linked agarose for chromatography R*. The vaccine complies with the test if:

- 65 per cent of group A polysaccharide is eluted before $K_0 = 0.50$,
- 75 per cent of group C polysaccharide is eluted before $K_0 = 0.50$.

For a tetravalent vaccine (group A + group C + group Y + group W135), use *cross-linked agarose for chromatography R1* and apply a suitable immunochemical method (*2.7.1*) to establish the elution pattern of the different polysaccharides. The vaccine complies with the test if K_0 for the principal peak is:

- not greater than 0.70 for group A and group C polysaccharide,
- not greater than 0.57 for group Y polysaccharide,
- not greater than 0.68 for group W135 polysaccharide.

Water (*2.5.12*). Not more than 3.0 per cent, determined by the semi-micro determination of water.

Sterility (*2.6.1*). It complies with the test for sterility.

Pyrogens (*2.6.8*). It complies with the test for pyrogens. Inject per kilogram of the rabbit's mass 1 mL of a solution containing:

- 0.025 µg of polysaccharide for a monovalent vaccine,
- 0.050 µg of polysaccharide for a divalent vaccine,
- 0.10 µg of polysaccharide for a tetravalent vaccine.

ASSAY

Carry out an assay of each polysaccharide present in the vaccine.

For a divalent vaccine (group A + group C), use measurement of phosphorus (*2.5.18*) to determine the content of polysaccharide A and measurement of sialic acid (*2.5.23*) to determine the content of polysaccharide C. To determine sialic acid, use as reference solution a 150 mg/L solution of *N-acetylneuraminic acid R*.

For a tetravalent vaccine (group A + group C + group Y + group W135) a suitable immunochemical method (*2.7.1*) is used with a reference preparation of purified polysaccharide for each group.

The vaccine contains not less than 70 per cent and not more than 130 per cent of the quantity of each polysaccharide stated on the label.

LABELLING

The label states:

- the group or groups of polysaccharides (A, C, Y or W135) present in the vaccine,
- the number of micrograms of polysaccharide per human dose.

04/2008:0538

MUMPS VACCINE (LIVE)

Vaccinum parotitidis vivum

DEFINITION

Mumps vaccine (live) is a freeze-dried preparation of a suitable attenuated strain of mumps virus. The vaccine is reconstituted immediately before use, as stated on the label, to give a clear liquid that may be coloured owing to the presence of a pH indicator.

PRODUCTION

The production of vaccine is based on a virus seed-lot system and, if the virus is propagated in human diploid cells, a cell-bank system. The production method shall have been shown to yield consistently live mumps vaccines of adequate immunogenicity and safety in man. Unless otherwise justified and authorised, the virus in the final vaccine shall have undergone no more passages from the master seed lot than were used to prepare the vaccine shown in clinical studies to be satisfactory with respect to safety and efficacy.

The potential neurovirulence of the vaccine strain is considered during preclinical development, based on available epidemiological data on neurovirulence and neurotropism, primarily for the wild-type virus. In light of this, a risk analysis is carried out. Where necessary and if available, a test is carried out on the vaccine strain using an animal model that differentiates wild-type and attenuated virus; tests on strains of intermediate attenuation may also be needed.

The production method is validated to demonstrate that the product, if tested, would comply with the test for abnormal toxicity for immunosera and vaccines for human use (*2.6.9*).

SUBSTRATE FOR VIRUS PROPAGATION

The virus is propagated in human diploid cells (*5.2.3*) or in chick-embryo cells or in the amniotic cavity of chick embryos derived from a chicken flock free from specified pathogens (*5.2.2*).

SEED LOT

The strain of mumps virus used shall be identified by historical records that include information on the origin of the strain and its subsequent manipulation. Virus seed lots are prepared in large quantities and stored at temperatures below – 20 °C if freeze-dried, or below – 60 °C if not freeze-dried.

Only a seed lot that complies with the following requirements may be used for virus propagation.

Identification. The master and working seed lots are identified as mumps virus by serum neutralisation in cell culture, using specific antibodies.

Virus concentration. The virus concentration of the master and working seed lots is determined to ensure consistency of production.

Extraneous agents (*2.6.16*). The working seed lot complies with the requirements for seed lots.

PROPAGATION AND HARVEST

All processing of the cell bank and subsequent cell cultures is done under aseptic conditions in an area where no other cells are handled during the production. Suitable animal (but not human) serum may be used in the culture media. Serum and trypsin used in the preparation of cell suspensions and culture media are shown to be free from extraneous agents. The cell culture medium may contain a pH indicator such as phenol red and suitable antibiotics at the lowest effective concentration. It is preferable to have a substrate free from antibiotics during production. Not less than 500 mL of the production cell cultures is set aside as uninfected cell cultures (control cells). If the virus is propagated in chick embryos, 2 per cent but not less than 20 eggs are set aside as uninfected control eggs. The viral suspensions are harvested at a time appropriate to the strain of virus being used.

Only a single harvest that complies with the following requirements may be used in the preparation of the final bulk vaccine.

Identification. The single harvest contains virus that is identified as mumps virus by serum neutralisation in cell culture, using specific antibodies.

Virus concentration. The virus concentration in the single harvest is determined as prescribed under Assay to monitor consistency of production and to determine the dilution to be used for the final bulk vaccine.

Extraneous agents (*2.6.16*). The single harvest complies with the tests for extraneous agents.

Control cells or eggs. If human diploid cells are used for production, the control cells comply with a test for identification; the control cells and the control eggs comply with the tests for extraneous agents (*2.6.16*).

FINAL BULK VACCINE

Single harvests that comply with the above tests are pooled and clarified to remove cells. A suitable stabiliser may be added and the pooled harvests diluted as appropriate.

Only a final bulk vaccine that complies with the following requirement may be used in the preparation of the final lot.

Bacterial and fungal contamination. The final bulk vaccine complies with the test for sterility (*2.6.1*), carried out using 10 mL for each medium.

FINAL LOT

A minimum virus concentration for release of the product is established such as to ensure, in light of stability data, that the minimum concentration stated on the label will be present at the end of the period of validity.

Only a final lot that complies with the requirements for minimum virus concentration for release, with the following requirement for thermal stability and with each of the requirements given below under Identification and Tests may be released for use. Provided that the tests for bovine serum albumin and, where applicable, for ovalbumin have been carried out with satisfactory results on the final bulk vaccine, they may be omitted on the final lot.

Thermal stability. Maintain at least 3 vials of the final lot of freeze-dried vaccine in the dry state at 37 ± 1 °C for 7 days. Determine the virus concentration as described under Assay in parallel for the heated vaccine and for vaccine stored at the temperature recommended for storage. The virus concentration of the heated vaccine is not more than 1.0 $\log_{10}$ lower than that of the unheated vaccine.

IDENTIFICATION

When the vaccine reconstituted as stated on the label is mixed with specific mumps antibodies, it is no longer able to infect susceptible cell cultures.

TESTS

Bacterial and fungal contamination. The reconstituted vaccine complies with the test for sterility (*2.6.1*).

Bovine serum albumin. Not more than 50 ng per single human dose, determined by a suitable immunochemical method (*2.7.1*).

Ovalbumin. If the vaccine is produced in chick embryos, it contains not more than 1 µg of ovalbumin per single human dose, determined by a suitable immunochemical method (*2.7.1*).

Water (*2.5.12*). Not more than 3.0 per cent, determined by the semi-micro determination of water.

ASSAY

Titrate the vaccine for infective virus, using at least 3 separate vials of vaccine and inoculating a suitable number of wells for each dilution step. Titrate 1 vial of an appropriate virus reference preparation in triplicate to validate each assay. The virus concentration of the reference preparation is monitored using a control chart and a titre is established on a historical basis by each laboratory. The relation with the appropriate European Pharmacopoeia Biological Reference Preparation is established and monitored at regular intervals if a manufacturer's reference preparation is used. Calculate the individual virus concentration for each vial of vaccine and for each replicate of the reference preparation as well as the corresponding combined virus concentrations, using the usual statistical methods (for example, *5.3*). The combined estimate of the virus concentration for the 3 vials of vaccine is not less than that stated on the label; the minimum virus concentration stated on the label is not less than 3.7 $\log_{10}$ $CCID_{50}$ per single human dose.

The assay is not valid if:

- the confidence interval (P = 0.95) of the estimated virus concentration of the reference preparation for the 3 replicates combined is greater than ± 0.3 $\log_{10}$ $CCID_{50}$;
- the virus concentration of the reference preparation differs by more than 0.5 $\log_{10}$ $CCID_{50}$ from the established value.

The assay is repeated if the confidence interval (P = 0.95) of the combined virus concentration of the vaccine is greater than ± 0.3 $\log_{10}$ $CCID_{50}$; data obtained from valid assays only are combined by the usual statistical methods (for example, *5.3*) to calculate the virus concentration of the sample. The confidence interval (P = 0.95) of the combined virus concentration is not greater than ± 0.3 $\log_{10}$ $CCID_{50}$.

Mumps vaccine (live) BRP is suitable for use as a reference preparation.

Where justified and authorised, different assay designs may be used; this may imply the application of different validity and acceptance criteria. However, the vaccine must comply if tested as described above.

LABELLING

The label states:

- the strain of virus used for the preparation of the vaccine;
- that the vaccine has been prepared in chick embryos or the type and origin of cells used for the preparation of the vaccine;
- the minimum virus concentration;
- that contact between the vaccine and disinfectants is to be avoided.

07/2013:1356

PERTUSSIS VACCINE (ACELLULAR, COMPONENT, ADSORBED)

Vaccinum pertussis sine cellulis ex elementis praeparatum adsorbatum

DEFINITION

Pertussis vaccine (acellular, component, adsorbed) is a preparation of individually prepared and purified antigenic components of *Bordetella pertussis* adsorbed on a mineral carrier such as aluminium hydroxide or hydrated aluminium phosphate.

The vaccine contains either pertussis toxoid or a pertussis-toxin-like protein free from toxic properties, produced by expression of a genetically modified form of the corresponding gene. Pertussis toxoid is prepared from pertussis toxin by a method that renders the latter harmless while maintaining adequate immunogenic properties and avoiding reversion to toxin. The vaccine may also contain filamentous haemagglutinin, pertactin (a 69 kDa outer-membrane protein) and other defined components of *B. pertussis* such as fimbrial-2 and fimbrial-3 antigens. The latter 2 antigens may be co-purified. The antigenic composition and characteristics are based on evidence of protection and freedom from unexpected reactions in the target group for which the vaccine is intended.

PRODUCTION

GENERAL PROVISIONS

The production method shall have been shown to yield consistently vaccines comparable with the vaccine of proven clinical efficacy and safety in man.

Where a genetically modified form of *B. pertussis* is used, production consistency and genetic stability shall be established in conformity with the requirements of the monograph *Products of recombinant DNA technology (0784)*.

Reference vaccine. A batch of vaccine shown to be effective in clinical trials or a batch representative thereof is used as a reference vaccine. For the preparation of a representative batch, strict adherence to the production process used for the batch tested in clinical trials is necessary. The reference vaccine is preferably stabilised by a method that has been shown to have no significant effect on the assay procedure when the stabilised and non-stabilised batches are compared.

CHARACTERISATION OF COMPONENTS

During development of the vaccine, the production process shall be validated to demonstrate that it yields consistently individual components that comply with the following requirements; after demonstration of consistency, the tests need not be applied routinely to each batch.

Adenylate cyclase. Not more than 500 ng in the equivalent of 1 dose of the final vaccine, determined by immunoblot analysis or another suitable method.

Tracheal cytotoxin. Not more than 2 pmol in the equivalent of 1 dose of the final vaccine, determined by a suitable method such as a biological assay or liquid chromatography (*2.2.29*).

Absence of residual dermonecrotic toxin. Inject intradermally into each of 3 unweaned mice, in a volume of 0.1 mL, the amount of component or antigenic fraction equivalent to 1 dose of the final vaccine. Observe for 48 h. No dermonecrotic reaction is demonstrable.

Specific properties. The components of the vaccine are analysed by one or more of the methods shown below in order to determine their identity and specific properties (activity per unit amount of protein) in comparison with reference preparations.

Pertussis toxin. Chinese hamster ovary (CHO) cell-clustering effect and haemagglutination as *in vitro* methods; lymphocytosis-promoting activity, histamine-sensitising activity and insulin secretory activity as *in vivo* methods. The toxin shows ADP-ribosyl transferase activity using transducin as the acceptor.

Filamentous haemagglutinin. Haemagglutination and inhibition by a specific antibody.

Pertactin, fimbrial-2 and fimbrial-3 antigens. Reactivity with specific antibodies.

Pertussis toxoid. The toxoid induces in animals production of antibodies capable of inhibiting all the properties of pertussis toxin.

PURIFIED COMPONENTS

Production of each component is based on a seed-lot system. The seed cultures from which toxin is prepared are managed to conserve or, where necessary, restore toxinogenicity by deliberate selection.

None of the media used at any stage contains blood or blood products of human origin. Media used for the preparation of seed lots and inocula may contain blood or blood products of animal origin.

Pertussis toxin and, where applicable, filamentous haemagglutinin and pertactin are purified and, after appropriate characterisation, detoxified using suitable chemical reagents, by a method that avoids reversion of the toxoid to toxin, particularly on storage or exposure to heat. Other components such as fimbrial-2 and fimbrial-3 antigens are purified either separately or together, characterised and shown to be free from toxic substances. The purification procedure is validated to demonstrate appropriate clearance of substances used during culture or purification.

The content of bacterial endotoxins (*2.6.14*) is determined to monitor the purification procedure and to limit the amount in the final vaccine. The limits applied for the individual components are such that the final vaccine contains less than 100 IU per single human dose.

Before detoxification, the purity of the components is determined by a suitable method such as polyacrylamide gel electrophoresis (PAGE) or liquid chromatography. SDS-PAGE or immunoblot analysis with specific monoclonal or polyclonal antibodies may be used to characterise subunits. Requirements are established for each individual product.

Only purified components that comply with the following requirements may be used in the preparation of the final bulk vaccine.

Sterility (*2.6.1*). Carry out the test for sterility using for each medium a quantity of purified component equivalent to not less than 100 doses.

Residual pertussis toxin (*2.6.33*). It complies with the test.

A validated test based on the clustering effect of the toxin for Chinese hamster ovary (CHO) cells may be used instead of the test in mice.

Residual detoxifying agents and other reagents. The content of residual detoxifying agents and other reagents is determined and shown to be below approved limits unless validation of the process has demonstrated acceptable clearance.

Antigen content. Determine the antigen content by a suitable immunochemical method (*2.7.1*) and protein nitrogen by sulfuric acid digestion (*2.5.9*) or another suitable method. The ratio of antigen content to protein nitrogen is within the limits established for the product.

FINAL BULK VACCINE

The vaccine is prepared by adsorption of suitable quantities of purified components, separately or together, onto aluminium hydroxide or hydrated aluminium phosphate. A suitable antimicrobial preservative may be added.

Only a final bulk vaccine that complies with the following requirements may be used in the preparation of the final lot.

Antimicrobial preservative. Where applicable, determine the amount of antimicrobial preservative by a suitable chemical or physico-chemical method. The amount is not less than 85 per cent and not greater than 115 per cent of the intended content.

Sterility (*2.6.1*). Carry out the test for sterility using 10 mL for each medium.

FINAL LOT

Only a final lot that is satisfactory with respect to each of the requirements given below under Identification, Tests and Assay may be released for use. Provided that the tests for residual pertussis toxin and irreversibility of pertussis toxoid, antimicrobial preservative, free formaldehyde and the assay have been carried out with satisfactory results on the final bulk vaccine, these tests may be omitted on the final lot.

IDENTIFICATION

Subject the vaccine to a suitable desorption procedure such as the following: dissolve in the vaccine to be examined sufficient *sodium citrate R* to give a 10 g/L solution; maintain at 37 °C for about 16 h and centrifuge until a clear supernatant is obtained. Examined by a suitable immunochemical method (*2.7.1*), the clear supernatant reacts with specific antisera to the components stated on the label.

TESTS

Residual pertussis toxin and irreversibility of pertussis toxoid (*2.6.33*). The final lot complies with the test.

Aluminium (*2.5.13*): maximum 1.25 mg per single human dose, if aluminium hydroxide or hydrated aluminium phosphate is used as the adsorbent.

Free formaldehyde (*2.4.18*): maximum 0.2 g/L.

Antimicrobial preservative. Where applicable, determine the amount of antimicrobial preservative by a suitable chemical or physico-chemical method. The amount is not less than the minimum amount shown to be effective and is not greater than 115 per cent of the quantity stated on the label.

Sterility (*2.6.1*). It complies with the test for sterility.

ASSAY

Carry out one of the prescribed methods for the assay of pertussis vaccine (acellular) (*2.7.16*).

The capacity of the vaccine to induce antibodies for each included acellular pertussis antigen is not significantly (P = 0.95) less than that of the reference vaccine.

LABELLING

The label states:

- the names and amounts of the components present in the vaccine;
- where applicable, that the vaccine contains a pertussis toxin-like protein produced by genetic modification;
- the name and amount of the adsorbent;
- that the vaccine must be shaken before use;
- that the vaccine is not to be frozen.

07/2013:1595

PERTUSSIS VACCINE (ACELLULAR, CO-PURIFIED, ADSORBED)

Vaccinum pertussis sine cellulis copurificatum adsorbatum

DEFINITION

Pertussis vaccine (acellular, co-purified, adsorbed) is a preparation of antigenic components of *Bordetella pertussis* adsorbed on a mineral carrier such as aluminium hydroxide or hydrated aluminium phosphate.

The vaccine contains an antigenic fraction purified without separation of the individual components. The antigenic fraction is treated by a method that transforms pertussis toxin to toxoid, rendering it harmless while maintaining adequate immunogenic properties of all the components and avoiding reversion to toxin. The antigenic fraction is composed of pertussis toxoid, filamentous haemagglutinin, pertactin (a 69 kDa outer-membrane protein) and other defined components of *B. pertussis* such as fimbrial-2 and fimbrial-3 antigens. It may contain residual pertussis toxin up to a maximum level approved by the competent authority. The antigenic composition and characteristics are based on evidence of protection and freedom from unexpected reactions in the target group for which the vaccine is intended.

PRODUCTION

GENERAL PROVISIONS

The production method shall have been shown to yield consistently vaccines comparable with the vaccine of proven clinical efficacy and safety in man.

Reference vaccine. A batch of vaccine shown to be effective in clinical trials or a batch representative thereof is used as a reference vaccine. For the preparation of a representative batch, strict adherence to the production process used for the batch tested in clinical trials is necessary. The reference vaccine is preferably stabilised, by a method that has been shown to have no significant effect on the assay procedure when the stabilised and non-stabilised batches are compared.

CHARACTERISATION OF COMPONENTS

During development of the vaccine, the production process shall be validated to demonstrate that it yields consistently an antigenic fraction that complies with the following requirements; after demonstration of consistency, the tests need not be applied routinely to each batch.

Adenylate cyclase. Not more than 500 ng in the equivalent of 1 dose of the final vaccine, determined by immunoblot analysis or another suitable method.

Tracheal cytotoxin. Not more than 2 pmol in the equivalent of 1 dose of the final vaccine, determined by a suitable method such as a biological assay or liquid chromatography (*2.2.29*).

Absence of residual dermonecrotic toxin. Inject intradermally into each of 3 unweaned mice, in a volume of 0.1 mL, the amount of antigenic fraction equivalent to 1 dose of the final vaccine. Observe for 48 h. No dermonecrotic reaction is demonstrable.

Specific properties. The antigenic fraction is analysed by one or more of the methods shown below in order to determine the identity and specific properties (activity per unit amount of protein) of its components in comparison with reference preparations.

Pertussis toxin. Chinese hamster ovary (CHO) cell-clustering effect and haemagglutination as *in vitro* methods; lymphocytosis-promoting activity, histamine-sensitising activity and insulin secretory activity as *in vivo* methods. The toxin shows ADP-ribosyl transferase activity using transducin as the acceptor.

Filamentous haemagglutinin. Haemagglutination and inhibition by a specific antibody.

Pertactin, fimbrial-2 and fimbrial-3 antigens. Reactivity with specific antibodies.

Pertussis toxoid. The toxoid induces in animals the production of antibodies capable of inhibiting all the properties of pertussis toxin.

PURIFIED ANTIGENIC FRACTION

Production of the antigenic fraction is based on a seed-lot system. The seed cultures are managed to conserve or, where necessary, restore toxinogenicity by deliberate selection. None of the media used at any stage contains blood or blood products of human origin. Media used for the preparation of seed batches and inocula may contain blood or blood products of animal origin.

The antigenic fraction is purified and, after appropriate characterisation, detoxified using suitable reagents by a method that ensures minimal reversion of toxoid to toxin, particularly on storage or exposure to heat. The purification procedure is validated to demonstrate appropriate clearance of substances used during culture or purification.

The content of bacterial endotoxins (*2.6.14*) is determined to monitor the purification procedure and to limit the amount in the final vaccine. The limits applied are such that the final vaccine contains not more than 100 IU per single human dose.

Before detoxification, the purity of the antigenic fraction is determined by a suitable method such as polyacrylamide gel electrophoresis (PAGE) or liquid chromatography. SDS-PAGE or immunoblot analysis with specific monoclonal or polyclonal antibodies may be used to characterise subunits. Requirements are established for each individual product.

Only a purified antigenic fraction that complies with the following requirements may be used in the preparation of the final bulk vaccine.

Sterility. Carry out the test for sterility (*2.6.1*) using for each medium a quantity of purified antigenic fraction equivalent to not less than 100 doses of the final vaccine.

Residual pertussis toxin (*2.6.33*). The purified antigenic fraction complies with the test.

A validated test based on the clustering effect of the toxin for Chinese hamster ovary (CHO) cells may be used instead of the test in mice.

Residual detoxifying agents and other reagents. The content of residual detoxifying agents and other reagents is determined and shown to be below approved limits unless validation of the process has demonstrated acceptable clearance.

Antigen content. Determine the complete quantitative antigen composition of the antigenic fraction by suitable immunochemical methods (*2.7.1*) and protein nitrogen by sulfuric acid digestion (*2.5.9*) or another suitable method. The ratio of total antigen content to protein nitrogen is within the limits established for the product.

FINAL BULK VACCINE

The vaccine is prepared by adsorption of a suitable quantity of the antigenic fraction onto aluminium hydroxide or hydrated aluminium phosphate. A suitable antimicrobial preservative may be added.

Only a final bulk vaccine that complies with the following requirements may be used in the preparation of the final lot.

Antimicrobial preservative. Where applicable, determine the amount of antimicrobial preservative by a suitable chemical or physico-chemical method. The amount is not less than 85 per cent and not greater than 115 per cent of the intended content.

Sterility. The final bulk vaccine complies with the test for sterility (*2.6.1*), carried out using 10 mL for each medium.

FINAL LOT

Only a final lot that is satisfactory with respect to each of the requirements given below under Identification, Tests and Assay may be released for use.

Provided that the tests for residual pertussis toxin and irreversibility of pertussis toxoid, antimicrobial preservative, free formaldehyde and the assay have been carried out with satisfactory results on the final bulk vaccine, these tests may be omitted on the final lot.

IDENTIFICATION

Subject the vaccine to a suitable desorption procedure such as the following: dissolve in the vaccine to be examined sufficient *sodium citrate R* to give a 10 g/L solution; maintain at 37 °C for about 16 h and centrifuge until a clear supernatant is obtained. Examined by a suitable immunochemical method (*2.7.1*), the clear supernatant reacts with specific antisera to the components in the vaccine.

TESTS

Residual pertussis toxin and irreversibility of pertussis toxoid (*2.6.33*). The final lot complies with the test.

Antimicrobial preservative. Where applicable, determine the amount of antimicrobial preservative by a suitable chemical or physico-chemical method. The amount is not less than the minimum amount shown to be effective and is not greater than 115 per cent of the quantity stated on the label.

Aluminium (*2.5.13*): maximum 1.25 mg per single human dose, if aluminium hydroxide or hydrated aluminium phosphate is used as the adsorbent.

Free formaldehyde (*2.4.18*): maximum 0.2 g/L.

Sterility. It complies with the test for sterility (*2.6.1*).

ASSAY

Carry out one of the prescribed methods for the assay of pertussis vaccine (acellular) (*2.7.16*).

The capacity of the vaccine to induce antibodies for each included acellular pertussis antigen is not significantly (P = 0.95) less than that of the reference vaccine.

LABELLING

The label states:

- the names and amounts of the antigenic components present in the vaccine,
- the maximum amount of residual pertussis toxin present in the vaccine,
- the maximum degree of reversion of toxoid to toxin during the period of validity,
- the name and amount of the adsorbent,
- that the vaccine must be shaken before use,
- that the vaccine is not to be frozen.

01/2010:0161
corrected 7.2

PERTUSSIS VACCINE (WHOLE CELL, ADSORBED)

Vaccinum pertussis ex cellulis integris adsorbatum

DEFINITION

Pertussis vaccine (whole cell, adsorbed) is a sterile suspension of inactivated whole cells of one or more strains of *Bordetella pertussis*, treated to minimise toxicity and retain potency. The vaccine contains a mineral adsorbent such as hydrated aluminium phosphate or aluminium hydroxide.

PRODUCTION

GENERAL PROVISIONS

The production process shall have been shown to yield consistently vaccines comparable with the vaccine of proven clinical efficacy and safety in man.

Levels of pertussis toxin, active heat-labile toxin (dermonecrotic toxin) or tracheal cytotoxin must be comparable to the levels present in the vaccine of proven clinical efficacy and safety in man and be approved by the competent authority.

CHOICE OF VACCINE STRAIN

The vaccine consists of a mixture of one or more strains of *B. pertussis*. Strains of *B. pertussis* used in preparing vaccines are well characterised and chosen in such a way that the final vaccine contains predominantly phase I cells that display fimbriae 2 and 3, as determined by an agglutination test or other suitable immunochemical method (*2.7.1*).

SEED LOTS

The production of pertussis vaccine is based on a seed-lot system.

The strains of *B. pertussis* used are identified by a full historical record, including information on the origin of the strain and its subsequent manipulation, characteristics on isolation, and particularly on all tests carried out periodically to verify the strain's characters.

The media chosen for growing *B. pertussis* are carefully selected and enable the micro-organism to retain phase I characteristics.

When animal blood or animal blood products are used, they are removed by washing the harvested bacteria.

Human blood or human blood products are not used in any culture media for propagating bacteria, either for seed or for vaccine.

PROPAGATION AND HARVEST

Each strain is grown separately from the working seed lot.

Cultures are checked at different stages of fermentation (subcultures and main culture) for purity, identity, cell opacity and pH. Unsatisfactory cultures must be discarded.

Production cultures are shown to be consistent in respect of growth rate, pH and yield of cells or cell products.

The bacteria are harvested and may be washed to remove substances derived from the medium and suspended in a 9 g/L solution of sodium chloride or other suitable isotonic solution.

MONOVALENT CELL HARVEST

Consistency of production is monitored in respect of growth rate, pH, yield and demonstration of characteristics of phase I organisms in the culture, such as presence of fimbriae 2 and 3 and haemolytic activity. Single harvests are not used for the final bulk vaccine unless they have been shown to contain *B. pertussis* cells with the same characteristics with regard to growth and agglutinogens as the parent strain, and to be free from contaminating bacteria and fungi.

Only a monovalent harvest that complies with the following requirements may be used in further production.

Purity. Samples of single harvests taken before inactivation are examined by microscopy of Gram-stained smears or by inoculation into appropriate culture media or by another suitable procedure.

Opacity. The opacity of each single harvest is measured not later than 2 weeks after harvest and before the bacterial suspension has been subjected to any process capable of altering its opacity, by comparison with the International Reference Preparation of Opacity, and used as the basis of calculation for subsequent stages in vaccine preparation. The equivalence in International Units of the International Reference Preparation is stated by the World Health Organization.

A spectrophotometric method validated against the opacity reference preparation may be used and absorbance may, for example, be measured at 600 nm (*2.2.25*).

INACTIVATION AND DETOXIFICATION OF B. PERTUSSIS SUSPENSION

Inactivation is initiated as soon as possible after taking samples of single harvests for purity control and opacity measurement. The bacteria are killed and detoxified in controlled conditions by means of a suitable chemical agent or by heating or by a combination of these methods. The suspension is maintained at 5 ± 3 °C for a suitable period to diminish its toxicity.

Only an inactivated monovalent cell bulk that complies with established specifications for the following tests may be used in the preparation of the final bulk.

Residual live *B. pertussis*. Inactivation of the whole cells of *B. pertussis* is verified by a suitable culture medium.

Pertussis toxin. Presence of pertussis toxin is measured by a CHO cell culture assay using a semi-quantitative technique and range determined for the particular product.

pH (*2.2.3*): within the range approved for the particular product.

Identification: verified by agglutination assay or suitable immunodiffusion assay.

Sterility (*2.6.1*). It complies with the test for sterility, carried out using 10 mL for each medium.

Opacity. The opacity of each single harvest is measured in the final phase, at the end of the main fermentation process, by comparison with the International Reference Preparation of Opacity. The equivalence in International Units of the International Reference Preparation is stated by the World Health Organization. The absorbance, for example measured at 600 nm (*2.2.25*), is within the range approved for the particular product.

FINAL BULK

The final bulk vaccine is prepared by aseptically mixing suitable quantities of the inactivated single harvests.

If 2 or more strains of *B. pertussis* are used, the composition of consecutive lots of the final bulk vaccine shall be consistent with respect to the proportion of each strain as measured in opacity units. The bacterial concentration of the final bulk vaccine does not exceed that corresponding to an opacity of 20 IU per single human dose. The opacity measured on the single harvests is used to calculate the bacterial concentration in the final bulk. A mineral adsorbent such as hydrated aluminium phosphate or aluminium hydroxide is added to the cell suspension. Suitable antimicrobial preservatives may be added. Phenol is not used as a preservative.

Only a final bulk that complies with the following requirements may be used in the preparation of the final lot.

Fimbriae. Each bulk is examined, before adsorbent is added, for the presence of fimbriae 2 and 3 to ensure that appropriate expression has occurred during bacterial growth.

Sterility (*2.6.1*). It complies with the test for sterility, carried out using 10 mL for each medium.

Antimicrobial preservative. Where applicable, determine the amount of antimicrobial preservative by a suitable chemical or physico-chemical method. The amount is not less than 85 per cent and not greater than 115 per cent of the intended amount.

FINAL LOT

The final bulk is mixed to homogeneity and filled aseptically into suitable containers.

Only a final lot that is within the limits approved for the particular product and is satisfactory with respect to each of the requirements given below under Identification, Tests and Assay may be released for use. Provided the tests for specific toxicity, free formaldehyde and antimicrobial preservative and the determination of potency have been carried out with satisfactory results on the final bulk vaccine, they may be omitted on the final lot.

IDENTIFICATION

Dissolve in the vaccine to be examined sufficient *sodium citrate R* to give a 100 g/L solution. Maintain at 37 °C for about 16 h and centrifuge to obtain a bacterial precipitate. Identity of pertussis vaccine is based on an immunological reaction, for example agglutination of the resuspended bacteria with a specific anti-pertussis serum or another suitable immunochemical method (*2.7.1*).

TESTS

Specific toxicity. Use not fewer than 5 healthy mice each weighing 14-16 g for the vaccine group and for the saline control. Use mice of the same sex or distribute males and females equally between the groups. Inject each mouse of the vaccine group intraperitoneally with 0.5 mL, containing a quantity of the vaccine equivalent to not less than half the single human dose. Inject each mouse of the control group with 0.5 mL of a 9 g/L sterile solution of *sodium chloride R*, preferably containing, where applicable, the same amount of antimicrobial preservative as that injected with the vaccine. Weigh the groups of mice immediately before the injection and 72 h and 7 days after the injection. The vaccine complies with the test if: (a) at the end of 72 h the average weight of the group of vaccinated mice is not less than that preceding the injection; (b) at the end of 7 days the average increase in mass per vaccinated mouse is not less than 60 per cent of that per control mouse; and (c) not more than 5 per cent of the vaccinated mice die during the test. If the test is carried out using 5 mice and 1 vaccinated mouse dies, the test may be repeated using 15 mice and the results of both tests combined.

Aluminium (*2.5.13*): maximum 1.25 mg per single human dose, if aluminium hydroxide or hydrated aluminium phosphate is used as the adsorbent.

Free formaldehyde (*2.4.18*): maximum 0.2 g/L, where applicable.

Antimicrobial preservative. Where applicable, determine the amount of antimicrobial preservative by a suitable chemical method. The content is not less than the minimum amount shown to be effective and is not greater than 115 per cent of the quantity stated on the label.

Sterility (*2.6.1*). It complies with the test for sterility.

ASSAY

Carry out the assay of pertussis vaccine (whole cell) (*2.7.7*).

The estimated potency is not less than 4.0 IU per single human dose and the lower confidence limit ($P = 0.95$) of the estimated potency is not less than 2.0 IU per single human dose.

LABELLING

The label states:

- the minimum number of International Units per single human dose;

- the method used for inactivation;
- the name and the amount of the adsorbent;
- that the vaccine must be shaken before use;
- that the vaccine is not to be frozen.

01/2013:2150

PNEUMOCOCCAL POLYSACCHARIDE CONJUGATE VACCINE (ADSORBED)

Vaccinum pneumococcale polysaccharidicum coniugatum adsorbatum

DEFINITION

Pneumococcal polysaccharide conjugate vaccine (adsorbed) is a sterile suspension of purified capsular polysaccharides obtained from *Streptococcus pneumoniae* serotypes individually conjugated to a carrier protein. The carrier protein used may vary for the various polysaccharide conjugates contained in a multivalent vaccine. The vaccine may be adsorbed on a suitable adjuvant or adsorbant.

Each serotype, produced from suitable pathogenic strains of *S. pneumoniae*, is grown in an appropriate medium.

The individual polysaccharides are purified through suitable purification methods (for example centrifugation, precipitation, ultrafiltration and column chromatography).

Each polysaccharide has a defined composition and a defined molecular size range.

The choice of polysaccharide depends on the frequency of the serotypes responsible for acute pathologies and their geographical distribution. The vaccine contains immunochemically different capsular polysaccharides.

PRODUCTION

GENERAL PROVISIONS

The production method shall have been shown to yield consistently *S. pneumoniae* conjugate vaccines of adequate safety and immunogenicity in man. The production of polysaccharides and of the carrier(s) is based on a seed-lot system.

During development studies and wherever revalidation is necessary, a test for pyrogens in rabbits (*2.6.8*) is carried out. The vaccine is shown to be acceptable with respect to absence of pyrogenic activity.

The production method is validated to demonstrate that the product, if tested, would comply with the test for abnormal toxicity for immunosera and vaccines for human use (*2.6.9*).

During development studies and whenever revalidation of the manufacturing process is necessary, it shall be demonstrated by tests in animals that the vaccine consistently induces a T-cell-dependent B-cell immune response.

The stability of the conjugated bulk and/or final lot and pneumococcal saccharide is evaluated using suitable indicator tests. Such tests may include determination of molecular size, quantification of saccharide content and free polysaccharide content in the conjugate.

BACTERIAL SEED LOTS

The bacterial strains used for master seed lots shall be identified by historical records that include information on their origin and the tests used to characterise the strain.

Cultures obtained from the working seed lot shall have the same characteristics as the strain that was used to prepare the master seed lot.

Purity of bacterial cultures is verified by methods of suitable sensitivity. These may include inoculation into suitable media, examination of colony morphology, microscopic examination of Gram-stained smears and culture agglutination with suitable specific antisera.

PNEUMOCOCCAL POLYSACCHARIDES

Each strain of *S. pneumoniae* serotypes is individually grown in a liquid medium that does not contain high-molecular-mass polysaccharides; if any ingredient of the medium contains blood-group substances, the process is validated to demonstrate that after the purification step they are no longer detectable. The bacterial purity of the culture is verified by suitable methods. The culture is then inactivated. Each polysaccharide is separated from the liquid culture and purified by suitable methods. Volatile matter, including water, in the purified polysaccharide is determined by a suitable method such as thermogravimetry (*2.2.34*), semi-micro determination of water (*2.5.12*) or, where applicable, determination of solvent and/or alcohol content by spectrometry. The values are used to calculate the results of other chemical tests with reference to the dried substance, as prescribed below.

Only polysaccharides that comply with the following requirements may be used in the preparation of the conjugate.

Identification. Each polysaccharide is identified by an immunochemical method (*2.7.1*) or other suitable methods, for example ^{1}H nuclear magnetic resonance spectrometry (*2.2.33*).

Protein (*2.5.16*): depending on the serotype used, not more than the limit approved for the product, calculated with reference to the dried substance.

Nucleic acid (*2.5.17*): depending on the serotype used, not more than the limit approved for the product, calculated with reference to the dried substance.

Molecular size. The molecular size is evaluated by liquid chromatography (*2.2.29*) with multiple-angle laser light scattering detection (MALLS) or other suitable methods, such as size-exclusion chromatography (*2.2.30*) using *cross-linked agarose for chromatography R* or *cross-linked agarose for chromatography R1*. The values are within the limits approved for each serotype. A validated determination of the degree of polymerisation or of the weight-average molecular weight and the dispersion of molecular masses may be used instead of the determination of molecular-size distribution.

Bacterial endotoxins (*2.6.14*): less than 0.5 IU of endotoxin per microgram of polysaccharide.

Residual reagents. Where applicable, suitable tests are carried out to determine residues of reagents used during inactivation and purification. An acceptable value for each reagent is established for the particular product and each batch of polysaccharide must be shown to comply with this limit. Where validation studies have demonstrated removal of residual reagents, the test on polysaccharides may be omitted.

Water. Where applicable, the values are within the limits approved for each serotype, determined by a suitable method.

Depending on the chemical composition of a pneumococcal polysaccharide serotype, not all of the following tests may be applicable. The values are within the limits approved. Suitable limits for some pneumococcal polysaccharide serotypes are given in the monograph *Pneumococcal polysaccharide vaccine (0966)*.

Total nitrogen (*2.5.9*).

Phosphorus (*2.5.18*).

Uronic acids (*2.5.22*).

Hexosamines (*2.5.20*).

Methylpentoses (*2.5.21*).

***O*-Acetyl groups** (*2.5.19*).

MODIFIED PNEUMOCOCCAL POLYSACCHARIDES

Before conjugation, the polysaccharide can be depolymerised by chemical or mechanical means followed by a concentration step to obtain polysaccharides of a desired molecular size range. Polysaccharides or depolymerised polysaccharides are modified by an activation process.

Only modified polysaccharides that comply with the following requirements may be used in the preparation of the conjugate.

Molecular size. In the case of a size-reduced modified pneumococcal polysaccharide, the molecular size is evaluated by liquid chromatography (*2.2.29*) with MALLS detection or other suitable methods, such as size-exclusion chromatography (*2.2.30*) using *cross-linked agarose for chromatography R* or *cross-linked agarose for chromatography R1*. The values are within the limits approved for each serotype.

Degree of oxidation. Where applicable, the degree of oxidation is represented by the ratio of moles of saccharide repeat unit per mole of aldehyde and determined by a suitable method. The values are within the limits approved for each serotype.

CARRIER PROTEIN

The carrier protein is produced by culture of suitable (including inducible recombinant) micro-organisms; the bacterial purity of the culture is verified. The culture is inactivated. The carrier protein is purified by a suitable method. Suitable tests are carried out, for validation or routinely, to demonstrate that, where applicable, the product is free from specific toxins.

Where diphtheria toxoid is used, it is produced as described in the monograph *Diphtheria vaccine (adsorbed) (0443)* and complies with the requirements prescribed therein for bulk purified toxoid, except that the test for sterility (*2.6.1*) is not required.

Where CRM 197 is used as the carrier protein, it is not less than 90 per cent pure, determined by a suitable method.

Where tetanus toxoid is used as the carrier protein, it is produced as described in the monograph *Tetanus vaccine (adsorbed) (0452)* and complies with the requirements prescribed therein for purified bulk toxoid, except that the antigenic purity (*2.7.27*) is not less than 1500 Lf per milligram of protein nitrogen and that the test for sterility (*2.6.1*) is not required.

Where protein D is used, a specific strain of *Escherichia coli* is modified by a plasmid carrying the protein D coding sequence in order to express this outer-surface protein of *Haemophilus influenzae*. The modified strain is grown in a suitable liquid medium to express protein D. At the end of cultivation, protein D is purified and sterilised by suitable methods. The product contains not less than 95 per cent of protein D.

Only a carrier protein that complies with the following requirements may be used in the preparation of the conjugate.

Identification. The carrier protein is identified by a suitable immunochemical method (*2.7.1*).

Bacterial endotoxins (*2.6.14*): less than 1 IU per microgram of protein.

Carrier protein: not less than 90 per cent of the total protein content, determined by a suitable method.

MONOVALENT BULK CONJUGATE

The conjugate is obtained by the covalent binding of activated polysaccharides to the carrier protein.

The conjugate purification procedures are designed to remove residual reagents used for conjugation. The removal of residual reagents is confirmed by suitable tests or by validation of the purification process.

Only a bulk conjugate that complies with the following requirements may be used in the preparation of the final bulk vaccine. For each test, limits of acceptance are established and each batch of conjugate must be shown to comply with these limits.

Saccharide. The polysaccharide content is determined by a suitable physical or chemical method or by an immunochemical method (*2.7.1*). The value complies with the requirement approved for each serotype.

Protein. The protein content is determined by a suitable physical or chemical method (for example, *2.5.16*). The value complies with the requirement approved for each serotype.

Saccharide-to-protein ratio. Determine the saccharide-to-protein ratio by calculation. The value complies with the requirement approved for each serotype.

Free saccharide. Unbound polysaccharide is determined after removal of the conjugate, for example by anion-exchange, size-exclusion or hydrophobic chromatography, ultrafiltration, or other validated methods. A value consistent with adequate immunogenicity as shown in clinical trials is established for each serotype and each lot must be shown to comply with this limit.

Free carrier protein. Determine the content by a suitable method, either directly or by deriving the content by calculation from the results of other tests. The value complies with the requirement approved for each serotype.

Molecular size. The molecular size is evaluated by liquid chromatography (*2.2.29*) with MALLS detection or other suitable methods. The values are within the limits approved for each serotype.

Residual reagents. Where applicable, suitable tests are carried out to determine residues of reagents used during inactivation and purification. An acceptable value for each reagent is established for the particular product and each batch of conjugate must be shown to comply with this limit. Where validation studies have demonstrated removal of residual reagents, the test on conjugate polysaccharides may be omitted.

Sterility (*2.6.1*). It complies with the test for sterility, carried out using 10 mL for each medium or the equivalent of 100 doses for each medium, whichever is less.

Bacterial endotoxins (*2.6.14*): less than 0.75 IU of endotoxin per microgram of polysaccharide.

ADSORBED MONOVALENT BULK CONJUGATE

An aluminium-containing adjuvant may be added to each of the monovalent bulk conjugates prior to formulation of the final bulk. Once the conjugates are adsorbed on a sterile adjuvant, sterility is assured by aseptic processing.

Only an adsorbed monovalent bulk conjugate that complies with the following requirements may be used in the preparation of the final bulk vaccine.

Identification. Each adsorbed polysaccharide conjugate is identified by an immunochemical method (*2.7.1*) or other suitable methods.

Sterility (*2.6.1*). It complies with the test for sterility, carried out using 10 mL or the equivalent of 100 doses for each medium, whichever is less.

Saccharide. The polysaccharide content is determined by a suitable physical or chemical method or by an immunochemical method (*2.7.1*). The value complies with the requirement approved for each serotype.

Free saccharide. Centrifuge the adsorbed monovalent bulk conjugate. In the supernatant the unbound polysaccharide is determined after removal of the conjugate, for example by anion-exchange, size-exclusion or hydrophobic liquid chromatography, ultrafiltration, or other validated methods. An acceptable value consistent with adequate immunogenicity as shown in clinical trials is established for each serotype and each lot must be shown to comply with this limit.

Degree of adsorption. The degree of adsorption of each polysaccharide conjugate is assessed.

FINAL BULK VACCINE

A final bulk vaccine may be formulated from the individually adsorbed monovalent bulk conjugates, or from the mixture of the monovalent bulk conjugates that is adsorbed on an aluminium-containing adjuvant.

Where a final bulk vaccine is formulated as a release intermediate, it complies with the following requirements and is within the limits approved for the particular product.

Only a final bulk vaccine that complies with the following requirements may be used in the preparation of the final lot.

Sterility (*2.6.1*). It complies with the test for sterility, carried out using 10 mL or the equivalent of 100 doses for each medium, whichever is less.

FINAL LOT

Only a final lot that is within the limits approved for the particular product and is satisfactory with respect to each of the requirements given below under Identification, Tests and Assay may be released for use.

IDENTIFICATION

Each polysaccharide present in the vaccine is identified by a suitable immunochemical method (*2.7.1*).

TESTS

Aluminium (*2.5.13*): maximum 1.25 mg per single human dose.

Sterility (*2.6.1*). It complies with the test for sterility.

Bacterial endotoxins (*2.6.14*): less than 12.5 IU per single human dose, unless otherwise justified and authorised.

ASSAY

Saccharide content. The polysaccharide content for each serotype is determined by a suitable immunochemical method (for example, nephelometry assay or enzyme-linked immunosorbent assay (ELISA)). The vaccine contains not less than 70 per cent and not more than 130 per cent of the quantity stated on the label for each polysaccharide. The confidence limits (P = 0.95) are not less than 80 per cent and not more than 120 per cent of the estimated content.

LABELLING

The label states:

- the pneumococcal serotype and carrier protein present in each single human dose;
- the number of micrograms of each polysaccharide per single human dose;
- the number of micrograms of carrier protein per single human dose;
- if applicable, the name and amount of adsorbent;
- if applicable, that the vaccine must be shaken before use;
- if applicable, that the vaccine must not be frozen.

01/2008:0966

PNEUMOCOCCAL POLYSACCHARIDE VACCINE

Vaccinum pneumococcale polysaccharidicum

DEFINITION

Pneumococcal polysaccharide vaccine consists of a mixture of equal parts of purified capsular polysaccharide antigens prepared from suitable pathogenic strains of *Streptococcus pneumoniae* whose capsules have been shown to be made up of polysaccharides that are capable of inducing satisfactory levels of specific antibodies in man. It contains the 23 immunochemically different capsular polysaccharides listed in Table 0966-1.

The vaccine is a clear, colourless liquid.

PRODUCTION

Production of the vaccine is based on a seed-lot system for each type. The production method shall have been shown to yield consistently pneumococcal polysaccharide vaccines of adequate safety and immunogenicity in man.

The production method is validated to demonstrate that the product, if tested, would comply with the test for abnormal toxicity for immunosera and vaccines for human use (*2.6.9*) modified as follows for the test in guinea-pigs: inject 10 human doses into each guinea-pig and observe for 12 days.

MONOVALENT BULK POLYSACCHARIDES

The bacteria are grown in a suitable liquid medium that does not contain blood-group substances or high-molecular-mass polysaccharides. The bacterial purity of the culture is verified and the culture is inactivated with phenol. Impurities are removed by such techniques as fractional precipitation, enzymatic digestion and ultrafiltration. The polysaccharide is obtained by fractional precipitation, washed, and dried in a vacuum to a residual moisture content shown to be favourable to the stability of the polysaccharide. The residual moisture content is determined by drying under reduced pressure over diphosphorus pentoxide or by thermogravimetric analysis and the value obtained is used to calculate the results of the tests shown below with reference to the dried substance. The monovalent bulk polysaccharide is stored at a suitable temperature in conditions that avoid the uptake of moisture.

Only a monovalent bulk polysaccharide that complies with the following requirements may be used in the preparation of the final bulk vaccine. Percentage contents of components, determined by the methods prescribed below, are shown in Table 0966-1.

Protein (*2.5.16*).

Nucleic acids (*2.5.17*).

Total nitrogen (*2.5.9*).

Phosphorus (*2.5.18*).

Molecular size. Determine by size-exclusion chromatography (*2.2.30*) using *cross-linked agarose for chromatography R* or *cross-linked agarose for chromatography R1*.

Uronic acids (*2.5.22*).

Hexosamines (*2.5.20*).

Methylpentoses (*2.5.21*).

***O*-Acetyl groups** (*2.5.19*).

Identification (*2.7.1*). Confirm the identity of the monovalent bulk polysaccharide by double immunodiffusion or electroimmunodiffusion (except for polysaccharides 7F, 14 and 33F), using specific antisera.

Specificity. No reaction occurs when the antigens are tested against all the antisera specific for the other polysaccharides of the vaccine, including factor sera for distinguishing types within groups. The polysaccharides are tested at a concentration of 50 µg/mL using a method capable of detecting 0.5 µg/mL.

FINAL BULK VACCINE

The final bulk vaccine is obtained by aseptically mixing the different polysaccharide powders. The uniform mixture is aseptically dissolved in a suitable isotonic solution so that one human dose of 0.50 mL contains 25 µg of each polysaccharide. An antimicrobial preservative may be added. The solution is sterilised by filtration through a bacteria-retentive filter.

Only a final bulk vaccine that complies with the following requirements may be used in the preparation of the final lot.

Antimicrobial preservative. Where applicable, determine the amount of antimicrobial preservative by a suitable chemical method. The content is not less than 85 per cent and not greater than 115 per cent of the intended amount.

Table 0966.-1 – *Percentage contents of components of monovalent bulk polysaccharides*

Molecular type*	Protein	Nucleic acids	Total nitrogen	Phosphorus	Molecular size (K_0)		Uronic acids	Hexos-amines	Methyl-pentoses	*O*-acetyl Groups
					**	***				
1	≤ 2	≤ 2	3.5-6	0-1.5	≤ 0.15		≥ 45			≥ 1.8
2	≤ 2	≤ 2	0-1	0-1.0	≤ 0.15		≥ 15		≥ 38	
3	≤ 5	≤ 2	0-1	0-1.0	≤ 0.15		≥ 40			
4	≤ 3	≤ 2	4-6	0-1.5	≤ 0.15			≥ 40		
5	≤ 7.5	≤ 2	2.5-6.0	≤ 2		≤ 0.60	≥ 12	≥ 20		
6B	≤ 2	≤ 2	0-2	2.5-5.0		≤ 0.50			≥ 15	
7F	≤ 5	≤ 2	1.5-4.0	0-1.0	≤ 0.20				≥13	
8	≤ 2	≤ 2	0-1	0-1.0	≤ 0.15		≥ 25			
9N	≤ 2	≤ 1	2.2-4	0-1.0	≤ 0.20		≥ 20	≥ 28		
9V	≤ 2	≤ 2	0.5-3	0-1.0		≤ 0.45	≥ 15	≥ 13		
10A	≤ 7	≤ 2	0.5-3.5	1.5-3.5		≤ 0.65		≥ 12		
11A	≤ 3	≤ 2	0-2.5	2.0-5.0		≤ 0.40				≥ 9
12F	≤ 3	≤ 2	3-5	0-1.0	≤ 0.25			≥ 25		
14	≤ 5	≤ 2	1.5-4	0-1.0	≤ 0.30			≥ 20		
15B	≤ 3	≤ 2	1-3	2.0-4.5		≤0.55		≥ 15		
17A or17F	≤ 2	≤ 2	0-1.5	0-3.5		≤ 0.45			≥ 20	
18C	≤ 3	≤ 2	0-1	2.4-4.9	≤ 0.15				≥ 14	
19A	≤ 2	≤ 2	0.6-3.5	3.0-7.0	≤ 0.45			≥ 12	≥ 20	
19F	≤ 3	≤ 2	1.4-3.5	3.0-5.5	≤ 0.20			≥ 12.5	≥ 20	
20	≤ 2	≤ 2	0.5-2.5	1.5-4.0		≤ 0.60		≥ 12		
22F	≤ 2	≤ 2	0-2	0-1.0		≤ 0.55	≥ 15		≥ 25	
23F	≤ 2	≤ 2	0-1	3.0-4.5	≤ 0.15				≥ 37	
33F	≤ 2.5	≤ 2	0-2	0-1.0		≤ 0.50				

* The different types are indicated using the Danish nomenclature.

** *Cross-linked agarose for chromatography R.*

*** *Cross-linked agarose for chromatography R1.*

Sterility (*2.6.1*). The final bulk vaccine complies with the test for sterility, using 10 mL for each medium.

FINAL LOT

The final bulk vaccine is distributed aseptically into sterile, tamper-proof containers.

Only a final lot that is satisfactory with respect to each of the requirements given below under identification, tests and assay may be released for use. Provided that the tests for phenol and for antimicrobial preservative have been carried out with satisfactory results on the final bulk vaccine, they may be omitted on the final lot. When consistency of production has been established on a suitable number of consecutive batches, the assay may be replaced by a qualitative test that identifies each polysaccharide, provided that an assay has been performed on each monovalent bulk polysaccharide used in the preparation of the final lot.

IDENTIFICATION

The assay serves also to identify the vaccine.

TESTS

pH (*2.2.3*). The pH of the vaccine is 4.5 to 7.4.

Antimicrobial preservative. Where applicable, determine the amount of antimicrobial preservative by a suitable chemical method. The content is not less than the minimum amount shown to be effective and is not greater than 115 per cent of the quantity stated on the label.

Phenol (*2.5.15*). Not more than 2.5 g/L.

Sterility (*2.6.1*). It complies with the test for sterility.

Pyrogens (*2.6.8*). It complies with the test for pyrogens. Inject per kilogram of the rabbit's mass 1 mL of a dilution of the vaccine containing 2.5 µg/mL of each polysaccharide.

ASSAY

Determine the content of each polysaccharide by a suitable immunochemical method (*2.7.1*), using antisera specific for each polysaccharide contained in the vaccine, including factor sera for types within groups, and purified polysaccharides of each type as standards.

The vaccine contains not less than 70 per cent and not more than 130 per cent of the quantity stated on the label for each polysaccharide. The confidence limits (P = 0.95) are not less than 80 per cent and not more than 120 per cent of the estimated content.

LABELLING

The label states:

- the number of micrograms of each polysaccharide per human dose,
- the total amount of polysaccharide in the container.

04/2010:0214

POLIOMYELITIS VACCINE (INACTIVATED)

Vaccinum poliomyelitidis inactivatum

DEFINITION

Poliomyelitis vaccine (inactivated) is a liquid preparation of suitable strains of human poliovirus types 1, 2 and 3 grown in suitable cell cultures and inactivated by a validated method. It is a clear liquid that may be coloured owing to the presence of a pH indicator.

PRODUCTION

The production method shall have been shown to yield consistently vaccines of acceptable safety and immunogenicity in man.

Production of the vaccine is based on a virus seed-lot system. Cell lines are used according to a cell-bank system. If primary, secondary or tertiary monkey kidney cells are used, production complies with the requirements indicated below.

Unless otherwise justified and authorised, the virus in the final vaccine shall not have undergone more passages from the master seed lot than was used to prepare the vaccine shown in clinical studies to be satisfactory with respect to safety and efficacy.

The production method is validated to demonstrate that the product, if tested, would comply with the test for abnormal toxicity for immunosera and vaccines for human use (*2.6.9*).

SUBSTRATE FOR VIRUS PROPAGATION

The virus is propagated in a human diploid cell line (*5.2.3*), in a continuous cell line (*5.2.3*) or in primary, secondary or tertiary monkey kidney cells.

Primary, secondary or tertiary monkey kidney cells. The following special requirements for the substrate for virus propagation apply to primary, secondary or tertiary monkey kidney cells.

Monkeys used in the preparation of kidney cell cultures for production and control of the vaccine. The animals used are of a species approved by the competent authority, in good health and, unless otherwise justified and authorised, have not been previously employed for experimental purposes. Kidney cells used for vaccine production and control are derived from monitored, closed colonies of monkeys bred in captivity, not from animals caught in the wild; a previously approved seed lot prepared using virus passaged in cells from wild monkeys may, subject to approval by the competent authority, be used for vaccine production if historical data on safety justify this.

Monitored, closed colonies of monkeys. The monkeys are kept in groups in cages. Freedom from extraneous agents is achieved by the use of animals maintained in closed colonies that are subject to continuous and systematic veterinary and laboratory monitoring for the presence of infectious agents. The supplier of animals is certified by the competent authority. Each monkey is tested serologically at regular intervals during a quarantine period of not less than 6 weeks imposed before entering the colony, and then during its stay in the colony.

The monkeys used are shown to be tuberculin-negative and free from antibodies to simian virus 40 (SV40) and simian immunodeficiency virus. The blood sample used in testing for SV40 antibodies must be taken as close as possible to the time of removal of the kidneys. If *Macaca* sp. monkeys are used for production, the monkeys are also shown to be free from antibodies to herpesvirus B (cercopithecine herpesvirus 1) infection. Human herpesvirus 1 has been used as an indicator for freedom from herpesvirus B antibodies on account of the danger of handling herpesvirus B (cercopithecine herpesvirus 1).

Monkeys from which kidneys are to be removed are thoroughly examined, particularly for evidence of tuberculosis and herpesvirus B (cercopithecine herpesvirus 1) infection. If a monkey shows any pathological lesion relevant to the use of its kidneys in the preparation of a seed lot or vaccine, it is not to be used nor are any of the remaining monkeys of the group concerned unless it is evident that their use will not impair the safety of the product.

All the operations described in this section are conducted outside the area where the vaccine is produced.

Monkey cell cultures for vaccine production. Kidneys that show no pathological signs are used for preparing cell cultures. Each group of cell cultures derived from a single monkey forms a separate production cell culture giving rise to a separate single harvest.

The primary monkey kidney cell suspension complies with the test for mycobacteria (*2.6.2*); disrupt the cells before carrying out the test.

If secondary or tertiary cells are used, it shall be demonstrated by suitable validation tests that cell cultures beyond the passage level used for production are free from tumorigenicity.

SEED LOTS

Each of the 3 strains of poliovirus used shall be identified by historical records that include information on the origin of the strain and its subsequent manipulation.

Only a working seed lot that complies with the following requirements may be used for virus propagation.

Identification. Each working seed lot is identified as human poliovirus types 1, 2 or 3 by virus neutralisation in cell cultures using specific antibodies.

Virus concentration. The virus concentration of each working seed lot is determined to define the quantity of virus to be used for inoculation of production cell cultures.

Extraneous agents. The working seed lot complies with the requirements for seed lots for virus vaccines (*2.6.16*). In addition, if primary, secondary or tertiary monkey kidney cells have been used for isolation of the strain, measures are taken to ensure that the strain is not contaminated with simian viruses such as simian immunodeficiency virus, simian virus 40, filoviruses and herpesvirus B (cercopithecine herpesvirus 1). A working seed lot produced in primary, secondary or tertiary monkey kidney cells complies with the requirements given below under Virus propagation and harvest for single harvests produced in such cells.

PROPAGATION AND HARVEST

All processing of the cell bank and cell cultures is done under aseptic conditions in an area where no other cells or viruses are being handled. Approved animal serum (but not human serum) may be used in the cell culture media. Serum and trypsin used in the preparation of cell suspensions and media are shown to be free from extraneous agents. The cell culture media may contain a pH indicator such as phenol red and approved antibiotics at the lowest effective concentration. Not less than 500 mL of the cell cultures employed for vaccine production is set aside as uninfected cell cultures (control cells); where continuous cell lines in a fermenter are used for production, 200×10^6 cells are set aside to prepare control cells; where primary, secondary or tertiary monkey kidney cells are used for production, a cell sample equivalent to at least 500 mL of the cell suspension, at the concentration employed for vaccine production, is taken to prepare control cells.

Only a single harvest that complies with the following requirements may be used in the preparation of the vaccine. The tests for identification and bacterial and fungal contamination may be carried out instead on the purified, pooled monovalent harvest. After demonstration of consistency of production at the stage of the single harvest, the test for virus concentration may be carried out instead on the purified, pooled monovalent harvest.

Control cells. The control cells of the production cell culture comply with a test for identification (if a cell-bank system is used for production) and with the requirements for extraneous agents (*2.6.16*; where primary, secondary or tertiary monkey kidney cells are used, the tests in cell cultures are carried out as shown below under Test in rabbit kidney cell cultures and Test in cercopithecus kidney cell cultures).

Test in rabbit kidney cell cultures. Test a sample of at least 10 mL of the pooled supernatant fluid from the control cultures for the absence of herpesvirus B (cercopithecine herpesvirus 1) and other viruses by inoculation onto rabbit kidney cell cultures. The dilution of supernatant in the nutrient medium is not greater than 1/4 and the area of the cell layer is at least 3 cm^2 per millilitre of inoculum. Set aside one or more containers of each batch of cells with the same medium as non-inoculated control cells. Incubate the cultures at 37 °C and observe for at least 2 weeks. The test is not valid if more than 20 per cent of the control cell cultures are discarded for non-specific, accidental reasons.

Test in cercopithecus kidney cell cultures. Test a sample of at least 10 mL of the pooled supernatant fluid from the control cultures for the absence of SV40 virus and other extraneous agents by inoculation onto cell cultures prepared from the kidneys of cercopithecus monkeys, or other cells shown to be at least as sensitive for SV40, by the method described under Test in rabbit kidney cell cultures. The test is not valid if more than 20 per cent of the control cell cultures are discarded for non-specific, accidental reasons.

Identification. The single harvest is identified as containing human poliovirus types 1, 2 or 3 by virus neutralisation in cell cultures using specific antibodies.

Virus concentration. The virus concentration of each single harvest is determined by titration of infectious virus in cell cultures.

Bacterial and fungal contamination. The single harvest complies with the test for sterility (*2.6.1*), carried out using 10 mL for each medium.

Mycoplasmas (*2.6.7*). The single harvest complies with the test for mycoplasmas, carried out using 10 mL.

Test in rabbit kidney cell cultures. Where primary, secondary or tertiary monkey kidney cells are used for production, test a sample of at least 10 mL of the single harvest for the absence of herpesvirus B (cercopithecine herpesvirus 1) and other viruses by inoculation onto rabbit kidney cell cultures as described above for the control cells.

Test in cercopithecus kidney cell cultures. Where primary, secondary or tertiary monkey kidney cells are used for production, test a sample of at least 10 mL of the single harvest for the absence of SV40 virus and other extraneous agents. Neutralise the sample by a high-titre antiserum against the specific type of poliovirus. Test the sample in primary cercopithecus kidney cell cultures or cells that have been demonstrated to be at least as susceptible for SV40. Incubate the cultures at 37 °C and observe for 14 days. At the end of this period, make at least one subculture of fluid in the same cell culture system and observe both primary cultures and subcultures for an additional 14 days.

PURIFICATION AND PURIFIED MONOVALENT HARVEST

Several single harvests of the same type may be pooled and may be concentrated. The monovalent harvest or pooled monovalent harvest is purified by validated methods. If continuous cell lines are used for production, the purification process shall have been shown to reduce consistently the content of substrate-cell DNA to not more than 100 pg per single human dose.

Only a purified monovalent harvest that complies with the following requirements may be used for the preparation of the inactivated monovalent harvest.

Identification. The virus is identified by virus neutralisation in cell cultures using specific antibodies or by determination of D-antigen.

Virus concentration. The virus concentration is determined by titration of infectious virus.

Specific activity. The ratio of the virus concentration or the D-antigen content, determined by a suitable immunochemical method (*2.7.1*), to the total protein content (specific activity) of the purified monovalent harvest is within the limits approved for the particular product.

INACTIVATION AND INACTIVATED MONOVALENT HARVEST

Several purified monovalent harvests of the same type may be mixed before inactivation. To avoid failures in inactivation caused by the presence of virus aggregates, filtration is carried out before and during inactivation; inactivation is started within a suitable period, preferably not more than 24 h and in any case not more than 72 h, of the prior filtration. The virus suspension is inactivated by a validated method that has been shown to inactivate poliovirus without destruction of immunogenicity; during validation studies, an inactivation curve with at least 4 points (for example, time 0 h, 24 h, 48 h and 96 h) is established showing the decrease in concentration of live virus with time. If formaldehyde is used for inactivation, the presence of an excess of formaldehyde at the end of the inactivation period is verified. The inactivation kinetics tests mentioned below are carried out on each batch to ensure consistency of the inactivation process.

Only an inactivated monovalent harvest that complies with the following requirements may be used in the preparation of a trivalent pool of inactivated monovalent harvests or a final bulk vaccine.

Test for effective inactivation. After neutralisation of the formaldehyde with sodium bisulfite (where applicable), verify the absence of residual live poliovirus by inoculation on suitable cell cultures of 2 samples of each inactivated monovalent harvest, corresponding to at least 1500 human doses. Cells used for the test must be of optimal sensitivity regarding residual infectious poliovirus, for example kidney cells from certain monkey species (*Macaca*, *Cercopithecus* or *Papio*), or Hep-2 cells. If other cells are used, they must have been shown to possess at least the same sensitivity as those specified above. Take one sample not later than 3/4 of the way through the inactivation period and the other at the end. Inoculate the samples in cell cultures such that the dilution of vaccine in the nutrient medium is not greater than 1/4 and the area of the cell layer is at least 3 cm^2 per millilitre of inoculum. Set aside one or more containers with the same medium as non-inoculated control cells. Observe the cell cultures for at least 3 weeks. Make not fewer than 2 passages from each container, one at the end of the observation period and the other 1 week before; for the passages, use cell culture supernatant and inoculate as for the initial sample. Observe the subcultures for at least 2 weeks. No sign of poliovirus multiplication is present in the cell cultures. At the end of the observation period, test the susceptibility of the cell culture used by inoculation of live poliovirus of the same type as that present in the inactivated monovalent harvest.

Inactivation kinetics. Kinetics of inactivation are established and approved by the competent authority. Adequate data on inactivation kinetics are obtained and consistency of the inactivation process is monitored.

Sterility (*2.6.1*). The inactivated monovalent harvest complies with the test for sterility, carried out using 10 mL for each medium.

D-antigen content. The content of D-antigen determined by a suitable immunochemical method (*2.7.1*) is within the limits approved for the particular preparation.

FINAL BULK VACCINE

The final bulk vaccine is prepared directly from the inactivated monovalent harvests of human poliovirus types 1, 2 and 3 or from a trivalent pool of inactivated monovalent harvests. A suitable stabiliser and a suitable antimicrobial preservative may be added.

Only a final bulk vaccine that complies with the following requirements may be used in the preparation of the final lot.

Sterility (*2.6.1*). The final bulk vaccine complies with the test for sterility, carried out using 10 mL for each medium.

Antimicrobial preservative. Where applicable, determine the amount of antimicrobial preservative by a suitable chemical or physicochemical method. The amount is not less than 85 per cent and not greater than 115 per cent of the intended amount.

FINAL LOT

Only a final lot that complies with each of the requirements given below under Identification, Tests and Assay may be released for use. Provided that the tests for free formaldehyde and antimicrobial preservative and the *in vivo* assay have been performed with satisfactory results on the final bulk vaccine, they may be omitted on the final lot.

The *in vivo* assay may be omitted once it has been demonstrated for a given product and for each poliovirus type that the acceptance criteria for the D-antigen determination are such that it yields the same result as the *in vivo* assay in terms of acceptance or rejection of a batch. This demonstration must include testing of subpotent batches, produced experimentally if necessary, for example by heat treatment or other means of diminishing the immunogenic activity. Where there is a significant change in the manufacturing process of the antigens or their formulation, any impact on the *in vivo* and *in vitro* assays must be evaluated, and the need for revalidation considered.

Provided that the protein content has been determined on the purified monovalent harvests or on the inactivated monovalent harvests and that it has been shown that the content in the final lot will not exceed 10 µg per single human dose, the test for protein content may be omitted on the final lot.

Provided that the test for bovine serum albumin has been performed with satisfactory results on the trivalent pool of inactivated monovalent harvests or on the final bulk vaccine, it may be omitted on the final lot.

IDENTIFICATION

The vaccine is shown to contain human poliovirus types 1, 2 and 3 by a suitable immunochemical method (*2.7.1*) such as the determination of D-antigen by enzyme-linked immunosorbent assay (ELISA).

TESTS

Free formaldehyde (*2.4.18*): maximum 0.2 g/L.

Antimicrobial preservative. Where applicable, determine the amount of antimicrobial preservative by a suitable chemical or physicochemical method. The amount is not less than the minimum amount shown to be effective and is not greater than 115 per cent of that stated on the label.

Protein content (*2.5.33, Method 2*): maximum 10 µg per single human dose.

Bovine serum albumin: maximum 50 ng per single human dose, determined by a suitable immunochemical method (*2.7.1*).

Sterility (*2.6.1*). It complies with the test.

Bacterial endotoxins (*2.6.14*): less than 5 IU per single human dose.

ASSAY

D-antigen content. As a measure of consistency of production, determine the D-antigen content for human poliovirus types 1, 2 and 3 by a suitable immunochemical method (*2.7.1*) using a reference preparation calibrated in European Pharmacopoeia Units of D-antigen. For each type, the content, expressed with reference to the amount of D-antigen stated on the label, is within the limits approved for the particular product. *Poliomyelitis vaccine (inactivated) BRP* is calibrated in European Pharmacopoeia Units and intended for use in the assay of D-antigen. The European Pharmacopoeia Unit and the International Unit are equivalent.

***In vivo* test**. The vaccine complies with the *in vivo* assay of poliomyelitis vaccine (inactivated) (*2.7.20*).

LABELLING

The label states:

- the types of poliovirus contained in the vaccine;
- the nominal amount of virus of each type (1, 2 and 3), expressed in European Pharmacopoeia Units of D-antigen, per single human dose;
- the cell substrate used to prepare the vaccine.

01/2012:0215

POLIOMYELITIS VACCINE (ORAL)

Vaccinum poliomyelitidis perorale

DEFINITION

Oral poliomyelitis vaccine is a preparation of approved strains of live attenuated poliovirus type 1, 2 or 3 grown in *in vitro* cultures of approved cells, containing any one type or any combination of the 3 types of Sabin strains, presented in a form suitable for oral administration.

The vaccine is a clear liquid that may be coloured owing to the presence of a pH indicator.

PRODUCTION

The vaccine strains and the production method shall have been shown to yield consistently vaccines that are both immunogenic and safe in man.

The production of vaccine is based on a virus seed-lot system. Cell lines are used according to a cell-bank system. If primary monkey kidney cell cultures are used, production complies with the requirements indicated below. Unless otherwise justified and authorised, the virus in the final vaccine shall not have undergone more than 2 passages from the master seed lot.

REFERENCE STANDARDS

Poliomyelitis vaccine (oral) BRP is suitable for use as a virus reference preparation for the assay.

The International Standards for poliovirus type 2 (Sabin) for MAPREC (Mutant Analysis by PCR and Restriction Enzyme Cleavage) assays and poliovirus, type 3 (Sabin) synthetic DNA for MAPREC assays are suitable for use in the tests for genetic markers and the molecular tests for consistency of production.

Reference preparations of each poliovirus type at the Sabin Original + 2 passage level, namely WHO (SO + 2)/I for type 1 virus, WHO (SO + 2)/II for type 2 virus and WHO (SO + 2)/III for type 3 virus are available for comparison of the *in vivo* neurovirulence with that of homotypic vaccines. Requests for the WHO reference preparations for *in vivo* neurovirulence tests are to be directed to WHO, Biologicals, Geneva, Switzerland.

A suitable reference preparation is to be included in each test.

SUBSTRATE FOR VIRUS PROPAGATION

The virus is propagated in human diploid cells (*5.2.3*), in continuous cell lines (*5.2.3*) or in primary monkey kidney cell cultures (including serially passaged cells from primary monkey kidney cells).

Primary monkey kidney cell cultures. *The following special requirements for the substrate for virus propagation apply to primary monkey kidney cell cultures.*

Monkeys used for preparation of primary monkey kidney cell cultures and for testing of virus. If the vaccine is prepared in primary monkey kidney cell cultures, animals of a species approved by the competent authority, in good health, kept in closed or intensively monitored colonies and not previously employed for experimental purposes shall be used.

The monkeys shall be kept in well-constructed and adequately ventilated animal rooms in cages spaced as far apart as possible. Adequate precautions shall be taken to prevent cross-infection between cages. Not more than 2 monkeys shall be housed per cage and cage-mates shall not be interchanged. The monkeys shall be kept in the country of manufacture of the vaccine in quarantine groups for a period of not less than 6 weeks before use. A quarantine group is a colony of selected, healthy monkeys kept in one room, with separate feeding and cleaning facilities, and having no contact with other monkeys during the quarantine period. If at any time during the quarantine period the overall death rate of a shipment consisting of one or more groups reaches 5 per cent (excluding deaths from accidents or where the cause was specifically determined not to be an infectious disease), monkeys from that entire shipment shall continue in quarantine from that time for a minimum of 6 weeks. The groups shall be kept continuously in isolation, as in quarantine, even after completion of the quarantine period, until the monkeys are used. After the last monkey of a group has been taken, the room that housed the group shall be thoroughly cleaned and decontaminated before being used for a fresh group. If kidneys from near-term monkeys are used, the mother is quarantined for the term of pregnancy.

Monkeys from which kidneys are to be removed shall be anaesthetised and thoroughly examined, particularly for evidence of tuberculosis and cercopithecid herpesvirus 1 (B virus) infection.

If a monkey shows any pathological lesion relevant to the use of its kidneys in the preparation of a seed lot or vaccine, it shall not be used, nor shall any of the remaining monkeys of the quarantine group concerned be used unless it is evident that their use will not impair the safety of the product.

All the operations described in this section shall be conducted outside the areas where the vaccine is produced.

The monkeys used shall be shown to be free from antibodies to simian virus 40 (SV40), simian immunodeficiency virus and spumaviruses. The blood sample used in testing for SV40 antibodies must be taken as close as possible to the time of removal of the kidneys. If *Macaca* spp. are used for production, the monkeys shall also be shown to be free from antibodies to cercopithecid herpesvirus 1 (B virus). Human herpesvirus has been used as an indicator for freedom from B virus antibodies on account of the danger of handling cercopithecid herpesvirus 1 (B virus). Monkeys used for the production of new seed lots are shown to be free from antibodies to simian cytomegalovirus (sCMV).

Primary monkey kidney cell cultures for vaccine production. Kidneys that show no pathological signs are used for preparing cell cultures. If the monkeys are from a colony maintained for vaccine production, serially passaged monkey kidney cell cultures from primary monkey kidney cells may be used for virus propagation, otherwise the monkey kidney cells are not propagated in series. Virus for the preparation of vaccine is grown by aseptic methods in such cultures. If animal serum is used in the propagation of the cells, the maintenance medium after virus inoculation shall contain no added serum.

Each group of cell cultures derived from a single monkey or from foetuses from no more than 10 near-term monkeys is prepared and tested as an individual group.

VIRUS SEED LOTS

The strains of poliovirus used shall be identified by historical records that include information on the origin and subsequent manipulation of the strains.

Working seed lots are prepared by a single passage from a master seed lot and at an approved passage level from the original Sabin virus. Virus seed lots are prepared in large quantities and stored at a temperature below – 60 °C.

Only a virus seed lot that complies with the following requirements may be used for virus propagation.

Identification. Each working seed lot is identified as poliovirus of the given type, using specific antibodies.

Virus concentration. Determined by the method described below, the virus concentration is the basis for the quantity of virus used in the neurovirulence test.

Extraneous agents (*2.6.16*). If the working seed lot is produced in human diploid cells or in a continuous cell line, it complies with the requirements for seed lots for virus vaccines. If the working seed lot is produced in primary monkey kidney cell cultures, it complies with the requirements given below under Virus Propagation and Harvest and Monovalent Pooled Harvest and with the tests in adult mice, suckling mice and guinea-pigs given in chapter *2.6.16*.

In addition to the requirements in chapter *2.6.16*, for vaccines produced in cell lines and when the seed lot was produced in primary monkey kidney cell cultures, a validated test for sCMV is performed.

Working seed lots shall be free from detectable DNA sequences from simian virus 40 (SV40).

Neurovirulence. Each master and working seed lot complies with the test for neurovirulence of poliomyelitis vaccine (oral) in monkeys (*2.6.19*). In addition, at least the first 4 consecutive batches of monovalent pooled harvest prepared from these seed lots shall be shown to comply with the test for neurovirulence of poliomyelitis vaccine (oral) in monkeys (*2.6.19*) before the seed lot is deemed suitable for use. Furthermore, the seed lot shall cease to be used in vaccine production if the frequency of failure of the monovalent pooled harvests produced from it is greater than predicted statistically. This statistical prediction is calculated after each test on the basis of all the monovalent pooled harvests tested; it is equal to the probability of false rejection on the occasion of a first test (i.e.1 per cent), the probability of false rejection on retest being negligible. If the test is carried out only by the manufacturer, the test slides are provided to the control authority for assessment.

Genetic markers. Each working seed lot is tested for its replicating properties at temperatures ranging from 36 °C to 40 °C as described under Monovalent pooled harvest. A profile (i.e. percentage of mutant) of the seed virus using the MAPREC assay is prepared. Type 3 virus seed lots comply with the MAPREC assay as described under Monovalent pooled harvest.

VIRUS PROPAGATION AND HARVEST

All processing of the cell banks and subsequent cell cultures is done under aseptic conditions in an area where no other cells are handled during the production. Suitable animal (but not human) serum may be used in the culture media, but the final medium for maintaining cell growth during virus multiplication does not contain animal serum. Serum and trypsin used in the preparation of cell suspensions and media are shown to be free from live extraneous agents. The cell-culture medium may contain a pH indicator such as phenol red and suitable antibiotics at the lowest effective concentration. It is preferable to have a substrate free from antibiotics during production. On the day of inoculation with the virus working seed lot, not less than 5 per cent or 1000 mL, whichever is the less, of the cell cultures employed for vaccine production are set aside as uninfected cell cultures (control cells). Special requirements, given below, apply to

control cells when the vaccine is produced in primary monkey kidney cell cultures. The virus suspension is harvested not later than 4 days after virus inoculation. After inoculation of the production cell culture with the virus working seed lot, inoculated cells are maintained at a fixed temperature, shown to be suitable, within the range 33-35 °C; the temperature is maintained constant to ± 0.5 °C; control cell cultures are maintained at 33-35 °C for the relevant incubation periods.

Only a single virus harvest that complies with the following requirements may be used in the preparation of the monovalent pooled harvest.

Virus concentration. The virus concentration of virus harvests is determined as prescribed under Assay to monitor consistency of production and to determine the dilution to be used for the final bulk vaccine.

Molecular tests for consistency of production. The MAPREC assay is performed on each virus harvest. The acceptance/rejection criteria for consistency of production are determined for each manufacturer and for each working seed by agreement with the competent authority. These criteria are periodically reviewed and updated to the satisfaction of the competent authority. An investigation of consistency occurs if a virus harvest gives results that are inconsistent with previous production history.

Control cells. The control cells of the production cell culture from which the virus harvest is derived comply with a test for identity and with the requirements for extraneous agents (*2.6.16*) or, where primary monkey kidney cell cultures are used, as shown below.

Primary monkey kidney cell cultures. *The following special requirements apply to virus propagation and harvest in primary monkey kidney cell cultures.*

Cell cultures. On the day of inoculation with the virus working seed lot, each cell culture is examined for degeneration caused by an infective agent. If, in this examination, evidence is found of the presence in a cell culture of any extraneous agent, the entire group of cultures concerned shall be rejected.

On the day of inoculation with the virus working seed lot, a sample of at least 30 mL of the pooled fluid removed from the cell cultures of the kidneys of each single monkey or from foetuses from not more than 10 near-term monkeys is divided into 2 equal portions. 1 portion of the pooled fluid is tested in monkey kidney cell cultures prepared from the same species, but not the same animal, as that used for vaccine production. The other portion of the pooled fluid is, where necessary, tested in monkey kidney cell cultures from another species so that tests on the pooled fluids are done in cell cultures from at least 1 species known to be sensitive to SV40. The pooled fluid is inoculated into bottles of these cell cultures in such a way that the dilution of the pooled fluid in the nutrient medium does not exceed 1 in 4. The area of the cell sheet is at least 3 cm^2/mL of pooled fluid. At least 1 bottle of each type of cell culture remains uninoculated to serve as a control. If the monkey species used for vaccine production is known to be sensitive to SV40, a test in a 2nd species is not required. Animal serum may be used in the propagation of the cells, provided that it does not contain SV40 antibody, but the maintenance medium after inoculation of test material contains no added serum except as described below.

The cultures are incubated at a temperature of 35-37 °C and are observed for a total period of at least 4 weeks. During this observation period and after not less than 2 weeks' incubation, at least 1 subculture of fluid is made from each of these cultures in the same cell culture system. The subcultures are also observed for at least 2 weeks.

Serum may be added to the original culture at the time of subculturing, provided that the serum does not contain SV40 antibody.

Fluorescent-antibody techniques may be useful for detecting SV40 virus and other viruses in the cells.

A further sample of at least 10 mL of the pooled fluid is tested for cercopithecid herpesvirus 1 (B virus) and other viruses in rabbit kidney cell cultures. Serum used in the nutrient medium of these cultures shall have been shown to be free from inhibitors of B virus. Human herpesvirus has been used as an indicator for freedom from B virus inhibitors on account of the danger of handling cercopithecid herpesvirus 1 (B virus). The sample is inoculated into bottles of these cell cultures in such a way that the dilution of the pooled fluid in the nutrient medium does not exceed 1 in 4. The area of the cell sheet is at least 3 cm^2/mL of pooled fluid. At least 1 bottle of the cell cultures remains uninoculated to serve as a control.

The cultures are incubated at a temperature of 35-37 °C and observed for at least 2 weeks.

A further sample of 10 mL of the pooled fluid removed from the cell cultures on the day of inoculation with the seed lot virus is tested for the presence of extraneous agents by inoculation into human cell cultures sensitive to measles virus.

The tests are not valid if more than 20 per cent of the culture vessels have been discarded for non-specific accidental reasons by the end of the respective test periods.

If, in these tests, evidence is found of the presence of an extraneous agent, the single harvest from the whole group of cell cultures concerned is rejected.

If the presence of cercopithecid herpesvirus 1 (B virus) is demonstrated, the manufacture of oral poliomyelitis vaccine shall be discontinued and the competent authority shall be informed. Manufacturing shall not be resumed until a thorough investigation has been completed and precautions have been taken against any reappearance of the infection, and then only with the approval of the competent authority.

If these tests are not done immediately, the samples of pooled cell-culture fluid shall be kept at a temperature of – 60 °C or below, with the exception of the sample for the test for B virus, which may be held at 4 °C, provided that the test is done not more than 7 days after it has been taken.

Control cell cultures. On the day of inoculation with the virus working seed lot, 25 per cent (but not more than 2.5 L) of the cell suspension obtained from the kidneys of each single monkey or from not more than 10 near-term monkeys is taken to prepare uninoculated control cell cultures. These control cell cultures are incubated in the same conditions as the inoculated cultures for at least 2 weeks and are examined during this period for evidence of cytopathic changes. The tests are not valid if more than 20 per cent of the control cell cultures have been discarded for non-specific, accidental reasons. At the end of the observation period, the control cell cultures are examined for degeneration caused by an infectious agent. If this examination or any of the tests required in this section shows evidence of the presence in a control culture of any extraneous agent, the poliovirus grown in the corresponding inoculated cultures from the same group shall be rejected.

Tests for haemadsorbing viruses. At the time of harvest or within 4 days of inoculation of the production cultures with the virus working seed lot, a sample of 4 per cent of the control cell cultures is taken and tested for haemadsorbing viruses. At the end of the observation period, the remaining control cell cultures are similarly tested. The tests are carried out as described in chapter *2.6.16*.

Tests for other extraneous agents. At the time of harvest, or within 7 days of the day of inoculation of the production cultures with the working seed lot, a sample of at least 20 mL of the pooled fluid from each group of control cultures is taken and tested in 2 kinds of monkey kidney cell culture, as described above.

At the end of the observation period for the original control cell cultures, similar samples of the pooled fluid are taken and the tests referred to in this section in the 2 kinds of monkey kidney cell culture and in the rabbit cell cultures are repeated, as described above under Cell cultures.

If the presence of cercopithecid herpesvirus 1 (B virus) is demonstrated, the production cell cultures shall not be used and the measures concerning vaccine production described above must be undertaken.

The fluids collected from the control cell cultures at the time of virus harvest and at the end of the observation period may be pooled before testing for extraneous agents. A sample of 2 per cent of the pooled fluid is tested in each of the cell culture systems specified.

Single harvests

Tests for neutralised single harvests in primary monkey kidney cell cultures. A sample of at least 10 mL of each single harvest is neutralised by a type-specific poliomyelitis antiserum prepared in animals other than monkeys. In preparing antisera for this purpose, the immunising antigens used shall be prepared in non-simian cells.

Half of the neutralised suspension (corresponding to at least 5 mL of single harvest) is tested in monkey kidney cell cultures prepared from the same species, but not the same animal, as that used for vaccine production. The other half of the neutralised suspension is tested, if necessary, in monkey kidney cell cultures from another species so that the tests on the neutralised suspension are done in cell cultures from at least 1 species known to be sensitive to SV40.

The neutralised suspensions are inoculated into bottles of these cell cultures in such a way that the dilution of the suspension in the nutrient medium does not exceed 1 in 4. The area of the cell sheet is at least 3 cm^2/mL of neutralised suspension. At least 1 bottle of each type of cell culture remains uninoculated to serve as a control and is maintained by nutrient medium containing the same concentration of the specific antiserum used for neutralisation.

Animal serum may be used in the propagation of the cells, provided that it does not contain SV40 antibody, but the maintenance medium, after the inoculation of the test material, contains no added serum other than the poliovirus neutralising antiserum, except as described below.

The cultures are incubated at a temperature of 35-37 °C and observed for a total period of at least 4 weeks. During this observation period and after not less than 2 weeks' incubation, at least 1 subculture of fluid is made from each of these cultures in the same cell-culture system. The subcultures are also observed for at least 2 weeks.

Serum may be added to the original cultures at the time of subculturing, provided that the serum does not contain SV40 antibody.

Additional tests are made for extraneous agents on a further sample of the neutralised single harvests by inoculation of 10 mL into human cell cultures sensitive to measles virus. This test is also validated for the detection of sCMV.

Fluorescent-antibody techniques may be useful for detecting SV40 virus and other viruses in the cells.

The tests are not valid if more than 20 per cent of the culture vessels have been discarded for non-specific accidental reasons by the end of the respective test periods.

If any cytopathic changes occur in any of the cultures, the causes of these changes are investigated. If the cytopathic changes are shown to be due to unneutralised poliovirus, the test is repeated. If there is evidence of the presence of SV40 or other extraneous agents attributable to the single harvest, that single harvest is rejected.

MONOVALENT POOLED HARVEST

Monovalent pooled harvests are prepared by pooling a number of satisfactory single harvests of the same virus type. Monovalent pooled harvests from continuous cell lines may be purified. Each monovalent pooled harvest is filtered through a bacteria-retentive filter.

Only a monovalent pooled harvest that complies with the following requirements may be used in the preparation of the final bulk vaccine.

Identification. Each monovalent pooled harvest is identified as poliovirus of the given type, using specific antibodies.

Virus concentration. The virus concentration is determined by the method described below and serves as the basis for calculating the dilutions for preparation of the final bulk, for the quantity of virus used in the neurovirulence test and to establish and monitor production consistency.

Genetic markers. For Sabin poliovirus type 3, a validated MAPREC assay is performed. In this analysis the amount of the mutation at position 472 of the genome (472-C) is estimated and expressed as a ratio relative to the International Standard for MAPREC analysis of poliovirus type 3 (Sabin). A poliovirus type 3 monovalent pooled harvest found to have significantly more 472-C than the International Standard for MAPREC analysis of poliovirus type 3 (Sabin) fails in the MAPREC assay.

The MAPREC analysis of poliovirus type 3 (Sabin) is carried out using a standard operating procedure approved by the competent authority. A suitable procedure (*Mutant analysis by PCR and restriction enzyme cleavage (MAPREC) for oral poliovirus (Sabin) vaccine*) is available from WHO, Quality and Safety of Biologicals (QSB), Geneva. A laboratory must demonstrate to the competent authority that it is competent to perform the assay. The manufacturer and the competent authority shall agree on the procedure and the criteria for deciding whether a monovalent pooled harvest contains significantly more 472-C than the International Standard.

Acceptance/rejection criteria for assessment of consistency of production are determined for each manufacturer and for each working seed lot by agreement with the competent authority. These criteria are updated as each new bulk is prepared and analysed. An investigation of consistency occurs if a monovalent pooled harvest gives results that are inconsistent with previous production history.

As the MAPREC assay for type 3 poliovirus (Sabin) is highly predictive of *in vivo* neurovirulence, if a filtered monovalent pooled harvest of type 3 poliovirus (Sabin) fails the MAPREC assay then this triggers an investigation of the consistency of the manufacturing process. This investigation also includes a consideration of the suitability of the working seed lot.

Monovalent pooled harvests passing the MAPREC assay are subsequently tested for *in vivo* neurovirulence.

For poliovirus type 3, results from the MAPREC assay and the monkey neurovirulence test (*2.6.19*) are used concomitantly to assess the impact of changes in the production process or when a new manufacturer starts production.

Pending validation of MAPREC assays for poliovirus types 1 and 2, for these viruses filtered bulk suspension is tested for the property of reproducing at temperatures of 36 °C and 40 °C. A ratio of the replication capacities of the virus in the monovalent pooled harvest is obtained over a temperature range between 36 °C and 40 °C in comparison with the seed lot or a reference preparation for the marker tests and with appropriate rct/40− and rct/40+ strains of poliovirus of the same type. The incubation temperatures used in this test are controlled to within ± 0.1 °C. The monovalent pooled harvest passes the test if, for both the virus in the harvest and the appropriate reference material, the titre determined at 36 °C is at least 5.0 $\log_{10}$ greater than that determined at 40 °C. If growth at 40 °C is so low that a valid comparison cannot be established, a temperature in the region of 39.0-39.5 °C is used, at which temperature the reduction in titre of the reference material must be in the range 3.0-5.0 $\log_{10}$ of its value at 36 °C; the acceptable minimum reduction is determined for each virus strain at a given temperature. If the titres obtained for 1 or more of the reference viruses are not concordant with the expected values, the test must be repeated.

Neurovirulence (*2.6.19*). Each monovalent pooled harvest complies with the test for neurovirulence of poliomyelitis vaccine (oral). If the monkey neurovirulence test is carried

Vaccines

out only by the manufacturer, the test slides are provided to the competent authority for assessment. The TgPVR21 transgenic mouse model provides a suitable alternative to the monkey neurovirulence test for neurovirulence testing of types 1, 2 or 3 vaccines once a laboratory qualifies as being competent to perform the test and the experience gained is to the satisfaction of the competent authority. The test is carried out using a standard operating procedure approved by the competent authority. A suitable procedure (*Neurovirulence test of type 1, 2 or 3 live poliomyelitis vaccines (oral) in transgenic mice susceptible to poliovirus*) is available from WHO, Quality and Safety of Biologicals, Geneva.

Primary monkey kidney cell cultures. *The following special requirements apply to monovalent pooled harvests derived from primary monkey kidney cell cultures.*

Retroviruses. The monovalent pooled harvest is examined using a reverse transcriptase assay. No indication of the presence of retroviruses is found.

Test in rabbits. A sample of the monovalent pooled harvest is tested for cercopithecid herpesvirus 1 (B virus) and other viruses by injection of not less than 100 mL into not fewer than 10 healthy rabbits each weighing 1.5-2.5 kg. Each rabbit receives not less than 10 mL and not more than 20 mL, of which 1 mL is given intradermally at multiple sites since the maximum volume to be given intradermally at each site is 0.1 mL, and the remainder subcutaneously. The rabbits are observed for at least 3 weeks for death or signs of illness.

All rabbits that die after the first 24 h of the test and those showing signs of illness are examined by autopsy, and the brain and organs removed for detailed examination to establish the cause of death.

The test is not valid if more than 20 per cent of the inoculated rabbits show signs of intercurrent infection during the observation period. The monovalent pooled harvest passes the test if none of the rabbits shows evidence of infection with B virus or with other extraneous agents or lesions of any kind attributable to the bulk suspension.

If the presence of B virus is demonstrated, the measures concerning vaccine production described above under Cell cultures are taken.

Test in guinea-pigs. If the primary monkey kidney cell cultures are not derived from monkeys kept in a closed colony, the monovalent pooled harvest shall be shown to comply with the following test. Administer to each of not fewer than 5 guinea-pigs, each weighing 350-450 g, 0.1 mL of the monovalent pooled harvest by intracerebral injection (0.05 mL in each cerebral hemisphere) and 0.5 mL by intraperitoneal injection. Measure the rectal temperature of each animal on each working day for 6 weeks. At the end of the observation period carry out autopsy on each animal.

In addition, administer to not fewer than 5 guinea-pigs 0.5 mL by intraperitoneal injection and observe as described above for 2-3 weeks. At the end of the observation period, carry out a passage from these animals to not fewer than 5 guinea-pigs using blood and a suspension of liver or spleen tissue. Measure the rectal temperature of the latter guinea-pigs for 2-3 weeks. Examine by autopsy all animals that, after the first day of the test, die or are euthanised because they show disease, or show on 3 consecutive days a body temperature higher than 40.1 °C; carry out histological examination to detect infection with filoviruses; in addition, inject a suspension of liver or spleen tissue or of blood intraperitoneally into not fewer than 3 guinea-pigs. If any signs of infection with filoviruses are noted, confirmatory serological tests are carried out on the blood of the affected animals. The monovalent pooled harvest complies with the test if not fewer than 80 per cent of the guinea-pigs survive to the end of the observation period and remain in good health, and no animal shows signs of infection with filoviruses.

FINAL BULK VACCINE

The final bulk vaccine is prepared from one or more satisfactory monovalent pooled harvests and may contain more than one virus type. Suitable flavouring substances and stabilisers may be added.

Only a final bulk vaccine that complies with the following requirement may be used in the preparation of the final lot.

Bacterial and fungal contamination. Carry out the test for sterility (*2.6.1*), using 10 mL for each medium.

FINAL LOT

Only a final lot that complies with the following requirement for thermal stability and is satisfactory with respect to each of the requirements given below under Identification, Tests and Assay may be released for use.

Thermal stability. Maintain not fewer than 3 containers of the final lot at 37 ± 1 °C for 48 h. Determine the total virus concentration as described under Assay in parallel for the heated vaccine and for vaccine maintained at the temperature recommended for storage. The total virus concentration of the heated vaccine is not more than 0.5 $\log_{10}$ lower than that of the unheated vaccine.

IDENTIFICATION

The vaccine is shown to contain poliovirus of each type stated on the label, using specific antibodies.

TESTS

Bacterial and fungal contamination. The vaccine complies with the test for sterility (*2.6.1*).

ASSAY

Titrate the vaccine for infectious virus, using not fewer than 3 separate containers of vaccine, following the method described below. Titrate 1 container of an appropriate virus reference preparation in triplicate to validate each assay. The virus concentration of the reference preparation is monitored using a control chart and a titre is established on a historical basis by each laboratory. If the vaccine contains more than one poliovirus type, titrate each type separately, using an appropriate type-specific antiserum (or preferably a monoclonal antibody) to neutralise each of the other types present.

Calculate the individual virus concentration for each container of vaccine and for each replicate of the reference preparation as well as the corresponding combined virus concentrations, using the usual statistical methods (for example, *5.3*).

For a trivalent vaccine, the combined estimated virus titres per single human dose must be:

- not less than 6.0 $\log_{10}$ infectious virus units ($CCID_{50}$) for type 1;
- not less than 5.0 $\log_{10}$ infectious virus units ($CCID_{50}$) for type 2; and
- not less than 5.5 $\log_{10}$ infectious virus units ($CCID_{50}$) for type 3.

For a monovalent or divalent vaccine, the minimum virus titres are decided by the competent authority.

Method. Inoculate a suitable number of wells in a microtitre plate with a suitable volume of each of the selected dilutions of virus followed by a suitable volume of a cell suspension of the Hep-2 (Cincinnati) line. Examine the cultures between days 7 and 9.

The assay is not valid if:

- the confidence interval (P = 0.95) of the estimated virus concentration of the reference preparation for the 3 replicates combined is greater than ± 0.3 $\log_{10}$ $CCID_{50}$;
- the virus concentration of the reference preparation differs by more than 0.5 $\log_{10}$ $CCID_{50}$ from the established value. The relation with the appropriate European Pharmacopoeia

Vaccines

Biological Reference Preparation is established and monitored at regular intervals when a manufacturer's reference preparation is used.

The assay is repeated if the confidence interval (P = 0.95) of the combined virus concentration of the vaccine is greater than ± 0.3 $\log_{10}$ $CCID_{50}$; data obtained from valid assays only are combined by the usual statistical methods (for example, *5.3*) to calculate the virus concentration of the sample. The confidence interval (P = 0.95) of the combined virus concentration is not greater than ± 0.3 $\log_{10}$ $CCID_{50}$.

Poliomyelitis vaccine (oral) BRP is suitable for use as a reference preparation.

Where justified and authorised, different assay designs may be used; this may imply the application of different validity and acceptance criteria. However, the vaccine must comply if tested as described above.

LABELLING

The label states:

- the types of poliovirus contained in the vaccine;
- the minimum amount of virus of each type contained in a single human dose;
- the cell substrate used for the preparation of the vaccine.

04/2008:0216

RABIES VACCINE FOR HUMAN USE PREPARED IN CELL CULTURES

Vaccinum rabiei ex cellulis ad usum humanum

DEFINITION

Rabies vaccine for human use prepared in cell cultures is a freeze-dried preparation of a suitable strain of fixed rabies virus grown in cell cultures and inactivated by a validated method.

The vaccine is reconstituted immediately before use as stated on the label to give a clear liquid that may be coloured owing to the presence of a pH indicator.

PRODUCTION

GENERAL PROVISIONS

The production of the vaccine is based on a virus seed-lot system and, if a cell line is used for virus propagation, a cell-bank system. The production method shall have been shown to yield consistently vaccines that comply with the requirements for immunogenicity, safety and stability. Unless otherwise justified and authorised, the virus in the final vaccine must not have undergone more passages from the master seed lot than were used to prepare the vaccine shown in clinical studies to be satisfactory with respect to safety and efficacy; even with authorised exceptions, the number of passages beyond the level used for clinical studies must not exceed 5.

The production method is validated to demonstrate that the product, if tested, would comply with the test for abnormal toxicity for immunosera and vaccines for human use (*2.6.9*).

SUBSTRATE FOR VIRUS PROPAGATION

The virus is propagated in a human diploid cell line (*5.2.3*), in a continuous cell line approved by the competent authority, or in cultures of chick-embryo cells derived from a flock free from specified pathogens (*5.2.2*).

SEED LOTS

The strain of rabies virus used shall be identified by historical records that include information on the origin of the strain and its subsequent manipulation.

Working seed lots are prepared by not more than 5 passages from the master seed lot.

Only a working seed lot that complies with the following tests may be used for virus propagation.

Identification. Each working seed lot is identified as rabies virus using specific antibodies.

Virus concentration. The virus concentration of each working seed lot is determined by a cell culture method using immunofluorescence, to ensure consistency of production.

Extraneous agents (*2.6.16*). The working seed lot complies with the requirements for virus seed lots. If the virus has been passaged in mouse brain, specific tests for murine viruses are carried out.

VIRUS PROPAGATION AND HARVEST

All processing of the cell bank and subsequent cell cultures is done under aseptic conditions in an area where no other cells are handled. Approved animal (but not human) serum may be used in the media, but the final medium for maintaining cell growth during virus multiplication does not contain animal serum; the media may contain human albumin. Serum and trypsin used in the preparation of cell suspensions and media are shown to be free from extraneous agents. The cell culture media may contain a pH indicator such as phenol red and approved antibiotics at the lowest effective concentration. Not less than 500 mL of the cell cultures employed for vaccine production are set aside as uninfected cell cultures (control cells). The virus suspension is harvested on one or more occasions during incubation. Multiple harvests from the same production cell culture may be pooled and considered as a single harvest.

Only a single harvest that complies with the following requirements may be used in the preparation of the inactivated viral harvest.

Identification. The single harvest contains virus that is identified as rabies virus using specific antibodies.

Virus concentration. Titrate for infective virus in cell cultures; the titre is used to monitor consistency of production.

Control cells. The control cells of the production cell culture from which the single harvest is derived comply with a test for identification and with the requirements for extraneous agents (*2.6.16*).

PURIFICATION AND INACTIVATION

The virus harvest may be concentrated and/or purified by suitable methods; the virus harvest is inactivated by a validated method at a fixed, well-defined stage of the process, which may be before, during or after any concentration or purification. The method shall have been shown to be capable of inactivating rabies virus without destruction of the immunogenic activity. If betapropiolactone is used, the concentration shall at no time exceed 1:3500.

Only an inactivated viral suspension that complies with the following requirements may be used in the preparation of the final bulk vaccine.

Residual infectious virus. Carry out an amplification test for residual infectious rabies virus immediately after inactivation or using a sample frozen immediately after inactivation and stored at − 70 °C. Inoculate a quantity of inactivated viral suspension equivalent to not less than 25 human doses of vaccine into cell cultures of the same type as those used for production of the vaccine. A passage may be made after 7 days. Maintain the cultures for a total of 21 days and then examine the cell cultures for rabies virus using an immunofluorescence test. The inactivated virus harvest complies with the test if no rabies virus is detected.

Residual host-cell DNA. If a continuous cell line is used for virus propagation, the content of residual host-cell DNA, determined using a suitable method as described in *Products of recombinant DNA technology (0784)*, is not greater than 10 ng per single human dose.

FINAL BULK VACCINE

The final bulk vaccine is prepared from one or more inactivated viral suspensions. An approved stabiliser may be added to maintain the activity of the product during and after freeze-drying.

Only a final bulk vaccine that complies with the following requirements may be used in the preparation of the final lot.

Glycoprotein content. Determine the glycoprotein content by a suitable immunochemical method (*2.7.1*), for example, single-radial immunodiffusion, enzyme-linked immunosorbent assay or an antibody-binding test. The content is within the limits approved for the particular product.

Sterility (*2.6.1*). The final bulk vaccine complies with the test for sterility, carried out using 10 mL for each medium.

FINAL LOT

The final bulk vaccine is distributed aseptically into sterile containers and freeze-dried to a moisture content shown to be favourable to the stability of the vaccine. The containers are then closed so as to avoid contamination and the introduction of moisture.

Only a final lot that complies with each of the requirements given below under Identification, Tests and Assay may be released for use. Provided that the test for residual infectious virus has been carried out with satisfactory results on the inactivated viral suspension and the test for bovine serum albumin has been carried out with satisfactory results on the final bulk vaccine, these tests may be omitted on the final lot.

IDENTIFICATION

The vaccine is shown to contain rabies virus antigen by a suitable immunochemical method (*2.7.1*) using specific antibodies, preferably monoclonal; alternatively, the assay serves also to identify the vaccine.

TESTS

Residual infectious virus. Inoculate a quantity equivalent to not less than 25 human doses of vaccine into cell cultures of the same type as those used for production of the vaccine. A passage may be made after 7 days. Maintain the cultures for a total of 21 days and then examine the cell cultures for rabies virus using an immunofluorescence test. The vaccine complies with the test if no rabies virus is detected.

Bovine serum albumin: maximum 50 ng per single human dose, determined by a suitable immunochemical method (*2.7.1*).

Sterility (*2.6.1*). It complies with the test.

Bacterial endotoxins (*2.6.14*): less than 25 IU per single human dose.

Pyrogens (*2.6.8*). It complies with the test. Unless otherwise justified and authorised, inject into each rabbit a single human dose of the vaccine diluted to 10 times its volume.

Water (*2.5.12*): maximum 3.0 per cent.

ASSAY

The potency of rabies vaccine is determined by comparing the dose necessary to protect mice against the effects of a lethal dose of rabies virus, administered intracerebrally, with the quantity of a reference preparation of rabies vaccine necessary to provide the same protection. For this comparison a reference preparation of rabies vaccine, calibrated in International Units, and a suitable preparation of rabies virus for use as the challenge preparation are necessary.

The International Unit is the activity contained in a stated quantity of the International Standard. The equivalence in International Units of the International Standard is stated by the World Health Organization.

The test described below uses a parallel-line model with at least 3 points for the vaccine to be examined and the reference preparation. Once the analyst has experience with the method for a given vaccine, it is possible to carry out a simplified test using a single dilution of the vaccine to be examined. Such a test enables the analyst to determine that the vaccine has a potency significantly higher than the required minimum, but does not give full information on the validity of each individual potency determination. The use of a single dilution allows a considerable reduction in the number of animals required for the test and must be considered by each laboratory in accordance with the provisions of the European Convention for the Protection of Vertebrate Animals Used for Experimental and Other Scientific Purposes.

Selection and distribution of the test animals. Use healthy female mice, about 4 weeks old, each weighing 11-15 g, and from the same stock. Distribute the mice into 6 groups of a size suitable to meet the requirements for validity of the test and, for titration of the challenge suspension, 4 groups of 5.

Preparation of the challenge suspension. Inoculate mice intracerebrally with the Challenge Virus Standard (CVS) strain of rabies virus and when the mice show signs of rabies, but before they die, euthanise them, then remove the brains and prepare a homogenate of the brain tissue in a suitable diluent. Separate gross particulate matter by centrifugation and use the supernatant as the challenge suspension. Distribute the suspension in small volumes in ampoules, seal and store at a temperature below – 60 °C. Thaw one ampoule of the suspension and make serial dilutions in a suitable diluent. Allocate each dilution to a group of 5 mice and inject intracerebrally into each mouse 0.03 mL of the dilution allocated to its group. Observe the mice for 14 days. Calculate the LD_{50} of the undiluted suspension using the number in each group that, between the 5th and 14th days, die or develop signs of rabies.

Determination of potency of the vaccine. Prepare 3 fivefold serial dilutions of the vaccine to be examined and 3 fivefold serial dilutions of the reference preparation. Prepare the dilutions such that the most concentrated suspensions may be expected to protect more than 50 per cent of the animals to which they are administered and the least concentrated suspensions may be expected to protect less than 50 per cent of the animals to which they are administered. Allocate the 6 dilutions, 1 to each of the 6 groups of mice, and inject by the intraperitoneal route into each mouse 0.5 mL of the dilution allocated to its group. After 7 days, prepare 3 identical dilutions of the vaccine to be examined and of the reference preparation and repeat the injections. 7 days after the second injection, prepare a suspension of the challenge virus such that, on the basis of the preliminary titration, 0.03 mL contains about 50 LD_{50}. Inject intracerebrally into each vaccinated mouse 0.03 mL of this suspension. Prepare 3 suitable serial dilutions of the challenge suspension. Allocate the challenge suspension and the 3 dilutions, 1 to each of the 4 groups of 5 control mice, and inject intracerebrally into each mouse 0.03 mL of the suspension or dilution allocated to its group. Observe the animals in each group for 14 days and record the number in each group that die or show signs of rabies in the period 5-14 days after challenge.

The test is not valid unless:

- for both the vaccine to be examined and the reference preparation the 50 per cent protective dose lies between the largest and smallest doses given to the mice;
- the titration of the challenge suspension shows that 0.03 mL of the suspension contained not less than 10 LD_{50};
- the statistical analysis shows a significant slope and no significant deviations from linearity or parallelism of the dose-response curves;
- the confidence limits (P = 0.95) are not less than 25 per cent and not more than 400 per cent of the estimated potency.

Vaccines

The vaccine complies with the test if the estimated potency is not less than 2.5 IU per human dose.

Application of alternative end-points. Once a laboratory has established the above assay for routine use, the lethal end-point is replaced by an observation of clinical signs and application of an end-point earlier than death to reduce animal suffering. The following is given as an example.

The progress of rabies infection in mice following intracerebral injection can be represented by 5 stages defined by typical clinical signs:

Stage 1: ruffled fur, hunched back;

Stage 2: slow movements, loss of alertness (circular movements may also occur);

Stage 3: shaky movements, trembling, convulsions;

Stage 4: signs of paresis or paralysis;

Stage 5: moribund state.

Mice are observed at least twice daily from day 4 after challenge. Clinical signs are recorded using a chart such as that shown in Table 0216.-1. Experience has shown that using stage 3 as an end-point yields assay results equivalent to those found when a lethal end-point is used. This must be verified by each laboratory by scoring a suitable number of assays using both the clinical signs and the lethal end-point.

Table 0216.-1. – *Example of a chart used to record clinical signs in the rabies vaccine potency test*

	Days after challenge							
Clinical signs	**4**	**5**	**6**	**7**	**8**	**9**	**10**	**11**
Ruffled fur Hunched back								
Slow movements Loss of alertness Circular movements								
Shaky movements Trembling Convulsions								
Paresis Paralysis								
Moribund state								

LABELLING

The label states the biological origin of the cells used for the preparation of the vaccine.

01/2012:2417

ROTAVIRUS VACCINE (LIVE, ORAL)

Vaccinum rotaviri vivum perorale

DEFINITION

Rotavirus vaccine (live, oral) is a preparation of one or more suitable virus serotypes, grown in an approved cell substrate and presented in a form suitable for oral administration.

The vaccine is a clear liquid or it may be a freeze-dried preparation to be reconstituted immediately before use, as stated on the label, to give a slightly turbid liquid. The vaccine ready for administration may be coloured owing to the presence of a pH indicator.

PRODUCTION

GENERAL PROVISIONS

The vaccine strains and the production method shall have been shown to yield consistently vaccines comparable with the vaccine of proven clinical efficacy and safety in man. The vaccine is formulated so as to avoid inactivation by gastric fluids. Where the vaccine is freeze-dried, the antacid capacity of the solvent and its stability are established.

The production of vaccine is based on a virus seed-lot system and a cell-bank system. Unless otherwise justified and authorised, the virus in the final vaccine shall have undergone no more passages from the master seed lot than were used to prepare the vaccine shown in clinical studies to be satisfactory with respect to safety and efficacy.

If purification steps are present, the reduction of selected process-related impurities and residuals such as residual host-cell proteins, residual cellular DNA, endotoxins, bovine serum, trypsin, and antibiotics is monitored to establish consistency of the purification process.

REFERENCE PREPARATION

A suitable reference preparation that is representative of batches of vaccine shown to be effective in clinical trials is established for use in tests to determine virus concentration. The differences in the composition and characteristics of rotavirus vaccines mean that there will be a specific reference preparation for each one.

SUBSTRATE FOR VIRUS PROPAGATION

The virus is propagated in a suitable cell line (*5.2.3*).

VIRUS SEED LOTS

The strain(s) of rotavirus used shall be identified by historical records that include information on the origin of each strain and its subsequent manipulation including the method of attenuation, whether the strains have been biologically cloned prior to generation of the master seed lot, genetic sequence information, the phenotypic and genotypic stability of the master and working seed lots when passaged up to the single harvest level, and the passage level at which attenuation for humans was demonstrated by clinical trials. Virus seed lots are stored at temperatures below − 20 °C if freeze-dried, or below − 60 °C if not freeze-dried.

Only a seed lot that complies with the following requirements may be used for virus propagation.

Identification. The master and working seed lots are shown to be of the required rotavirus type by an immunological assay using specific antibodies or by a molecular identity test such as polyacrylamide gel electrophoresis of RNA, RNA/RNA hybridisation, or restriction-enzyme mapping of genetic sequences of polymerase chain reaction (PCR)-amplified VP7 gene segments.

Virus concentration. The virus concentration of the master and working seed lots is determined to monitor consistency of production. Direct cell-culture based methods and nucleic acid amplification techniques (NAT) (*2.6.21*) such as PCR quantification of virus replication in cell culture may be used.

Extraneous agents (*2.6.16*). Each working seed lot complies with the requirements for virus seed lots.

VIRUS PROPAGATION, SINGLE HARVEST, MONOVALENT POOLED HARVEST

All processing of the cell bank and subsequent cell cultures is done under aseptic conditions in an area where no other cells are being handled. Suitable animal (but not human) serum may be used in the culture media, but the final medium for maintaining cell growth during virus multiplication does not contain animal serum. Serum and trypsin used in the preparation of cell suspensions and culture media are shown to be free from extraneous agents. The cell culture medium may contain a pH indicator such as phenol red and suitable antibiotics at the lowest effective concentration. It is preferable to have a substrate free from antibiotics during production.

STORED VIRUS INTERMEDIATE CULTURE

Where a stored virus intermediate culture, prepared from the working seed lot, is used for inoculation, on the day of inoculation not less than 5 per cent or 500 mL of the cell cultures employed, whichever is greater, are set aside as uninfected cell cultures (control cells). Stored virus intermediate cultures are harvested at a time appropriate to the strain of virus and stored at temperatures below – 60°C.

Only a stored virus intermediate culture that complies with the following requirements may be used for virus propagation.

Identification. Each stored virus intermediate culture is identified by rotavirus type by an immunological assay using specific antibodies or by a molecular identity test such as NAT (*2.6.21*).

Bacterial and fungal contamination. Each stored virus intermediate culture complies with the test for sterility (*2.6.1*), carried out using 10 mL for each medium.

Virus concentration. The virus concentration of each stored virus intermediate culture is determined as prescribed under Assay to monitor consistency of production. Both direct cell-culture based methods and NAT (*2.6.21*) such as PCR quantification of virus replication in cell culture may be used.

Extraneous agents (*2.6.16*). Each stored virus intermediate culture complies with the tests for extraneous agents.

Control cells. The control cells of the production cell culture from which each stored virus intermediate culture is derived comply with a test for identity and with the requirements for extraneous agents (*2.6.16*).

VIRUS PROPAGATION AND SINGLE HARVEST

On the day of inoculation with the virus working seed lot or stored virus intermediate culture, cell cultures employed for vaccine production are set aside as uninfected cell cultures (control cells). If bioreactor technology is used, the size and handling of the cell sample to be examined is approved by the competent authority. The virus suspensions are harvested at a time appropriate to the strain of virus being used.

Only a single virus harvest that complies with the following requirements may be used for further processing.

Bacterial and fungal contamination. Each single virus harvest complies with the test for sterility (*2.6.1*), carried out using 10 mL for each medium.

Control cells. The control cells of the production cell culture from which each single harvest is derived comply with a test for identity and with the requirements for extraneous agents (*2.6.16*).

MONOVALENT POOLED HARVEST

Monovalent pooled harvests are prepared by pooling a number of single harvests of the same virus type. If no monovalent pooled harvest is prepared, the tests below are carried out on each single harvest.

Only a single harvest or a monovalent pooled harvest that complies with the following requirements may be used in the preparation of the purified monovalent harvest.

Identification. Each single harvest or monovalent pooled harvest is identified by rotavirus type by an immunological assay using specific antibodies or by a molecular identity test such as NAT (*2.6.21*).

Bacterial and fungal contamination. Each single harvest or monovalent pooled harvest complies with the test for sterility (*2.6.1*), carried out using 10 mL for each medium.

Virus concentration. The virus concentration of each single harvest or monovalent pooled harvest is determined as prescribed under Assay to monitor consistency of production. Both direct cell-culture based methods and NAT (*2.6.21*) such as PCR quantification of virus replication in cell culture may be used.

Extraneous agents (*2.6.16*). Each single harvest or monovalent pooled harvest complies with the tests for extraneous agents.

PURIFIED MONOVALENT HARVEST

The purified monovalent harvest is prepared from a single harvest or a pooled monovalent harvest. The single harvest or pooled monovalent harvest is clarified to remove cell debris and may be further purified.

Only a purified monovalent harvest that complies with the following requirements may be used in the preparation of the final bulk vaccine.

Bacterial and fungal contamination. The purified monovalent harvest complies with the test for sterility (*2.6.1*), carried out using 10 mL for each medium.

Virus concentration. The virus concentration of the purified monovalent harvest is determined as prescribed under Assay to monitor consistency of production. Both direct cell-culture based methods and NAT (*2.6.21*) such as PCR quantification of virus replication in cell culture may be used.

Residual cellular DNA: maximum 100 µg of cellular DNA per human dose for viruses grown in continuous cells lines.

FINAL BULK VACCINE

The final bulk vaccine is prepared from one or more satisfactory purified monovalent harvests and may contain more than one virus type. Suitable stabilisers may be added.

Only a final bulk vaccine that complies with the following requirement may be used in the preparation of the final lot.

Bacterial and fungal contamination. The final bulk vaccine complies with the test for sterility (*2.6.1*), carried out using 10 mL for each medium.

FINAL LOT

The final bulk vaccine is distributed aseptically into sterile containers and may be freeze-dried to a moisture content shown to be favourable to the stability of the vaccine. The containers are then closed so as to avoid contamination and the introduction of moisture.

An approved minimum virus concentration for release of the product is established for each virus type to ensure, in light of stability data, that the minimum concentration stated on the label will be present at the end of the period of validity.

For freeze-dried vaccines, tests for identity, pH, volume, sterility and content of key components are carried out on the solvent.

Only a final lot that complies with the following requirement for thermal stability and is satisfactory with respect to each of the requirements given below under Identification, Tests and Assay may be released for use.

Thermal stability. Maintain not fewer than 3 containers of the final lot at an elevated temperature for a defined time period, using conditions found suitable for the particular product as approved by the competent authority. Determine the virus concentration as described under Assay in parallel for the heated vaccine and for vaccine maintained at the temperature recommended for storage. The virus concentration of the containers that have been heated does not decrease by more than an approved amount during the period of exposure. For a multivalent vaccine, if there is no significant difference in the virus loss between serotypes, the loss may be determined from total virus concentration.

IDENTIFICATION

The vaccine is shown to contain rotavirus of each type stated on the label by an immunological assay using specific antibodies or by a molecular identity test. If PCR is used for the assay, this may serve as the identity test.

TESTS

Bacterial and fungal contamination. The vaccine complies with the test for sterility (*2.6.1*).

Water (*2.5.12*): maximum 3.0 per cent for each final lot of freeze-dried vaccine.

ASSAY

The assay of rotavirus vaccine is carried out by inoculation of suitable cell cultures with dilutions of the vaccine and evaluation of the rotavirus concentration, either by visualisation of infected areas of a cell monolayer or by comparison of the capacity of the vaccine to produce viral RNA following infection of cells with the corresponding capacity of an approved reference preparation.

For the assay based on visualisation of infected areas of a cell monolayer, titrate the vaccine for infective virus using at least 3 separate containers. Titrate the contents of 1 container of an appropriate virus reference preparation in triplicate to validate each assay. If the vaccine contains more than 1 rotavirus type, titrate each type separately using a method of suitable specificity. The virus concentration of the reference preparation is monitored using a control chart and a titre is established on a historical basis by each laboratory.

Calculate the individual virus concentration for each container of vaccine and for each replicate of the reference preparation as well as the corresponding combined virus concentrations, using the usual statistical methods (for example, *5.3*).

The assay is not valid if:

- the confidence interval (P = 0.95) of the estimated virus concentration of the reference preparation for the 3 replicates combined is greater than ± 0.3 $\log_{10}$ $CCID_{50}$ (or an equivalent value expressed with a unit suitable for the method used for the assay);
- the virus concentration of the reference preparation differs by more than 0.5 $\log_{10}$ $CCID_{50}$ (or an equivalent value expressed with a unit suitable for the method used for the assay) from the established value.

The assay is repeated if the confidence interval (P = 0.95) of the combined virus concentration of the vaccine is greater than ± 0.3 $\log_{10}$ $CCID_{50}$ (or an equivalent value expressed with a unit suitable for the method used for the assay); data generated from valid assays only are combined by the usual statistical methods (for example, *5.3*) to calculate the virus concentration of the sample. The confidence interval (P = 0.95) of the combined virus concentration is not greater than ± 0.3 $\log_{10}$ $CCID_{50}$ (or an equivalent value expressed with a unit suitable for the method used for the assay).

Where justified and authorised, different assay designs may be used; this may imply the application of different validity and acceptance criteria. However, the vaccine must comply if tested as described above.

For the assay based on comparison of the capacity of the vaccine to produce viral RNA following infection of cells with the corresponding capacity of an approved reference preparation, a suitable number of cell cultures in a microtitre plate are infected in parallel with serial dilutions of the vaccine and the reference preparation. After incubation to allow virus replication, viral RNA in the individual wells is released from the cells and quantified by NAT (*2.6.21*), such as real-time quantitative reverse-transcriptase polymerase chain reaction (RT-PCR) technology.

Not fewer than 3 separate containers of the vaccine are assayed against a container of the reference preparation titrated in triplicate.

Calculate the individual virus concentration for each container of vaccine against the reference preparation as well as the corresponding combined virus concentrations, using the usual statistical methods (for example, *5.3*).

The combined estimate of the virus concentration for the 3 containers of vaccine is not less than that stated on the label.

The assay is not valid unless:

- the negative external NAT control is unambiguously negative;
- the positive external NAT control is unambiguously positive;
- the negative matrix control (uninfected cells) is unambiguously negative;
- the positive matrix control (cells spiked with viral RNA) is unambiguously positive;
- the statistical analysis shows a significant slope and no significant deviations from linearity or parallelism of the dose-response curves.

The assay is repeated if the confidence interval (P = 0.95) of the combined virus concentration of the vaccine is greater than ± 0.3 $\log_{10}$ infectious units; data generated from valid assays only are combined by the usual statistical methods (for example, *5.3*) to calculate the virus concentration of the sample. The confidence interval (P = 0.95) of the combined virus concentration is not greater than ± 0.3 $\log_{10}$ infectious units.

LABELLING

The label states:

- the type or types of rotavirus contained in the vaccine;
- the minimum amount of each type of virus contained in 1 single human dose;
- the cell substrate used for the preparation of the vaccine.

04/2010:0162

RUBELLA VACCINE (LIVE)

Vaccinum rubellae vivum

DEFINITION

Rubella vaccine (live) is a freeze-dried preparation of a suitable attenuated strain of rubella virus. The vaccine is reconstituted immediately before use, as stated on the label, to give a clear liquid that may be coloured owing to the presence of a pH indicator.

PRODUCTION

The production of vaccine is based on a virus seed-lot system and a cell-bank system. The production method shall have been shown to yield consistently live rubella vaccines of adequate immunogenicity and safety in man. Unless otherwise justified and authorised, the virus in the final vaccine shall have undergone no more passages from the master seed lot than were used to prepare the vaccine shown in clinical studies to be satisfactory with respect to safety and efficacy.

The potential neurovirulence of the vaccine strain is considered during preclinical development, based on available epidemiological data on neurovirulence and neurotropism, primarily for the wild-type virus. In light of this, a risk analysis is carried out. Where necessary and if available, a test is carried out on the vaccine strain using an animal model that differentiates wild-type and attenuated virus; tests on strains of intermediate attenuation may also be needed.

The production method is validated to demonstrate that the product, if tested, would comply with the test for abnormal toxicity for immunosera and vaccines for human use (*2.6.9*).

SUBSTRATE FOR VIRUS PROPAGATION

The virus is propagated in human diploid cells (*5.2.3*).

SEED LOT

The strain of rubella virus used shall be identified by historical records that include information on the origin of the strain and its subsequent manipulation. Virus seed lots are prepared in large quantities and stored at temperatures below – 20 °C if freeze-dried, or below – 60 °C if not freeze-dried.

Only a seed lot that complies with the following requirements may be used for virus propagation.

Identification. The master and working seed lots are identified as rubella virus by serum neutralisation in cell culture, using specific antibodies.

Virus concentration. The virus concentration of the master and working seed lots is determined to ensure consistency of production.

Extraneous agents (*2.6.16*). The working seed lot complies with the requirements for seed lots.

PROPAGATION AND HARVEST

All processing of the cell bank and subsequent cell cultures is done under aseptic conditions in an area where no other cells are handled during the production. Suitable animal (but not human) serum may be used in the growth medium, but the final medium for maintaining cell growth during virus multiplication does not contain animal serum. Serum and trypsin used in the preparation of cell suspensions and culture media are shown to be free from extraneous agents. The cell culture medium may contain a pH indicator such as phenol red and suitable antibiotics at the lowest effective concentration. It is preferable to have a substrate free from antibiotics during production. Not less than 500 mL of the production cell cultures is set aside as uninfected cell cultures (control cells). The temperature of incubation is controlled during the growth of the virus. The virus suspension is harvested, on one or more occasions, within 28 days of inoculation. Multiple harvests from the same production cell culture may be pooled and considered as a single harvest.

Only a single harvest that complies with the following requirements may be used in the preparation of the final bulk vaccine.

Identification. The single harvest contains virus that is identified as rubella virus by serum neutralisation in cell culture, using specific antibodies.

Virus concentration. The virus concentration in the single harvest is determined as prescribed under Assay to monitor consistency of production and to determine the dilution to be used for the final bulk vaccine.

Extraneous agents (*2.6.16*). The single harvest complies with the tests for extraneous agents.

Control cells. The control cells comply with a test for identification and with the tests for extraneous agents (*2.6.16*).

FINAL BULK VACCINE

Single harvests that comply with the above tests are pooled and clarified to remove cells. A suitable stabiliser may be added and the pooled harvests diluted as appropriate.

Only a final bulk vaccine that complies with the following requirement may be used in the preparation of the final lot.

Bacterial and fungal contamination. The final bulk vaccine complies with the test for sterility (*2.6.1*), carried out using 10 mL for each medium.

FINAL LOT

A minimum virus concentration for release of the product is established such as to ensure, in light of stability data, that the minimum concentration stated on the label will be present at the end of the period of validity.

Only a final lot that complies with the requirements for minimum virus concentration for release, with the following requirement for thermal stability and with each of the requirements given below under Identification and Tests may be released for use. Provided that the test for bovine serum albumin has been carried out with satisfactory results on the final bulk vaccine, it may be omitted on the final lot.

Thermal stability. Maintain at least 3 vials of the final lot of freeze-dried vaccine in the dry state at 37 ± 1 °C for 7 days. Determine the virus concentration as described under Assay in parallel for the heated vaccine and for vaccine stored at the temperature recommended for storage. The virus concentration of the heated vaccine is not more than 1.0 $\log_{10}$ lower than that of the unheated vaccine.

IDENTIFICATION

When the vaccine reconstituted as stated on the label is mixed with specific rubella antibodies, it is no longer able to infect susceptible cell cultures.

TESTS

Bacterial and fungal contamination. The reconstituted vaccine complies with the test for sterility (*2.6.1*).

Bovine serum albumin. Not more than 50 ng per single human dose, determined by a suitable immunochemical method (*2.7.1*).

Water (*2.5.12*). Not more than 3.0 per cent, determined by the semi-micro determination of water.

ASSAY

Titrate the vaccine for infective virus, using at least 3 separate vials of vaccine and inoculating a suitable number of wells for each dilution step. Titrate 1 vial of an appropriate virus reference preparation in triplicate to validate each assay. The virus concentration of the reference preparation is monitored using a control chart and a titre is established on a historical basis by each laboratory. The relation with the appropriate European Pharmacopoeia Biological Reference Preparation is established and monitored at regular intervals if a manufacturer's reference preparation is used. Calculate the individual virus concentration for each vial of vaccine and for each replicate of the reference preparation as well as the corresponding combined virus concentrations, using the usual statistical methods (for example, *5.3*). The combined estimate of the virus concentration for the 3 vials of vaccine is not less than that stated on the label; the minimum virus concentration stated on the label is not less than 3.0 $\log_{10}$ $CCID_{50}$ per single human dose.

The assay is not valid if:

- the confidence interval (P = 0.95) of the estimated virus concentration of the reference preparation for the 3 replicates combined is greater than ± 0.3 $\log_{10}$ $CCID_{50}$;
- the virus concentration of the reference preparation differs by more than 0.5 $\log_{10}$ $CCID_{50}$ from the established value.

The assay is repeated if the confidence interval (P = 0.95) of the combined virus concentration of the vaccine is greater than ± 0.3 $\log_{10}$ $CCID_{50}$; data obtained from valid assays only are combined by the usual statistical methods (for example, *5.3*) to calculate the virus concentration of the sample. The confidence interval (P = 0.95) of the combined virus concentration is not greater than ± 0.3 $\log_{10}$ $CCID_{50}$.

Rubella vaccine (live) BRP is suitable for use as a reference preparation.

Where justified and authorised, different assay designs may be used; this may imply the application of different validity and acceptance criteria. However, the vaccine must comply if tested as described above.

LABELLING

The label states:

- the strain of virus used for the preparation of the vaccine;
- the type and origin of the cells used for the preparation of the vaccine;
- the minimum virus concentration;
- that contact between the vaccine and disinfectants is to be avoided.

Vaccines

01/2009:2418

SHINGLES (HERPES ZOSTER) VACCINE (LIVE)

Vaccinum zonae vivum

DEFINITION

Shingles (herpes zoster) vaccine (live) is a freeze-dried preparation of a suitable attenuated strain of human herpesvirus 3. The vaccine is reconstituted immediately before use, as stated on the label, to give a clear or slightly opalescent liquid, almost white suspension or pale yellow liquid that may be coloured owing to the presence of a pH indicator. It is intended for administration to adults.

PRODUCTION

The production of vaccine is based on a virus seed-lot system and a cell-bank system. The production method shall have been shown to yield consistently live shingles vaccines of adequate immunogenicity and safety in man. The virus in the final vaccine shall not have been passaged in cell cultures beyond a defined number of passages approved by the competent authority from the original isolated virus.

The potential neurovirulence of the vaccine strain is considered during preclinical development, based on available epidemiological data on neurovirulence and neurotropism, primarily for the wild-type virus. In light of this, a risk analysis is carried out. Where necessary and if available, a test is carried out on the vaccine strain using an animal model that differentiates wild-type and attenuated virus; tests on strains of intermediate attenuation may also be needed.

The production method is validated to demonstrate that the product, if tested, would comply with the test for abnormal toxicity for immunosera and vaccines for human use (*2.6.9*).

SUBSTRATE FOR VIRUS PROPAGATION

The virus is propagated in human diploid cells (*5.2.3*).

VIRUS SEED LOT

The strain of human herpesvirus 3 shall be identified as being suitable by historical records that include information on the origin of the strain and its subsequent manipulation. The virus shall at no time have been passaged in continuous cell lines. Seed lots are prepared in the same kind of cells as those used for the production of the final vaccine. Virus seed lots are prepared in large quantities and stored at temperatures below − 20 °C if freeze-dried, or below − 60 °C if not freeze-dried.

Only a virus seed lot that complies with the following requirements may be used for virus propagation.

Identification. The master and working seed lots are identified as human herpesvirus 3 by serum neutralisation in cell culture, using specific antibodies.

Virus concentration. The virus concentration of the master and working seed lots is determined as prescribed under Assay to monitor consistency of production.

Extraneous agents (*2.6.16*). The working seed lot complies with the requirements for seed lots for live virus vaccines; a sample of 50 mL is taken for the test in cell cultures.

VIRUS PROPAGATION AND HARVEST

All processing of the cell bank and subsequent cell cultures is done under aseptic conditions in an area where no other cells or virus are being handled. Approved animal (but not human) serum may be used in the culture media. Serum and trypsin used in the preparation of cell suspensions and media are shown to be free from extraneous agents. The cell culture medium may contain a pH indicator such as phenol red and approved antibiotics at the lowest effective concentration. It is preferable to have a substrate free from antibiotics during production. 5 per cent, but not less than 50 mL, of the cell cultures employed for vaccine production is set aside as uninfected cell cultures (control cells). The infected cells constituting a single harvest are washed, released from the support surface and pooled. The cell suspension is disrupted by sonication.

Only a virus harvest that complies with the following requirements may be used in the preparation of the final bulk vaccine.

Identification. The virus harvest contains virus that is identified as human herpesvirus 3 by serum neutralisation in cell culture, using specific antibodies.

Virus concentration. The concentration of infective virus in virus harvests is determined as prescribed under Assay to monitor consistency of production and to determine the dilution to be used for the final bulk vaccine.

Extraneous agents (*2.6.16*). Use 50 mL for the test in cell cultures.

Control cells. The control cells of the production cell culture from which the single harvest is derived comply with a test for identity and with the requirements for extraneous agents (*2.6.16*).

FINAL BULK VACCINE

Virus harvests that comply with the above tests are pooled and clarified to remove cells. A suitable stabiliser may be added and the pooled harvests diluted as appropriate.

Only a final bulk vaccine that complies with the following requirements may be used in the preparation of the final lot.

Bacterial and fungal contamination. Carry out the test for sterility (*2.6.1*) using 10 mL for each medium.

FINAL LOT

The final bulk vaccine is distributed aseptically into sterile, tamper-proof containers and freeze-dried to a moisture content shown to be favourable to the stability of the vaccine. The containers are then closed so as to prevent contamination and the introduction of moisture.

Only a final lot that is satisfactory with respect to the test for water and each of the requirements given below under Identification, Tests and Assay may be released for use. Provided that the test for bovine serum albumin has been carried out with satisfactory results on the final bulk vaccine, it may be omitted on the final lot.

Water (*2.5.12*). Not more than the amount shown to ensure stability of the vaccine as approved by the competent authority, determined by the semi-micro determination of water.

IDENTIFICATION

When the vaccine reconstituted as stated on the label is mixed with specific human herpesvirus 3 antibodies, it is no longer able to infect susceptible cell cultures.

TESTS

Bacterial and fungal contamination. The reconstituted vaccine complies with the test for sterility (*2.6.1*).

Bovine serum albumin: maximum 0.65 µg per human dose, determined by a suitable immunochemical method (*2.7.1*).

ASSAY

Titrate the vaccine for infective virus, using at least 3 separate vials of vaccine. Titrate 1 vial of an appropriate virus reference preparation in triplicate to validate each assay. The virus concentration of the reference preparation is monitored using a control chart and a titre is established on a historical basis by each laboratory. Calculate the individual virus concentration for each vial of vaccine and for each replicate of the reference preparation as well as the corresponding combined virus concentrations, using the usual statistical methods (for example, *5.3*). The combined estimate of the virus concentration for the 3 vials of vaccine is not less than that stated on the label.

The assay is not valid if:

- the confidence interval (P = 0.95) of the estimated virus concentration of the reference preparation for the 3 replicates combined is greater than ± 0.3 $\log_{10}$ PFU;
- the virus concentration of the reference preparation differs by more than 0.5 $\log_{10}$ PFU from the established value.

The assay is repeated if the confidence interval (P = 0.95) of the combined virus concentration of the vaccine is greater than ± 0.3 $\log_{10}$ PFU; data obtained from valid assays only are combined by the usual statistical methods (for example, *5.3*) to calculate the virus concentration of the sample. The confidence interval (P = 0.95) of the combined virus concentration is not greater than ± 0.3 $\log_{10}$ PFU.

Where justified and authorised, different assay designs may be used; this may imply the application of different validity and acceptance criteria. However, the vaccine must comply if tested as described above.

LABELLING

The label states:

- the strain of virus used for the preparation of the vaccine;
- the type and origin of the cells used for the preparation of the vaccine;
- the minimum virus concentration;
- that contact between the vaccine and disinfectants is to be avoided;
- that the vaccine is not to be administered to pregnant women.

01/2012:0164

SMALLPOX VACCINE (LIVE)

Vaccinum variolae vivum

DEFINITION

Smallpox vaccine (live) is a liquid or freeze-dried preparation of live vaccinia virus grown *in ovo* in the membranes of the chick embryo, in cell cultures or in the skin of living animals.

This monograph applies to vaccines produced using strains of confirmed efficacy in man, in particular those used during eradication of smallpox, for example the Lister strain (sometimes referred to as the Lister/Elstree strain) and the New York City Board of Health (NYCBOH) strain. It does not apply to non-replicative strains such as Modified Virus Ankara (MVA).

PRODUCTION

GENERAL PROVISIONS

The production method shall have been shown to yield consistently smallpox vaccines of adequate safety and immunogenicity in man. The strain used shall have been shown to produce typical vaccinia skin lesions in man. Production is based on a seed-lot system.

The production method is validated to demonstrate that the product, if tested, would comply with the test for abnormal toxicity of immunosera and vaccines for human use (*2.6.9*).

The International Reference Preparation for smallpox vaccine is suitable for use as a reference preparation in virus titration.

SUBSTRATE FOR VIRUS PROPAGATION

Animals used for production of skin-derived vaccines. If the vaccine is prepared in animals skins, the animals used are of a species approved by the competent authority, are in good health, are kept in closed or intensively monitored colonies, and have not previously been employed for experimental purposes. Only animals susceptible to infection by dermal inoculations with vaccinia virus may be used for vaccine production.

The animals are kept in well-constructed and adequately ventilated animals rooms with cages spaced as far apart as possible. Adequate precautions are taken to prevent cross-infection between cages. Not more than 1 large animal is housed per stall. Not more than 2 small animals are housed per cage and cage-mates must not be interchanged. The animals must be kept in the country of production of the vaccine in quarantine groups for a period of not less than 6 weeks before use.

If at any time during the quarantine period the overall death rate of the group reaches 5 per cent, no animals from that entire group may be used for vaccine production.

The groups are kept continuously in isolation, as in quarantine, even after completion of the quarantine period, until the animals are used. After the last animal of a group has been taken, the room that housed the group is thoroughly cleaned and decontaminated before receiving a new group.

Animals that are to be inoculated are anaesthetised and thoroughly examined. If an animal shows any pathological lesion, it is not used in the preparation of a seed lot or a vaccine, nor are any of the remaining animals of the quarantine group concerned unless it is evident that their use will not impair the safety of the product.

The prophylactic and diagnostic measures adopted to exclude the presence of infectious disease are approved by the competent authority. According to the species of animals used and the diseases to which that animal is liable in the country where the vaccine is being produced, these measures may vary. Consideration must also be given to the danger of spreading diseases to other countries to which the vaccine may be shipped. Special attention must always be given to foot-and-mouth disease, brucellosis, Q fever, tuberculosis and dermatomycosis, and it may also be necessary to consider diseases such as contagious pustular dermatitis (orf), anthrax, rinderpest, haemorrhagic septicaemia, Rift valley fever and others.

Embryonated eggs. Embryonated eggs used for production are obtained from a flock free from specified pathogens (SPF) (*5.2.2*).

Human diploid cells, continuous cell lines. Human diploid cells and continuous cell lines comply with the requirements for cell substrates (*5.2.3*).

Primary chick embryo cells. Primary chick embryo cells are derived from an SPF flock (*5.2.2*).

Primary rabbit kidney cells. Only healthy rabbits derived from a closed colony approved by the competent authority are used as a source. The animals, preferably 2-4 weeks old, are tested to ensure freedom from specified pathogens or their antibodies.

Where new animals are introduced into the colony, they are maintained in quarantine for a minimum of 2 months and shown to be free from specified pathogens. Animals to be used to provide kidneys shall not have been previously employed for experimental purposes, especially those involving infectious agents. The colony is monitored for zoonotic viruses and markers of contamination at regular intervals.

At the time the colony is established, all animals are tested to determine freedom from antibodies to possible viral contaminants for which there is evidence of capacity for infecting humans or evidence of capacity to replicate *in vitro* in cells of human origin. A test for retroviruses using a sensitive polymerase chain reaction (PCR)-based reverse transcriptase assay is also included. Nucleic acid amplification tests (*2.6.21*) for retroviruses may also be used.

After the colony is established, it is monitored by testing a representative group of at least 5 per cent of the animals, which are then bled at suitable (for example monthly)

intervals. In addition, the colony is screened for pathogenic micro-organisms, including mycobacteria, fungi and mycoplasmas. The screening programme is designed to ensure that all animals are tested within a given period of time.

Any animal that dies is examined to determine the cause of death. If the presence of a causative infectious agent is demonstrated in the colony, the production of smallpox vaccine is discontinued.

At the time of kidney harvest, the animals are examined for the presence of abnormalities and, if any are noted, the animals are not used for vaccine production.

Each set of control cultures derived from a single group of animals used to produce a single virus harvest must remain identifiable as such until all testing, especially for extraneous agents, is completed.

VIRUS SEED LOT

The vaccinia virus isolate used for the master seed lot is identified by historical records that include information on its origin and the tests used in its characterisation.

Virus from the working seed lot must have the same characteristics as the strain that was used to prepare the master seed lot. The number of passages required to produce single harvests from the original isolate is limited and approved by the competent authority. Vaccine is produced from the working seed with a minimum number of intervening passages.

Since cell culture production and clonal selection (for example, plaque purification) may lead to altered characteristics of the virus, the master seed virus must be characterised as fully as possible, for example by comparing the safety profile and biological characteristics of the strain with that of the parental isolate. The characterisation shall include the following:

- antigenic analyses using specific antisera and/or monoclonal antibodies;
- biological studies such as infectivity titre, chorioallantoic membrane (CAM) assay, *in vitro* yield and *in vivo* growth characteristics in a suitable animal model;
- genetic analyses such as restriction mapping/southern blotting, PCR analyses and limited sequencing studies;
- phenotypic and genetic stability upon passage in the substrate;
- neurovirulence testing and immunogenicity studies.

The characterisation tests are also carried out on each working seed lot and on 3 batches of vaccine from the first working seed lot to verify genetic stability of the vaccine strain.

Only a virus seed that complies with the following requirements may be used for virus propagation.

Identification. Each working seed lot is identified as vaccinia virus using specific antibodies and molecular tests. Suitable tests are conducted to exclude the presence of variola virus and other orthopoxviruses.

Virus concentration. Determine by the CAM assay or by a suitable validated *in vitro* assay (plaque assay or $CCID_{50}$ assay). The virus concentration is the basis for the quantity of virus used in the neurovirulence test.

Extraneous agents (*2.6.16*). If the working seed lot is produced in embryonated eggs, human diploid cells, or in a continuous cell line, it complies with the requirements for seed lots for virus vaccines. Seed lots produced in embryonated eggs and seed lots produced in primary cell cultures comply with the additional requirements described below.

Where the tests prescribed cannot be carried out because complete neutralisation of the seed virus is not possible, the seed lot may be diluted to a concentration equivalent to that of the dilution used as inoculum for production of vaccine prior to testing for extraneous viruses. Supplementary specific testing for extraneous viruses using validated nucleic acid amplification techniques (*2.6.21*) or immunochemical methods (*2.7.1*) may be envisaged. Where the indicator cell culture method for mycoplasma detection (*2.6.7*) cannot be carried out, nucleic acid amplification testing is performed instead.

Seed lots to be used for embryonated egg or cell culture production are in addition to be tested for carry-over of potential extraneous agents from the original seed. Given that the complete passage history of the original seed is unlikely to be known and that more than one species may have been used, this additional testing must at least cover important extraneous agents of concern.

The bioburden of master and working seed lots prepared in animal skins is limited by meticulous controls of facilities, personnel, and animals used for production, and by specific tests on the seeds. However, it may be difficult to ensure that seed lots produced in animal skins are totally free from extraneous agents, and consideration must be given to production procedures which remove or reduce them. Such lots must comply with the requirements indicated below. The absence of specific human pathogens is confirmed by additional testing procedures, for example, bacterial and fungal cultures, virus culture, nucleic acid amplification testings (*2.6.21*) for viral agents.

Neurovirulence. The neurovirulence of master and working seed lots is assessed using a suitable animal model, for example in monkeys or mice. The parental isolate is used as comparator. Where the original isolate is not available for this purpose, equivalent materials may be used.

VIRUS PROPAGATION AND HARVEST

VACCINE PRODUCED IN LIVING ANIMALS

Before inoculation the animals are cleaned and thereafter kept in scrupulously clean stalls until the vaccinia material is harvested. For 5 days before inoculation and during incubation the animals remain under veterinary supervision and must remain free from any sign of disease; daily rectal temperatures are recorded. If any abnormal rise in temperature occurs or any clinical sign of disease is observed, the production of vaccine from the group of animals concerned must be suspended until the cause has been resolved.

The inoculation of seed virus is carried out on such parts of the animal that are not liable to be soiled by urine and faeces. The surface used for inoculation is shaved and cleaned so as to achieve conditions that are as close as possible to surgical asepsis. If any antiseptic substance deleterious to the virus is used in the cleaning process it is removed by thorough rinsing with sterile water prior to inoculation. During inoculation the exposed surface of the animal not used for inoculation is covered with a sterile covering. By historical experience the ventral surface of female animals is appropriate for inoculation and inoculation of male animals is more appropriate on the flank.

Before the collection of the vaccinia material, any antibiotic is removed and the inoculated area is cleaned. The uninoculated surfaces are covered with a sterile covering. Before harvesting the animals are euthanised and exsanguinated to avoid heavy mixtures of the vaccinia material with blood. The vaccinia material from each animal is collected separately with aseptic precautions. All animals used in the production of vaccine are examined by autopsy. If evidence of any generalised or systemic disease other than vaccinia is found, the vaccinia material from that animal is discarded. If the disease is considered to be a communicable one, the harvest from the entire group of animals exposed must be discarded unless otherwise justified and authorised.

VACCINE PRODUCED IN EGGS

All processing of embryonated eggs is done under aseptic conditions in an area where no other infectious agents or cells are handled at the same time. After inoculation and incubation at a controlled temperature only living and suitable chick embryos are harvested. The age of the embryos at the time of virus harvest is reckoned from the initial introduction of the egg into the incubator and shall be not

more than 12 days. After homogenisation and clarification by centrifugation, the extract of embryonic pulp is tested as described below and kept at – 70 °C or below until further processing. Virus harvests that comply with the prescribed tests may be pooled. No human protein is added to the virus suspension at any stage during production. If stabilisers are added, they shall have been shown to have no antigenic or sensitising properties for man.

Only a single harvest that complies with the following requirements may be used in the preparation of the final bulk vaccine.

Control eggs. Control eggs comply with the tests for extraneous agents (*2.6.16*). A sample of 2 per cent of uninoculated embryonated eggs (not less than 20 and not more than 50) from the batch used for vaccine production shall be incubated under the same conditions as the inoculated eggs. At the time of virus harvest the uninoculated eggs are processed in the same manner as the inoculated eggs.

Sterility (*2.6.1*). It complies with the test for sterility, carried out using 10 mL for each medium.

VACCINE PRODUCED IN CELL CULTURES (PRIMARY CHICK EMBRYO CELLS, PRIMARY RABBIT KIDNEY CELLS, HUMAN DIPLOID CELLS OR CONTINUOUS CELL LINES)

All processing of the cell bank and subsequent cell cultures is done under aseptic conditions in an area where no other cells are handled at the same time during production. Suitable animal (but not human) serum may be used in the culture media, but the final medium for maintaining cell growth during virus multiplication does not contain animal serum. Serum and trypsin used in the preparation of cell suspensions and media are shown to be free from extraneous agents. The cell culture medium may contain a pH indicator such as phenol red and suitable antibiotics at the lowest effective concentration. It is preferable to have a substrate free from antibiotics during production. On the day of inoculation with the virus working seed lot, not less than 5 per cent or 1000 mL, whichever is the least, of the cell cultures employed for vaccine production are set aside as uninfected cell cultures (control cells); special requirements, given below, apply to control cells when the vaccine is produced in primary rabbit kidney cell cultures.

After inoculation of the production cell culture with the working seed lot, inoculated cells are maintained at a suitable fixed temperature, and the virus suspension is harvested after a suitable incubation period.

Only a single harvest that complies with the following requirements may be used in the preparation of the monovalent pooled harvest.

Control cells. The control cells of the production cell culture from which the virus harvest is derived comply with a test for identity and with the requirements for extraneous agents (*2.6.16*) or, where primary rabbit kidney cells cultures are used, with specific tests as mentioned hereafter. The test is invalid if more than 20 per cent of the control cell cultures have been discarded at the end of the observation period.

Extraneous agents (*2.6.16*). The single harvest complies with the tests for extraneous agents. Complete neutralisation of vaccinia virus may be difficult to achieve at high virus concentration. In this case specific tests such as nucleic acid amplification (*2.6.21*) and immunochemical tests (*2.7.1*) can replace non-specific testing in cell culture or eggs. To save biological reagents such as vaccinia neutralising antisera, testing for extraneous agents may be performed on the final bulk instead of on the single harvests.

Vaccine prepared in primary chick embryo cells. A sample of fluids pooled from the control cultures is tested for adenoviruses and for avian retroviruses such as avian leukosis virus. In addition, a volume of each neutralised virus pool equivalent to 100 human doses of vaccine or 10 mL, whichever is the greater, is tested in a group of fertilised eggs by the allantoic route of inoculation, and a similar sample is tested in a separate group of eggs by the yolk-sac route of inoculation. In both cases 0.5 mL of inoculum is used per egg. The virus pool passes the test if, after 3-7 days, there is no evidence of the presence of any extraneous agent.

Vaccine prepared in primary rabbit kidney cell cultures. The following special requirements apply to virus propagation, harvest and testing. On the day of inoculation with virus working seed, a sample of at least 30 mL of the pooled fluid is removed from the cell cultures of the kidneys of each group of animals used to prepare the primary cell suspension. The pooled fluid is inoculated in primary kidney cell cultures in such a way that the dilution of the pooled fluid does not exceed 1 in 4. The cultures are incubated at a temperature of 34-36 °C and observed for a period of at least 4 weeks. During this observation period and after not less than 2 weeks of incubation, at least 1 subculture of fluid is made from each of these cultures and observed also for a period of 2 weeks. The test is invalid if more than 20 per cent of the cultures are discarded. If evidence is found of the presence of an extraneous agent, no cell cultures from the entire group may be used for vaccine production.

- *Control cell cultures.* Cultures prepared on the day of inoculation with the working virus seed lot from 25 per cent of the cell suspensions obtained from the kidneys of each group of animals are maintained as controls. These control cell cultures are incubated under the same conditions as the inoculated cultures for at least 2 weeks. The test is invalid if more than 20 per cent of the control cell cultures are discarded for non-specific reasons.
- *Test for haemadsorbing viruses.* At the time of harvest or not more than 4 days after the day of inoculation of the production cultures with the virus working seed, a sample of 4 per cent of the control cell cultures is tested for haemadsorbing viruses by addition of guinea-pig red blood cells.
- *Test for other extraneous agents.* At the time of harvest or not more than 7 days after the day of inoculation of the production cultures with the virus working seed, a sample of at least 20 mL of the pooled fluid from each group of control cultures is tested for other extraneous agents.
- *Tests of neutralised single harvest in primary rabbit kidney cell cultures.* Each neutralised single harvest is additionally tested in primary kidney cell cultures prepared from a different group of animals to that used for production.

POOLED HARVEST

Only a pooled harvest that complies with the following requirements and is within the limits approved for the product may be used in the preparation of the final lot.

Identity. The vaccinia virus in the pooled harvest is identified by serological methods, which may be supplemented by molecular methods. Molecular tests such as restriction fragment length polymorphism or partial sequencing, especially of terminal DNA sequences which show the greatest variation between vaccinia strains, may be useful.

Virus concentration. The vaccinia virus concentration of the pooled harvest is determined by chick egg CAM assay or in cell cultures. A reference preparation is assayed in the same system in parallel for validation of the pooled harvest titration. The virus concentration serves as the basis for the quantity of virus used in the neurovirulence test in mice.

Consistency of virus characteristics. Vaccinia virus in the pooled harvest or the final bulk is examined by tests that are able to determine that the phenotypic and genetic characteristics of the vaccinia virus have not undergone changes during the multiplication in the production system. The master seed or an equivalent preparation is used as a comparator in these tests and the comparator and the tests to be used are approved by the competent authority.

Neurovirulence. The neurovirulence of the pooled harvest is assessed versus a comparator original seed (or equivalent) by intracerebral inoculation into suckling mice. Other tests may be useful to discriminate between acceptable and unacceptable batches.

Residual DNA. For viruses grown in continuous cells the pooled harvest is tested for residual DNA. The production process demonstrates a level of cellular DNA of less than 10 ng per human dose.

Bacterial and fungal contamination. For vaccines other than those prepared on animal skins, the final bulk complies with the test for sterility (*2.6.1*) using 10 mL for each medium.

Mycoplasma (*2.6.7*). For vaccines other than those prepared on animal skins, the final bulk complies with the test for mycoplasma, carried out using 10 mL.

FINAL BULK VACCINE

A minimum virus concentration for release of the product is established such as to ensure, in the light of stability data, that the minimum concentration stated on the label will be present at the end of the period of validity.

VACCINE PRODUCED IN LIVING ANIMALS

The pooled harvest is centrifuged. If the vaccine is intended for issue in the liquid form, treatment to reduce the presence of extraneous agents may consist of the addition of glycerol or another suitable diluent, with or without an antimicrobial substance, and temporary storage at a suitable temperature. If the vaccine is intended for issue in the dried form, the treatment may consist of the addition of a suitable antimicrobial substance. The following special requirements apply to the bulk vaccine for vaccines produced in living animals.

Only a final bulk vaccine that complies with the following requirements may be used in the preparation of the final lot.

Total bacterial count: for vaccines produced on animal skins only, maximum 50 per millilitre, determined by plate count using a suitable volume of the final bulk vaccine.

Escherichia coli. At least 1 mL samples of a 1:100 dilution of the final bulk vaccine is cultured on plates of a medium suitable for differentiating *E. coli* from other bacteria. The plates are incubated at 35-37 °C for 48 h. If *E. coli* is detected the final bulk is discarded or, subject to approval by the competent authority, processed further.

Haemolytic streptococci, coagulase-positive staphylococci or any other pathogenic micro-organisms which are known to be harmful to man by vaccination. At least 1 mL samples of a 1:100 dilution of the final bulk vaccine are cultured on blood agar. The plates are incubated at 35-37 °C for 48 h. If micro-organisms are detected, the final bulk vaccine is discarded.

Bacillus anthracis. Any colony seen on any of the plates that morphologically resembles *B. anthracis* is examined. If the organisms contained in the colony are non-motile, further tests for the cultural character of *B. anthracis* are carried out, including pathogenicity tests in suitable animals. If *B. anthracis* is found to be present, the final bulk vaccine and any other associated bulks are discarded. Additional validated molecular testing may be performed.

***Clostridium tetani* and other pathogenic spore-forming anaerobes**. A total volume of not less than 10 mL of the final bulk vaccine is distributed in equal amounts into 10 tubes, each containing not less than 10 mL of suitable medium for the growth of anaerobic micro-organisms. The tubes are kept at 65 °C for 1 h in order to reduce the content of non-spore-forming organisms, after which they are anaerobically incubated at 35-37 °C for at least 1 week. From every tube or plate showing growth, subcultures are made on plates of a suitable medium. Tubes and plates are incubated anaerobically at the same temperature. All anaerobic colonies are examined and identified and if *C. tetani* or other pathogenic spore-forming anaerobes are present, the final bulk is discarded.

VACCINE PRODUCED IN EGGS

The pooled harvest is clarified and may be further purified.

VACCINE PRODUCED IN CELL CULTURES (PRIMARY CHICK EMBRYOS FIBROBLASTS, HUMAN DIPLOID CELLS OR CONTINUOUS CELL LINES)

The pooled harvest is clarified to remove cells and may be further purified.

FINAL LOT

Only a final lot that complies with the requirements for minimum virus concentration for release, with the following requirement for thermal stability and with each of the requirements given below under Identification, Tests and Assay may be released for use. Provided that the tests for antimicrobial preservative, protein content, bovine serum albumin and ovalbumin have been carried out with satisfactory results on the final bulk vaccine, they may be omitted on the final lot.

Thermal stability.

For liquid products, maintain not fewer than 3 containers of the final lot at an elevated temperature for a defined time period, using conditions found suitable for the particular product as approved by the competent authority. Determine the virus concentration as described under Assay in parallel for the heated vaccine and for vaccine stored at the temperature recommended for storage. The virus concentration of the containers that have been heated does not decrease by more than an approved amount during the period of exposure. The conditions of the test and the requirements are approved by the competent authority.

For freeze-dried products, maintain at least 3 containers of the final lot in the dry state at 37 ± 1 °C for 28 days. Determine the virus concentration as described under Assay in parallel for the heated vaccine and for vaccine stored at the temperature recommended for storage. The virus concentration of the heated vaccine is not more than 1.0 $\log_{10}$ lower than that of the unheated vaccine.

IDENTIFICATION

The vaccinia virus is identified by an appropriate method.

TESTS

Antimicrobial preservative. Where applicable determine the amount of antimicrobial preservative by a suitable chemical method. The content is not less than the minimum amount shown to be effective and is not greater than 115 per cent of the quantity stated on the label.

Phenol (*2.5.15*): maximum 0.5 per cent, if phenol is used.

Protein content. The protein content of each filling lot, if not done on the final bulk, is determined and is within the limits approved by the competent authority.

Bovine serum albumin: maximum 50 ng per single human dose, determined by a suitable immunochemical method (*2.7.1*), where bovine serum albumin is used during cell culture.

Ovalbumin. For vaccines produced in embryonated eggs, the ovalbumin content is within the limits approved by the competent authority.

Residual moisture. The residual moisture content of each final lot of freeze-dried vaccines is within the limits approved by the competent authority.

Bacterial count. For skin-derived vaccines, examine the vaccine by suitable microscopic and culture methods for micro-organisms pathogenic for man and, in particular, haemolytic streptococci, staphylococci, pathogenic

spore-bearing organisms, especially *B. anthracis*, and *E. coli*. The vaccine is free from such contaminants. The total number of non-pathogenic bacteria does not exceed 50 per millilitre.

Sterility (*2.6.1*). Except for skin-derived vaccines, the vaccine complies with the test for sterility.

Bacterial endotoxins (*2.6.14*). The vaccine complies with the specification approved by the competent authority.

ASSAY

Reconstitue the vaccine if necessary and titrate for infectious virus using at least 3 separate containers of vaccine. Titrate 1 container of an appropriate virus reference preparation in triplicate to validate each assay. The virus concentration of the reference preparation is monitored using a control chart and a titre is established on a historical basis by each laboratory. Calculate the individual virus concentration for each container of vaccine and for each replicate of the reference preparation as well as the corresponding combined virus concentrations, using the usual statistical methods (for example, *5.3*). The combined virus concentration for the 3 containers of vaccine is not less than 8.0 $\log_{10}$ pock-forming units per millilitre or the validated equivalent in plaque-forming units or 50 per cent cell culture infective doses, unless a lower titre is justified by clinical studies.

The assay is not valid if:

- the confidence interval (P = 0.95) of the estimated virus concentration of the reference preparation for the 3 replicates combined is greater than ± 0.5 $\log_{10}$ infectious units;
- the virus concentration of the reference preparation differs by more than 0.5 $\log_{10}$ infectious units from the established value.

The assay is repeated if the confidence interval (P = 0.95) of the combined virus concentration of the vaccine is greater than ± 0.5 $\log_{10}$ infectious units; data obtained from valid assays only are combined by the usual statistical methods (for example, *5.3*) to calculate the virus concentration of the sample. The confidence interval (P = 0.95) of the combined virus concentration is not greater than ± 0.5 $\log_{10}$ infectious units.

Where justified and authorised, different assay designs may be used; this may imply the application of different validity and acceptance criteria. However, the vaccine must comply if tested as described above.

LABELLING

The label states:

- the designation of the vaccinia virus strain;
- the minimum amount of virus per millilitre;
- the substrate used for the preparation of the vaccine;
- the nature and amount of stabiliser, preservative or additive present in the vaccine and/or in the diluent.

01/2008:0452
corrected 6.0

TETANUS VACCINE (ADSORBED)

Vaccinum tetani adsorbatum

DEFINITION

Tetanus vaccine (adsorbed) is a preparation of tetanus formol toxoid with a mineral adsorbent. The formol toxoid is prepared from the toxin produced by the growth of *Clostridium tetani*.

PRODUCTION

GENERAL PROVISIONS

Specific toxicity. The production method is validated to demonstrate that the product, if tested, would comply with the following test: inject subcutaneously 5 times the single human dose stated on the label into each of 5 healthy guinea-pigs, each weighing 250-350 g, that have not previously been treated with any material that will interfere with the test. If within 21 days of the injection any of the animals shows signs of or dies from tetanus, the vaccine does not comply with the test. If more than 1 animal dies from non-specific causes, repeat the test once; if more than 1 animal dies in the second test, the vaccine does not comply with the test.

BULK PURIFIED TOXOID

For the production of tetanus toxin, from which toxoid is prepared, seed cultures are managed in a defined seed-lot system in which toxinogenicity is conserved and, where necessary, restored by deliberate reselection. A highly toxinogenic strain of *Clostridium tetani* with known origin and history is grown in a suitable liquid medium. At the end of cultivation, the purity of each culture is tested and contaminated cultures are discarded. Toxin-containing culture medium is collected aseptically. The toxin content (Lf per millilitre) is checked (*2.7.27*) to monitor consistency of production. Single harvests may be pooled to prepare the bulk purified toxoid. The toxin is purified to remove components likely to cause adverse reactions in humans. The purified toxin is detoxified with formaldehyde by a method that avoids destruction of the immunogenic potency of the toxoid and reversion of toxoid to toxin, particularly on exposure to heat. Alternatively, purification may be carried out after detoxification.

Only bulk purified toxoid that complies with the following requirements may be used in the preparation of the final bulk vaccine.

Sterility (*2.6.1*). Carry out the test for sterility using 10 mL for each medium.

Absence of toxin and irreversibility of toxoid. Using the same buffer solution as for the final vaccine, without adsorbent, prepare a solution of bulk purified toxoid at the same concentration as in the final vaccine. Divide the dilution into 2 equal parts. Keep one of them at 5 ± 3 °C and the other at 37 °C for 6 weeks. Test both dilutions as described below. Use 15 guinea-pigs, each weighing 250-350 g and that have not previously been treated with any material that will interfere with the test. Inject subcutaneously into each of 5 guinea-pigs 5 mL of the dilution incubated at 5 ± 3 °C. Inject subcutaneously into each of 5 other guinea-pigs 5 mL of the dilution incubated at 37 °C. Inject subcutaneously into each of 5 guinea-pigs at least 500 Lf of the non-incubated bulk purified toxoid in a volume of 1 mL. The bulk purified toxoid complies with the test if during the 21 days following the injection no animal shows signs of or dies from tetanus. If more than 1 animal dies from non-specific causes, repeat the test; if more than 1 animal dies in the second test, the toxoid does not comply with the test.

Antigenic purity (*2.7.27*). Not less than 1000 Lf per milligram of protein nitrogen.

FINAL BULK VACCINE

The final bulk vaccine is prepared by adsorption of a suitable quantity of bulk purified toxoid onto a mineral carrier such as hydrated aluminium phosphate or aluminium hydroxide; the resulting mixture is approximately isotonic with blood. Suitable antimicrobial preservatives may be added. Certain antimicrobial preservatives, particularly those of the phenolic type, adversely affect the antigenic activity and must not be used.

Only final bulk vaccine that complies with the following requirements may be used in the preparation of the final lot.

Antimicrobial preservative. Where applicable, determine the amount of antimicrobial preservative by a suitable chemical method. The amount is not less than 85 per cent and not greater than 115 per cent of the intended amount.

Sterility (*2.6.1*). Carry out the test for sterility using 10 mL for each medium.

FINAL LOT

The final bulk vaccine is distributed aseptically into sterile, tamper-proof containers. The containers are closed so as to prevent contamination.

Only a final lot that is satisfactory with respect to each of the requirements given below under Identification, Tests and Assay may be released for use. Provided the test for antimicrobial preservative and the assay have been carried out with satisfactory results on the final bulk vaccine, they may be omitted on the final lot.

Provided the free formaldehyde content has been determined on the bulk purified toxoid or on the final bulk and it has been shown that the content in the final lot will not exceed 0.2 g/L, the test for free formaldehyde may be omitted on the final lot.

IDENTIFICATION

Tetanus toxoid is identified by a suitable immunochemical method (*2.7.1*). The following method, applicable to certain vaccines, is given as an example. Dissolve in the vaccine to be examined sufficient *sodium citrate R* to give a 100 g/L solution. Maintain at 37 °C for about 16 h and centrifuge until a clear supernatant is obtained. The clear supernatant reacts with a suitable tetanus antitoxin, giving a precipitate.

TESTS

Aluminium (*2.5.13*): maximum 1.25 mg per single human dose, if aluminium hydroxide or hydrated aluminium phosphate is used as the adsorbent.

Free formaldehyde (*2.4.18*): maximum 0.2 g/L.

Antimicrobial preservative. Where applicable, determine the amount of antimicrobial preservative by a suitable chemical method. The content is not less than the minimum amount shown to be effective and is not greater than 115 per cent of the quantity stated on the label.

Sterility (*2.6.1*). The vaccine complies with the test for sterility.

ASSAY

Carry out one of the prescribed methods for the assay of tetanus vaccine (adsorbed) (*2.7.8*).

The lower confidence limit ($P = 0.95$) of the estimated potency is not less than 40 IU per single human dose.

LABELLING

The label states:

- the minimum number of International Units per single human dose,
- the name and the amount of the adsorbent,
- that the vaccine must be shaken before use,
- that the vaccine is not to be frozen.

01/2008:1375

TICK-BORNE ENCEPHALITIS VACCINE (INACTIVATED)

Vaccinum encephalitidis ixodibus advectae inactivatum

DEFINITION

Tick-borne encephalitis vaccine (inactivated) is a liquid preparation of a suitable strain of tick-borne encephalitis virus grown in cultures of chick-embryo cells or other suitable cell cultures and inactivated by a suitable, validated method.

PRODUCTION

GENERAL PROVISIONS

Production of the vaccine is based on a virus seed-lot system. The production method shall have been shown to yield consistently vaccines comparable with the vaccine of proven clinical efficacy and safety in man. Unless otherwise justified and authorised, the virus in the final vaccine shall not have undergone more passages from the master seed lot than the virus in the vaccine used in clinical trials.

The production method is validated to demonstrate that the product, if tested, would comply with the test for abnormal toxicity for immunosera and vaccines for human use (*2.6.9*).

SUBSTRATE FOR VIRUS PROPAGATION

The virus is propagated in chick embryo cells prepared from eggs derived from a chicken flock free from specified pathogens (*5.2.2*) or in other suitable cell cultures (*5.2.3*).

SEED LOTS

The strain of virus used is identified by historical records that include information on the origin of the strain and its subsequent manipulation. Virus seed lots are stored at or below – 60 °C.

Only a seed lot that complies with the following requirements may be used for virus propagation.

Identification. Each seed lot is identified as containing the vaccine strain of tick-borne encephalitis virus by a suitable immunochemical method (*2.7.1*), preferably using monoclonal antibodies.

Virus concentration. The virus concentration of each seed lot is determined by titration in suitable cell cultures to monitor consistency of production.

Extraneous agents (*2.6.16*). Each seed lot complies with the requirements for extraneous agents in viral vaccines for human use. For neutralisation of the vaccine virus, the use of monoclonal antibodies is preferable.

VIRUS PROPAGATION AND HARVEST

If the virus has been passaged in mouse brain during preparation of the master seed lot, not fewer than 2 passages of the master seed virus in cell culture are made before inoculation of the production cell culture.

All processing of the cell cultures is performed under aseptic conditions in an area where no other cells are being handled. Serum and trypsin used in the preparation of cell suspensions and media used must be shown to be free from extraneous agents. The cell culture media may contain a pH indicator such as phenol red and approved antibiotics at the lowest effective concentration. At least 500 mL of the cell cultures employed for vaccine production is set aside as uninfected cell cultures (control cells).

Only a single harvest that complies with the following requirements may be used in the preparation of the inactivated harvest.

Identification. The single harvest is shown to contain tick-borne encephalitis virus by a suitable immunochemical method (*2.7.1*), preferably using monoclonal antibodies, or by virus neutralisation in cell cultures.

Bacterial and fungal contamination. The single harvest complies with the test for sterility (*2.6.1*), carried out using 10 mL for each medium.

Mycoplasmas (*2.6.7*). The single harvest complies with the test for mycoplasmas carried out using 1 mL for each medium.

Control cells. The control cells comply with the tests for extraneous agents (*2.6.16*). If the vaccine is produced using a cell-bank system, the control cells comply with a test for identification.

Virus concentration. Determine the virus concentration by titration in suitable cell cultures to monitor consistency of production.

INACTIVATION

To avoid interference, viral aggregates are removed, where necessary, by filtration immediately before the inactivation process. The virus suspension is inactivated by a validated method; the method shall have been shown to be consistently capable of inactivating tick-borne encephalitis virus without destroying the antigenic and immunogenic activity; as part of the validation studies, an inactivation curve is plotted representing residual live virus concentration measured on not fewer than 3 occasions. If formaldehyde is used for inactivation, the presence of an excess of free formaldehyde is verified at the end of the inactivation process.

Only an inactivated harvest that complies with the following requirements may be used in the preparation of the final bulk vaccine.

Residual infective virus. Inoculate a quantity of the inactivated harvest equivalent to not less than 10 human doses of vaccine in the final lot into primary chicken fibroblast cell cultures, or other cells shown to be at least as sensitive to tick-borne encephalitis virus, with not less than 3 cm^2 of cell sheet per millilitre of inoculum. Incubate at 37 ± 1 °C for 14 days. No cytopathic effect is detected at the end of the incubation period. Collect the culture fluid and examine for the presence of infective tick-borne encephalitis virus by the following test in mice or by a validated *in vitro* method: inoculate 0.03 mL intracerebrally into each of not fewer than 10 mice about 4 weeks old. Observe the mice for 14 days. They show no evidence of tick-borne encephalitis virus infection.

PURIFICATION

Several inactivated single harvests may be pooled before concentration and purification by suitable methods, preferably by continuous-flow, sucrose density-gradient centrifugation.

Several purified inactivated harvests may be pooled.

Only a purified, inactivated harvest that complies with the following requirements may be used in the preparation of the final bulk vaccine.

Sterility (*2.6.1*). The purified, inactivated harvest complies with the test for sterility carried out using 10 mL for each medium.

Specific activity. Determine the antigen content of the purified, inactivated harvest by a suitable immunochemical method (*2.7.1*). Determine the total protein content by a suitable method. The specific activity, calculated as the antigen content per unit mass of protein, is within the limits approved for the specific product.

FINAL BULK VACCINE

The final bulk vaccine is prepared from one or more purified, inactivated harvests.

Only a final bulk vaccine that complies with the following requirement may be used in the preparation of the final lot.

Sterility (*2.6.1*). The final bulk vaccine complies with the test for sterility, carried out using 10 mL for each medium.

FINAL LOT

Only a final lot that is satisfactory with respect to each of the requirements given below under Identification, Tests and Assay may be released for use. Provided that the tests for free formaldehyde, bovine serum albumin (where applicable) and pyrogens and the assay have been carried out with satisfactory results on the final bulk vaccine, they may be omitted on the final lot.

IDENTIFICATION

The vaccine is shown to contain tick-borne encephalitis virus antigen by a suitable immunochemical method (*2.7.1*) using specific antibodies. The assay also serves to identify the vaccine.

TESTS

Aluminium (*2.5.13*): maximum 1.25 mg per single human dose, if aluminium hydroxide or hydrated aluminium phosphate is used as the adsorbent.

Free formaldehyde (*2.4.18*): maximum 0.1 g/L.

Bovine serum albumin: maximum 50 ng per single human dose, determined by a suitable immunochemical method (*2.7.1*), if bovine serum albumin has been used during production.

Sterility (*2.6.1*). The vaccine complies with the test for sterility.

Pyrogens (*2.6.8*). The vaccine complies with the test for pyrogens. Inject into each rabbit, per kilogram of body mass, 1 dose of vaccine.

ASSAY

The potency is determined by comparing the dose necessary to protect a given proportion of mice against the effects of a lethal dose of tick-borne encephalitis virus, administered intraperitoneally, with the quantity of a reference preparation of tick-borne encephalitis vaccine necessary to provide the same protection. For this comparison an approved reference preparation and a suitable preparation of tick-borne encephalitis virus from an approved strain for use as the challenge preparation are necessary.

The following is cited as an example of a method that has been found suitable for a given vaccine.

Selection and distribution of test animals. Use healthy mice weighing 11-17 g and derived from the same stock. Distribute the mice into not fewer than 6 groups of a suitable size to meet the requirements for validity of the test; for titration of the challenge suspension, use not fewer than 4 groups of 10 mice. Use mice of the same sex or distribute males and females equally between groups.

Determination of potency of the vaccine. Prepare not fewer than 3 suitable dilutions of the vaccine to be examined and of the reference preparation; in order to comply with validity criteria 4 or 5 dilutions will usually be necessary. Prepare dilutions such that the most concentrated suspension is expected to protect more than 50 per cent of the animals and the least concentrated suspension less than 50 per cent. Allocate each dilution to a different group of mice and inject subcutaneously into each mouse 0.2 mL of the dilution allocated to its group. 7 days later make a second injection using the same dilution scale. 14 days after the second injection prepare a suspension of the challenge virus containing not less than 100 LD_{50} in 0.2 mL. Inject 0.2 mL of this virus suspension intraperitoneally into each vaccinated mouse. To verify the challenge dose, prepare a series of not fewer than 3 dilutions of the challenge virus suspension at not greater than one-hundredfold intervals. Allocate the challenge suspension and all of the dilutions, one to each of the groups of 10 mice, and inject intraperitoneally into each mouse 0.2 mL of the challenge suspension or the dilution allocated to its group. Observe the animals for 21 days after the challenge and record the number of mice that die in the period between 7 and 21 days after the challenge. Humane endpoints may be used to avoid unnecessary suffering of animals after the virulent challenge.

Calculations. Calculate the results for an assay with quantal responses by the usual statistical methods (for example, *5.3*).

Validity criteria. The test is not valid unless:

- the concentration of the challenge virus is not less than 100 LD_{50},
- for both the vaccine to be examined and the reference preparation the 50 per cent protective dose (PD_{50}) lies between the largest and smallest doses given to the mice,
- the statistical analysis shows a significant slope and no significant deviation from linearity and parallelism of the dose-response lines,

Vaccines

– the confidence limits ($P = 0.95$) are not less than 33 per cent and not more than 300 per cent of the estimated potency.

Potency requirement. Include all valid tests to estimate the mean potency and the confidence limits ($P = 0.95$) for the mean potency; compute weighted means with the inverse of the squared standard error as weights. The vaccine complies with the test if the estimated potency is not less than that approved by the competent authority, based on data from clinical efficacy trials.

LABELLING

The label states:

– the strain of virus used in preparation,
– the type of cells used for production of the vaccine.

01/2008:1160

TYPHOID POLYSACCHARIDE VACCINE

Vaccinum febris typhoidis polysaccharidicum

DEFINITION

Typhoid polysaccharide vaccine is a preparation of purified Vi capsular polysaccharide obtained from *Salmonella typhi* Ty 2 strain or some other suitable strain that has the capacity to produce Vi polysaccharide.

Capsular Vi polysaccharide consists of partly 3-*O*-acetylated repeated units of 2-acetylamino-2-deoxy-D-galactopyranuronic acid with α-(1→4) linkages.

PRODUCTION

The production of Vi polysaccharide is based on a seed-lot system. The method of production shall have been shown to yield consistently typhoid polysaccharide vaccines of adequate immunogenicity and safety in man.

The production method is validated to demonstrate that the product, if tested, would comply with the test for abnormal toxicity for immunosera and vaccines for human use (*2.6.9*).

BACTERIAL SEED LOTS

The strain of *S. typhi* used for the master seed lot shall be identified by historical records that include information on its origin and by its biochemical and serological characteristics. Cultures from the working seed lot shall have the same characteristics as the strain that was used to prepare the master seed lot.

Only a strain that has the following characteristics may be used in the preparation of the vaccine: (a) stained smears from a culture are typical of enterobacteria; (b) the culture utilises glucose without production of gas; (c) colonies on agar are oxidase-negative; (d) a suspension of the culture agglutinates specifically with a suitable Vi antiserum or colonies form haloes on an agar plate containing a suitable Vi antiserum.

Purity of bacterial strain used for the seed lot is verified by methods of suitable sensitivity. These may include inoculation into suitable media, examination of colony morphology, microscopic examination of Gram-stained smears and culture agglutination with suitable specific antisera.

CULTURE AND HARVEST

The working seed lot is cultured on a solid medium, which may contain blood-group substances, or a liquid medium; the inoculum obtained is transferred to a liquid medium which is used to inoculate the final medium. The liquid medium used and the final medium are semi-synthetic, free from substances that are precipitated by cetrimonium bromide and do not contain blood-group substances or high-molecular-mass polysaccharides, unless it has been demonstrated that they are removed by the purification process.

The bacterial purity of the culture is verified by methods of suitable sensitivity. These may include inoculation into suitable media, examination of colony morphology, microscopic examination of Gram-stained smears and culture agglutination with suitable specific antisera.

The culture is then inactivated at the beginning of the stationary phase by the addition of formaldehyde. Bacterial cells are eliminated by centrifugation; the polysaccharide is precipitated from the culture medium by addition of hexadecyltrimethylammonium bromide (cetrimonium bromide). The precipitate is harvested and may be stored at – 20 °C before purification.

PURIFIED VI POLYSACCHARIDE

The polysaccharide is purified, after dissociation of the polysaccharide/cetrimonium bromide complex, using suitable procedures to eliminate successively nucleic acids, proteins and lipopolysaccharides. The polysaccharide is precipitated as the calcium salt in the presence of ethanol and dried at 2-8 °C; the powder obtained constitutes the purified Vi polysaccharide. The loss on drying is determined by thermogravimetry (*2.2.34*) and is used to calculate the results of the chemical tests shown below with reference to the dried substance.

Only a purified Vi polysaccharide that complies with the following requirements may be used in the preparation of the final bulk.

Protein (*2.5.16*): maximum 10 mg per gram of polysaccharide, calculated with reference to the dried substance.

Nucleic acids (*2.5.17*): maximum 20 mg per gram of polysaccharide, calculated with reference to the dried substance.

***O*-Acetyl groups** (*2.5.19*): minimum 2 mmol per gram of polysaccharide, calculated with reference to the dried substance.

Molecular size. Examine by size-exclusion chromatography (*2.2.30*) using *cross-linked agarose for chromatography R*. Use a column 0.9 m long and 16 mm in internal diameter equilibrated with a solvent having an ionic strength of 0.2 mol/kg and a pH of 7.0-7.5. Apply about 5 mg of polysaccharide in a volume of 1 mL to the column and elute at about 20 mL/h. Collect fractions of about 2.5 mL. Determine the point corresponding to $K_0 = 0.25$ and make 2 pools consisting of fractions eluted before and after this point. Determine *O*-acetyl groups on the 2 pools (*2.5.19*). Not less than 50 per cent of the polysaccharide is found in the pool containing fractions eluted before $K_0 = 0.25$.

Identification. Carry out an identification test using a suitable immunochemical method (*2.7.1*).

Bacterial endotoxins. The content of bacterial endotoxins determined by a suitable method (*2.6.14*) is within the limits approved for the specific product.

FINAL BULK VACCINE

One or more batches of purified Vi polysaccharide are dissolved in a suitable solvent, which may contain an antimicrobial preservative, so that the volume corresponding to 1 dose contains 25 µg of polysaccharide and the solution is isotonic with blood (250 mosmol/kg to 350 mosmol/kg).

Only a final bulk vaccine that complies with the following tests may be used in the preparation of the final lot.

Sterility (*2.6.1*). The final bulk vaccine complies with the test for sterility, carried out using 10 mL for each medium.

Antimicrobial preservative. Where applicable, determine the amount of antimicrobial preservative by a suitable physicochemical method. The amount is not less than 85 per cent and not greater than 115 per cent of the intended amount.

FINAL LOT

The final bulk vaccine is distributed aseptically into sterile tamper-proof containers that are then closed so as to prevent contamination.

Only a final lot that is satisfactory with respect to each of the requirements prescribed below under Identification, Tests and Assay and with the requirement for bacterial endotoxins may be released for use. Provided the tests for free formaldehyde and antimicrobial preservative have been carried out on the final bulk vaccine, they may be omitted on the final lot.

Bacterial endotoxins. The content of bacterial endotoxins determined by a suitable method (*2.6.14*) is within the limit approved for the specific product.

CHARACTERS

Clear colourless liquid, free from visible particles.

IDENTIFICATION

Carry out an identification test using a suitable immunochemical method (*2.7.1*).

TESTS

pH (*2.2.3*): 6.5 to 7.5.

***O*-Acetyl groups**: 0.085 (± 25 per cent) µmol per dose (25 µg of polysaccharide).

Test solution. Place 3 mL of the vaccine in each of 3 tubes (2 reaction solutions and 1 correction solution).

Reference solutions. Dissolve 0.150 g of *acetylcholine chloride R* in 10 mL of *water R* (stock solution containing 15 g/L of acetylcholine chloride). Immediately before use, dilute 0.5 mL of the stock solution to 50 mL with *water R* (working dilution containing 150 µg/mL of acetylcholine chloride). In 10 tubes, place in duplicate (reaction and correction solutions) 0.1 mL, 0.2 mL, 0.5 mL, 1.0 mL and 1.5 mL of the working dilution.

Prepare a blank using 3 mL of *water R*.

Make up the volume in each tube to 3 mL with *water R*. Add 0.5 mL of a mixture of 1 volume of *water R* and 2 volumes of *dilute hydrochloric acid R* to each of the correction tubes and to the blank. Add 1.0 mL of *alkaline hydroxylamine solution R* to each tube. Allow the reaction to proceed for exactly 2 min and add 0.5 mL of a mixture of 1 volume of *water R* and 2 volumes of *dilute hydrochloric acid R* to each of the reaction tubes. Add 0.5 mL of a 200 g/L solution of *ferric chloride R* in *0.2 M hydrochloric acid* to each tube, stopper the tubes and shake vigorously to remove bubbles.

Measure the absorbance (*2.2.25*) of each solution at 540 nm using the blank as the compensation liquid. For each reaction solution, subtract the absorbance of the corresponding correction solution. Draw a calibration curve from the corrected absorbances for the 5 reference solutions and the corresponding content of acetylcholine chloride and read from the curve the content of acetylcholine chloride in the test solution for each volume tested. Calculate the mean of the 2 values.

1 mole of acetylcholine chloride (181.7 g) is equivalent to 1 mole of *O*-acetyl (43.05 g).

Free formaldehyde (*2.4.18*): maximum 0.2 g/L.

Antimicrobial preservative. Where applicable, determine the amount of antimicrobial preservative by a suitable physicochemical method. The content is not less than the minimum amount shown to be effective and not more than 115 per cent of the content stated on the label. If phenol has been used in the preparation, the content is not more than 2.5 g/L (*2.5.15*).

Sterility (*2.6.1*). The vaccine complies with the test for sterility.

ASSAY

Determine Vi polysaccharide by a suitable immunochemical method (*2.7.1*), using a reference purified polysaccharide. The estimated amount of polysaccharide per dose is 80 per cent to 120 per cent of the content stated on the label. The confidence limits ($P = 0.95$) of the estimated amount of polysaccharide are not less than 80 per cent and not more than 120 per cent.

LABELLING

The label states:

- the number of micrograms of polysaccharide per human dose (25 µg),
- the total quantity of polysaccharide in the container.

01/2008:0156

TYPHOID VACCINE

Vaccinum febris typhoidis

DEFINITION

Typhoid vaccine is a sterile suspension of inactivated *Salmonella typhi* containing not less than 5×10^8 and not more than 1×10^9 bacteria (*S. typhi*) per human dose. The human dose does not exceed 1.0 mL.

PRODUCTION

The vaccine is prepared using a seed-lot system from a suitable strain, such as Ty 2[(7)], of *S. typhi*. The final vaccine represents not more than 3 subcultures from the strain on which were made the laboratory and clinical tests that showed it to be suitable. The bacteria are inactivated by acetone, by formaldehyde, by phenol or by heating or by a combination of the last 2 methods.

The production method is validated to demonstrate that the product, if tested, would comply with the test for abnormal toxicity for immunosera and vaccines for human use (*2.6.9*) modified as follows: inject 0.5 mL of the vaccine into each mouse and 1.0 mL into each guinea pig.

IDENTIFICATION

It is identified by specific agglutination.

TESTS

Phenol (*2.5.15*). If phenol has been used in the preparation, the concentration is not more than 5 g/L.

Antigenic power. When injected into susceptible laboratory animals, it elicits anti-O, anti-H and, to a lesser extent, anti-Vi agglutinins.

Sterility (*2.6.1*). It complies with the test for sterility.

LABELLING

The label states:

- the method used to inactivate the bacteria,
- the number of bacteria per human dose.

01/2008:0157

TYPHOID VACCINE, FREEZE-DRIED

Vaccinum febris typhoidis cryodesiccatum

DEFINITION

Freeze-dried typhoid vaccine is a freeze-dried preparation of inactivated *Salmonella typhi*. The vaccine is reconstituted as stated on the label to give a uniform suspension containing not less than 5×10^8 and not more than 1×10^9 bacteria (*S. typhi*) per human dose. The human dose does not exceed 1.0 mL of the reconstituted vaccine.

(7) This strain is issued by the World Health Organization Collaborating Centre for Reference and Research on Bacterial Vaccines, Human Serum and Vaccine Institute, Szallas Utea 5, H-1107, Budapest, Hungary.

Vaccines

PRODUCTION

The vaccine is prepared using a seed-lot system from a suitable strain, such as Ty 2[8], of *S. typhi*. The final vaccine represents not more than 3 subcultures from the strain on which were made the laboratory and clinical tests that showed it to be suitable. The bacteria are inactivated either by acetone or by formaldehyde or by heat. Phenol is not used in the preparation. The vaccine is distributed into sterile containers and freeze-dried to a moisture content favourable to the stability of the vaccine. The containers are then closed so as to exclude contamination.

The production method is validated to demonstrate that the product, if tested, would comply with the test for abnormal toxicity for immunosera and vaccines for human use (*2.6.9*) modified as follows: inject 0.5 mL of the vaccine into each mouse and 1.0 mL into each guinea pig.

IDENTIFICATION

The vaccine reconstituted as stated on the label is identified by specific agglutination.

TESTS

Phenol (*2.5.15*). If phenol has been used in the preparation, the concentration is not more than 5 g/L.

Antigenic power. When injected into susceptible laboratory animals, the reconstituted vaccine elicits anti-O, anti-H and, to a lesser extent, anti-Vi agglutinins.

Sterility (*2.6.1*). The reconstituted vaccine complies with the test for sterility.

LABELLING

The label states:

- the method used to inactivate the bacteria,
- the number of bacteria per human dose,
- that the vaccine should be used within 8 h of reconstitution.

04/2009:1055

TYPHOID VACCINE (LIVE, ORAL, STRAIN Ty 21a)

Vaccinum febris typhoidis vivum perorale (stirpis Ty 21a)

DEFINITION

Typhoid vaccine (live, oral, strain Ty 21a) is a freeze-dried preparation of live *Salmonella typhi* strain Ty 21a grown in a suitable medium. When presented in capsules, the vaccine complies with the monograph on *Capsules (0016)*.

PRODUCTION

CHOICE OF VACCINE STRAIN

The main characteristic of the strain is the defect of the enzyme uridine diphosphate-galactose-4-epimerase. The activities of galactopermease, galactokinase and galactose-1-phosphate uridyl-transferase are reduced by 50 per cent to 90 per cent. Whatever the growth conditions, the strain does not contain Vi antigen. The strain agglutinates to anti-O:9 antiserum only if grown in medium containing galactose. It contains the flagellar H:d antigen and does not produce hydrogen sulfide on Kligler iron agar. The strain is nonvirulent for mice. Cells of strain Ty 21a lyse if grown in the presence of 1 per cent of galactose.

BACTERIAL SEED LOTS

The vaccine is prepared using a seed-lot system. The working seed lots represent not more than one subculture from the master seed lot. The final vaccine represents not more than four subcultures from the original vaccine on which were made the laboratory and clinical tests showing the strain to be suitable.

Only a master seed lot that complies with the following requirements may be used in the preparation of working seed lots.

Galactose metabolism. In a spectrophotometric assay, no activity of the enzyme uridine diphosphate-galactose-4-epimerase is found in the cytoplasm of strain Ty 21a compared to strain Ty 2.

Biosynthesis of lipopolysaccharide. Lipopolysaccharides are extracted by the hot-phenol method and examined by size-exclusion chromatography. Strain Ty 21a grown in medium free of galactose shows only the rough (R) type of lipopolysaccharide.

Serological characteristics. Strain Ty 21a grown in a synthetic medium without galactose does not agglutinate to specific anti-O:9 antiserum. Whatever the growth conditions, strain Ty 21a does not agglutinate to Vi antiserum. Strain Ty 21a agglutinates to H:d flagellar antiserum.

Biochemical markers. Strain Ty 21a does not produce hydrogen sulfide on Kligler iron agar. This property serves to distinguish Ty 21a from other galactose-epimerase-negative *S. typhi* strains.

Cell growth. Strain Ty 21a cells lyse when grown in the presence of 1 per cent of galactose.

BACTERIAL PROPAGATION AND HARVEST

The bacteria from the working seed lot are multiplied in a preculture, subcultured once and are then grown in a suitable medium containing 0.001 per cent of galactose at 30 °C for 13 h to 15 h. The bacteria are harvested. The harvest must be free from contaminating micro-organisms.

Only a single harvest that complies with the following requirements may be used for the preparation of the freeze-dried harvest.

pH. The pH of the culture is 6.8 to 7.5.

Optical density. The optical density of the culture, measured at 546 nm, is 6.5 to 11.0. Before carrying out the measurement, dilute the culture so that a reading in the range 0.1 to 0.5 is obtained and correct the reading to take account of the dilution.

Identification. Culture bacteria on an agar medium containing 1 per cent of galactose and bromothymol blue. Light blue, concave colonies, transparent due to lysis of cells, are formed. No yellow colonies (galactose-fermenting) are found.

FREEZE-DRIED HARVEST

The harvest is mixed with a suitable stabiliser and freeze-dried by a process that ensures the survival of at least 10 per cent of the bacteria and to a water content shown to be favourable to the stability of the vaccine. No antimicrobial preservative is added to the vaccine.

Only a freeze-dried harvest that complies with the following tests may be used for the preparation of the final bulk.

Identification. Culture bacteria are examined on an agar medium containing 1 per cent of galactose and bromothymol blue. Light blue, concave colonies, transparent due to lysis of cells, are formed. No yellow colonies (galactose-fermenting) are found.

Number of live bacteria. Not fewer than 1×10^{11} live *S. typhi* strain Ty 21a per gram.

Water (*2.5.12*): 1.5 per cent to 4.0 per cent, determined by the semi-micro determination of water.

(8) This strain is issued by the World Health Organization Collaborating Centre for Reference and Research on Bacterial Vaccines, Human Serum and Vaccine Institute, Szallas Utea 5, H-1107, Budapest, Hungary.

FINAL BULK VACCINE

The final bulk vaccine is prepared by mixing under suitable conditions one or more freeze-dried harvests with suitable excipients.

Only a final bulk that complies with the following requirement may be used in the preparation of the final lot.

Number of live bacteria. Not fewer than 40×10^9 live *S. typhi* strain Ty 21a per gram.

FINAL LOT

The final bulk vaccine is distributed under suitable conditions into capsules with a gastro-resistant shell or into suitable containers.

Only a final lot that is satisfactory with respect to each of the requirements given below under Identification, Tests and Number of live bacteria may be released for use, except that in the determination of the number of live bacteria each dosage unit must contain not fewer than 4×10^9 live bacteria.

IDENTIFICATION

Culture bacteria from the vaccine to be examined on an agar medium containing 1 per cent of galactose and bromothymol blue. Light blue, concave colonies, transparent due to lysis of cells, are formed. No yellow colonies (galactose-fermenting) are found.

TESTS

Contaminating micro-organisms (*2.6.12*, *2.6.13*). Carry out the test using suitable selective media. Determine the total viable count using the plate-count method. The number of contaminating micro-organisms per dosage unit is not greater than 10^2 bacteria and 20 fungi. No pathogenic bacterium, particularly *Escherichia coli, Staphylococcus aureus, Pseudomonas aeruginosa,* and no salmonella other than strain Ty 21a are found.

Water (*2.5.12*): 1.5 per cent to 4.0 per cent, determined on the contents of the capsule or of the container by the semi-micro determination of water.

NUMBER OF LIVE BACTERIA

Carry out the test using not fewer than five dosage units. Homogenise the contents of the dosage units in a 9 g/L solution of *sodium chloride R* at 4 °C using a mixer in a cold room with sufficient glass beads to emerge from the liquid. Immediately after homogenisation prepare a suitable dilution of the suspension using cooled diluent and inoculate brain heart infusion agar; incubate at 36 ± 1 °C for 20 h to 36 h. The vaccine contains not fewer than 2×10^9 live *S. typhi* Ty 21a bacteria per dosage unit.

LABELLING

The label states:

- the minimum number of live bacteria per dosage unit,
- that the vaccine is for oral use only.

01/2011:0648

VARICELLA VACCINE (LIVE)

Vaccinum varicellae vivum

DEFINITION

Varicella vaccine (live) is a freeze-dried preparation of a suitable attenuated strain of human herpesvirus 3. The vaccine is reconstituted immediately before use, as stated on the label, to give a clear liquid that may be coloured owing to the presence of a pH indicator.

PRODUCTION

The production of vaccine is based on a virus seed-lot system and a cell-bank system. The production method shall have been shown to yield consistently live varicella vaccines of adequate immunogenicity and safety in man. The virus in the final vaccine shall not have been passaged in cell cultures beyond a defined number of passages approved by the competent authority from the original isolated virus.

The potential neurovirulence of the vaccine strain is considered during preclinical development, based on available epidemiological data on neurovirulence and neurotropism, primarily for the wild-type virus. In light of this, a risk analysis is carried out. Where necessary and if available, a test is carried out on the vaccine strain using an animal model that differentiates wild-type and attenuated virus; tests on strains of intermediate attenuation may also be needed.

The production method is validated to demonstrate that the product, if tested, would comply with the test for abnormal toxicity for immunosera and vaccines for human use (*2.6.9*).

SUBSTRATE FOR VIRUS PROPAGATION

The virus is propagated in human diploid cells (*5.2.3*).

VIRUS SEED LOT

The strain of human herpesvirus 3 used shall be identified as being suitable by historical records that include information on the origin of the strain and its subsequent manipulation. The virus shall at no time have been passaged in continuous cell lines. Seed lots are prepared in the same kind of cells as those used for the production of the final vaccine. Virus seed lots are prepared in large quantities and stored at temperatures below − 20 °C if freeze-dried, or below − 60 °C if not freeze-dried.

Only a virus seed lot that complies with the following requirements may be used for virus propagation.

Identification. The master and working seed lots are identified as human herpesvirus 3 by serum neutralisation in cell culture, using specific antibodies.

Virus concentration. The virus concentration of the master and working seed lots is determined as prescribed under Assay to monitor consistency of production.

Extraneous agents (*2.6.16*). The working seed lot complies with the requirements for seed lots for live virus vaccines; a sample of 50 mL is taken for the test in cell cultures.

VIRUS PROPAGATION AND HARVEST

All processing of the cell bank and subsequent cell cultures is done under aseptic conditions in an area where no other cells or viruses are being handled. Approved animal (but not human) serum may be used in the culture media. Serum and trypsin used in the preparation of cell suspensions and media are shown to be free from extraneous agents. The cell culture medium may contain a pH indicator such as phenol red and approved antibiotics at the lowest effective concentration. It is preferable to have a substrate free from antibiotics during production. 5 per cent, but not less than 50 mL, of the cell cultures employed for vaccine production is set aside as uninfected cell cultures (control cells). The infected cells constituting a single harvest are washed, released from the support surface and pooled. The cell suspension is disrupted by sonication.

Only a virus harvest that complies with the following requirements may be used in the preparation of the final bulk vaccine.

Identification. The virus harvest contains virus that is identified as human herpesvirus 3 by serum neutralisation in cell culture, using specific antibodies.

Virus concentration. The concentration of infective virus in virus harvests is determined as prescribed under Assay to monitor consistency of production and to determine the dilution to be used for the final bulk vaccine.

Extraneous agents (*2.6.16*). Use 50 mL for the test in cell cultures.

Control cells. The control cells of the production cell culture from which the single harvest is derived comply with a test for identity and with the requirements for extraneous agents (*2.6.16*).

FINAL BULK VACCINE

Virus harvests that comply with the above tests are pooled and clarified to remove cells. A suitable stabiliser may be added and the pooled harvests diluted as appropriate.

Only a final bulk vaccine that complies with the following requirements may be used in the preparation of the final lot.

Bacterial and fungal contamination. Carry out the test for sterility (*2.6.1*) using 10 mL for each medium.

FINAL LOT

The final bulk vaccine is distributed aseptically into sterile, tamper-proof containers and freeze-dried to a moisture content shown to be favourable to the stability of the vaccine. The containers are then closed so as to prevent contamination and the introduction of moisture.

Only a final lot that is satisfactory with respect to the test for water and each of the requirements given below under Identification, Tests and Assay may be released for use. Provided that the test for bovine serum albumin has been carried out with satisfactory results on the final bulk vaccine, it may be omitted on the final lot.

Water (*2.5.12*). Not more than the amount shown to ensure stability of the vaccines as approved by the competent authority, determined by the semi-micro determination of water.

IDENTIFICATION

When the vaccine reconstituted as stated on the label is mixed with specific human herpesvirus 3 antibodies, it is no longer able to infect susceptible cell cultures.

TESTS

Bacterial and fungal contamination. The reconstituted vaccine complies with the test for sterility (*2.6.1*).

Bovine serum albumin: maximum 0.5 µg per human dose, determined by a suitable immunochemical method (*2.7.1*).

ASSAY

Titrate the vaccine for infective virus, using at least 3 separate vials of vaccine. Titrate 1 vial of an appropriate virus reference preparation in triplicate to validate each assay. The virus concentration of the reference preparation is monitored using a control chart and a titre is established on a historical basis by each laboratory. The relation with the appropriate European Pharmacopoeia Biological Reference Preparation is established and monitored at regular intervals if a manufacturer's reference preparation is used. Calculate the individual virus concentration for each vial of vaccine and for each replicate of the reference preparation as well as the corresponding combined virus concentrations, using the usual statistical methods (for example, *5.3*). The combined estimate of the virus concentration for the 3 vials of vaccine is not less than that stated on the label.

The assay is not valid if:

- the confidence interval (P = 0.95) of the estimated virus concentration of the reference preparation for the 3 replicates combined is greater than ± 0.3 $\log_{10}$ PFU;
- the virus concentration of the reference preparation differs by more than 0.5 $\log_{10}$ PFU from the established value.

The assay is repeated if the confidence interval (P = 0.95) of the combined virus concentration of the vaccine is greater than ± 0.3 $\log_{10}$ PFU; data obtained from valid assays only are combined by the usual statistical methods (for example, *5.3*) to calculate the virus concentration of the sample. The confidence interval (P = 0.95) of the combined virus concentration is not greater than ± 0.3 $\log_{10}$ PFU.

Varicella vaccine (live) BRP is suitable for use as a reference preparation.

Where justified and authorised, different assay designs may be used; this may imply the application of different validity and acceptance criteria. However, the vaccine must comply if tested as described above.

LABELLING

The label states:

- the strain of virus used for the preparation of the vaccine;
- the type and origin of the cells used for the preparation of the vaccine;
- the minimum virus concentration;
- that contact between the vaccine and disinfectants is to be avoided.

01/2013:0537

YELLOW FEVER VACCINE (LIVE)

Vaccinum febris flavae vivum

DEFINITION

Yellow fever vaccine (live) is a freeze-dried preparation of yellow fever virus derived from the 17D strain and grown in fertilised hen eggs. The vaccine is reconstituted immediately before use, as stated on the label, to give a clear liquid.

PRODUCTION

The production of vaccine is based on a virus seed-lot system. The production method shall have been shown to yield consistently yellow fever vaccine (live) of acceptable immunogenicity and safety for man.

The production method is validated to demonstrate that the product, if tested, would comply with the test for abnormal toxicity for immunosera and vaccines for human use (*2.6.9*) modified as follows for the test in guinea-pigs: inject 10 human doses into each guinea-pig at 2 different injection sites and observe for 21 days.

Reference preparation. In the test for neurotropism, a suitable batch of vaccine known to have satisfactory properties in man is used as the reference preparation.

A reference preparation calibrated in International Units per ampoule is used to verify the titre of the virus inoculum in the tests for viraemia (viscerotropism) and immunogenicity, and to titrate the vaccine batch in the potency assay.

The International Unit is the activity contained in a stated quantity of the International Standard. The equivalence in International Units of the International Standard is stated by the World Health Organization.

SUBSTRATE FOR VIRUS PROPAGATION

Virus for the preparation of master and working seed lots and of all vaccine batches is grown in the tissues of chick embryos from a flock free from specified pathogens (SPF) (*5.2.2*).

SEED LOTS

The 17D strain shall be identified by historical records that include information on the origin of the strain and its subsequent manipulation. Virus seed lots are prepared in large quantities and stored at a temperature below − 60 °C. Master and working seed lots shall not contain any human protein, added serum or antibiotics.

Unless otherwise justified and authorised, the virus in the final vaccine shall be between passage levels 204 and 239 from the original isolate of strain 17D. A working seed lot shall be only 1 passage from a master seed lot. A working seed lot shall be used without intervening passage as the inoculum for infecting the tissues used in the production of a vaccine lot, so that no vaccine virus is more than 1 passage from a seed lot that has passed all the safety tests.

Only a virus seed lot that complies with the following requirements may be used for virus propagation.

Identification. The master and working seed lots are identified as containing yellow fever virus by serum neutralisation in cell culture using specific antibodies, or by molecular methods (e.g. nucleic acid amplification techniques (NAT), sequencing).

Extraneous agents (*2.6.16*). Each master seed lot complies with the following tests:

- bacterial and fungal sterility (as described in chapter *2.6.16* under Virus seed lot and virus harvests);
- mycoplasmas (as described in chapter *2.6.16* under Virus seed lot and virus harvests);
- mycobacteria (as described in chapter *2.6.16* under Virus seed lot and virus harvests).

Avian leucosis viruses (*2.6.24*). Each master seed lot complies with the test for avian leucosis viruses.

Extraneous agents (*2.6.16*). Each working seed lot complies with the following tests:

- test in adult mice (intraperitoneal inoculation only) (as described in chapter *2.6.16* under Virus seed lot);
- test in guinea-pigs (as described in chapter *2.6.16* under Virus seed lot);
- bacterial and fungal sterility (as described in chapter *2.6.16* under Virus seed lot and virus harvests);
- mycoplasmas (as described in chapter *2.6.16* under Virus seed lot and virus harvests);
- mycobacteria (as described in chapter *2.6.16* under Virus seed lot and virus harvests);
- test in cell culture for other extraneous agents: a neutralised sample of 5 mL of working seed lot, representing at least 500 000 (5.7 $\log_{10}$) IU, is tested for the presence of extraneous agents by inoculation into continuous simian kidney and human cell cultures as well as into primary chick-embryo-fibroblast cells; the cells are incubated at 36 ± 1 °C and observed for a period of 14 days; the working seed lot passes the test if there is no evidence of the presence of any extraneous agents; the test is not valid unless at least 80 per cent of the cell cultures remain viable;
- avian viruses: a neutralised sample of 1 mL of working seed lot, representing at least 100 000 (5.0 $\log_{10}$) IU, is tested for the presence of avian viruses by inoculation by the allantoic route into a group of at least 20 fertilised, 9- to 11-day-old, SPF eggs (*5.2.2*), and by inoculation into the yolk sac of a group of at least 20 fertilised, 5- to 7-day-old, SPF eggs (*5.2.2*); incubate for 7 days; the working seed lot complies if the allantoic and yolk sac fluids show no signs of haemagglutinating agents and if the embryos and chorio-allantoic membranes examined to detect any macroscopic pathology are typical; the test is not valid unless at least 80 per cent of the inoculated eggs survive during the 7-day observation period.

Avian leucosis viruses (*2.6.24*). Each working seed lot complies with the test for avian leucosis viruses.

Tests in monkeys. Each master and working seed lot complies with the following tests in monkeys for viraemia (viscerotropism), immunogenicity and neurotropism.

The monkeys shall be *Macaca* sp. susceptible to yellow fever virus and shall have been shown to be non-immune to yellow fever at the time of injecting the seed virus. They shall be healthy and shall not have received previously intracerebral or intraspinal inoculation. Furthermore, they shall not have been inoculated by other routes with neurotropic viruses or with antigens related to yellow fever virus. Not fewer than 10 monkeys are used for each test.

Use a test dose of 0.25 mL containing the equivalent of not less than 5000 (3.7 $\log_{10}$) IU and not more than 50 000 (4.7 $\log_{10}$) IU, determined by an *in vitro* titration for infectious virus in cell culture. Inject the test dose into 1 frontal lobe of each monkey under anaesthesia and observe the monkeys for not less than 30 days.

Viraemia (Viscerotropism). Viscerotropism is indicated by the amount of virus present in serum. Take blood from each of the test monkeys on the 2nd, 4th and 6th days after inoculation and prepare serum from each sample. Prepare 1:10, 1:100 and 1:1000 dilutions from each serum and inoculate each dilution into a group of at least 4 cell culture vessels used for the determination of the virus concentration. The seed lot complies with the test if none of the sera contains more than the equivalent of 500 (2.7 $\log_{10}$) IU in 0.03 mL and at most 1 serum contains more than the equivalent of 100 (2.0 $\log_{10}$) IU in 0.03 mL.

Immunogenicity. Take blood from each monkey 30 days after the injection of the test dose and prepare serum from each sample. The seed lot complies with the test if at least 90 per cent of the test monkeys are shown to be immune, as determined by examining their sera in the test for neutralisation of yellow fever virus described below.

It has been shown that a low dilution of serum (for example, 1:10) may contain non-specific inhibitors that influence this test; such serum shall be treated to remove inhibitors. Mix dilutions of at least 1:10, 1:40 and 1:160 of serum from each monkey with an equal volume of 17D vaccine virus at a dilution that will yield an optimum number of plaques with the titration method used. Incubate the serum-virus mixtures in a water-bath at 37 °C for 1 h and then cool in iced water; add 0.2 mL of each serum-virus mixture to each of 4 cell-culture plates and proceed as for the determination of virus concentration. Inoculate similarly 10 plates with the same amount of virus, plus an equal volume of a 1:10 dilution of monkey serum known to contain no neutralising antibodies to yellow fever virus. At the end of the observation period, compare the mean number of plaques in the plates receiving virus plus non-immune serum with the mean number of plaques in the plates receiving virus plus dilutions of each monkey serum. Not more than 10 per cent of the test monkeys have serum that fails to reduce the number of plaques by 50 per cent at the 1:10 dilution.

Neurotropism. Neurotropism is assessed from clinical evidence of encephalitis, from incidence of clinical manifestations and by evaluation of histological lesions, in comparison with 10 monkeys injected with the reference preparation. The seed lot is not acceptable if either the onset and duration of the febrile reaction or the clinical signs of encephalitis and pathological findings are such as to indicate a change in the properties of the virus.

Clinical evaluation

The monkeys are examined daily for 30 days by personnel familiar with clinical signs of encephalitis in primates (if necessary, the monkeys are removed from their cage and examined for signs of motor weakness or spasticity). The seed lot is not acceptable if in the monkeys injected with it the incidence of severe signs of encephalitis, such as paralysis or inability to stand when stimulated, or mortality is greater than for the reference vaccine. These and other signs of encephalitis, such as paresis, incoordination, lethargy, tremors or spasticity are assigned numerical values for the severity of symptoms by a grading method. Each day each monkey in the test is given a score based on the following scale:

- grade 1: rough coat, not eating;
- grade 2: high-pitched voice, inactive, slow moving;

Vaccines

- grade 3: shaky movements, tremors, incoordination, limb weakness;
- grade 4: inability to stand, limb paralysis or death (a dead monkey receives a daily score of 4 from the day of death until day 30).

A clinical score for a particular monkey is the average of its daily scores; the clinical score for the group is the arithmetic mean of the individual monkey scores. The seed lot is not acceptable if the mean of the clinical severity scores for the group of monkeys inoculated with it is significantly greater ($P = 0.95$) than the mean for the group of monkeys injected with the reference preparation. In addition, special consideration is given to any animal showing unusually severe signs when deciding on the acceptability of the seed lot.

Histological evaluation

5 levels of the brain are examined including:

- block I: the corpus striatum at the level of the optic chiasma;
- block II: the thalamus at the level of the mamillary bodies;
- block III: the mesencephalon at the level of the superior colliculi;
- block IV: the pons and cerebellum at the level of the superior olives;
- block V: the medulla oblongata and cerebellum at the level of the mid-inferior olivary nuclei.

Cervical and lumbar enlargements of the spinal cord are each divided equally into 6 blocks; 15 µm sections are cut from the tissue blocks embedded in paraffin wax and stained with gallocyanin. Numerical scores are given to each hemisection of the cord and to structures in each hemisection of the brain as listed below. Lesions are scored as follows:

- grade 1 - minimal: 1 to 3 small focal inflammatory infiltrates; degeneration or loss of a few neurons;
- grade 2 - moderate: 4 or more focal inflammatory infiltrates; degeneration or loss of neurons affecting not more than one third of cells;
- grade 3 - severe: moderate focal or diffuse inflammatory infiltration; degeneration or loss of 33-90 per cent of the neurons;
- grade 4 - overwhelming: variable but often severe inflammatory reaction; degeneration or loss of more than 90 per cent of neurons.

It has been found that inoculation of yellow fever vaccine into the monkey brain causes histological lesions in different anatomical formations of the central nervous system with varying frequency and severity (I. S. Levenbook *et al.*, *Journal of Biological Standardization*, 1987, 15, 305-313). Based on these 2 indicators, the anatomical structures can be divided into target, spared and discriminator areas. Target areas are those that show more severe specific lesions in a majority of monkeys irrespective of the degree of neurovirulence of the seed lot. Spared areas are those that show only minimal specific lesions and in a minority of monkeys. Discriminator areas are those where there is a significant increase in the frequency of more severe specific lesions with seed lots having a higher degree of neurovirulence. Discriminator and target areas for *Macaca cynomolgus* and *Macaca rhesus* monkeys are shown in the table below.

Type of monkey	Discriminator areas	Target areas
Macaca cynomolgus	Globus pallidus	Substantia nigra
	Putamen	
	Anterior/median thalamic nucleus	
	Lateral thalamic nucleus	
Macaca rhesus	Caudate nucleus	Substantia nigra
	Globus pallidus	Cervical enlargement
	Putamen	Lumbar enlargement
	Anterior/median thalamic nucleus	
	Lateral thalamic nucleus	
	Cervical enlargement	
	Lumbar enlargement	

Scores for discriminator and target areas are used for the final evaluation of the seed lot. The individual monkey score is calculated from the sum of individual target area scores in each hemisection divided by the number of areas examined. A separate score is calculated similarly for the discriminator areas.

Mean scores for the test group are calculated in 2 ways: (1) by dividing the sum of the individual monkey discriminator scores by the number of monkeys; and (2) by dividing the sum of the individual monkey target and discriminator scores by the number of monkeys. These 2 mean scores are taken into account when deciding on the acceptability of the seed lot. The seed lot is not acceptable if either of the mean lesion scores is significantly greater ($P = 0.95$) than for the reference preparation.

PROPAGATION AND HARVEST

All processing of the fertilised eggs is done under aseptic conditions in an area where no other infectious agents or cells are handled at the same time. At least 2 per cent but not fewer than 20 and not more than 80 eggs are maintained as uninfected control eggs. After inoculation and incubation at a controlled temperature, only living and typical chick embryos are harvested. At the time of harvest, the control eggs are treated in the same way as the inoculated eggs to obtain a control embryonic pulp. The age of the embryo at the time of virus harvest is reckoned from the initial introduction of the egg into the incubator and shall be not more than 12 days. After homogenisation and clarification by centrifugation, the extract of embryonic pulp is tested as described below and kept at − 70 °C or colder until further processing. Virus harvests may be pooled. No human protein is added to the virus suspension at any stage during production. If stabilisers are added, they shall have been shown to have no antigenic or sensitising properties for man.

Only a single harvest or, where applicable, a pool of single harvests that complies with the following requirements may be used in the preparation of the final bulk vaccine.

Identification. The single harvest or pool of single harvests contains virus that is identified as yellow fever virus by serum neutralisation in cell culture using specific antibodies, or by molecular methods (e.g. NAT, sequencing).

Bacterial and fungal contamination. The single harvest complies with the test for sterility (*2.6.1*), carried out using 10 mL for each medium.

Mycoplasmas (*2.6.7*). The single harvest or pool of single harvests complies with the test for mycoplasmas, carried out using 10 mL.

Mycobacteria (*2.6.2*). A 5 mL sample of the single harvest or pool of single harvests is tested for the presence of *Mycobacterium* spp. by culture methods known to be sensitive for the detection of these organisms.

Embryonic pulp of control eggs. The extract of the control eggs shows no evidence of the presence of any extraneous agents in the tests described below.

Test in cell culture for other extraneous agents. Inoculate a 5 mL sample of embryonic pulp of the control eggs into continuous simian kidney and human cell cultures as well as into primary chick-embryo-fibroblast cells. The cells are incubated at 36 ± 1 °C and observed for a period of 14 days. The embryonic pulp of the control eggs passes the test if there is no evidence of the presence of any extraneous agents. The test is not valid unless at least 80 per cent of the cell cultures remain viable.

Avian viruses. Using 0.1 mL per egg, inoculate the embryonic pulp of control eggs: by the allantoic route into a group of 10 fertilised, 9- to 11-day-old, SPF eggs (*5.2.2*); and into the yolk sac of a group of 10 fertilised, 5- to 7-day-old, SPF eggs (*5.2.2*). Incubate for 7 days. The embryonic pulp lot of the control eggs complies if the allantoic and yolk sac fluids show no signs of haemagglutinating agents and if the embryos and chorio-allantoic membranes examined to detect any macroscopic pathology are typical. The test is not valid unless at least 80 per cent of the inoculated eggs survive during the 7 day observation period.

Virus concentration. In order to calculate the dilution for formulation of the final bulk, each single harvest is titrated as described under Assay.

FINAL BULK VACCINE

Single harvests or pools of single harvests that comply with the tests prescribed above are pooled and clarified again. A test for protein nitrogen content is carried out. A suitable stabiliser may be added and the pooled harvests diluted as appropriate.

Only a final bulk vaccine that complies with the following requirements may be used in the preparation of the final lot.

Bacterial and fungal contamination. The final bulk vaccine complies with the test for sterility (*2.6.1*), carried out using 10 mL for each medium.

Protein nitrogen content: maximum 0.25 mg per human dose before the addition of any stabiliser.

FINAL LOT

The final bulk vaccine is distributed aseptically into sterile, tamper-proof containers and freeze-dried to a moisture content shown to be favourable to the stability of the vaccine. The containers are then closed so as to prevent contamination and the introduction of moisture.

Only a final lot that is satisfactory with respect to thermal stability and each of the requirements given below under Identification, Tests and Assay may be released for use. Provided that the test for ovalbumin has been performed with satisfactory results on the final bulk vaccine, it may be omitted on the final lot.

Thermal stability. Maintain at least 3 containers of the final lot of freeze-dried vaccine in the dry state at 37 ± 1 °C for 14 days. Determine the virus concentration as described under Assay in parallel for the heated vaccine and for vaccine stored at the temperature recommended for storage. The virus concentration of the heated vaccine is not more than 1.0 $\log_{10}$ lower than that of the unheated vaccine.

IDENTIFICATION

When the vaccine reconstituted as stated on the label is mixed with specific yellow fever virus antibodies, there is a significant reduction in its ability to infect susceptible cell cultures. Alternatively, the vaccine reconstituted as stated on the label contains virus that is identified as yellow fever virus by molecular methods (e.g. NAT, sequencing).

TESTS

Ovalbumin: maximum 5 µg of ovalbumin per human dose, determined by a suitable immunochemical method (*2.7.1*).

Water (*2.5.12*): maximum 3.0 per cent.

Bacterial and fungal contamination. The reconstituted vaccine complies with the test for sterility (*2.6.1*).

Bacterial endotoxins (*2.6.14*): less than 5 IU per single human dose.

ASSAY

Titrate for infective virus in cell cultures using at least 3 separate containers of vaccine. Titrate 1 container of an appropriate virus reference preparation in triplicate to validate each assay. The virus concentration of the reference preparation is monitored using a control chart and a titre is established on a historical basis by each laboratory. Calculate the individual virus concentration for each container of vaccine and for each replicate of the reference preparation as well as the corresponding combined virus concentrations using the usual statistical methods (for example, *5.3*). The combined virus concentration for the 3 containers of vaccine is compared to the results of the reference preparation titrated in parallel, to obtain results in International Units. The combined virus concentration of the vaccine is not less than 3.0 $\log_{10}$ IU per human dose and not more than the upper limit approved for the particular product by the competent authority.

The assay is not valid if:

- the confidence interval (P = 0.95) of the estimated virus concentration of the reference preparation for the 3 replicates combined is greater than ± 0.3 $\log_{10}$ IU;
- the virus concentration of the reference preparation differs by more than 0.5 $\log_{10}$ IU from the established value.

The assay is repeated if the confidence interval (P = 0.95) of the combined virus concentration of the vaccine is greater than ± 0.3 $\log_{10}$ IU; data obtained from valid assays only are combined by the usual statistical methods (for example, *5.3*) to calculate the virus concentration of the sample. The confidence interval (P = 0.95) of the combined virus concentration is not greater than ± 0.3 $\log_{10}$ IU.

Where justified and authorised, different assay designs may be used; this may imply the application of different validity and acceptance criteria. However, the vaccine must comply if tested as described above.

LABELLING

The label states:

- the strain of virus used in preparation of the vaccine;
- that the vaccine has been prepared in chick embryos;
- the minimum virus concentration;
- that contact between the vaccine and disinfectants is to be avoided.

04/2013:0441

ANTHRAX SPORE VACCINE (LIVE) FOR VETERINARY USE

Vaccinum anthracis vivum ad usum veterinarium

1. DEFINITION

Anthrax spore vaccine (live) for veterinary use is a preparation of live spores of a suitable attenuated, non-capsulated strain of *Bacillus anthracis*. This monograph applies to vaccines intended for the active immunisation of animals against disease caused by *B. anthracis*.

2. PRODUCTION

2-1. *PREPARATION OF THE VACCINE*

B. anthracis is grown in an appropriate medium. At the end of growth the spores are suspended in a stabilising solution and counted. The vaccine may be adjuvanted.

2-2. *CHOICE OF VACCINE STRAIN*

The strain used is:

- not lethal to the guinea-pig or the mouse,
- or lethal to the guinea-pig but not to the rabbit,
- or lethal to some rabbits.

The vaccine strain is shown to be satisfactory with respect to safety (*5.2.6*) and efficacy (*5.2.7*) for the animals for which it is intended.

The following test for immunogenicity (2-2-1) may be used during the demonstration of efficacy.

2-2-1. **Immunogenicity**. For a strain of *B. anthracis* which is not lethal to the guinea-pig or the mouse, the test may be carried out in guinea-pigs. For a strain which is lethal to the guinea-pig but not to the rabbit, the test may be carried out in rabbits. For a strain which is lethal to some rabbits, carry out the test in sheep.

If the test is carried out in guinea-pigs or in rabbits, use not fewer than 13 healthy animals (group a). Inject by the subcutaneous or the intradermal route into each of not fewer than 10 animals 1/10th of the smallest dose to be recommended for sheep. Maintain not fewer than 3 animals of the same species and the same origin as controls. Observe the animals at least daily for 21 days. If more than 2 animals die from non-specific causes, repeat the test.

If the test is carried out in sheep, use not fewer than 8 healthy sheep (group b). Vaccinate by the subcutaneous or the intradermal route each of not fewer than 5 sheep 1/10 of the smallest dose of the vaccine stated on the label for sheep. Maintain not fewer than 3 sheep of the same origin as controls. Observe the sheep at least daily for 21 days.

Challenge each vaccinated animal of group (a) or group (b) by a subcutaneous route with at least 100 MLD, and challenge each control animal by a subcutaneous route with at least 10 MLD of a strain of *B. anthracis* pathogenic for the species of animal used in the test. Observe all the animals at least daily for 10 days after challenge.

The vaccine complies with the test if during the observation period after challenge, all the vaccinated animals survive and all the controls die from anthrax. If a vaccinated animal dies after the challenge, repeat the test. If in the second test a vaccinated animal dies, the vaccine fails the test.

3. BATCH TESTS

3-1. **Identification**. *B. anthracis* present in the vaccine is identified by means of morphological and serological tests, culture and biochemical tests.

3-2. **Bacteria and fungi**. Carry out the test by microscopic examination and by inoculation of suitable media. The vaccine, including where applicable, the diluent supplied for reconstitution, does not contain contaminating bacteria and fungi.

3-3. **Live spores**. Make a count of live spores by plate count. The vaccine complies with the test if the number of live spores is not less than 80 per cent of that stated on the label.

3-4. **Potency**. The vaccine complies with the requirements of the test prescribed under Immunogenicity (section 2-2-1). It is not necessary to carry out the potency test for each batch of the vaccine if it has been carried out on a representative batch using a vaccinating dose containing not more than the minimum number of live spores stated on the label.

04/2013:0744

AUJESZKY'S DISEASE VACCINE (INACTIVATED) FOR PIGS

Vaccinum morbi Aujeszkyi ad suem inactivatum

1. DEFINITION

Aujeszky's disease vaccine (inactivated) for pigs is a preparation of a suitable strain of Aujeszky's disease virus, inactivated while maintaining adequate immunogenic properties, or a preparation of an inactivated fraction of the virus having adequate immunogenic properties. This monograph applies to vaccines intended for the active immunisation of pigs and for passive protection of their progeny against Aujeszky's disease.

2. PRODUCTION

2-1. *PREPARATION OF THE VACCINE*

The vaccine virus is grown in cell cultures. The viral suspension is harvested and inactivated; it may be treated to fragment the virus and the viral fragments may be purified and concentrated. The vaccine may be adjuvanted.

2-2. *SUBSTRATE FOR VIRUS PROPAGATION*

2-2-1. **Cell cultures**. The cell cultures comply with the requirements for cell cultures for production of veterinary vaccines (*5.2.4*).

2-3. *CHOICE OF VACCINE COMPOSITION*

The vaccine is shown to be satisfactory with respect to safety (*5.2.6*) and efficacy (*5.2.7*) for the pigs for which it is intended. The following tests for safety (section 2-3-1) and immunogenicity (section 2-3-2) may be used during the demonstration of safety and efficacy.

2-3-1. **Safety**

2-3-1-1. *Laboratory tests*. Carry out the tests for each route and method of administration to be recommended for vaccination and where applicable, in pigs of each category for which the vaccine is intended (sows, fattening pigs), using in each case pigs not older than the minimum age to be recommended for vaccination. Use a batch of vaccine containing not less than the maximum potency that may be expected in a batch of vaccine.

2-3-1-1-1. General safety. For each test, use not fewer than 8 pigs that do not have antibodies against Aujeszky's disease virus. Administer to each pig 1 dose of the vaccine. If the schedule to be recommended requires a 2nd dose, administer another dose after an interval of at least 14 days. Observe the pigs at least daily until 14 days after the last administration. If the test is carried out in pregnant sows, observe the sows until 1 day after farrowing.

The vaccine complies with the test if no pig shows abnormal local or systemic reactions or dies from causes attributable to the vaccine during the test. If the test is carried out in pregnant sows, no adverse effects on gestation or the offspring are noted.

2-3-1-1-2. Safety in the pigs used in tests 2-3-2 for immunogenicity. The pigs used in the tests for immunogenicity are also used to evaluate safety. Measure the body temperature of each vaccinated pig at the time of vaccination and 6 h, 24 h and 48 h later. Examine the injection site at slaughter for local reactions.

The vaccine complies with the test if no pig shows:

- a temperature rise greater than 1.5 °C and the number of pigs showing a temperature greater than 41 °C does not exceed 10 per cent of the group;
- other systemic reactions (for example, anorexia);
- abnormal local reactions attributable to the vaccine.

2-3-1-2. *Field studies*. The pigs used for field trials are also used to evaluate safety. Carry out a test in each category of pigs for which the vaccine is intended (sows, fattening pigs). Use not fewer than 3 groups each of not fewer than 20 pigs with corresponding groups of not fewer than 10 controls. Measure the body temperature of each vaccinated pig at the time of vaccination and 6 h, 24 h and 48 h later. Examine the injection site at slaughter for local reactions.

The vaccine complies with the test if no pig shows:

- a temperature rise greater than 1.5 °C and the number of pigs showing a temperature greater than 41 °C does not exceed 25 per cent of the group;
- abnormal local reactions attributable to the vaccine.

2-3-2. **Immunogenicity**. A test is carried out for each route and method of administration to be recommended, using in each case pigs of the age to be recommended for vaccination. The vaccine administered to each pig is of minimum potency.

2-3-2-1. *Vaccines intended for active immunisation*. Use for the test not fewer than 15 fattening pigs that do not have antibodies against Aujeszky's disease virus. The body mass of none of the pigs differs from the average body mass of the group by more than 20 per cent. Vaccinate not fewer than 10 pigs, according to the schedule to be recommended. Maintain not fewer than 5 pigs as controls. At the end of the fattening period (80-90 kg), weigh and challenge each pig by the intranasal route with a sufficient quantity of virulent Aujeszky's disease virus (challenge with at least 10^6 $CCID_{50}$ of a virulent strain having undergone not more than 3 passages and administered in not less than 4 mL of diluent has been found to be satisfactory). The titre of excreted virus is determined in swabs taken from the nasal cavity of each pig daily from the day before challenge until virus is no longer detected. Each pig is weighed 7 days after challenge or at the time of death if this occurs earlier and the average daily gain is calculated as a percentage. For each group (vaccinated and controls), the average of the average daily gains is calculated.

The test is invalid unless all the control pigs display signs of Aujeszky's disease and the average of their daily gains is less than – 0.5 kg. The vaccine complies with the test if:

- all the vaccinated pigs survive and the difference between the averages of the daily gains for the 2 groups is not less than 1.5 kg;
- the geometrical mean titres and the duration of excretion of the challenge virus are significantly lower in vaccinates than in controls.

2-3-2-2. *Vaccines intended for passive immunisation*. If the vaccine is intended for use in sows for the passive protection of piglets, the suitability of the strain for this purpose may be demonstrated by the following method.

Use for the test not fewer than 12 sows that do not have antibodies against Aujeszky's disease virus. Vaccinate not fewer than 8 sows, according to the schedule to be recommended. Maintain not fewer than 4 sows as controls. At 6-10 days of age, challenge the piglets from the sows with a sufficient quantity of virulent Aujeszky's disease virus. Observe the piglets at least daily for 21 days.

The test is not valid if the average number of piglets per litter for each group is less than 6. The vaccine complies with the test if not less than 80 per cent protection against mortality is found in the piglets from the vaccinated sows compared to those from the control sows.

2-4. *MANUFACTURER'S TESTS*

2-4-1. **Residual live virus**. The test for residual live virus is carried out using 2 passages in the same type of cell culture as that used in the production of the vaccine or cells shown to be at least as sensitive. The quantity of inactivated virus harvest used in the test is equivalent to not less than 25 doses of the vaccine. The inactivated virus harvest complies with the test if no live virus is detected.

2-4-2. **Batch potency test**. It is not necessary to carry out the potency test (section 3-5) for each batch of vaccine if it has been carried out using a batch of vaccine with a minimum potency. The test described under Potency is carried out for a given vaccine, on one or more occasions, as decided by or with the agreement of the competent authority. Where this test is not carried out, an alternative validated method is used, the criteria for acceptance being set with reference to a batch of vaccine that has given satisfactory results in the test described under Potency.

3. BATCH TESTS

3-1. **Identification**. In animals that do not have antibodies against Aujeszky's disease virus or against a fraction of the virus, the vaccine stimulates the production of specific antibodies against Aujeszky's disease virus or the fraction of the virus used in the production of the vaccine.

3-2. **Bacteria and fungi**. The vaccine, including where applicable the diluent supplied for reconstitution, complies with the test for sterility prescribed in the monograph *Vaccines for veterinary use (0062)*.

3-3. **Residual live virus**. Wherever possible, carry out a suitable test for residual live Aujeszky's disease virus using 2 passages in the same type of cell culture as used in the production of the vaccine or cells shown to be at least as sensitive. Otherwise, inject 1 dose of the vaccine subcutaneously into each of 5 healthy non-immunised rabbits. Observe the rabbits for 14 days after the injection. The vaccine complies with the test if no abnormal reaction (in particular a local rash) occurs. If the vaccine strain is not pathogenic for the rabbit, carry out the test in 2 sheep.

3-4. **Specified extraneous agents**. Use not fewer than 2 pigs that do not have antibodies against Aujeszky's disease virus and against pestiviruses. Administer to each pig by a recommended route a double dose of the vaccine, then another dose after 14 days. 14 days after the last administration, carry out tests for antibodies. The vaccine complies with the test if it does not stimulate the formation of antibodies against pestiviruses.

3-5. **Potency**. The vaccine complies with the requirements of the test described below when administered by a recommended route and method.

Use for the test not fewer than 10 pigs weighing 15-35 kg and that do not have antibodies against Aujeszky's disease virus or against a fraction of the virus. The body mass of none of the pigs differs from the average body mass of the group by more than 25 per cent. Vaccinate not fewer than 5 pigs with 1 dose of the vaccine. Maintain not fewer than 5 pigs as controls. After 3 weeks, weigh each pig, then challenge them by the intranasal route with a sufficient quantity of virulent Aujeszky's disease virus. Weigh each animal 7 days after challenge or at the time of death if this occurs earlier and calculate the average daily gain as a percentage. For each group (vaccinated and controls), calculate the average of the average daily gains.

The test is invalid unless all the control pigs display signs of Aujeszky's disease and the average of their daily gains is less than – 0.5 kg. The vaccine complies with the test if

the vaccinated pigs survive and the difference between the averages of the daily gains for the 2 groups is not less than 1.1 kg.

4. LABELLING

The label states whether the vaccine strain is pathogenic for the rabbit.

01/2014:0745

AUJESZKY'S DISEASE VACCINE (LIVE) FOR PIGS FOR PARENTERAL ADMINISTRATION

Vaccinum morbi Aujeszkyi vivum ad suem ad usum parenteralem

1. DEFINITION

Aujeszky's disease vaccine (live) for pigs for parenteral administration is a preparation of a suitable strain of Aujeszky's disease virus. This monograph applies to vaccines intended for the active immunisation of pigs and for passive protection of their progeny against Aujeszky's disease. The vaccine may be administered after mixing with an adjuvant.

2. PRODUCTION

2-1. *PREPARATION OF THE VACCINE*

The vaccine virus is grown in cell cultures.

2-2. *SUBSTRATE FOR VIRUS PROPAGATION*

2-2-1. **Cell cultures**. The cell cultures comply with the requirements for cell cultures for the production of veterinary vaccines (*5.2.4*).

2-3. *CHOICE OF VACCINE VIRUS*

The vaccine virus is shown to be satisfactory with respect to safety (*5.2.6*) and efficacy (*5.2.7*) for the pigs for which it is intended. The virus may have a genetic marker.

The following tests for safety (section 2-3-1), virus excretion (section 2-3-2), non-transmissibility, including transmission across the placenta and by semen (section 2-3-3), increase in virulence (section 2-3-4) and immunogenicity (section 2-3-5), may be used during the demonstration of safety and efficacy.

2-3-1. **Safety**

2-3-1-1. *Safety test in piglets*. Carry out the test for each route and method of administration to be recommended for vaccination, using in each case piglets 3-4 weeks old. Use vaccine virus at the least attenuated passage level that will be present between the master seed lot and a batch of the vaccine.

For each test, use not fewer than 20 piglets that do not have antibodies against Aujeszky's disease virus. Administer to not fewer than 10 piglets a quantity of the vaccine virus equivalent to not less than 10 times the maximum virus titre likely to be contained in 1 dose of the vaccine. Maintain not fewer than 10 piglets as controls. Observe the piglets at least daily for at least 21 days.

The vaccine virus complies with the test if the weight curve of the vaccinated piglets does not differ significantly from that of the controls and if no piglet shows signs of disease or dies from causes attributable to the vaccine virus.

2-3-1-2. *Safety of the pigs used in tests 2-3-5 for immunogenicity*. The pigs used in the tests for immunogenicity are also used to evaluate safety. Measure the body temperature of each vaccinated pig at the time of vaccination and 6 h, 24 h and 48 h later. Examine the injection site at slaughter for local reactions.

The vaccine virus complies with the test if no pig shows:

- a temperature rise greater than 1.5 °C and the number of pigs showing a temperature greater than 41 °C does not exceed 10 per cent of the group;
- other systemic reactions (for example, anorexia);
- abnormal local reactions attributable to the vaccine virus.

2-3-1-3. *Safety in field studies*. The pigs used for field trials are also used to evaluate safety. Carry out a test in each category of pigs for which the vaccine is intended (sows, fattening pigs). Use not fewer than 3 groups, each of not fewer than 20 pigs, with corresponding groups of not fewer than 10 controls. Measure the body temperature of each pig at the time of vaccination and 6 h, 24 h and 48 h later. Examine the injection site at slaughter for local reactions.

The vaccine virus complies with the test if no pig shows:

- a temperature rise greater than 1.5 °C and the number of pigs showing a temperature greater than 41 °C does not exceed 25 per cent of the group;
- abnormal local reactions attributable to the vaccine virus.

2-3-1-4. *Neurological safety*. Use for the test not fewer than 10 piglets, 3-5 days old and that do not have antibodies against Aujeszky's disease virus. Administer to each piglet by the intranasal route a quantity of the vaccine virus equivalent to not less than 10 times the maximum virus titre likely to be contained in 1 dose of the vaccine. Observe the piglets at least daily for at least 21 days.

The vaccine virus complies with the test if none of the piglets dies or shows signs of neurological disorder attributable to the vaccine virus.

2-3-1-5. *Neurological safety for strains other than gE-negative*. This test is not necessary for gE-negative strains. Administer to not fewer than 5 piglets, 3-5 days old, by the intracerebral route, $10^{4.5}$ $CCID_{50}$ of vaccine virus.

The vaccine virus complies with the test if none of the piglets dies or shows signs of neurological disorder.

2-3-1-6. *Absence of latent infections*. Use for the test not fewer than 10 piglets, 3-4 weeks old and that do not have antibodies against Aujeszky's disease virus. Administer to each piglet a daily injection of 2 mg of prednisolone per kilogram of body mass for 5 consecutive days. On the 3rd day administer to each piglet a quantity of vaccine virus equivalent to not less than the maximum virus titre likely to be contained in 1 dose of the vaccine by a route to be recommended. Antimicrobial agents may be administered to prevent aspecific signs. Observe the piglets at least daily for at least 21 days.

The vaccine virus complies with the test if no piglet shows signs of disease or dies from causes attributable to the vaccine virus.

2-3-1-7. *Safety in pregnant sows and absence of transmission across the placenta*. Use for the test not fewer than 15 pregnant sows that do not have antibodies against Aujeszky's disease virus. Administer to not fewer than 5 sows, by a route to be recommended, a quantity of vaccine virus equivalent to not less than 10 times the maximum virus titre likely to be contained in 1 dose of the vaccine during the 4th or 5th week of gestation. Administer to not fewer than 5 other sows the same dose of the virus by the same route during the 10th or 11th weeks of gestation. Maintain not fewer than 5 other pregnant sows as controls. For the piglets from vaccinated sows: carry out tests for serum antibodies against Aujeszky's disease virus; carry out tests for Aujeszky's disease virus antigen in the liver and lungs of those piglets showing abnormalities and in a quarter of the remaining healthy piglets.

The vaccine virus complies with the test if:

- the number of piglets born to the vaccinated sows, any abnormalities in the piglets and the duration of gestation do not differ significantly from those of the controls;
- no Aujeszky's disease virus antigen is found in piglets born to the vaccinated sows;
- no antibodies against Aujeszky's disease virus are found in the serum taken before ingestion of the colostrum.

2-3-2. **Virus excretion**. Use for the test not fewer than 18 pigs, 3-4 weeks old and that do not have antibodies against Aujeszky's disease virus. Administer to not fewer than 14 pigs

Vaccines

a quantity of the vaccine virus equivalent to not less than the maximum virus titre likely to be contained in 1 dose of the vaccine by a route and a site to be recommended. Maintain not fewer than 4 pigs as contact controls. Carry out suitably sensitive tests for the virus individually on the nasal and oral secretions as follows: collect nasal and oral swabs daily from the day before vaccination until 10 days after vaccination.

The vaccine complies with the test if the virus is not isolated from the secretions collected.

2-3-3. **Non-transmissibility**. Carry out the test on 4 separate occasions. Each time, administer to not fewer than 4 piglets, 3-4 weeks old and that do not have antibodies against Aujeszky's disease virus, by a route to be recommended, a quantity of the vaccine virus equivalent to not less than the maximum virus titre likely to be contained in 1 dose of the vaccine. After 1 day, keep not fewer than 2 other piglets of the same age and that do not have antibodies against Aujeszky's disease virus close together with them. After 5 weeks, test all the piglets for the presence of antibodies against Aujeszky's disease virus.

The test is not valid if any vaccinated piglet does not show an antibody response. The vaccine virus complies with the test if no antibodies against Aujeszky's disease virus are detected in any group of contact controls and if all the vaccinated piglets show an antibody response.

2-3-4. **Increase in virulence**. Carry out the test according to general chapter *5.2.6* using piglets 3-5 days old and that do not have antibodies against Aujeszky's disease virus. If the properties of the vaccine virus allow sequential passage through 5 groups via natural spreading, this method may be used, otherwise passage as described below is carried out.

Administer to each piglet of the 1st group by the intranasal route a quantity of the vaccine virus that will allow recovery of virus for the passages described below. After 3-5 days, prepare a suspension from the brain, lung, tonsils and local lymph glands of each piglet and pool the samples. Administer 1 mL of the suspension of pooled samples by the intranasal route to each piglet of the next group. Carry out this passage operation not fewer than 4 times, verify the presence of the virus at each passage. If the virus is not found at a passage level, repeat the passage by administration to a group of 10 animals.

If the 5th group of animals shows no evidence of an increase in virulence indicative of reversion during the observation period, further testing is not required. Otherwise, carry out an additional safety test and compare the clinical signs and any relevant parameters in a group of at least 8 animals receiving the material used for the 1st passage and another similar group receiving the virus at the final passage level.

The vaccine virus complies with the test if no indication of increased virulence of the virus recovered for the final passage compared with the material used for the 1st passage is observed. If virus is not recovered after an initial passage in 2 animals and a subsequent repeat passage in 10 animals, the vaccine virus also complies with the test.

2-3-5. **Immunogenicity**. A test is carried out for each route and method of administration to be recommended for vaccination. The quantity of vaccine virus to be administered to each pig is not greater than the minimum virus titre to be stated on the label and the virus is at the most attenuated passage level that will be present in a batch of vaccine.

2-3-5-1. *Vaccines intended for active immunisation*. Use for the test not fewer than 15 fattening pigs of the age to be recommended and that do not have antibodies against Aujeszky's disease virus. The body mass of none of the pigs differs from the average body mass of the group by more than 20 per cent. Vaccinate not fewer than 10 pigs, according to the schedule to be recommended. Maintain not fewer than 5 pigs as controls. At the end of the fattening period (80-90 kg), weigh and challenge each pig by the intranasal route with a sufficient quantity of virulent Aujeszky's disease virus (challenge with at least 10^6 $CCID_{50}$ of a virulent strain having undergone not more than 3 passages and administered in not less than 4 mL of diluent has been found to be satisfactory). Determine the titre of virus in swabs taken from the nasal cavity of each pig daily from the day before challenge until virus is no longer detected. Weigh each pig 7 days after challenge or at the time of death if this occurs earlier and calculate the average daily gain as a percentage. For each group (vaccinated and controls), calculate the average of the average daily gains.

The test is invalid unless all the control pigs display signs of Aujeszky's disease and the average of their average daily gains is less than – 0.5 kg. The vaccine complies with the test if:

- all the vaccinated pigs survive and the difference between the averages of the average daily gains for the 2 groups is not less than 1.5 kg;
- the geometrical mean titres and the duration of excretion of the challenge virus are significantly lower in vaccinates than in controls.

2-3-5-2. *Vaccines intended for passive protection*. If the vaccine is intended for use in sows for the passive protection of piglets, the suitability of the vaccine virus for this purpose may be demonstrated by the following method.

Use for the test not fewer than 12 sows that do not have antibodies against Aujeszky's disease virus. Vaccinate not fewer than 8 sows, according to the schedule to be recommended. Maintain not fewer than 4 sows as controls. At 6-10 days of age, challenge the piglets from the sows with a sufficient quantity of virulent Aujeszky's disease virus. Observe the piglets at least daily for 21 days.

The test is not valid if the average number of piglets per litter for each group is less than 6.

The vaccine complies with the test if not less than 80 per cent protection against mortality is found in the piglets from the vaccinated sows compared to those from the control sows.

2-4. *MANUFACTURER'S TESTS*

2-4-1. **Batch potency test**. It is not necessary to carry out the Potency test (section 3-6) for each batch of the vaccine if it has been carried out on a representative batch using a vaccinating dose containing not more than the minimum virus titre stated on the label. The test described under Potency is carried out for a given vaccine, on one or more occasions, as decided by or with the agreement of the competent authority. Where this test is not carried out, an alternative validated method is used, the criteria for acceptance being set with reference to a batch of vaccine that has given satisfactory results in the test described under Potency.

3. BATCH TESTS

3-1. **Identification**. The vaccine virus is identified by a suitable method, e.g. when mixed with a monospecific antiserum, the vaccine virus is no longer able to infect susceptible cell cultures into which it is inoculated.

3-2. **Bacteria and fungi**. The vaccine, including where applicable, the diluent supplied for reconstitution, complies with the test for sterility prescribed in the monograph *Vaccines for veterinary use (0062)*.

3-3. **Mycoplasmas** (*2.6.7*). The vaccine complies with the test for mycoplasmas.

3-4. **Extraneous agents**. Neutralise the vaccine virus with a suitable monospecific antiserum or monoclonal antibodies against Aujeszky's disease virus and inoculate into cell cultures known for their susceptibility to viruses pathogenic for pigs and to pestiviruses. Carry out at least 1 passage and maintain the cultures for 14 days. The vaccine complies with the test if no cytopathic effect develops and there is no sign of the presence of haemadsorbing agents. Carry out a specific test for pestiviruses.

3-5. **Virus titre**. Titrate the vaccine virus in suitable cell cultures. The vaccine complies with the test if 1 dose contains not less than the minimum virus titre stated on the label.

3-6. **Potency**. The vaccine complies with the requirements of the test described below when administered by a recommended route and method.

Use not fewer than 10 pigs weighing 15-35 kg and that do not have antibodies against Aujeszky's disease virus. The body mass of none of the pigs differs from the average body mass of the group by more than 25 per cent. Vaccinate not fewer than 5 pigs with 1 dose of the vaccine. Maintain not fewer than 5 pigs as controls. After 3 weeks, weigh each pig, then challenge them by the intranasal route with a sufficient quantity of virulent Aujeszky's disease virus. Weigh each pig 7 days after challenge or at the time of death if this occurs earlier and calculate the average daily gain as a percentage. For each group (vaccinated and controls), calculate the average of the average daily gains.

The test is invalid unless all the control pigs display signs of Aujeszky's disease and the average of their average daily gains is less than – 0.5 kg. The vaccine complies with the test if all the vaccinated pigs survive and the difference between the averages of the average daily gains for the 2 groups is not less than 1.6 kg.

04/2013:0959

AVIAN INFECTIOUS BRONCHITIS VACCINE (INACTIVATED)

Vaccinum bronchitidis infectivae aviariae inactivatum

1. DEFINITION

Avian infectious bronchitis vaccine (inactivated) is a preparation of one or more suitable strains of one or more serotypes of avian infectious bronchitis virus, inactivated while maintaining adequate immunogenic properties. This monograph applies to vaccines intended to protect birds against a drop in egg production or quality; for vaccines also intended for protection against respiratory signs, a demonstration of efficacy additional to that described under Potency is required.

2. PRODUCTION

2-1. *PREPARATION OF THE VACCINE*

The vaccine virus is propagated in fertilised hens' eggs or in cell cultures. The vaccine may be adjuvanted.

2-2. *SUBSTRATE FOR VIRUS PROPAGATION*

2-2-1. **Embryonated hens' eggs**. If the vaccine virus is grown in embryonated hens' eggs, they are obtained from healthy flocks.

2-2-2. **Cell cultures**. If the vaccine is grown in cell cultures, they comply with the requirements for cell cultures for production of veterinary vaccines (*5.2.4*).

2-3. *SEED LOTS*

2-3-1. **Extraneous agents**. The master seed lot complies with the test for extraneous agents in seed lots (*2.6.24*). In these tests on the master seed lot, the organisms used are not more than 5 passages from the master seed lot at the start of the test.

2-4. *CHOICE OF VACCINE COMPOSITION*

The vaccine is shown to be satisfactory with respect to safety (*5.2.6*) and efficacy (*5.2.7*) for the birds for which it is intended.

The following tests for safety (section 2-4-1) and immunogenicity (section 2-4-2) may be used during the demonstration of safety and efficacy.

2-4-1. **Safety**. The test is carried out for each route of administration to be recommended for vaccination and for each avian species for which the vaccine is intended. Use a batch of vaccine containing not less than the maximum potency that may be expected in a batch of vaccine.

For each test, use not fewer than 8 birds not older than the minimum age to be recommended for vaccination. In the case of chickens, use chickens from a flock free from specified pathogens (SPF) (*5.2.2*) and if the vaccine is used for species other than chickens, they have not been vaccinated and do not have antibodies against avian infectious bronchitis virus. Administer by a route to be recommended and method to each bird 1 dose of the vaccine. Observe the birds for at least daily for at least 14 days after the administration of the vaccine.

The test is not valid if non-specific mortality occurs. The vaccine complies with the test if no bird shows abnormal signs of disease or dies from causes attributable to the vaccine.

2-4-2. **Immunogenicity**. A test is carried out for each route and method of administration to be recommended, using in each case chickens from an SPF flock (*5.2.2*) and for each serotype in the vaccine. The vaccine administered to each chicken is of minimum potency.

Use for the test 4 groups of not fewer than 30 chickens treated as follows:

- group A: unvaccinated controls;
- group B: vaccinated with inactivated avian infectious bronchitis vaccine;
- group C: vaccinated with live avian infectious bronchitis vaccine and inactivated avian infectious bronchitis vaccine according to the schedule to be recommended;
- group D: vaccinated with live avian infectious bronchitis vaccine.

Monitor egg production and quality in all chickens from point of lay until at least 4 weeks after challenge. At the peak of lay, challenge all groups with a quantity of virulent avian infectious bronchitis virus sufficient to cause a drop in egg production or quality over 3 consecutive weeks during the 4 weeks following challenge. The test is invalid unless there is a drop in egg production in group A compared to the normal level noted before challenge of at least 35 per cent where challenge has been made with a Massachusetts-type strain; where it is necessary to carry out a challenge with a strain of another serotype for which there is documented evidence that the strain will not cause a 35 per cent drop in egg production, the challenge must produce a drop in egg production commensurate with the documented evidence and in any case not less than 15 per cent. The vaccine complies with the test if egg production or quality is significantly better in group C than in group D and significantly better in group B than in group A.

2-5. *MANUFACTURER'S TESTS*

2-5-1. **Residual live virus**. An amplification test for residual live avian infectious bronchitis virus is carried out on each batch of antigen immediately after inactivation and on the final bulk vaccine or, if the vaccine contains an adjuvant, on the bulk antigen or mixture of bulk antigens immediately before the addition of adjuvant; the test is carried out in embryonated hen eggs from SPF flocks (*5.2.2*) or in suitable cell cultures (*5.2.4*), whichever is the most sensitive for the vaccine strain. The quantity of inactivated virus harvest used in the test is equivalent to not less than 10 doses of vaccine. The vaccine complies with the test if no live virus is detected.

2-5-2. **Batch potency test**. It is not necessary to carry out the potency test (section 3-5) for each batch of vaccine if it has been carried out using a batch of vaccine with a minimum potency. Where the test is not carried out, an alternative validated method is used, the criteria for acceptance being set

with reference to a batch of vaccine that has given satisfactory results in the test described under Potency. The following test may be used.

Administer 1 dose of vaccine by the intramuscular route to each of not fewer than 10 chickens, between 2 weeks of age and the minimum age stated for vaccination and from an SPF flock (*5.2.2*), and maintain 5 hatch mates as unvaccinated controls. Collect serum samples from each chicken just before administration of the vaccine and after the period defined when testing the reference vaccine; determine the antibody titre of each serum, for each serotype in the vaccine, by a suitable serological method, for example, serum neutralisation. The test is invalid unless the sera collected from the unvaccinated controls and from the chickens just before the administration of the vaccine are free from detectable specific antibody. The vaccine complies with the test if the antibody levels are not significantly less than those obtained with a batch that has given satisfactory results in the test described under Potency.

3. BATCH TESTS

3-1. **Identification**. When injected into chickens that do not have antibodies against each of the virus serotypes in the vaccine, the vaccine stimulates the production of such antibodies, detectable by virus neutralisation.

3-2. **Bacteria and fungi**. The vaccine, including where applicable the diluent supplied for reconstitution, complies with the test for sterility prescribed in the monograph *Vaccines for veterinary use (0062)*.

3-3. **Residual live virus**. A test for residual live virus is carried out to confirm inactivation of avian infectious bronchitis virus.

A. For vaccine prepared with embryo-adapted strains of virus, inject 2/5 of a dose into the allantoic cavity of ten 9- to 11-day-old embryonated hens' eggs from an SPF flock (*5.2.2*) and incubate. Observe for 5-6 days and pool separately the allantoic liquid from eggs containing live embryos and that from eggs containing dead embryos, excluding those that die within the first 24 h after injection. Examine for abnormalities all embryos which die after 24 h of injection or which survive 5-6 days. No death or abnormality attributable to the vaccine virus occurs. Inject into the allantoic cavity of each of ten 9- to 11-day-old embryonated hens' eggs from an SPF flock (*5.2.2*) 0.2 mL of the pooled allantoic liquid from the live embryos and into each of 10 similar eggs 0.2 mL of the pooled liquid from the dead embryos and incubate for 5-6 days. Examine for abnormalities all embryos which die after 24 h of injection or which survive 5-6 days. If more than 20 per cent of the embryos die at either stage repeat the test from that stage. The vaccine complies with the test if there is no death or abnormality attributable to the vaccine virus.

B. For vaccine prepared with cell-culture-adapted strains of virus, inoculate 10 doses of the vaccine into suitable cell cultures. If the vaccine contains an oil adjuvant, eliminate it by suitable means. Incubate at 38 ± 1 °C for 7 days. Make a passage on another set of cell cultures and incubate at 38 ± 1 °C for 7 days. The vaccine complies with the test if none of the cultures show signs of infection.

3-4. **Specified extraneous agents**. Use 10 chickens, 14-28 days old, from an SPF flock (*5.2.2*). Vaccinate each chicken by a recommended route with a double dose of the vaccine. After 3 weeks, administer 1 dose by the same route. Collect serum samples from each chicken 2 weeks later and carry out tests for antibodies against the following agents by the methods prescribed in general chapter *5.2.2. Chicken flocks free from specified pathogens for the production and quality control of vaccines*: avian encephalomyelitis virus, avian leucosis viruses, egg-drop syndrome virus, avian infectious bursal disease virus, avian infectious laryngotracheitis virus, influenza A virus, Marek's disease virus, Newcastle disease virus.

The vaccine complies with the test if it does not stimulate the formation of antibodies against these agents.

3-5. **Potency**. The vaccine complies with the requirements of the test mentioned under Immunogenicity (section 2-4-2) when administered by a recommended route and method.

4. LABELLING

The label states whether the strain in the vaccine is embryo-adapted or cell-culture-adapted.

04/2013:0442

AVIAN INFECTIOUS BRONCHITIS VACCINE (LIVE)

Vaccinum bronchitidis infectivae aviariae vivum

1. DEFINITION

Avian infectious bronchitis vaccine (live) is a preparation of one or more suitable strains of different types of avian infectious bronchitis virus. This monograph applies to vaccines intended for administration to chickens for active immunisation against respiratory disease caused by avian infectious bronchitis virus.

2. PRODUCTION

2-1. *PREPARATION OF THE VACCINE*

The vaccine virus is grown in embryonated hens' eggs or in cell cultures.

2-2. *SUBSTRATE FOR VIRUS PROPAGATION*

2-2-1. **Embryonated hens' eggs**. If the vaccine virus is grown in embryonated hens' eggs, they are obtained from flocks free from specified pathogens (SPF) (*5.2.2*).

2-2-2. **Cell cultures**. If the vaccine virus is grown in cell cultures, they comply with the requirements for cell cultures for production of veterinary vaccines (*5.2.4*).

2-3. *SEED LOTS*

2-3-1. **Extraneous agents**. The master seed lot complies with the tests for extraneous agents in seed lots (*2.6.24*). In these tests on the master seed lot, the organisms used are not more that 5 passages from the master seed lot at the start of the test.

2-4. *CHOICE OF VACCINE VIRUS*

The vaccine virus shall be shown to be satisfactory with respect to safety (*5.2.6*) and efficacy (*5.2.7*) for the chickens for which it is intended.

The following tests for safety (section 2-4-1), increase in virulence (section 2-4-2) and immunogenicity (section 2-4-3) may be used during the demonstration of safety and efficacy.

2-4-1. **Safety**

2-4-1-1. *Safety for the respiratory tract and kidneys*. Carry out the test in chickens not older than the minimum age to be recommended for vaccination. Use vaccine virus at the least attenuated passage level that will be present between the master seed lot and a batch of the vaccine.

Use not fewer than 15 chickens of the same origin and from an SPF flock (*5.2.2*). Administer to each chicken by the oculonasal route a quantity of the vaccine virus equivalent to not less than 10 times the maximum virus titre likely to be contained in 1 dose of the vaccine. On each of days 5, 7 and 10 after administration of the virus, euthanise not fewer than 5 of the chickens and take samples of trachea and kidney. Fix kidney samples for histological examination. Remove the tracheas and prepare 3 transverse sections from the upper part, 4 from the middle part and 3 from the lower part of

Vaccines

the trachea of each chicken; examine all tracheal explants as soon as possible and at the latest 2 h after sampling by low-magnification microscopy for ciliary activity. Score for ciliostasis on a scale from 0 (100 per cent ciliary activity) to 4 (no activity, complete ciliostasis); calculate the mean ciliostasis score (the maximum for each trachea being 40) for the 5 chickens euthanised on each of days 5, 7 and 10.

The test is not valid if more than 10 per cent of the chickens die from causes not attributable to the vaccine virus.

The vaccine virus complies with the test if:

- no chicken shows notable clinical signs of avian infectious bronchitis or dies from causes attributable to the vaccine virus;
- any inflammatory lesions seen during the kidney histological examination are, at most, moderate.

A risk/benefit analysis is carried out, taking into account the average ciliostasis scores obtained and the benefits expected from the use of the vaccine.

2-4-1-2. *Safety for the reproductive tract.* If the recommendations for use state or imply that the vaccine may be used in females less than 3 weeks old that are subsequently kept to sexual maturity, it shall be demonstrated that there is no damage to the development of the reproductive tract when the vaccine is given to chickens of the minimum age to be recommended for vaccination.

The following test may be carried out: use not fewer than 40 female chickens from an SPF flock (*5.2.2*) that are not older than the minimum age to be recommended for vaccination; use the vaccine virus at the least attenuated passage level that will be present between the master seed lot and a batch of the vaccine; administer to each chicken by a route to be recommended a quantity of virus equivalent to not less than the maximum titre likely to be present in 1 dose of vaccine; at least 10 weeks after administration of the vaccine virus, euthanise the chickens and carry out a macroscopic examination of the oviducts. The vaccine virus complies with the test if abnormalities are present in not more than 5 per cent of the oviducts.

2-4-2. **Increase in virulence**. Carry out the test according to general chapter *5.2.6* using 2-week-old SPF chickens (*5.2.2*). If the properties of the vaccine virus allow sequential passage through 5 groups via natural spreading, this method may be used, otherwise, passage as described below is carried out.

Administer to each chicken of the 1st group by eye-drop a quantity of the vaccine virus that will allow recovery of virus for the passages described below. 2-4 days after administration of the vaccine virus, prepare a suspension from the mucosa of the trachea of each chicken and pool these samples. Administer 0.05 mL of the pooled samples by eye-drop to each chicken of the next group. Carry out this passage operation not fewer than 4 times; verify the presence of the virus at each passage. If the virus is not found at a passage level, repeat the passage by administration to a group of 10 chickens. Carry out the test for safety for the respiratory tract and kidneys (section 2-4-1-1) and, where applicable, the test for safety for the reproductive tract (section 2-4-1-2) using the material used for the 1st passage and the virus at the final passage level. Administer the virus by the route to be recommended for vaccination that is likely to be the least safe.

The vaccine virus complies with the test if no indication of an increase in virulence of the virus recovered for the final passage compared with the material used for the 1st passage is observed. If virus is not recovered after an initial passage in 5 animals and a subsequent repeat passage in 10 animals, the vaccine virus also complies with the test.

2-4-3. **Immunogenicity**. Immunogenicity is demonstrated for each strain of virus to be included in the vaccine. A test is carried out for each route and method of administration to be recommended using in each case chickens from an SPF flock (*5.2.2*) that are not older than the minimum age to be recommended for vaccination. The quantity of the vaccine virus administered to each chicken is not greater than the minimum virus titre to be stated on the label and the virus is at the most attenuated passage level that will be present in a batch of the vaccine.

Either or both of the tests below may be used during the demonstration of immunogenicity.

2-4-3-1. *Ciliary activity of tracheal explants.* Use not fewer than 25 chickens of the same origin and from an SPF flock (*5.2.2*). Vaccinate by a route to berecommended not fewer than 20 chickens. Maintain not fewer than 5 chickens as controls. Challenge each chicken after 21 days by eye-drop with a sufficient quantity of virulent avian infectious bronchitis virus of the same type as the vaccine virus to be tested. Euthanise the chickens 4-7 days after challenge and prepare 3 transverse sections from the upper part, 4 from the middle part, and 3 from the lower part of the trachea of each chicken. Examine all tracheal explants as soon as possible and at the latest 2 h after sampling by low-magnification microscopy for ciliary activity. For a given tracheal section, ciliary activity is considered as normal when at least 50 per cent of the internal ring shows vigorous ciliary movement. A chicken is considered not affected if not fewer than 9 out of 10 rings show normal ciliary activity.

The test is not valid if:

- fewer than 80 per cent of the control chickens show cessation or extreme loss of vigour of ciliary activity;
- and/or during the period between the vaccination and challenge, more than 10 per cent of vaccinated or control chickens show abnormal clinical signs or die from causes not attributable to the vaccine.

The vaccine virus complies with the test if not fewer than 80 per cent of the vaccinated chickens show normal ciliary activity.

2-4-3-2. *Virus recovery from tracheal swabs.* Use not fewer than 30 chickens of the same origin and from an SPF flock (*5.2.2*). Vaccinate by a route to be recommended not fewer than 20 chickens. Maintain not fewer than 10 chickens as controls. Challenge each chicken after 21 days by eye-drop with a sufficient quantity of virulent avian infectious bronchitis virus of the same type as the vaccine virus to be tested. Euthanise the chickens 4-7 days after challenge and prepare a suspension from swabs of the tracheal mucosa of each chicken. Inoculate 0.2 mL of the suspension into the allantoic cavity of each of 5 embryonated hens' eggs, 9-11 days old, from an SPF flock (*5.2.2*). Incubate the eggs for 6-8 days after inoculation. Eggs that after 1 day of incubation do not contain a live embryo are eliminated and considered as non-specific deaths. Record the other eggs containing a dead embryo and after 6-8 days' incubation examine each egg containing a live embryo for lesions characteristic of avian infectious bronchitis. Make successively 3 such passages. If 1 embryo of a series of eggs dies or shows characteristic lesions, the inoculum is considered to be a carrier of avian infectious bronchitis virus. The examination of a series of eggs is considered to be definitely negative if no inoculum concerned is a carrier.

The test is not valid if:

- the challenge virus is re-isolated from fewer than 80 per cent of the control chickens;
- and/or during the period between vaccination and challenge, more than 10 per cent of the vaccinated or control chickens show abnormal clinical signs or die from causes not attributable to the vaccine;
- and/or more than 1 egg in any group is eliminated because of non-specific embryo death.

The vaccine virus complies with the test if the challenge virus is re-isolated from not more than 20 per cent of the vaccinated chickens.

3. BATCH TESTS

3-1. **Identification**

3-1-1. *Vaccines containing one type of virus*. The vaccine, diluted if necessary and mixed with avian infectious bronchitis virus antiserum specific for the virus type, no longer infects embryonated hens' eggs from an SPF flock (*5.2.2*) or susceptible cell cultures (*5.2.4*) into which it is inoculated.

3-1-2. *Vaccines containing more than one type of virus*. The vaccine, diluted if necessary and mixed with type-specific antisera against each strain present in the vaccine except that to be identified, infects embryonated hens' eggs from an SPF flock (*5.2.2*) or susceptible cell cultures (*5.2.4*) into which it is inoculated, whereas after further admixture with type-specific antiserum against the strain to be identified it no longer produces such infection.

3-2. **Bacteria and fungi**. Vaccines intended for administration by injection comply with the test for sterility prescribed in the monograph *Vaccines for veterinary use (0062)*.

Frozen or freeze-dried vaccines produced in embryonated eggs and not intended for administration by injection comply either with the test for sterility prescribed in the monograph *Vaccines for veterinary use (0062)* or with the following test: carry out a quantitative test for bacterial and fungal contamination; carry out identification tests for micro-organisms detected in the vaccine; the vaccine does not contain pathogenic micro-organisms and contains not more than 1 non-pathogenic micro-organism per dose.

Any diluent supplied for reconstitution of the vaccine complies with the test for sterility prescribed in the monograph *Vaccines for veterinary use (0062)*.

3-3. **Mycoplasmas**. The vaccine complies with the test for mycoplasmas (*2.6.7*).

3-4. **Extraneous agents**. The vaccine complies with the tests for extraneous agents in batches of finished product (*2.6.25*).

3-5. **Virus titre**. Titrate the vaccine virus by inoculation into embryonated hens' eggs from an SPF flock (*5.2.2*) or into suitable cell cultures (*5.2.4*). If the vaccine contains more than 1 strain of virus, titrate each strain after having neutralised the others with type-specific avian infectious bronchitis antisera. The vaccine complies with the test if 1 dose contains for each vaccine virus not less than the minimum titre stated on the label.

3-6. **Potency**. The vaccine complies with the requirements of 1 of the tests prescribed under Immunogenicity (section 2-4-3) when administered according to the recommended schedule by a recommended route and method. It is not necessary to carry out the potency test for each batch of the vaccine if it has been carried out on a representative batch using a vaccinating dose containing not more than the minimum virus titre stated on the label.

04/2013:0960

AVIAN INFECTIOUS BURSAL DISEASE VACCINE (INACTIVATED)

Vaccinum bursitidis infectivae aviariae inactivatum

1. DEFINITION

Avian infectious bursal disease vaccine (inactivated) is a preparation of a suitable strain of avian infectious bursal disease virus type 1, inactivated while maintaining adequate immunogenic properties. This monograph applies to vaccines intended for use in breeding chickens to protect their progeny from avian infectious bursal disease.

2. PRODUCTION

2-1. *PREPARATION OF THE VACCINE*

The vaccine virus is grown in embryonated hens' eggs or in cell cultures.

The vaccine may be adjuvanted.

2-2. *SUBSTRATE FOR VIRUS PROPAGATION*

2-2-1. **Embryonated hens' eggs**. If the vaccine virus is grown in embryonated hens' eggs, they are obtained from healthy flocks.

2-2-2. **Cell cultures**. If the vaccine is grown in cell cultures, they comply with the requirements for cell cultures for production of veterinary vaccines (*5.2.4*).

2-3. *SEED LOTS*

2-3-1. **Extraneous agents**. The master seed lot complies with the tests for extraneous agents in seed lots (*2.6.24*). In these tests on the master seed lot, the organisms used are not more than 5 passages from the master seed lot at the start of the test.

2-4. *CHOICE OF VACCINE COMPOSITION*

The vaccine is shown to be satisfactory with respect to safety (*5.2.6*) and efficacy (*5.2.7*) for the birds for which it is intended.

The following tests for safety (section 2-4-1) and immunogenicity (section 2-4-2) may be used during the demonstration of safety and efficacy.

2-4-1. **Safety**. The test is carried out for each route of administration to be recommended for vaccination. Use a batch of vaccine containing not less than the maximum potency that may be expected in a batch of vaccine.

For each test, use not fewer than 8 chickens not older than the minimum age to be recommended for vaccination and from a flock free from specified pathogens (SPF) (*5.2.2*). Administer by a route and method to be recommended to each chicken 1 dose of the vaccine. Observe the chickens at least daily for at least 14 days after the administration of the vaccine.

The test is not valid if non-specific mortality occurs. The vaccine complies with the test if no chicken shows abnormal signs of disease or dies from causes attributable to the vaccine.

2-4-2. **Immunogenicity**. A test is carried out for each route and method of administration to be recommended using in each case chickens from an SPF flock (*5.2.2*) and not older than the minimum age to be recommended for vaccination (close to the point of lay). The dose of vaccine administered to each chicken contains not more than the minimum potency to be stated on the label.

Where a challenge test is to be carried out, the following test may be used. Use 2 groups of not less than 20 hens treated as follows:

- group A: unvaccinated controls;
- group B: vaccinated with inactivated avian infectious bursal disease vaccine.

Serum samples are collected from each unvaccinated control (group A) hen just before administration of the vaccine, 4-6 weeks later, and at the time of egg collection for hatching. If a serological test is to be carried out for demonstration of immunogenicity by other routes, serum samples are also collected from each vaccinated (group B) hen at the time of egg collection for hatching. The antibody response is measured in a serum-neutralisation test.

Eggs are collected for hatching not less than 5 weeks after vaccination and the test described below is carried out with chickens at least 3 weeks old from that egg collection.

25 chickens from vaccinated (group B) hens and 10 control chickens of the same breed and age from unvaccinated (group A) hens are challenged with an eye-drop application of a quantity of a virulent strain of avian infectious bursal disease virus sufficient to produce severe signs of disease, including lesions of the bursa of Fabricius, in all unvaccinated chickens. 3-4 days after challenge, the bursa of Fabricius is removed

from each chicken. The bursae are examined for evidence of infection by histological examination and by testing for the presence of avian infectious bursal disease antigen by a suitable method. The vaccine complies with the test if 3 or fewer of the chickens from group B hens show evidence of avian infectious bursal disease. The test is invalid unless all the chickens from group A hens show evidence of avian infectious bursal disease.

Where there is more than one recommended route of administration, the test described under Potency is carried out in parallel with the above immunogenicity test, using different groups of birds for each recommended route. The serological response of the birds inoculated by routes other than that used in the immunogenicity test is not significantly less than that of the group vaccinated by that route.

2-5. *MANUFACTURER'S TESTS*

2-5-1. **Residual live virus**. An amplification test for residual live avian infectious bursal disease virus is carried out on each batch of antigen immediately after inactivation to confirm inactivation; the test is carried out in embryonated hens' eggs or in suitable cell cultures (*5.2.4*), whichever is the most sensitive for the vaccine strain; the quantity of inactivated virus harvest used in the test is equivalent to not less than 10 doses of the vaccine. The vaccine complies with the test if no live virus is detected.

2-5-2. **Batch potency test**. It is not necessary to carry out the potency test (section 3-5) for each batch of the vaccine if it has been carried out using a batch of vaccine with a minimum potency. Where the test is not carried out, an alternative validated method is used, the criteria for acceptance being set with reference to a batch of vaccine that has given satisfactory results in the test described under Potency. The following test may be used.

Vaccinate each of not fewer than 10 chickens, 14-28 days old and from an SPF flock (*5.2.2*), with 1 dose of vaccine by a recommended route. 4-6 weeks later, collect serum samples from each bird and 10 unvaccinated control birds of the same age and from the same source. Measure the antibody response in a serum-neutralisation test.

The test is not valid if there are specific antibodies in the sera of the unvaccinated birds. The vaccine complies with the test if the mean antibody titre in the sera from the vaccinated birds is equal to or greater than the titres obtained with a batch that has given satisfactory results in the test described under Potency.

3. BATCH TESTS

3-1. **Identification**. When injected into chickens that do not have antibodies against avian infectious bursal disease virus type 1, the vaccine stimulates the production of such antibodies.

3-2. **Bacteria and fungi**. The vaccine, including where applicable the diluent supplied for reconstitution, complies with the test for sterility prescribed in the monograph *Vaccines for veterinary use (0062)*.

3-3. **Residual live virus**. A test for residual live virus is carried out to confirm inactivation of avian infectious bursal disease type 1.

A. For vaccine prepared with embryo-adapted strains of virus, inject 2/5 of a dose into the allantoic cavity or onto the chorio-allantoic membrane of ten 9- to 11-day-old embryonated hen eggs from an SPF flock (*5.2.2*). Incubate the eggs and observe at least daily for 6 days. Pool separately the allantoic liquid or membranes from eggs containing live embryos, and that from eggs containing dead embryos, excluding those that die from non-specific causes within 24 h of the injection.

   Inject into the allantoic cavity or onto the chorio-allantoic membrane of each of ten 9- to 11-day-old SPF eggs 0.2 mL of the pooled allantoic liquid or crushed chorio-allantoic membranes from the live embryos and, into each of 10 similar eggs, 0.2 mL of the pooled liquid or membranes from the dead embryos and incubate for 6 days. Examine each embryo for lesions of avian infectious bursal disease. If more than 20 per cent of the embryos die at either stage repeat that stage.

   The vaccine complies with the test if there is no evidence of lesions of avian infectious bursal disease and if, in any repeat test, not more than 20 per cent of the embryos die from non-specific causes.

   Antibiotics may be used in the test to control extraneous bacterial infection.

B. For vaccine prepared with cell-culture-adapted strains of virus, inoculate 10 doses of the vaccine into suitable cell cultures. If the vaccine contains an oil adjuvant, eliminate it by suitable means. Incubate at 38 ± 1 °C for 7 days. Make a passage on another set of cell cultures and incubate at 38 ± 1 °C for 7 days.

   The vaccine complies with the test if the cultures show no signs of infection.

3-4. **Specified extraneous agents**. Use 10 chickens, 14-28 days old, from an SPF flock (*5.2.2*). Vaccinate each chicken by a recommended route with a double dose of the vaccine. After 3 weeks, administer 1 dose by the same route. Collect serum samples from each chicken 2 weeks later and carry out tests for antibodies against the following agents by the methods prescribed in general chapter *5.2.2. Chicken flocks free from specified pathogens for the production and quality control of vaccines*: avian encephalomyelitis virus, avian leucosis viruses, egg-drop syndrome virus, avian infectious bronchitis virus, avian infectious laryngotracheitis virus, influenza A virus, Marek's disease virus, Newcastle disease virus.

The vaccine complies with the test if it does not stimulate the formation of antibodies against these agents.

3-5. **Potency**. The vaccine complies with the requirements of the test mentioned under Immunogenicity (section 2-4-2) when administered by a recommended route and method.

4. LABELLING

The label states whether the strain in the vaccine is embryo-adapted or cell-culture-adapted.

04/2013:0587

AVIAN INFECTIOUS BURSAL DISEASE VACCINE (LIVE)

Vaccinum bursitidis infectivae aviariae vivum

1. DEFINITION

Avian infectious bursal disease vaccine (live) [Gumboro disease vaccine (live)] is a preparation of a suitable strain of infectious bursal disease virus type 1. This monograph applies to vaccines intended for administration to chickens for active immunisation; it applies to vaccines containing strains of low virulence but not to those containing strains of higher virulence that may be needed for disease control in certain epidemiological situations.

2. PRODUCTION

2-1. *PREPARATION OF THE VACCINE*

The vaccine virus is grown in embryonated hens' eggs or in cell cultures.

2-2. *SUBSTRATE FOR VIRUS PROPAGATION*

2-2-1. **Embryonated hens' eggs**. If the vaccine virus is grown in embryonated hens' eggs, they are obtained from flocks free from specified pathogens (SPF) (*5.2.2*).

Vaccines

2-2-2. **Cell cultures**. If the vaccine virus is grown in cell cultures, they comply with the requirements for cell cultures for production of veterinary vaccines (*5.2.4*).

2-3. *SEED LOTS*

2-3-1. **Extraneous agents**. The master seed lot complies with the tests for extraneous agents in seed lots (*2.6.24*). In these tests on the master seed lot, the organisms used are not more than 5 passages from the master seed lot at the start of the tests.

2-4. *CHOICE OF VACCINE VIRUS*

The vaccine virus shall be shown to be satisfactory with respect to safety (*5.2.6*) and efficacy (*5.2.7*) for the chickens for which it is intended.

The following tests for safety (section 2-4-1), damage to the bursa of Fabricius (section 2-4-2), immunosuppression (section 2-4-3), increase in virulence (section 2-4-4) and immunogenicity (section 2-4-5) may be used during the demonstration of safety and efficacy.

2-4-1. **Safety**. Carry out the test for each route and method of administration to be recommended for vaccination using in each case chickens not older than the minimum age to be recommended for vaccination and from an SPF flock (*5.2.2*). Use vaccine virus at the least attenuated passage level that will be present in a batch of the vaccine.

For each test performed in chickens younger than 3 weeks of age, use not fewer than 10 chickens. For each test performed in chickens older than 3 weeks of age, use not fewer than 8 chickens. Administer to each chicken a quantity of the vaccine virus equivalent to not less than 10 times the maximum virus titre likely to be contained in 1 dose of the vaccine. Observe the chickens at least daily for at least 14 days.

The test is not valid if more than 10 per cent of the chickens younger than 3 weeks of age show abnormal signs of disease or die from causes not attributable to the vaccine. For chickens older than 3 weeks of age, the test in not valid if non-specific mortality occurs.

The vaccine virus complies with the test if no chicken shows abnormal signs of disease or dies from causes attributable to the vaccine virus.

2-4-2. **Damage to the bursa of Fabricius**. Carry out the test for the route to be recommended for vaccination likely to be the least safe using chickens not older than the minimum age to be recommended for vaccination. Use virus at the least attenuated passage level that will be present between the master seed lot and a batch of the vaccine. Use not fewer than 20 chickens from an SPF flock (*5.2.2*). Administer to each chicken a quantity of the vaccine virus equivalent to 10 times the maximum titre likely to be contained in a dose of the vaccine. On each of days 7, 14, 21 and 28 after administration of the vaccine virus, euthanise not fewer than 5 chickens and prepare a section from the site with the greatest diameters of the bursa of Fabricius of each chicken. Carry out histological examination of the section and score the degree of bursal damage using the following scale.

0 No lesion, normal bursa.

1 1 per cent to 25 per cent of the follicles show lymphoid depletion (i.e., less than 50 per cent depletion in 1 affected follicle) influx of heterophils in lesions.

2 26 per cent to 50 per cent of the follicles show nearly complete lymphoid depletion (i.e., more than 75 per cent depletion in 1 affected follicle), affected follicles show necrosis and severe influx of heterophils may be detected.

3 51 per cent to 75 per cent of the follicles show lymphoid depletion; affected follicles show necrosis and severe influx of heterophils is detected.

4 76 per cent to 100 per cent of the follicles show nearly complete lymphoid depletion, hyperplasia and cyst structures are detected; affected follicles show necrosis and severe influx of heterophils is detected.

5 100 per cent of the follicles show nearly complete lymphoid depletion; complete loss of follicular structure, thickened and folded epithelium, fibrosis of bursal tissue.

Calculate the average score for each group of chickens. The vaccine virus complies with the test if:

- no chicken shows notable clinical signs of disease or dies from causes attributable to the vaccine virus,
- the average score for bursal damage 21 days after administration of the vaccine virus is less than or equal to 2.0 and 28 days after administration is less than or equal to 0.6,
- during the 21 days after administration a notable repopulation of the bursae by lymphocytes has taken place.

2-4-3. **Immunosuppression**. Carry out the tests for the route to be recommended for vaccination likely to be the least safe using chickens not older than the minimum age to be recommended for vaccination. Use vaccine virus at the least attenuated passage level that will be present between the master seed lot and a batch of the vaccine. Use not fewer than 30 chickens from an SPF flock (*5.2.2*). Divide them randomly into 3 groups each of not fewer than 10 and maintain the groups separately. Administer by eye-drop to each chicken of 1 group a quantity of the vaccine virus equivalent to not less than the maximum titre likely to be contained in 1 dose of the vaccine. At the time after administration when maximal bursal damage is likely to be present, as judged from the results obtained in the test for damage to the bursa of Fabricius (section 2-4-2), administer to each vaccinated chicken and to each chicken of another group 1 dose of Hitchner B1 strain Newcastle disease vaccine (live). Determine the seroresponse of each chicken of the 2 groups to the Newcastle disease virus 14 days after administration. Challenge each chicken of the 3 groups by the intramuscular route with not less than 10^5 EID_{50} of virulent Newcastle disease virus and note the degree of protection in the 2 groups vaccinated with Hitchner B1 strain Newcastle vaccine compared with the non-vaccinated group.

The test is not valid if 1 or more of the non-vaccinated chickens does not die within 7 days of challenge. The degree of immunosuppression is estimated from the comparative seroresponses and protection rates of the 2 Hitchner B1 vaccinated groups.

The vaccine complies with the test if there is no significant difference between the 2 groups.

2-4-4. **Increase in virulence**. Carry out the test according to general chapter *5.2.6* using chickens from an SPF flock (*5.2.2*) and not older than the minimum age to be recommended for vaccination. If the properties of the vaccine virus allow sequential passage through 5 groups via natural spreading, this method may be used, otherwise passage as described below is carried out.

Administer to each chicken of the 1st group by eye-drop a quantity of the vaccine virus that will allow recovery of virus for the passages described below. Prepare 3 to 4 days after administration a suspension from the bursa of Fabricius of each chicken and pool these samples. Administer 0.05 mL of the pooled samples by eye-drop to each chicken of the next group. Carry out this passage operation not fewer than 4 times; verify the presence of the virus at each passage. If the virus is not found at a passage level, repeat the passage by administration to a group of 10 chickens.

Carry out the test for damage to the bursa of Fabricius (section 2-4-2) using the material used for the 1st passage and the virus at the final passage. Administer the virus by the route to be recommended for vaccination likely to be the least safe.

The vaccine virus complies with the test if no indication of increasing virulence of the virus recovered for the final passage compared with the material used for the 1st passage is observed. If virus is not recovered after an initial passage in 5 chickens and a subsequent repeat passage in 10 chickens, the vaccine virus also complies with the test.

2-4-5. **Immunogenicity**. A test is carried out for each route and method of administration to be recommended using in each case chickens not older than the minimum age to be recommended for vaccination. The quantity of vaccine virus administered to each chicken is not greater than the minimum virus titre to be stated on the label and the virus is at the most attenuated passage level that will be present in a batch of the vaccine. Use not fewer than 30 chickens of the same origin and from an SPF flock (*5.2.2*). Vaccinate by a route to be recommended not fewer than 20 chickens. Maintain not fewer than 10 chickens as controls. Challenge each chicken after 14 days by eye-drop with a sufficient quantity of virulent avian infectious bursal disease virus. Observe the chickens at least daily for 10 days after challenge. Record the deaths due to infectious bursal disease and the surviving chickens that show clinical signs of disease. At the end of the observation period, euthanise all the surviving chickens and carry out histological examination for lesions of the bursa of Fabricius.

The test is not valid if one or more of the following applies:

- during the observation period following challenge, fewer than 50 per cent of the control chickens show characteristic signs of avian infectious bursal disease;
- 1 or more of the surviving control chickens does not show degree 3 lesions of the bursa of Fabricius;
- during the period between the vaccination and challenge more than 10 per cent of the vaccinated or control chickens show abnormal clinical signs or die from causes not attributable to the vaccine.

The vaccine virus complies with the test if during the observation period after challenge not fewer than 90 per cent of the vaccinated chickens survive and show no notable clinical signs of disease nor degree 3 lesions of the bursa of Fabricius.

3. BATCH TESTS

3-1. **Identification**. The vaccine, diluted if necessary and mixed with a monospecific infectious bursal disease virus type 1 antiserum, no longer infects embryonated hens' eggs from an SPF flock (*5.2.2*) or susceptible cell cultures (*5.2.4*) into which it is inoculated.

3-2. **Bacteria and fungi**. Vaccines intended for administration by injection comply with the test for sterility prescribed in the monograph *Vaccines for veterinary use (0062)*.

Frozen or freeze-dried vaccines produced in embryonated eggs and not intended for administration by injection either comply with the test for sterility prescribed in the monograph *Vaccines for veterinary use (0062)* or with the following test: carry out a quantitative test for bacterial and fungal contamination; carry out identification tests for microorganisms detected in the vaccine; the vaccine does not contain pathogenic microorganisms and contains not more than 1 non-pathogenic microorganism per dose.

Any diluent supplied for reconstitution of the vaccine complies with the test for sterility prescribed in the monograph *Vaccines for veterinary use (0062)*.

3-3. **Mycoplasmas**. The vaccine complies with the test for mycoplasmas (*2.6.7*).

3-4. **Extraneous agents**. The vaccine complies with the tests for extraneous agents in batches of finished product (*2.6.25*).

3-5. **Virus titre**. Titrate the vaccine virus by inoculation into embryonated hens' eggs from an SPF flock (*5.2.2*) or into suitable cell cultures (*5.2.4*). The vaccine complies with the test if 1 dose contains not less than the minimum virus titre stated on the label.

3-6. **Potency**. The vaccine complies with the requirements of the test prescribed under Immunogenicity (section 2-4-5) when administered by a recommended route and method. It is not necessary to carry out the potency test for each batch of the vaccine if it has been carried out on a representative batch using a vaccinating dose containing not more than the minimum virus titre stated on the label.

04/2013:0588

AVIAN INFECTIOUS ENCEPHALOMYELITIS VACCINE (LIVE)

Vaccinum encephalomyelitidis infectivae aviariae vivum

1. DEFINITION

Avian infectious encephalomyelitis vaccine (live) is a preparation of a suitable strain of avian encephalomyelitis virus. This monograph applies to vaccines intended for administration to non-laying breeder chickens to protect passively their future progeny and/or to prevent vertical transmission of virus via the egg.

2. PRODUCTION

2-1. *PREPARATION OF THE VACCINE*

The vaccine virus is grown in embryonated hens' eggs or in cell cultures.

2-2. *SUBSTRATE FOR VIRUS PROPAGATION*

2-2-1. **Embryonated hens' eggs**. If the vaccine virus is grown in embryonated hens' eggs, they are obtained from flocks free from specified pathogens (SPF) (*5.2.2*).

2-2-2. **Cell cultures**. If the vaccine virus is grown in cell cultures, they comply with the requirements for cell cultures for production of veterinary vaccines (*5.2.4*).

2-3. *SEED LOTS*

2-3-1. **Extraneous agents**. The master seed lot complies with the tests for extraneous agents in seed lots (*2.6.24*). In these tests on the master seed lot, the organisms used are not more than 5 passages from the master seed lot at the start of the tests.

2-4. *CHOICE OF VACCINE VIRUS*

The vaccine virus shall be shown to be satisfactory with respect to safety (*5.2.6*) and efficacy (*5.2.7*) for the chickens for which it is intended.

The following tests for safety (section 2-4-1), increase in virulence (section 2-4-2) and immunogenicity (section 2-4-3) may be used during the demonstration of safety and efficacy.

2-4-1. **Safety**. Carry out the test for each route and method of administration to be recommended for vaccination using in each case non-laying breeder chickens not older than the minimum age to be recommended for vaccination. Use vaccine virus at the least attenuated passage level that will be present in a batch of the vaccine.

For each test, use not fewer than 8 chickens from an SPF flock (*5.2.2*). Administer to each chicken a quantity of the vaccine virus equivalent to not less than 10 times the maximum virus titre likely to be contained in 1 dose of the vaccine. Observe the chickens at least daily for 21 days.

The test is not valid if non-specific mortality occurs.

The vaccine virus complies with the test if no chicken shows abnormal signs of disease or dies from causes attributable to the vaccine virus.

2-4-2. **Increase in virulence** Carry out the test according to general chapter *5.2.6* using 1-day-old chickens from an SPF flock (*5.2.2*). If the properties of the vaccine virus allow sequential passage through 5 groups via natural spreading, this method may be used, otherwise passage as described below is carried out.

Administer to each chicken of the 1st group by a route and method to be recommended a quantity of the vaccine virus that will allow recovery of virus for the passages described below. 5-7 days later, prepare a suspension from the brain of each chicken and pool these samples. Administer a suitable volume of the pooled samples by the oral route to each chicken of the next group. Carry out this passage operation not fewer than 4 times; verify the presence of the virus at each passage. If the virus is not found at a passage level, repeat the passage by administration to a group of 10 chickens.

If the 5th group of chickens shows no evidence of an increase in virulence indicative of reversion during the observation period, further testing is not required. Otherwise, carry out an additional safety test and compare the clinical signs and any relevant parameters in a group of at least 10 chickens receiving the material used for the 1st passage and another similar group receiving the virus at the final passage level.

The vaccine virus complies with the test if no indication of an increase in virulence of the virus recovered for the final passage compared with the material used for the 1st passage is observed. If virus is not recovered after an initial passage in 5 chickens and a subsequent repeat passage in 10 chickens, the vaccine virus also complies with the test.

2-4-3. **Immunogenicity**. If the vaccine is recommended for passive protection of future progeny carry out test 2-4-3-1. If the vaccine is recommended for prevention of vertical transmission of virus via the egg, carry out test 2-4-3-2. A test is carried out for each route and method of administration to be recommended, using in each case chickens from an SPF flock (*5.2.2*) not older than the minimum age to be recommended for vaccination. The quantity of the vaccine virus administered to each chicken is not greater than the minimum titre to be stated on the label and the virus is at the most attenuated passage level that will be present in a batch of the vaccine.

2-4-3-1. *Passive immunity in chickens*. Vaccinate not fewer than 20 breeder chickens from an SPF flock (*5.2.2*). Maintain separately not fewer than 10 breeder chickens of the same age and origin as controls. At the peak of lay, hatch not fewer than 25 chickens from eggs from vaccinated breeder chickens and 10 chickens from non-vaccinated breeder chickens. At 2 weeks of age, challenge each chicken by the intracerebral route with a sufficient quantity of virulent avian encephalomyelitis virus. Observe the chickens at least daily for 21 days after challenge. Record the deaths and the number of surviving chickens that show clinical signs of disease.

The test is not valid if:

- during the observation period after challenge fewer than 80 per cent of the control chickens die or show severe clinical signs of avian infectious encephalomyelitis,
- and/or during the period between the vaccination and challenge more than 15 per cent of control or vaccinated chickens show abnormal clinical signs or die from causes not attributable to the vaccine.

The vaccine virus complies with the test if during the observation period after challenge not fewer than 80 per cent of the progeny of vaccinated chickens survive and show no notable clinical signs of disease.

2-4-3-2. *Passive immunity in embryos*. Vaccinate not fewer than 20 breeder chickens from an SPF flock (*5.2.2*). Maintain separately not fewer than 10 breeder chickens of the same age and origin as controls. At the peak of lay, incubate not fewer than 36 eggs from the 2 groups, vaccinated and controls, and carry out an embryo sensitivity test. On the sixth day of incubation inoculate 100 EID_{50} of the Van Roekel strain of avian encephalomyelitis virus into the yolk sacs of the eggs. 12 days after inoculation examine the embryos for specific lesions of avian encephalomyelitis (muscular atrophy). Deaths during the first 24 h are considered to be non-specific.

The test is not valid if fewer than 80 per cent of the control embryos show lesions of avian encephalomyelitis. The test is not valid if fewer than 80 per cent of the embryos can be given an assessment.

The vaccine virus complies with the test if not fewer than 80 per cent of the embryos in the vaccinated group show no lesions of avian encephalomyelitis.

3. BATCH TESTS

3-1. **Identification**. The vaccine, diluted if necessary and mixed with a monospecific avian encephalomyelitis virus antiserum, no longer infects embryonated hens' eggs from an SPF flock (*5.2.2*) or susceptible cell cultures (*5.2.4*) into which it is inoculated.

3-2. **Bacteria and fungi**. Vaccines intended for administration by injection comply with the test for sterility prescribed in the monograph *Vaccines for veterinary use (0062)*.

Frozen or freeze-dried vaccines produced in embryonated eggs and not intended for administration by injection either comply with the test for sterility prescribed in the monograph *Vaccines for veterinary use (0062)* or with the following test: carry out a quantitative test for bacterial and fungal contamination; carry out identification tests for microorganisms detected in the vaccine; the vaccine does not contain pathogenic microorganisms and contains not more than 1 non-pathogenic microorganism per dose.

Any diluent supplied for reconstitution of the vaccine complies with the test for sterility prescribed in the monograph *Vaccines for veterinary use (0062)*.

3-3. **Mycoplasmas**. The vaccine complies with the test for mycoplasmas (*2.6.7*).

3-4. **Extraneous agents**. The vaccine complies with the tests for extraneous agents in batches of finished product (*2.6.25*).

3-5. **Virus titre**. Titrate the vaccine virus by inoculation into embryonated hens' eggs from an SPF flock (*5.2.2*) or into suitable cell cultures (*5.2.4*). The vaccine complies with the test if 1 dose contains not less than the minimum virus titre stated on the label.

3-6. **Potency**. Depending on the indications, the vaccine complies with the requirements of 1 or both of the tests prescribed under Immunogenicity (section 2-4-3-1, 2-4-3-2), when administered by a recommended route and method. It is not necessary to carry out the potency test for each batch of the vaccine if it has been carried out on a representative batch using a vaccinating dose containing not more than the minimum virus titre stated on the label.

04/2013:1068

AVIAN INFECTIOUS LARYNGOTRACHEITIS VACCINE (LIVE)

Vaccinum laryngotracheitidis infectivae aviariae vivum

1. DEFINITION

Avian infectious laryngotracheitis vaccine (live) is a preparation of a suitable strain of avian infectious laryngotracheitis virus (gallid herpesvirus 1). This monograph applies to vaccines intended for administration to chickens for active immunisation.

2. PRODUCTION

2-1. *PREPARATION OF THE VACCINE*

The vaccine virus is grown in embryonated hens' eggs or in cell cultures.

2-2. *SUBSTRATE FOR VIRUS PROPAGATION*

2-2-1. **Embryonated hens' eggs**. If the vaccine virus is grown in embryonated hens' eggs, they are obtained from flocks free from specified pathogens (SPF) (*5.2.2*).

2-2-2. **Cell cultures**. If the vaccine virus is grown in cell cultures, they comply with the requirements for cell cultures for production of veterinary vaccines (*5.2.4*).

2-3. *SEED LOTS*

2-3-1. **Extraneous agents**. The master seed lot complies with the tests for extraneous agents in seed lots (*2.6.24*). In these tests on the master seed lot, the organisms used are not more than 5 passages from the master seed lot at the start of the tests.

2-4. *CHOICE OF VACCINE VIRUS*

The vaccine virus shall be shown to be satisfactory with respect to safety (*5.2.6*) and efficacy (*5.2.7*) for the chickens for which it is intended.

The following tests for index of respiratory virulence (section 2-4-1), safety (section 2-4-2), increase in virulence (section 2-4-3) and immunogenicity (section 2-4-4) may be used during the demonstration of safety and efficacy.

2-4-1. **Index of respiratory virulence**. Use for the test not fewer than sixty 10-day-old chickens from an SPF flock (*5.2.2*). Divide them randomly into 3 groups, maintained separately. Prepare 2 tenfold serial dilutions starting from a suspension of the vaccine virus having a titre of 10^5 EID_{50} or 10^5 $CCID_{50}$ per 0.2 mL or, if not possible, having the maximum attainable titre. Use vaccine virus at the least attenuated passage level that will be present between the master seed lot and a batch of the vaccine. Allocate the undiluted virus suspension and the 2 virus dilutions each to a different group of chickens. Administer by the intratracheal route to each chicken 0.2 mL of the virus suspension attributed to its group. Observe the chickens for 10 days after administration and record the number of deaths. The index of respiratory virulence is the total number of deaths in the 3 groups divided by the total number of chickens. The vaccine virus complies with the test if its index of respiratory virulence is not greater than 0.33.

2-4-2. **Safety**. Carry out the test for each route and method of administration to be recommended for vaccination, using in each case chickens not older than the minimum age to be recommended for vaccination and from an SPF flock (*5.2.2*). Use vaccine virus at the least attenuated passage level that will be present in a batch of the vaccine. For each test performed in chickens younger than 3 weeks of age, use not fewer than 10 chickens. For each test performed in chickens older than 3 weeks of age, use not fewer than 8 chickens. Administer to each chicken a quantity of the vaccine virus equivalent to not less than 10 times the maximum virus titre likely to be contained in 1 dose of the vaccine. Observe the chickens at least daily for at least 14 days.

The test is not valid if more than 10 per cent of the chickens younger than 3 weeks of age show abnormal signs of disease or die from causes not attributable to the vaccine. For chickens older than 3 weeks of age, the test is not valid if non-specific mortality occurs.

The vaccine virus complies with the test if no chicken shows abnormal signs of disease or dies from causes attributable to the vaccine virus.

2-4-3. **Increase in virulence**. Carry out the test according to general chapter *5.2.6* using chickens not more than 2 weeks old, from an SPF flock (*5.2.2*). If the properties of the vaccine virus allow sequential passage through 5 groups via natural spreading, this method may be used, otherwise passage as described below is carried out.

Administer to each chicken of the 1st group by eye-drop a quantity of the vaccine virus that will allow recovery of virus for the passages described below. After the period shown to correspond to maximum replication of the virus, prepare a suspension from the mucosae of suitable parts of the respiratory tract of each chicken and pool these samples. Administer 0.05 mL of the pooled samples by eye-drop to each 2 week-old SPF chicken (*5.2.2*) of the next group. Carry out this passage operation not fewer than 4 times; verify the presence of the virus at each passage. If the virus is not found at a passage level, repeat the passage by administration to a group of 10 chickens. Determine the index of respiratory virulence (section 2-4-1) using the material used for the 1st passage and the virus at the final passage level; if the titre of the final passaged virus is less than 10^5 EID_{50} or 10^5 $CCID_{50}$, prepare the tenfold, serial dilutions using the highest titre available.

The vaccine virus complies with the test if no indication of an increase in virulence of the virus recovered for the final passage compared with the material used for the 1st passage is observed. If virus is not recovered after an initial passage in 5 chickens and a subsequent repeat passage in 10 chickens, the vaccine virus also complies with the test.

2-4-4. **Immunogenicity**. A test is carried out for each route and method of administration to be recommended for vaccination using in each case chickens not older than the minimum age to be recommended for vaccination. The quantity of the vaccine virus administered to each chicken is not greater than the minimum virus titre to be stated on the label and the virus is at the most attenuated passage level that will be present in a batch of the vaccine. Use for the test not fewer than 30 chickens of the same origin and from an SPF flock (*5.2.2*). Vaccinate by a route to be recommended not fewer than 20 chickens. Maintain not fewer than 10 chickens as controls. Challenge each chicken after 21 days by the intratracheal route with a sufficient quantity of virulent infectious laryngotracheitis virus. Observe the chickens at least daily for 7 days after challenge. Record the deaths and the number of surviving chickens that show clinical signs of disease. At the end of the observation period euthanise all the surviving chickens and carry out examination for macroscopic lesions: mucoid, haemorrhagic and pseudomembraneous inflammation of the trachea and orbital sinuses.

The test is not valid if:

- during the observation period after challenge fewer than 90 per cent of the control chickens die or show severe clinical signs of avian infectious laryngotracheitis or notable macroscopic lesions of the trachea and orbital sinuses;
- or if during the period between the vaccination and challenge more than 10 per cent of the vaccinated or control chickens show notable clinical signs of disease or die from causes not attributable to the vaccine.

The vaccine virus complies with the test if during the observation period after challenge not fewer than 90 per cent of the vaccinated chickens survive and show no notable clinical signs of disease and/or macroscopical lesions of the trachea and orbital sinuses.

3. BATCH TESTS

3-1. **Identification**. The vaccine, diluted if necessary and mixed with a monospecific infectious laryngotracheitis virus antiserum, no longer infects embryonated hens' eggs from an SPF flock (*5.2.2*) or susceptible cell cultures (*5.2.4*) into which it is inoculated.

3-2. **Bacteria and fungi**. Vaccines intended for administration by injection comply with the test for sterility prescribed in the monograph *Vaccines for veterinary use (0062)*.

Frozen or freeze-dried vaccines produced in embryonated eggs and not intended for administration by injection either comply with the test for sterility prescribed in the monograph *Vaccines for veterinary use (0062)* or with the following test: carry out a quantitative test for bacterial and fungal contamination; carry out identification tests for micro-organisms detected in the vaccine; the vaccine does not contain pathogenic micro-organisms and contains not more than 1 non-pathogenic micro-organism per dose.

Any diluent supplied for reconstitution of the vaccine complies with the test for sterility prescribed in the monograph *Vaccines for veterinary use (0062)*.

3-3. **Mycoplasmas**. The vaccine complies with the test for mycoplasmas (*2.6.7*).

3-4. **Extraneous agents**. The vaccine complies with the tests for extraneous agents in batches of finished product (*2.6.25*).

3-5. **Virus titre**. Titrate the vaccine virus by inoculation into embryonated hens' eggs from an SPF flock (*5.2.2*) or into suitable cell cultures (*5.2.4*). The vaccine complies with the test if 1 dose contains not less than the minimum titre stated on the label.

3-6. **Potency**. The vaccine complies with the requirements of the test prescribed under Immunogenicity (section 2-4-4) when administered according to the recommended schedule by a recommended route and method. It is not necessary to carry out the potency test for each batch of the vaccine if it has been carried out on a representative batch using a vaccinating dose containing not more than the minimum virus titre stated on the label.

04/2013:1392

Vaccines

AVIAN PARAMYXOVIRUS 3 VACCINE (INACTIVATED) FOR TURKEYS

Vaccinum paramyxoviris 3 aviarii inactivatum ad meleagrem

1. DEFINITION

Avian paramyxovirus 3 vaccine (inactivated) for turkeys is a preparation of a suitable strain of avian paramyxovirus 3, inactivated while maintaining adequate immunogenic properties. This monograph applies to vaccines intended for protection of turkeys against a drop in egg production and loss of egg quality.

2. PRODUCTION

2-1. *PREPARATION OF THE VACCINE*

The vaccine virus is propagated in embryonated eggs or in cell cultures. The vaccine may be adjuvanted.

2-2. *SUBSTRATE FOR VIRUS PROPAGATION*

2-2-1. **Embryonated eggs**. If the vaccine virus is grown in embryonated eggs, they are obtained from healthy flocks.

2-2-2. **Cell cultures**. If the vaccine virus is grown in cell cultures, they comply with the requirements for cell cultures for production of veterinary vaccines (*5.2.4*).

2-3. *SEED LOTS*

2-3-1. **Extraneous agents**. The master seed lot complies with the tests for extraneous agents in seed lots (*2.6.24*). In these tests on the master seed lot, the organisms used are not more than 5 passages from the master seed lot at the start of the test.

2-4. *CHOICE OF VACCINE COMPOSITION*

The vaccine is shown to be satisfactory with respect to safety (*5.2.6*) and efficacy (*5.2.7*) for each category of turkeys for which it is intended.
The following tests for safety (section 2-4-1) and immunogenicity (section 2-4-2) may be used during the demonstration of safety and efficacy.

2-4-1. **Safety**. The test is carried out for each route of administration to be recommended for vaccination. Use a batch of vaccine containing not less than the maximum potency that may be expected in a batch of vaccine.

For each test, use not fewer than 8 turkeys not older than the minimum age to be recommended for vaccination, that have not been vaccinated and that do not have antibodies against avian paramyxovirus 3. Administer by a recommended route and method to each turkey 1 dose of the vaccine. If the schedule to be recommended requires a 2nd dose, administer 1 dose to each turkey after an interval of at least 14 days. Observe the turkeys at least daily for at least 14 days after the last administration of the vaccine.

The test is not valid if non-specific mortality occurs. The vaccine complies with the test if no turkey shows abnormal signs of disease or dies from causes attributable to the vaccine.

2-4-2. **Immunogenicity**. A test is carried out for each route and method of administration to be recommended, using in each case turkeys of the minimum age to be recommended for vaccination. The vaccine administered to each turkey is of minimum potency.

Use for the test 2 groups each of not fewer than 20 turkeys that do not have antibodies against avian paramyxovirus 3. Vaccinate one group in accordance with the recommendations stated on the label. Maintain the other group as controls.

The test is not valid if serological tests carried out on serum samples obtained at the time of first vaccination show the presence of antibodies against avian paramyxovirus 3 in either vaccinates or controls or if tests carried out at the time of challenge show such antibodies in controls.

At the egg-production peak, challenge the 2 groups by the oculonasal route with a sufficient quantity of a virulent strain of avian paramyxovirus 3. For not less than 6 weeks after challenge, record the number of eggs laid weekly for each group, distinguishing between normal and abnormal eggs. The vaccine complies with the test if egg production and quality are significantly better in the vaccinated group than in the control group.

2-5. *MANUFACTURER'S TESTS*

2-5-1. **Residual live virus**. The test for residual live virus is carried out in embryonated eggs or suitable cell cultures (*5.2.4*), whichever is the most sensitive for the vaccine strain. The quantity of inactivated virus harvest used in the test is equivalent to not less than 10 doses of vaccine. The vaccine complies with the test if no live virus is detected.

2-5-2. **Batch potency test**. It is not necessary to carry out the potency test (section 3-5) for each batch of vaccine if it has been carried out using a batch of vaccine with a minimum potency. Where the test is not carried out, an alternative validated method is used, the criteria for acceptance being set with reference to a batch of vaccine that has given satisfactory results in the test described under Potency.

3. BATCH TESTS

3-1. **Identification**. When injected into animals that do not have antibodies against avian paramyxovirus 3, the vaccine stimulates the production of such antibodies.

3-2. **Bacteria and fungi**. The vaccine, including where applicable the diluent supplied for reconstitution, complies with the test for sterility prescribed in the monograph *Vaccines for veterinary use (0062)*.

3-3. **Residual live virus**. A test for residual live virus is carried out to confirm inactivation of avian paramyxovirus 3.

Inject 2/5 of a dose into the allantoic cavity of each of not fewer than 10 embryonated hen eggs 9-11 days old, from flocks free from specified pathogens (SPF) (*5.2.2*) and incubate. Observe for 6 days and pool separately the allantoic fluid from eggs containing live embryos, and that from eggs containing dead embryos, excluding those dying within 24 h of the injection. Examine embryos that die within 24 h of injection for the presence of avian paramyxovirus 3.

The vaccine does not comply with the test if avian paramyxovirus 3 is found.

Inject into the allantoic cavity of each of not fewer than ten 9- to 11-day-old fertilised hen eggs from an SPF flock (*5.2.2*), 0.2 mL of the pooled allantoic fluid from the live embryos and, into each of 10 similar eggs, 0.2 mL of the pooled fluid from the dead embryos, and incubate for 5-6 days. Test the allantoic fluid from each egg for the presence of haemagglutinins using chicken erythrocytes.

The vaccine complies with the test if there is no evidence of haemagglutinating activity and if not more than 20 per cent of the embryos die at either stage. If more than 20 per cent of the embryos die at one of the stages, repeat that stage; the vaccine complies with the test if there is no evidence of haemagglutinating activity and not more than 20 per cent of the embryos die at that stage.

Antibiotics may be used in the test to control extraneous bacterial infection.

3-4. **Specified extraneous agents**. Use 10 chickens, 14-28 days old, from an SPF flock (*5.2.2*). Vaccinate each chicken by a recommended route with a double dose of the vaccine. After 3 weeks, administer 1 dose by the same route. Collect serum samples from each chicken 2 weeks later and carry out tests for antibodies against the following agents by the methods prescribed in general chapter *5.2.2. Chicken flocks free from specified pathogens for the production and quality control of vaccines*: avian encephalomyelitis virus, avian infectious bronchitis virus, avian leucosis viruses, egg-drop syndrome virus, avian infectious bursal disease virus, avian infectious laryngotracheitis virus, influenza A virus, Marek's disease virus.

The vaccine complies with the test if it does not stimulate the formation of antibodies against these agents.

3-5. **Potency**. The vaccine complies with the requirements of the test mentioned under Immunogenicity (section 2-4-2) when administered by a recommended route and method.

04/2013:1956

AVIAN VIRAL TENOSYNOVITIS VACCINE (LIVE)

Vaccinum tenosynovitidis viralis aviariae vivum

1. DEFINITION

Avian viral tenosynovitis vaccine (live) is a preparation of a suitable strain of avian tenosynovitis virus (avian orthoreovirus). This monograph applies to vaccines intended for administration to chickens for active immunisation.

2. PRODUCTION

2-1. *PREPARATION OF THE VACCINE*

The vaccine virus is grown in cell cultures.

2-2. *SUBSTRATE FOR VIRUS PROPAGATION*

2-2-1. **Cell cultures**. Cell cultures comply with the requirements for cell cultures for production of veterinary vaccines (*5.2.4*).

2-3. *SEED LOTS*

2-3-1. **Extraneous agents**. The master seed lot complies with the tests for extraneous agents in seed lots (*2.6.24*). In these tests on the master seed lot, the organisms used are not more than 5 passages from the master seed lot at the start of the tests.

2-4. *CHOICE OF VACCINE VIRUS*

The vaccine virus shall be shown to be satisfactory with respect to safety (*5.2.6*) and efficacy (*5.2.7*) for the chickens for which it is intended.

The following tests for safety (section 2-4-1), increase in virulence (section 2-4-2) and immunogenicity (section 2-4-3) may be used during the demonstration of safety and efficacy.

2-4-1. **Safety**. Carry out the test for each route and method of administration to be recommended for vaccination using in each case chickens not older than the minimum age to be recommended for vaccination and from a flock free from specified pathogens (SPF) (*5.2.2*). Use vaccine virus at the least attenuated passage level that will be present in a batch of the vaccine.

For each test performed in chickens younger than 3 weeks of age, use not fewer than 10 chickens. For each test performed in chickens older than 3 weeks of age, use not fewer than 8 chickens. Administer to each chicken a quantity of the vaccine virus equivalent to not less than 10 times the maximum virus titre likely to be contained in 1 dose of the vaccine. Observe the chickens at least daily for at least 21 days. Carry out histological examination of the joints and tendon sheaths of the legs and feet at the end of the observation period (as a basis for comparison in the test for increase in virulence).

The test is not valid if more than 10 per cent of the chickens younger than 3 weeks of age show abnormal signs of disease or die from causes not attributable to the vaccine virus. For chickens older than 3 weeks of age, the test is not valid if non-specific mortality occurs.

The vaccine virus complies with the test if no chicken shows abnormal signs of disease or dies from causes attributable to the vaccine.

2-4-2. **Increase in virulence**. Carry out the test according to general chapter *5.2.6* using 1-day-old chickens from an SPF flock (*5.2.2*). If the properties of the vaccine virus allow sequential passage through 5 groups via natural spreading, this method may be used, otherwise passage as described below is carried out.

Administer to each chicken of the 1st group by a suitable route a quantity of the vaccine virus that will allow recovery of virus for the passages described below. Euthanise the chickens at the moment when the virus concentration in the most suitable material (for example, tendons, tendon sheaths and liquid exudates from the hock joints, spleen) is sufficient. Prepare a suspension from this material from each chicken and pool these samples. Administer 0.1 mL of the pooled samples by the route of administration most likely to lead to increase in virulence to each chicken of the next group. Carry out this passage operation not fewer than 4 times; verify the presence of the virus at each passage. If the virus is not found at a passage level, repeat the passage by administration to a group of 10 chickens.

If the 5th group of chickens shows no evidence of an increase in virulence indicative of reversion during the observation period, further testing is not required. Otherwise, carry out an additional safety test and compare the clinical signs and any relevant parameters in a group of at least 10 chickens receiving the material used for the 1st passage and another similar group receiving the virus at the final passage level.

The vaccine virus complies with the test if no indication of an increase in virulence of the virus at the final passage level compared with the material used for the 1st passage is observed. If the virus is not recovered after an initial passage in 5 chickens and a subsequent repeat passage in 10 chickens, the vaccine virus also complies with the test.

2-4-3. **Immunogenicity**. A test is carried out for each route and method of administration to be recommended for vaccination using in each case chickens not older than the minimum age to be recommended for vaccination. The quantity of the vaccine virus administered to each chicken is not greater than the minimum virus titre to be stated on the label and the virus is at the most attenuated passage level that will be present in a batch of the vaccine. Use not fewer than 30 chickens of the same origin and from an SPF flock (*5.2.2*). Administer the vaccine by a route to be recommended to not fewer than 20 chickens. Maintain not fewer than 10 chickens as controls. Challenge each chicken after 21 days by a suitable route with a sufficient quantity of virulent avian tenosynovitis virus. Observe the chickens at least daily for 21 days after challenge. Record the deaths and the surviving chickens that show clinical signs of disease. If the challenge is administered by the foot pad, any transient swelling of the foot pad during the first 5 days after challenge may be considered non-specific. At the end of the observation period, euthanise all the surviving chickens and carry out macroscopic and/or microscopic examination for lesions of the joints and tendon sheaths of the legs and feet, e.g. exudate and swelling.

The test is not valid if:

- during the observation period after challenge fewer than 80 per cent of the control chickens die or show severe clinical signs of avian viral tenosynovitis or show macroscopical and/or microscopical lesions in the joints and tendon sheaths of the legs and feet,
- or if during the period between vaccination and challenge more than 10 per cent of the control or vaccinated chickens show abnormal clinical signs or die from causes not attributable to the vaccine.

The vaccine virus complies with the test if during the observation period after challenge not fewer than 90 per cent of the vaccinated chickens survive and show no notable clinical signs of disease or show macroscopical and/or microscopical lesions in the joints and tendon sheaths of the legs and feet.

3. BATCH TESTS

3-1. **Identification**. Carry out an immunostaining test in cell cultures to identify the vaccine virus.

3-2. **Bacteria and fungi**. Vaccines intended for administration by injection comply with the test for sterility prescribed in the monograph *Vaccines for veterinary use (0062)*.

Frozen or freeze-dried vaccines produced in embryonated eggs and not intended for administration by injection either comply with the test for sterility prescribed in the monograph *Vaccines for veterinary use (0062)* or with the following test: carry out a quantitative test for bacterial and fungal contamination; carry out identification tests for microorganisms detected in the vaccine; the vaccine does not contain pathogenic microorganisms and contains not more than 1 non-pathogenic microorganism per dose.

Any diluent supplied for reconstitution of the vaccine complies with the test for sterility prescribed in the monograph *Vaccines for veterinary use (0062)*.

3-3. **Mycoplasmas**. The vaccine complies with the test for mycoplasmas (*2.6.7*).

3-4. **Extraneous agents**. The vaccine complies with the tests for extraneous agents in batches of finished product (*2.6.25*).

3-5. **Virus titre**. Titrate the vaccine virus by inoculation into suitable cell cultures (*5.2.4*). The vaccine complies with the test if 1 dose contains not less than the minimum virus titre stated on the label.

3-6. **Potency**. The vaccine complies with the requirements of the test prescribed under Immunogenicity (section 2-4-3) when administered by a recommended route and method. It is not necessary to carry out the potency test for each batch of the vaccine if it has been carried out on a representative batch using a vaccinating dose containing not more than the minimum virus titre stated on the label.

04/2013:2525

BORDETELLA BRONCHISEPTICA VACCINE (LIVE) FOR DOGS

Vaccinum Bordetellae bronchisepticae vivum ad canem

1. DEFINITION

Bordetella bronchiseptica vaccine (live) for dogs is a preparation of a suitable strain of *Bordetella bronchiseptica*. This monograph applies to vaccines intended for the active immunisation of dogs against respiratory disease caused by *B. bronchiseptica*.

2. PRODUCTION

2-1. *PREPARATION OF THE VACCINE*

The vaccine strain is grown in a suitable medium.

2-2. *CHOICE OF VACCINE COMPOSITION*

The vaccine strain is shown to be satisfactory with respect to safety (*5.2.6*) and efficacy (*5.2.7*) for the dogs for which it is intended.

The following tests for safety (section 2-2-1), excretion and transmission of the vaccine strain (section 2-2-2), increase in virulence (section 2-2-3) and immunogenicity (section 2-2-4) may be used during the demonstration of safety and efficacy.

2-2-1. **Safety**. Carry out the test for each route and method of administration to be recommended for vaccination using in each case dogs not older than the minimum age to be recommended for vaccination. The vaccine strain to be administered is at the least attenuated passage level that will be present in a batch of the vaccine.

For each test, use not fewer than 8 dogs, shown to be free from *B. bronchiseptica* and that do not have antibodies against *B. bronchiseptica*. Administer to each dog a quantity of the vaccine strain equivalent to not less than 10 times the maximum number of live bacteria likely to be contained in 1 dose of the vaccine. Observe the dogs at least daily for at least 14 days.

The vaccine strain complies with the test if no dog shows abnormal local or systemic reactions or dies from causes attributable to the vaccine strain.

2-2-2. **Excretion and transmission of the vaccine strain**. Use dogs not older than 10 weeks of age. Administer the strain by the route to be recommended for vaccination most likely to lead to excretion. The vaccine strain to be administered is at the least attenuated passage level that will be present in a batch of the vaccine.

For each test, use not fewer than 8 dogs, shown to be free from *B. bronchiseptica* and that do not have antibodies against *B. bronchiseptica*. Administer to not fewer than 4 dogs a quantity of the vaccine strain equivalent to not less than the maximum number of live bacteria likely to be contained in 1 dose of the vaccine. 2 days after vaccination add 4 dogs to the group of vaccinated dogs. Observe the animals for 70 days. Collect nasal swabs or washings from each dog at weekly intervals. Verify the presence of the excreted vaccine strain with a suitable method.

The vaccine strain complies with the test if no dog shows abnormal local or systemic reactions or dies from causes attributable to the vaccine strain.

The results are noted and used to formulate the label statement (whether the vaccinated strain is excreted, the period over which there is excretion and whether or not the vaccine strain spreads to in-contact dogs).

2-2-3. **Increase in virulence**. Carry out the test according to general chapter *5.2.6* using dogs not older than 10 weeks of age, which are free from *B. bronchiseptica* and that do not have antibodies against *B. bronchiseptica*. If the properties of the vaccine strain allow sequential passage through 5 groups via natural spreading, this method may be used, otherwise passage as described below is carried out.

Administer to each dog by a route to be recommended a quantity of the vaccine strain that will allow recovery of bacteria for the passages described below. Administer the strain by the route to be recommended for vaccination most likely to lead to reversion to virulence. On one occasion between 4 and 6 days after administration, collect nasal swabs or washings from each dog, verify the presence of bacteria and pool positive samples. Administer 1 mL of the pooled samples by a suitable route (for example, the intranasal route) to each dog of the next group. Carry out this passage operation not fewer than 4 times; verify the presence of the bacteria at each passage. If the bacteria are not found at a passage level, repeat the passage by administration to a group of 10 animals.

If the 5th group of animals shows no evidence of an increase in virulence indicative of reversion during the observation period, further testing is not required. Otherwise, carry out an additional safety test and compare the clinical signs and any relevant parameters in a group of at least 8 animals receiving the material used for the 1st passage and another similar group receiving the bacteria at the final passage level.

The vaccine strain complies with the test if no indication of increased virulence of the bacteria recovered for the final passage compared with the material used for the 1st passage is observed. If bacteria are not recovered after an initial passage in 2 animals and a subsequent repeat passage in 10 animals, the vaccine strain also complies with the test.

2-2-4. **Immunogenicity**. A test is carried out for each route and method of administration to be recommended for vaccination using in each case dogs of the minimum age to be recommended. The quantity of vaccine strain to be administered to each dog is not greater than the minimum number of live bacteria to be stated on the label and the strain is at the most attenuated passage level that will be present in a batch of vaccine.

Use for the test not fewer than 15 dogs which are free from *B. bronchiseptica* and that do not have antibodies against *B. bronchiseptica*. Vaccinate not fewer than 10 dogs, according to the schedule to be recommended. Maintain not fewer than 5 dogs as controls. Challenge each dog after 20-22 days by the intranasal route with a quantity of a suspension of virulent *B. bronchiseptica* sufficient to cause typical signs of respiratory disease in a dog that does not have antibodies against *B. bronchiseptica*. Observe the dogs at least daily for 14 days after challenge. Collect nasal swabs or washings from each dog daily from day 2 to 14 after challenge and determine the number of excreted *B. bronchiseptica* in each sample. Use a scoring system to record the signs of respiratory disease in each dog.

The test is invalid if more than 20 per cent of the controls show no typical signs of the disease.

The vaccine complies with the test if there is a significant decrease in the score for respiratory signs and in the number of *B. bronchiseptica* excreted in vaccinates compared to controls.

3. BATCH TESTS

3-1. **Identification**. The vaccine strain is identified by suitable methods.

3-2. **Bacteria and fungi**. Carry out the test by inoculation of suitable media. The vaccine complies with the test if it does not contain extraneous micro-organisms. Any diluent supplied for reconstitution of the vaccine complies with the test for sterility prescribed in the monograph *Vaccines for veterinary use (0062)*.

3-3. **Live bacteria**. Make a count of live bacteria on a solid medium suitable for the culture of *B. bronchiseptica*. The vaccine complies with the test if 1 dose contains not less than the minimum number of live *B. bronchiseptica* stated on the label.

3-4. **Potency**. The vaccine complies with the requirements of the test prescribed under Immunogenicity (section 2-2-4) when administered by a recommended route and method. It is not necessary to carry out the potency test for each batch of the vaccine if it has been carried out on a representative batch using a vaccinating dose containing not more than the minimum number of live *B. bronchiseptica* stated on the label.

4. LABELLING

The label states:

- where applicable, the period after vaccination during which the vaccine is excreted;
- where applicable, that the vaccine strain may be transmitted to other dogs.

04/2013:1939

BOVINE LEPTOSPIROSIS VACCINE (INACTIVATED)

Vaccinum leptospirosis bovinae inactivatum

1. DEFINITION

Bovine leptospirosis vaccine (inactivated) is a preparation of inactivated whole organisms and/or antigenic extract(s) of one or more suitable strains of one or more of *Leptospira borgpetersenii* serovar hardjo, *Leptospira interrogans* serovar hardjo or other *L. interrogans* serovars, inactivated while maintaining adequate immunogenic properties. This monograph applies to vaccines intended for the active immunisation of cattle against leptospirosis.

2. PRODUCTION

2-1. *PREPARATION OF THE VACCINE*

The seed material is cultured in a suitable medium; each strain is cultivated separately. During production, various parameters such as growth rate are monitored by suitable methods; the values are within the limits approved for the particular product. Purity and identity are verified on the harvest using suitable methods. After cultivation, the bacterial harvest is inactivated by a suitable method. The antigen may be concentrated. The vaccine may be adjuvanted.

2-2. *CHOICE OF VACCINE COMPOSITION*

The vaccine is shown to be satisfactory with respect to safety (*5.2.6*) and efficacy (*5.2.7*) for the cattle for which it is intended.

The following tests for safety (section 2-2-1) and immunogenicity (section 2-2-2) may be used during the demonstration of safety and efficacy.

2-2-1. **Safety**

2-2-1-1. *Laboratory tests*. Carry out the test for each route and method of administration to be recommended for vaccination and in cattle of each category for which the vaccine is intended (for example, young calves, pregnant cattle). Use a batch of vaccine containing not less than the maximum potency that may be expected in a batch of vaccine.

For each test, use not fewer than 8 cattle that do not have antibodies against *L. borgpetersenii* serovar hardjo and the principal serovars of *L. interrogans* (icterohaemorrhagiae, canicola, grippotyphosa, sejroe, hardjo, hebdomonadis, pomona, australis and autumnalis). Administer to each animal 1 dose of the vaccine. If the schedule to be recommended requires a 2nd dose, administer another dose after an interval of at least 14 days. Observe the cattle at least daily for at

Vaccines

least 14 days after the last administration. Record body temperatures the day before each vaccination, at vaccination, 4 h later and daily for 4 days.

The vaccine complies with the test if no animal shows abnormal local or systemic reactions, signs of disease, or dies from causes attributable to the vaccine.

2-2-1-2. *Field studies*. The cattle used for the field trials are also used to evaluate safety. Use not fewer than 3 groups of 20 cattle with corresponding groups of not fewer than 10 controls in 3 different locations. Examine the injection sites for local reactions after vaccination. Record body temperatures the day before vaccination, at vaccination and on the 2 days following vaccination.

The vaccine complies with the test if no animal shows notable signs of disease or dies from causes attributable to the vaccine. In addition, if the vaccine is for use in pregnant cattle, no adverse effects on the pregnancy and offspring are noted.

2-2-2. **Immunogenicity**. Carry out a separate test for each of the serovars for which a claim is made for a beneficial effect on the rates of infection and urinary excretion. If claims are to be made for protection against reproductive or production losses, further specific studies will be required.

Each test is carried out for each route and method of administration to be recommended, using in each case cattle of the minimum age to be recommended for vaccination. The vaccine administered to each animal is of minimum potency.

2-2-2-1. *Immunogenicity against L. borgpetersenii serovar hardjo*. Use not fewer than 15 cattle that do not have antibodies against *L. borgpetersenii* serovar hardjo and the principal serovars of *L. interrogans* (icterohaemorrhagiae, canicola, grippotyphosa, sejroe, hardjo, hebdomonadis, pomona, australis and autumnalis). Vaccinate not fewer than 10 cattle according to the schedule to be recommended. Maintain not fewer than 5 cattle as controls. 20-22 days after the last vaccination, challenge all the cattle by a suitable mucosal route with a sufficient quantity of a virulent strain of the relevant serovar. Observe the cattle at least daily for a further 35 days. Collect urine samples from each animal on days 0, 14, 21, 28 and 35 post-challenge. Euthanise surviving cattle at the end of the observation period. Carry out post-mortem examination on any animal that dies and on those euthanised at the end of the observation period. In particular, examine the kidneys for macroscopic and microscopic signs of leptospira infection. A sample of each kidney is collected and each urine and kidney sample is tested for the presence of the challenge organisms by re-isolation or by another suitable method.

For the test conducted with *L. borgpetersenii* serovar hardjo, control cattle are regarded as infected if the challenge organisms are re-isolated from at least 2 samples. The test is not valid if infection has been established in fewer than 80 per cent of the control cattle.

The vaccine complies with the test if the challenge organisms are re-isolated from any urine or kidney sample from not more than 20 per cent of the vaccinated cattle.

2-2-2-2. *Immunogenicity against other leptospira species*. For leptospiral species other than *L. borgpetersenii* serovar hardjo, the test is conducted as described in section 2-2-2-1 but urine samples are collected on appropriate days, determined by the characteristics of the challenge model. In the case of serovars for which there is published evidence that the serovar has a lower tropism for the urinary tract, a lower rate of infection may be justified. Depending on their tissue tropism, for some leptospira serovars, samples from other tissues/body fluids can be used to establish whether the cattle are infected or not by the challenge organism.

2-3. *MANUFACTURER'S TESTS*

2-3-1. **Batch potency test**. It is not necessary to carry out the potency test (section 3-4) for each batch of vaccine if it has been carried out using a batch of vaccine with a minimum potency. Where the test is not carried out, an alternative validated method is used, the criteria for acceptance being set with reference to a batch of vaccine that has given satisfactory results in the test described under Potency. The following test may be used.

For each of the serovars for which protection is claimed, the antibody response from vaccinated animals is measured. Use not fewer than 12 guinea-pigs weighing 250-350 g that do not have antibodies against *L. borgpetersenii* serovar hardjo and the principal serovars of *L. interrogans* (icterohaemorrhagiae, canicola, grippotyphosa, sejroe, hardjo, hebdomonadis, pomona, australis and autumnalis) and that have been obtained from a regularly tested and certified leptospira-free source. The dose to be administered to the guinea-pigs is that fraction of a cattle dose which has been shown in the validation studies to provide a suitably sensitive test. Vaccinate each of 10 guinea-pigs with the suitable dose. Maintain not fewer than 2 guinea-pigs as controls. At a given interval within the range of 19-23 days after the injection, collect blood from each guinea-pig and prepare serum samples. Use a suitable validated method such as a micro-agglutination test to measure the antibodies in each sample.

The vaccine complies with the test if antibody levels are equal to or greater than those obtained with a batch that has given satisfactory results in the test described under Potency and there is no significant increase in antibody titre in the controls.

3. BATCH TESTS

3-1. **Identification**. When injected into healthy animals that do not have specific antibodies against the leptospira serovar(s) present in the vaccine, the vaccine stimulates the production of such antibodies.

3-2. **Bacteria and fungi**. The vaccine, including where applicable the diluent supplied for reconstitution, complies with the test for sterility prescribed in the monograph *Vaccines for veterinary use (0062)*.

3-3. **Residual live bacteria**. Carry out a test for live leptospirae by inoculation of a specific medium. Inoculate 1 mL of the vaccine into 100 mL of the medium. Incubate at 30 °C for 14 days, subculture into a further quantity of the medium and incubate both media at 30 °C for 14 days: the vaccine complies with the test if no growth occurs in either medium. At the same time, carry out a control test by inoculating a further quantity of the medium with the vaccine together with a quantity of a culture containing approximately 100 leptospirae and incubating at 30 °C: the test is not valid if growth of leptospirae does not occur within 14 days.

3-4. **Potency**. The vaccine complies with the requirements of the test mentioned under Immunogenicity (section 2-2-2) when administered by a recommended route and method.

04/2013:1176

BOVINE PARAINFLUENZA VIRUS VACCINE (LIVE)

Vaccinum viri parainfluenzae bovini vivum

1. DEFINITION

Bovine parainfluenza virus vaccine (live) is a preparation of a suitable strain of bovine parainfluenza 3 virus. This monograph applies to vaccines intended for the active immunisation of cattle against infection with bovine parainfluenza virus.

2. PRODUCTION

2-1. *PREPARATION OF THE VACCINE*

The vaccine virus is grown in cell cultures.

2-2. *SUBSTRATE FOR VIRUS PROPAGATION*

2-2-1. **Cell cultures**. The cell cultures comply with the requirements for cell cultures for production of veterinary vaccines (*5.2.4*).

2-3. *CHOICE OF VACCINE VIRUS*

The vaccine virus is shown to be satisfactory with respect to safety (*5.2.6*) and efficacy (*5.2.7*) for the cattle for which it is intended.

The following tests for safety (section 2-3-1), increase in virulence (section 2-3-2) and immunogenicity (2-3-3) may be used during the demonstration of safety and efficacy.

2-3-1. **Safety**. Carry out the test for each route and method of administration to be recommended for vaccination. Use vaccine virus at the least attenuated passage level that will be present in a batch of the vaccine.

For each test, use not fewer than 5 calves of the minimum age to be recommended for vaccination and preferably that do not have antibodies against bovine parainfluenza 3 virus or, where justified, use calves with a very low level of such antibodies as long as they have not been vaccinated against bovine parainfluenza virus and administration of the vaccine does not cause an anamnestic response. Administer to each calf a quantity of the vaccine virus equivalent to not less than 10 times the maximum virus titre likely to be contained in 1 dose of the vaccine. Observe the calves at least daily for at least 14 days. Measure the body temperature of each calf on the day before vaccination, at the time of vaccination and for the 4 subsequent days.

The vaccine virus complies with the test if no abnormal effect on body temperature occurs and if no calf shows abnormal, local or systemic reactions or dies from causes attributable to the vaccine virus.

2-3-2. **Increase in virulence**. Carry out the test according to chapter *5.2.6. Evaluation of safety of veterinary vaccines and immunosera*, using calves that do not have antibodies against bovine parainfluenza 3 virus. If the properties of the vaccine virus allow sequential passage through 5 groups via natural spreading, this method may be used, otherwise passage as described below is carried out.

Administer to each calf of the 1st group by the intranasal route a quantity of the vaccine virus that will allow recovery of virus for the passages described below. On each of days 3 to 7 after administration of the virus, take nasal swabs from each calf and collect in not more than 5 mL of a suitable medium, which is then used to inoculate cell cultures to verify the presence of virus. Administer about 1 mL of the suspension from the swabs that contain the maximum amount of virus, as indicated by the titration of cell cultures, to each calf of the next group. Carry out this passage operation not fewer than 4 times; verify the presence of the virus at each passage. If the virus is not found at a passage level, repeat the passage by administration to a group of 10 animals.

If the 5th group of animals shows no evidence of an increase in virulence indicative of reversion during the observation period, further testing is not required. Otherwise, carry out an additional safety test and compare the clinical signs and any relevant parameters in a group of at least 8 animals receiving the material used for the 1st passage and another similar group receiving the virus at the final passage.

The vaccine virus complies with the test if no indication of increased virulence of the virus recovered for the final passage compared with the material used for the 1st passage is observed; account is taken of the titre of excreted virus in the nasal swabs. If virus is not recovered after an initial passage in 2 animals and a subsequent repeated passage in 10 animals, the vaccine virus also complies with the test.

2-3-3. **Immunogenicity**. A test is carried out for each route and method of administration to be recommended for vaccination using in each case calves of the minimum age to be recommended. The quantity of vaccine to be administered to each calf is not greater than the minimum virus titre to be stated on the label and the virus is at the most attenuated passage level that will be present in a batch of vaccine.

Use for the test not fewer than 10 calves that do not have antibodies against bovine parainfluenza 3 virus; calves having low levels of such antibodies may be used if it has been demonstrated that valid results are obtained in these conditions. Collect sera from the calves before vaccination, 7 days and 14 days after the time of vaccination and just before challenge. Vaccinate not fewer than 5 calves, according to the schedule to be recommended. Maintain not fewer than 5 calves as controls. Challenge each calf after 20-22 days by a respiratory tract route with a sufficient quantity of a suspension of a low-passage virulent bovine parainfluenza 3 virus. Observe the calves at least daily for 14 days after challenge and monitor each of them for signs, in particular respiratory signs and virus shedding (by nasal swabs or tracheobronchial washing).

The test is not valid if tests for antibodies against bovine parainfluenza 3 virus on the sera indicate that there was intercurrent infection with the virus during the test or if, during the observation period after challenge, more than 2 of the 5 control calves show no excretion of the challenge virus, as shown by nasal swabs or samples harvested by tracheobronchial washing.

The vaccine virus complies with the test if, during the observation period after challenge, in vaccinated calves compared to controls there is a significant reduction in mean titre and in mean duration of virus excretion, and a notable reduction in general and local signs (if the challenge virus used produces such signs).

3. BATCH TESTS

3-1. **Identification**. Carry out an immunostaining test in suitable cell cultures, using a monospecific antiserum.

3-2. **Bacteria and fungi**. The vaccine, including where applicable the diluent supplied for reconstitution, complies with the test for sterility prescribed in the monograph *Vaccines for veterinary use (0062)*.

3-3. **Mycoplasmas** (*2.6.7*). The vaccine complies with the test for mycoplasmas.

3-4. **Extraneous agents**. Neutralise the vaccine virus with a suitable monospecific antiserum against bovine parainfluenza 3 virus and inoculate into cell cultures known for their susceptibility to viruses pathogenic for cattle. Carry out at least 1 passage and maintain the cultures for 14 days.

The vaccine complies with the test if no cytopathic effect develops and there is no sign of the presence of haemadsorbing agents. Carry out a specific test for pestiviruses.

3-5. **Virus titre**. Titrate the vaccine virus in suitable cell cultures. The vaccine complies with the test if 1 dose contains not less than the minimum virus titre stated on the label.

3-6. **Potency**. The vaccine complies with the requirements of the test prescribed under Immunogenicity (section 2-3-3) when administered by a recommended route and method. It is not necessary to carry out the potency test for each batch of the vaccine if it has been carried out on a representative batch using a vaccinating dose containing not more than the minimum virus titre stated on the label.

04/2013:1177

BOVINE RESPIRATORY SYNCYTIAL VIRUS VACCINE (LIVE)

Vaccinum viri syncytialis meatus spiritus bovini vivum

1. DEFINITION

Bovine respiratory syncytial virus vaccine (live) is a preparation of a suitable strain of bovine respiratory syncytial virus. This monograph applies to vaccines intended for the active immunisation of cattle against infection with bovine respiratory syncytial virus.

2. PRODUCTION

2-1. *PREPARATION OF THE VACCINE*

The vaccine virus is grown in cell cultures.

2-2. *SUBSTRATE FOR VIRUS PROPAGATION*

2-2-1. **Cell cultures**. The cell cultures comply with the requirements for cell cultures for production of veterinary vaccines (*5.2.4*).

2-3. *CHOICE OF VACCINE VIRUS*

The vaccine virus is shown to be satisfactory with respect to safety (*5.2.6*) and efficacy (*5.2.7*) for the cattle for which it is intended.

The following tests for safety (section 2-3-1), increase in virulence (section 2-3-2) and immunogenicity (section 2-3-3) may be used during the demonstration of safety and efficacy.

2-3-1. **Safety**. Carry out the test for each route and method of administration to be recommended for vaccination, using in each case calves of the minimum age to be recommended for vaccination. Use vaccine virus at the least attenuated passage level that will be present in a batch of the vaccine.

2-3-1-1. *Laboratory test*. For each test, use not fewer than 5 calves that do not have antibodies against bovine respiratory syncytial virus. Administer to each calf a quantity of the vaccine virus equivalent to not less than 10 times the maximum virus titre likely to be contained in 1 dose of the vaccine. Observe the calves at least daily for at least 14 days. Measure the body temperature of each calf on the day before vaccination, at the time of vaccination and daily for the following 7 days.

The vaccine virus complies with the test if no abnormal effect on body temperature occurs and if no calf shows abnormal local or systemic reactions or dies from causes attributable to the vaccine virus.

2-3-1-2. *Field studies*. The calves used for the field trials are also used to evaluate the incidence of hypersensitivity reactions in vaccinated calves following subsequent exposure to the vaccine or to wild virus. The vaccine complies with the test if it is not associated with an abnormal incidence of immediate hypersensitivity reactions.

2-3-2. **Increase in virulence**. Carry out the test according to chapter *5.2.6. Evaluation of safety of veterinary vaccines and immunosera*, using calves that do not have antibodies against bovine respiratory syncytial virus. If the properties of the vaccine virus allow sequential passage through 5 groups via natural spreading, this method may be used, otherwise passage as described below is carried out.

Administer to each calf of the 1st group by the intranasal route a quantity of the vaccine virus that will allow recovery of virus for the passages described below. On each of days 3 to 7 after administration of the virus, take nasal swabs from each calf and collect in not more than 5 mL of a suitable medium, which is then used to inoculate cell cultures to verify the presence of virus. Administer about 1 mL of the suspension from the swabs that contain the maximum amount of virus, as indicated by the titration of cell cultures, to each calf of the next group. Carry out this passage operation not fewer than 4 times; verify the presence of the virus at each passage. If the virus is not found at a passage level, repeat the passage by administration to a group of 10 animals.

If the 5th group of calves shows no evidence of an increase in virulence indicative of reversion during the observation period, further testing is not required. Otherwise, carry out an additional safety test and compare the clinical signs and any relevant parameters in a group of at least 8 animals receiving the material used for the 1st passage and another similar group receiving the virus at the final passage level.

The vaccine virus complies with the test if no calf shows signs attributable to the vaccine virus and no indication of increased virulence of the virus recovered for the final passage compared with the material used for the 1st passage is observed; account is taken of the titre of excreted virus in the nasal swabs. If virus is not recovered after an initial passage in 2 animals and a subsequent repeated passage in 10 animals, the vaccine virus also complies with the test.

2-3-3. **Immunogenicity**. A test is carried out for each route and method of administration to be recommended for vaccination using in each case calves of the minimum age to be recommended. The quantity of vaccine to be administered to each calf is not greater than the minimum virus titre to be stated on the label and the virus is at the most attenuated passage level that will be present in a batch of vaccine.

Use for the test not fewer than 10 calves that do not have antibodies against bovine respiratory syncytial virus. Collect sera from the calves before the time of vaccination, 7 and 14 days after the time of vaccination and just before challenge. Vaccinate not fewer than 5 calves, according to the schedule to be recommended. Maintain not fewer than 5 calves as controls. Challenge each calf after 20-22 days by a respiratory tract route with a sufficient quantity of a suspension of a low-passage virulent bovine respiratory syncytial virus. Observe the calves at least daily for 14 days after challenge and monitor each of them for signs, in particular respiratory signs and virus shedding (by nasal swabs or tracheobronchial washing).

The test is not valid if antibodies against bovine respiratory syncytial virus are detected in any sample from control calves before challenge or if more than 2 of the 5 control calves show no excretion of the challenge virus, as shown by nasal swabs or samples harvested by tracheobronchial washing.

The vaccine virus complies with the test if, during the observation period after challenge, there is a significant reduction in mean titre and in mean duration of virus excretion in vaccinates compared to controls, and a notable reduction in general and local signs in vaccinated calves (if the challenge virus used produces such signs).

3. BATCH TESTS

3-1. **Identification**. Identify the vaccine by an immunostaining test in suitable cell cultures using a monospecific antiserum.

3-2. **Bacteria and fungi**. The vaccine, including where applicable the diluent supplied for reconstitution, complies with the test for sterility prescribed in the monograph *Vaccines for veterinary use (0062)*.

3-3. **Mycoplasmas** (*2.6.7*). The vaccine complies with the test for mycoplasmas.

3-4. **Extraneous agents**. Neutralise the vaccine virus with a suitable monospecific antiserum against bovine respiratory syncytial virus and inoculate into cell cultures known for their susceptibility to viruses pathogenic for cattle. Carry out at least one passage and maintain the cultures for 14 days.

The vaccine complies with the test if no cytopathic effect develops and there is no sign of the presence of haemadsorbing agents. Carry out a specific test for pestiviruses.

3-5. **Virus titre**. Titrate the vaccine virus in suitable cell cultures. The vaccine complies with the test if 1 dose contains not less than the minimum virus titre stated on the label.

3-6. **Potency**. The vaccine complies with the requirements of the test prescribed under Immunogenicity (section 2-3-3) when administered by a recommended route and method. It is not necessary to carry out the potency test for each batch of the vaccine if it has been carried out on a representative batch using a vaccinating dose containing not more than the minimum virus titre stated on the label.

04/2013:1952

BOVINE VIRAL DIARRHOEA VACCINE (INACTIVATED)

Vaccinum diarrhoeae viralis bovinae inactivatum

1. DEFINITION

Bovine viral diarrhoea vaccine (inactivated) is a preparation of one or more suitable strains of bovine diarrhoea virus inactivated while maintaining adequate immunogenic properties. This monograph applies to vaccines intended for the active immunisation of heifers and cows for protection of their progeny against transplacental infection.

2. PRODUCTION

2-1. *PREPARATION OF THE VACCINE*

The vaccine virus is grown in cell cultures. The viral suspensions of each vaccine virus are harvested separately and inactivated by a method that maintains immunogenicity. The viral suspensions may be purified and concentrated. The vaccine may be adjuvanted.

2-2. *SUBSTRATE FOR VIRUS PROPAGATION*

2-2-1. **Cell cultures**. The cell cultures comply with the requirements for cell cultures for production of veterinary vaccines (*5.2.4*).

2-3. *CHOICE OF VACCINE COMPOSITION*

The vaccine is shown to be satisfactory with respect to safety (*5.2.6*) and efficacy (*5.2.7*) for the cattle for which it is intended.

The following tests for safety (section 2-3-1) and immunogenicity (section 2-3-2) may be used during the demonstration of safety and efficacy.

2-3-1. **Safety**. Carry out the test for each route and method of administration to be recommended for vaccination and in each category of cattle for which the vaccine is intended. Use a batch of vaccine containing not less than the maximum potency that may be expected in a batch of vaccine.

2-3-1-1. *General safety*. For each test, use not fewer than 8 cattle of the minimum age to be recommended for vaccination and that do not have bovine diarrhoea virus or antibodies against the virus. Administer to each animal 1 dose of the vaccine. If the schedule to be recommended requires a 2nd dose, administer another dose after an interval of at least 14 days. Observe the cattle at least daily for at least 14 days.

The vaccine complies with the test if no animal shows abnormal local or systemic reactions or dies from causes attributable to the vaccine.

2-3-1-2. *Safety in pregnant cattle*. If the vaccine is intended for use in pregnant cattle, use not fewer than 8 cattle at the beginning of each semester for which use is not contraindicated. Administer to each animal 1 dose of the vaccine. If the schedule to be recommended requires a 2nd dose, administer another dose after an interval of at least 14 days. Observe the cattle at least daily until calving.

The vaccine complies with the test if no animal shows abnormal local or systemic reactions or dies from causes attributable to the vaccine and if no adverse effects on gestation or the offspring are noted.

2-3-1-3. *Examination of reproductive performance*. If the vaccine is intended for administration shortly before or at insemination, absence of undesirable effects on conception rate must be demonstrated.

2-3-2. **Immunogenicity**. The following test is suitable to demonstrate the immunogenicity of the vaccine with respect to bovine diarrhoea virus of genotype 1; if protection against bovine diarrhoea virus of genotype 2 is claimed, an additional test, similar to that described below, but using bovine diarrhoea virus of genotype 2 for challenge, is carried out.

A test is carried out for each route and method of administration to be recommended. The vaccine administered to each heifer is of minimum potency.

Use for the test not fewer than 20 heifers free from bovine diarrhoea virus and that do not have antibodies against bovine diarrhoea virus. Vaccinate not fewer than 13 heifers according to the schedule to be recommended. Maintain not fewer than 7 heifers as controls. Keep all the animals as one group. Inseminate the heifers. Take a blood sample from non-vaccinated heifers shortly before challenge. The test is discontinued if fewer than 10 vaccinated heifers or 5 non-vaccinated heifers are pregnant at the time of challenge. Challenge each heifer between the 60th and 90th days of gestation. For both test models described (observation until calving and harvest of foetuses at 28 days), challenge may be made by the intranasal route with a sufficient quantity of a non-cytopathic strain of bovine diarrhoea virus or alternatively, where the heifers are observed until calving, challenge may be made by contact with a persistently viraemic animal. Observe the heifers clinically at least daily from challenge either until the end of gestation or until harvest of foetuses after 28 days. If abortion occurs, examine the aborted foetus for bovine diarrhoea virus by suitable methods. If cattle are observed until calving, immediately after birth and prior to ingestion of colostrum, examine all calves for viraemia and antibodies against bovine diarrhoea virus. If foetuses are harvested 28 days after challenge, examine the foetuses for bovine diarrhoea virus by suitable methods. Transplacental infection is considered to have occurred if virus is detected in foetal organs or in the blood of newborn calves or if antibodies are detected in precolostral sera of calves.

The test is not valid if any of the control heifers have neutralising antibody before challenge or if transplacental infection fails to occur in more than 10 per cent of the calves from the control heifers. The vaccine complies with the test if at least 90 per cent of the calves from the vaccinated heifers are protected from transplacental infection.

2-4. *MANUFACTURER'S TESTS*

2-4-1. **Residual live virus**. The test for residual live virus is carried out using a quantity of inactivated virus harvest equivalent to not less than 25 doses of vaccine in cells of the same type as those used for production of the vaccine or cells shown to be at least as sensitive; the cells are passaged after 7 days and observed for a total of not less than 14 days. The inactivated virus harvest complies with the test if no live virus is detected.

2-4-2. **Batch potency test**. It is not necessary to carry out the potency test (section 3-4.) for each batch of vaccine if it has been carried out using a batch of vaccine with a minimum potency. Where the test is not carried out, an alternative validated method is used, the criteria for acceptance being set with reference to a batch of vaccine that has given satisfactory results in the test described under Potency. The following test may be used.

Use for the test 7 suitable laboratory animals or calves that do not have antibodies against bovine diarrhoea virus.

Administer by the subcutaneous route to 5 animals a suitable dose of the vaccine. Maintain 2 animals as controls. A 2nd dose of vaccine may be administered after a suitable interval if this has been shown to provide a suitably discriminating test system. Collect blood samples before the 1st vaccination and at a given interval between 14 and 21 days after the last vaccination. Determine the antibody titres against bovine diarrhoea virus by seroneutralisation on suitable cell cultures.

The test is not valid if the control animals show antibodies against bovine diarrhoea virus. The vaccine complies with the test if the level of antibodies in the vaccinates is not lower than that found for a batch of vaccine that has given satisfactory results in the test described under Potency.

3. BATCH TESTS

3-1. **Identification**. When administered to animals that do not have specific neutralising antibodies against bovine diarrhoea virus, the vaccine stimulates the production of such antibodies.

3-2. **Bacteria and fungi**. The vaccine, including where applicable the diluent supplied for reconstitution, complies with the test for sterility prescribed in the monograph *Vaccines for veterinary use (0062)*.

3-3. **Residual live virus**. Carry out a test for residual live bovine diarrhoea virus by inoculating not less than 10 doses onto cells known to be sensitive to bovine diarrhoea virus; passage the cells after 7 days and observe the 2nd culture for not less than 7 days. The vaccine complies with the test if no live virus is detected. If the vaccine contains an adjuvant, separate the adjuvant if possible from the liquid phase by a method that does not interfere with the detection of possible live virus.

3-4. **Potency**. The vaccine complies with the requirements of the test prescribed under Immunogenicity (section 2-3-2) when administered by a recommended route and method.

04/2013:0793

BRUCELLOSIS VACCINE (LIVE) (BRUCELLA MELITENSIS REV. 1 STRAIN) FOR VETERINARY USE

Vaccinum brucellosis (Brucella melitensis stirpis Rev. 1) vivum ad usum veterinarium

1. DEFINITION

Brucellosis vaccine (live) (Brucella melitensis Rev. 1 strain) for veterinary use is a suspension of live *Brucella melitensis* Rev. 1 strain. The vaccine contains not fewer than 0.5×10^9 and not more than 4×10^9 live bacteria per dose. This monograph applies to vaccines intended for the active immunisation of sheep and goats against disease caused by *B. melitensis*.

2. PRODUCTION

2-1. *PREPARATION OF THE VACCINE*

B. melitensis Rev. 1 strain is cultured in a suitable medium. The method of culture is such as to avoid bacterial dissociation and thus maintain the smooth characteristic of the culture. The bacteria are suspended in a buffer solution that may contain a suitable stabiliser. The suspension is distributed into containers.

2-2. *CHOICE OF VACCINE STRAIN*

The vaccine strain is shown to be satisfactory with respect to safety (*5.2.6*) and efficacy (*5.2.7*) for the sheep and goats for which it is intended.

The following tests for safety (section 2-2-1), residual virulence (section 2-2-2), determination of dissociation phase of master seed lot (section 2-2-3) and immunogenicity in mice (section 2-2-4) may be used during the demonstration of safety and efficacy. If the vaccine strain gives satisfactory results in the test for immunogenicity in mice, a challenge in the target species is not necessary.

2-2-1. **Safety**. Use 8 sheep, 4-6 months old, that do not have antibodies against *B. melitensis*. Administer to each sheep by a route to be recommended 3 doses of the vaccine. Observe the sheep at least daily for at least 14 days.

The vaccine complies with the test if no sheep shows notable signs of disease or dies from causes attributable to the vaccine.

2-2-2. **Residual virulence**. Carry out the test is carried out on the master seed lot and on a representative batch of vaccine. If the quantity of the master seed sufficient for performing the test is not available, the lowest passage seed used for the production that is available in sufficient quantity may be used.

Use 32 female CD1 mice, 5-6 weeks old. Vaccinate each mouse by the subcutaneous route with a suspension (0.1 mL) containing 10^8 live bacteria. Euthanise the mice in groups of 8, selected at random, 3, 6, 9 and 12 weeks later. Remove the spleens and homogenise individually and aseptically in 1 mL of *phosphate buffered saline pH 6.8 R*. Spread the entire suspension on plates containing a suitable culture medium (lower limit of detection: 1 bacterium per spleen). Carry out in parallel a similar test using *Brucella melitensis Rev. 1 strain BRP* (reference strain). Calculate the 50 per cent persistence time by the usual statistical methods (*5.3*) for probit analysis.

The product complies with the test if the 50 per cent persistence time for the vaccine strain does not differ significantly from that of the reference strain.

2-2-3. **Determination of dissociation phase of the master seed lot**. Examine not fewer than 200 colonies by a suitable technique. The culture of the vaccine strain is seen to be in the smooth (S) phase.

The seed lot complies with the test if not fewer than 99 per cent of the colonies are of the smooth type.

2-2-4. **Immunogenicity in mice**. The test is carried out on the master seed lot and on a representative batch of vaccine. If the quantity of the master seed sufficient for performing the test is not available, the lowest passage seed used for the production that is available in sufficient quantity may be used.

Use for the test healthy CD1 female mice, 5-7 weeks old and from the same stock. Distribute the mice into 3 groups of 6 mice. Dilute the vaccine strain and the *Brucella melitensis Rev. 1 strain BRP* (reference strain) to a concentration of 10^6 CFU/mL.

Vaccinate by the subcutaneous route the mice of the 1st group with 0.1 mL of the diluted vaccine strain and the mice of the 2nd group with 0.1 mL of the diluted reference strain; keep the 3rd group as the unvaccinated control. After 30 days, challenge all the mice with 2×10^5 bacteria of *B. abortus* strain 544 (CO_2-dependent). Euthanise the mice 15 days later and remove the spleen for *B. abortus* isolation. Record the number of *B. abortus* per spleen (X) and transform this value to obtain $Y = \log_{10} (X/\log_{10} X)$. Then calculate the mean and standard deviation of each group.

The test is valid if:

- the mean of the unvaccinated control group is at least 4.5 (mean of Y);
- the mean of the group receiving the reference strain is lower than 2.5 (mean of Y); and
- the standard deviation of each group is lower than 0.8.

Carry out a statistical comparison of the immunogenicity values of the 3 groups using the least significant differences test. The vaccine strain complies with the test if:

- the immunogenicity value of the group receiving the vaccine strain is significantly lower than the immunogenicity value of the control group; and

– the immunogenicity value of the group receiving the vaccine strain is not significantly different from the immunogenicity value of the group receiving the reference strain.

3. BATCH TESTS

3-1. **Identification**. *B. melitensis* present in the vaccine is identified by suitable morphological, serological and biochemical tests and by culture: Rev. 1 strain is inhibited by addition to the suitable culture medium of either benzylpenicillin sodium (3 µg/mL), thionin (20 µg/mL) or basic fuchsin (20 µg/mL); the strain grows on agar containing 2.5 µg of streptomycin per millilitre.

3-2. **Determination of dissociation phase**. Examine not fewer than 200 colonies by a suitable technique. The culture of the vaccine strain is seen to be in the smooth (S) phase.

The vaccine complies with the test if not fewer than 95 per cent of the colonies are of the smooth type.

3-3. **Bacteria and fungi**. The vaccine complies with the test if it does not contain extraneous micro-organisms. Verify the absence of micro-organisms other than *Brucella melitensis* Rev. 1 strain as described in the test for sterility prescribed in the monograph *Vaccines for veterinary use (0062)*.

3-4. **Live bacteria**. Make a count of live bacteria on a solid medium suitable for the culture of *Brucella melitensis* Rev. 1 strain.

The vaccine complies with the test if it contains not fewer than 0.5×10^9 and not more than 4×10^9 live bacteria per dose.

4. LABELLING

The label states:

– that the vaccine may be dangerous for man;

– that the vaccine is not to be used in pregnant animals;

– that the vaccine may be dangerous for cattle and that they are not to be kept in contact with sheep or goats vaccinated less than 24 h previously.

04/2013:1953

CALF CORONAVIRUS DIARRHOEA VACCINE (INACTIVATED)

Vaccinum inactivatum diarrhoeae vituli coronaviro illatae

1. DEFINITION

Calf coronavirus diarrhoea vaccine (inactivated) is a preparation of one or more suitable strains of bovine coronavirus, inactivated while maintaining adequate immunogenic properties. This monograph applies to vaccines intended for the active immunisation of dams for passive protection of their progeny against coronavirus diarrhoea during the first few weeks of life.

2. PRODUCTION

2-1. *PREPARATION OF THE VACCINE*

Each vaccine virus is grown separately in cell cultures. The viral suspensions of each vaccine virus are harvested separately and inactivated by a method that maintains immunogenicity. The viral suspensions may be purified and concentrated. The vaccine may be adjuvanted.

2-2. *SUBSTRATE FOR VIRUS PROPAGATION*

2-2-1. **Cell cultures**. The cell cultures comply with the requirements for cell cultures for production of veterinary vaccines (*5.2.4*).

2-3. *CHOICE OF VACCINE COMPOSITION*

The vaccine is shown to be satisfactory with respect to safety (*5.2.6*) and efficacy (*5.2.7*) for the pregnant cows for which it is intended.

The following tests for safety (section 2-3-1) and immunogenicity (section 2-3-2) may be used during the demonstration of safety and efficacy.

2-3-1. **Safety in pregnant cows**. Carry out the test for each route and method of administration to be recommended for vaccination, using in each case pregnant cows that have not been vaccinated against bovine coronavirus. Use a batch of vaccine containing not less than the maximum potency that may be expected in a batch of vaccine.

For each test, use not fewer than 8 cows per group at the stage or at different stages of pregnancy according to the schedule to be recommended. Administer to each pregnant animal 1 dose of the vaccine. If the schedule to be recommended requires a 2nd dose, administer another dose after an interval of at least 14 days. After each injection, measure the body temperature on the day of the injection and on the 4 following days. Observe the pregnant cows at least daily until calving.

The vaccine complies with the test if no pregnant cow shows abnormal local or systemic reactions or dies from causes attributable to the vaccine and if no adverse effects on gestation or the offspring are noted.

2-3-2. **Immunogenicity**. A test is carried out for each route and method of administration to be recommended. The vaccine administered to each cow is of minimum potency.

Use for the test not fewer than 15 pregnant cows, preferably that do not have antibodies against bovine coronavirus. Where such cows are not available, use cows that: have not been vaccinated against bovine coronavirus; come from a farm where there is no recent history of infection with bovine coronavirus; and have a low level of antibodies against bovine coronavirus, the levels being comparable in all cows. Vaccinate not fewer than 10 pregnant cows according to the schedule to be recommended. Maintain not fewer than 5 pregnant cows as controls. Starting at calving, take the colostrum and then milk from each cow and keep it in suitable conditions. Determine individually the protective activity of the colostrum and milk from each cow using calves born from healthy cows, and which may be born by Caesarean section, and maintained in an environment where they are not exposed to infection by bovine coronavirus. Feed colostrum and then milk to each calf every 6 h or according to the schedule to be recommended. At 5-7 days after birth, challenge each calf by the oral route with a sufficient quantity of a virulent strain of bovine coronavirus. Observe the calves at least daily for 7 days. Note the incidence, severity and duration of diarrhoea and the duration and quantity of virus excretion.

The vaccine complies with the test if there is a significant reduction in diarrhoea and virus excretion in calves given colostrum and milk from vaccinated cows compared to those given colostrum and milk from controls.

2-4. *MANUFACTURER'S TESTS*

2-4-1. **Residual live virus**. The test for residual live virus is carried out using 2 passages in cell cultures of the same type as those used for production or in cells shown to be at least as sensitive. The quantity of inactivated virus harvest used in the test is equivalent to not less than 10 doses of vaccine. The inactivated virus harvest complies with the test if no live virus is detected.

2-4-2. **Batch potency test**. It is not necessary to carry out the potency test (section 3-5) for each batch of vaccine if it has been carried out using a batch of vaccine with a minimum potency. Where the test is not carried out, an alternative validated method is used, the criteria for acceptance being set with reference to a batch of vaccine that has given satisfactory results in the test described under Potency. The following test may be used.

To obtain a valid assay, it may be necessary to carry out a test using several groups of animals, each receiving a different dose. For each dose required, carry out the test as follows. Use for the test not fewer than 7 animals of a suitable species and that do not have specific antibodies against bovine coronavirus. Vaccinate not fewer than 5 animals using 1 injection of a suitable dose. Maintain not fewer than 2 animals as controls. Where the recommended schedule requires a booster injection to be given, a booster vaccination may also be given in this test provided it has been demonstrated that this will still provide a suitably sensitive test system. At a given interval not less than 14 days after the last injection, collect blood from each animal and prepare serum samples. Use a suitable validated test to measure the antibody response. The vaccine complies with the test if the antibody level in the vaccinates is not significantly less than that obtained with a batch that has given satisfactory results in the test described under Potency and there is no significant increase in antibody titre in the controls.

3. BATCH TESTS

3-1. **Identification**. Injected into animals that do not have specific antibodies against bovine coronavirus, the vaccine stimulates the formation of such antibodies.

3-2. **Bacteria and fungi**. The vaccine, including where applicable the diluent supplied for reconstitution, complies with the test for sterility prescribed in the monograph *Vaccines for veterinary use (0062)*.

3-3. **Residual live virus**. Carry out a test for residual live virus using 10 doses of vaccine and 2 passages in cell cultures of the same type as those used for production of the vaccine or other cell cultures of suitable sensitivity. The vaccine complies with the test if no live virus is detected. If the vaccine contains an adjuvant that interferes with the test, separate it if possible from the liquid phase of the vaccine by a method that does not inactivate virus nor interfere in any other way with detection of live viruses.

3-4. **Specified extraneous agents**. Use 2 cattle not less than 6 months old and that do not have antibodies against bovine herpesvirus 1 (BHV1), bovine leukaemia virus (BLV) and bovine viral diarrhoea virus (BVDV). Administer to each animal by a recommended route a double dose of the vaccine, then another dose after 14 days. Observe the cattle at least daily until 14 days after the last administration. Take a blood sample at the end of the observation period. The vaccine complies with the test if it does not stimulate the formation of antibodies against bovine herpesvirus 1 (BHV1), bovine leukaemia virus (BLV) and bovine viral diarrhoea virus (BVDV).

3-5. **Potency**. The vaccine complies with the requirements of the test prescribed under Immunogenicity (section 2-3-2) when administered by a recommended route and method.

4. LABELLING

The label states the recommended schedule for administering colostrum and milk, *post-partum*.

04/2013:1954

CALF ROTAVIRUS DIARRHOEA VACCINE (INACTIVATED)

Vaccinum inactivatum diarrhoeae vituli rotaviro illatae

1. DEFINITION

Calf rotavirus diarrhoea vaccine (inactivated) is a preparation of one or more suitable strains of bovine rotavirus, inactivated while maintaining adequate immunogenic properties. This monograph applies to vaccines intended for the active immunisation of dams for passive protection of their progeny against rotavirus diarrhoea during the first few weeks of life.

2. PRODUCTION

2-1. *PREPARATION OF THE VACCINE*

Each vaccine virus is grown separately in cell cultures. The viral suspensions of each vaccine virus are harvested separately and inactivated by a method that maintains immunogenicity. The viral suspensions may be purified and concentrated. The vaccine may be adjuvanted.

2-2. *SUBSTRATE FOR VIRUS PROPAGATION*

2-2-1. **Cell cultures**. The cell cultures comply with the requirements for cell cultures for production of veterinary vaccines (*5.2.4*).

2-3. *CHOICE OF VACCINE COMPOSITION*

The vaccine is shown to be satisfactory with respect to safety (*5.2.6*) and efficacy (*5.2.7*) for the pregnant cows for which it is intended.

The following tests for safety (section 2-3-1) and immunogenicity (section 2-3-2) may be used during the demonstration of safety and efficacy.

2-3-1. **Safety in pregnant cows**. Carry out the test for each route and method of administration to be recommended for vaccination, using in each case pregnant cows that have not been vaccinated against bovine rotavirus. Use a batch of vaccine containing not less than the maximum potency that may be expected in a batch of vaccine.

For each test, use not fewer than 8 cows per group at the stage or at different stages of pregnancy according to the schedule to be recommended. Administer to each pregnant animal 1 dose of the vaccine. If the schedule to be recommended requires a 2nd dose, administer another dose after an interval of at least 14 days. After each injection, measure the body temperature on the day of the injection and on the 4 following days. Observe the pregnant cows at least daily until calving.

The vaccine complies with the test if no pregnant cow shows abnormal local or systemic reactions or dies from causes attributable to the vaccine and if no adverse effects on gestation or the offspring are noted.

2-3-2. **Immunogenicity**. A test is carried out for each route and method of administration to be recommended. The vaccine administered to each cow is of minimum potency.

Use for the test not fewer than 15 pregnant cows, preferably that do not have antibodies against bovine rotavirus. Where such cows are not available, use cows that: have not been vaccinated against bovine rotavirus; come from a farm where there is no recent history of infection with bovine rotavirus; and have a low level of antibodies against bovine rotavirus, the levels being comparable in all cows. Vaccinate not fewer than 10 pregnant cows according to the schedule to be recommended. Maintain not fewer than 5 pregnant cows as controls. Starting at calving, take the colostrum and then milk from each cow and keep it in suitable conditions. Determine individually the protective activity of the colostrum and milk from each cow using calves born from healthy cows, and which may be born by Caesarean section, and maintained in

an environment where they are not exposed to infection by bovine rotavirus. Feed colostrum and then milk to each calf every 6 h or according to the schedule to be recommended. At 5-7 days after birth, challenge each calf by the oral route with a sufficient quantity of a virulent strain of bovine rotavirus. Observe the calves at least daily for 7 days. Note the incidence, severity and duration of diarrhoea and the duration and quantity of virus excretion.

The vaccine complies with the test if there is a significant reduction in diarrhoea and virus excretion in calves given colostrum and milk from vaccinated cows compared to those given colostrum and milk from controls.

2-4. *MANUFACTURER'S TESTS*

2-4-1. **Residual live virus**. The test for residual live virus is carried out using 2 passages in cell cultures of the same type as those used for production or in cells shown to be at least as sensitive. The quantity of inactivated virus harvest used in the test is equivalent to not less than 100 doses of vaccine. The inactivated viral harvest complies with the test if no live virus is detected.

2-4-2. **Batch potency test**. It is not necessary to carry out the potency test (section 3-5) for each batch of vaccine if it has been carried out using a batch of vaccine with a minimum potency. Where the test is not carried out, an alternative validated method is used, the criteria for acceptance being set with reference to a batch of vaccine that has given satisfactory results in the test described under Potency. The following test may be used.

To obtain a valid assay, it may be necessary to carry out a test using several groups of animals, each receiving a different dose. For each dose required, carry out the test as follows. Use for the test not fewer than 7 animals of a suitable species and that do not have antibodies against bovine rotavirus. Vaccinate not fewer than 5 animals using 1 injection of a suitable dose. Maintain not fewer than 2 animals as controls. Where the recommended schedule requires a booster injection to be given, a booster vaccination may also be given in this test provided it has been demonstrated that this will still provide a suitably sensitive test system. At a given interval not less than 14 days after the last injection, collect blood from each animal and prepare serum samples. Use a suitable validated test to measure the antibody response. The vaccine complies with the test if the antibody level in the vaccinates is not significantly less than that obtained with a batch that has given satisfactory results in the test described under Potency and there is no significant increase in antibody titre in the controls.

3. BATCH TESTS

3-1. **Identification**. Injected into animals that do not have specific antibodies against bovine rotavirus, the vaccine stimulates the formation of such antibodies.

3-2. **Bacteria and fungi**. The vaccine, including where applicable the diluent supplied for reconstitution, complies with the test for sterility prescribed in the monograph *Vaccines for veterinary use (0062)*.

3-3. **Residual live virus**. Carry out a test for residual live virus using 10 doses of vaccine and 2 passages in cell cultures of the same type as those used for production of the vaccine or other cell cultures of suitable sensitivity. The vaccine complies with the test if no live virus is detected. If the vaccine contains an adjuvant that interferes with the test, separate it if possible from the liquid phase of the vaccine by a method that does not inactivate virus nor interfere in any other way with detection of live viruses.

3-4. **Specified extraneous agents**. Use 2 cattle not less than 6 months old and that do not have antibodies against bovine herpesvirus 1 (BHV1), bovine leukaemia virus (BLV) and bovine viral diarrhoea virus (BVDV). Administer to each animal by a recommended route a double dose of the vaccine, then another dose after 14 days. Observe the cattle at least daily until 14 days after the last administration. Take a blood sample at the end of the observation period. The vaccine complies with the test if it does not stimulate the formation of antibodies against bovine herpesvirus 1 (BHV 1), bovine leukaemia virus (BLV) and bovine viral diarrhoea virus (BVDV).

3-5. **Potency**. The vaccine complies with the requirements of the test prescribed under Immunogenicity (section 2-3-2) when administered by a recommended route and method.

4. LABELLING

The label states the recommended schedule for administering colostrum and milk, *post-partum*.

04/2013:1298

CANINE ADENOVIRUS VACCINE (INACTIVATED)

Vaccinum adenovirosis caninae inactivatum

1. DEFINITION

Canine adenovirus vaccine (inactivated) is a preparation of one or more suitable strains of canine adenovirus 1 (canine contagious hepatitis virus) and/or canine adenovirus 2, inactivated while maintaining adequate immunogenic properties. This monograph applies to vaccines intended for the active immunisation of dogs against canine contagious hepatitis and/or respiratory disease caused by canine adenovirus.

2. PRODUCTION

2-1. *PREPARATION OF THE VACCINE*

The vaccine virus is grown in cell cultures. The virus harvest is inactivated. The vaccine may be adjuvanted.

2-2. *SUBSTRATE FOR VIRUS PROPAGATION*

2-2-1. **Cell cultures**. The cell cultures comply with the requirements for cell cultures for production of veterinary vaccines (*5.2.4*).

2-3. *CHOICE OF VACCINE COMPOSITION*

The vaccine is shown to be satisfactory with respect to safety (*5.2.6*) and efficacy (*5.2.7*) for the dogs for which it is intended.

The following tests for safety (section 2-3-1) and immunogenicity (section 2-3-2) may be used during the demonstration of safety and efficacy.

2-3-1. **Safety**. Carry out the test for each route and method of administration to be recommended for vaccination. Use a batch of vaccine containing not less than the maximum potency that may be expected in a batch of vaccine.

For each test, use not fewer than 8 dogs of the minimum age to be recommended and that do not have antibodies against canine adenovirus 1 or 2. Administer to each dog 1 dose of the vaccine. If the schedule to be recommended requires a 2nd dose, administer 1 dose after an interval of at least 14 days. Observe the dogs at least daily for at least 14 days after the last administration.

The vaccine complies with the test if no dog shows abnormal local or systemic reactions or dies from causes attributable to the vaccine.

2-3-2. **Immunogenicity**. For vaccines intended to protect against hepatitis, the test described below is suitable for demonstration of immunogenicity. If the vaccine is indicated for protection against respiratory signs, a further test to demonstrate immunogenicity for this indication is also necessary.

A test is carried out for each route and method of administration to be recommended for vaccination, using in each case dogs of the minimum age to be recommended. The vaccine administered to each dog is of minimum potency.

Use for the test not fewer than 7 dogs that do not have antibodies against canine adenovirus. Vaccinate not fewer than 5 dogs, according to the schedule to be recommended. Maintain not fewer than 2 dogs as controls. Challenge each dog after 20-22 days by the intravenous route with a sufficient quantity of a suspension of pathogenic canine adenovirus. Observe the dogs at least daily for 21 days after challenge. Dogs displaying typical signs of serious infection with canine adenovirus are euthanised to avoid unnecessary suffering.

The test is not valid if, during the observation period after challenge, fewer than 100 per cent of the control dogs die from or show typical signs of serious infection with canine adenovirus. The vaccine complies with the test if, during the observation period, all the vaccinated dogs survive and show no signs of disease.

2-4. *MANUFACTURER'S TESTS*

2-4-1. **Residual live virus**. The test for residual live virus is carried out using a quantity of inactivated virus harvest equivalent to at least 10 doses of vaccine with 2 passages in cell cultures of the same type as those used for production or in cell cultures shown to be at least as sensitive. The inactivated viral harvest complies with the test if no live virus is detected.

2-4-2. **Batch potency**. It is not necessary to carry out the Potency test (section 3-4) for each batch of vaccine if it has been carried out using a batch of vaccine with a minimum potency. Where the test is not carried out, an alternative validated method is used, the criteria for acceptance being set with reference to a batch of vaccine that has given satisfactory results in the test described under Potency.

3. BATCH TESTS

3-1. **Identification**. When injected into animals that do not have specific antibodies against the type or types of canine adenovirus stated on the label, the vaccine stimulates the formation of such antibodies.

3-2. **Bacteria and fungi**. The vaccine, including where applicable the diluent supplied for reconstitution, complies with the test for sterility prescribed in the monograph *Vaccines for veterinary use (0062)*.

3-3. **Residual live virus**. Carry out a test for residual canine adenovirus using 10 doses of vaccine by inoculation into sensitive cell cultures; make a passage after 6-8 days and maintain the cultures for 14 days. The vaccine complies with the test if no live virus is detected. If the vaccine contains an adjuvant, separate the adjuvant from the liquid phase by a method that does not inactivate or otherwise interfere with the detection of live virus.

3-4. **Potency**. The vaccine complies with the requirements of the test mentioned under Immunogenicity (section 2-3-2) when administered by a recommended route and method.

04/2013:1951

CANINE ADENOVIRUS VACCINE (LIVE)

Vaccinum adenovirosidis caninae vivum

1. DEFINITION

Canine adenovirus vaccine (live) is a preparation of a suitable strain of canine adenovirus 2. This monograph applies to vaccines intended for the active immunisation of dogs against canine contagious hepatitis and/or respiratory disease caused by canine adenovirus.

2. PRODUCTION

2-1. *PREPARATION OF THE VACCINE*

The vaccine virus is grown in cell cultures.

2-2. *SUBSTRATE FOR VIRUS PROPAGATION*

2-2-1. **Cell cultures**. The cell cultures comply with the requirements for cell cultures for production of veterinary vaccines (*5.2.4*).

2-3. *CHOICE OF VACCINE VIRUS*

The vaccine virus is shown to be satisfactory with respect to safety (*5.2.6*) and efficacy (*5.2.7*) for the dogs for which it is intended.

The following tests for safety (section 2-3-1), increase in virulence (section 2-3-2) and immunogenicity (section 2-3-3) may be used during the demonstration of safety and efficacy.

2-3-1. **Safety**. Carry out the test for each route and method of administration to be recommended for vaccination. Use vaccine virus at the least attenuated passage level that will be present in a batch of the vaccine.

For each test, use not fewer than 5 dogs of the minimum age to be recommended for vaccination and that do not have antibodies against canine adenoviruses. Administer to each dog a quantity of the vaccine virus equivalent to not less than 10 times the maximum virus titre likely to be contained in 1 dose of the vaccine. Observe the dogs at least daily for at least 14 days.

The vaccine virus complies with the test if no dog shows abnormal local or systemic reactions, signs of disease or dies from causes attributable to the vaccine virus.

2-3-2. **Increase in virulence**. Carry out the test according to general chapter *5.2.6* using dogs 5-7 weeks old, that do not have antibodies against canine adenoviruses. If the properties of the vaccine virus allow sequential passage through 5 groups via natural spreading, this method may be used, otherwise passage as described below is carried out.

Administer to each dog of the 1st group by a route to be recommended a quantity of the vaccine virus that will allow recovery of virus for the passages described below. Administer the virus by the route to be recommended for vaccination most likely to lead to reversion of virulence. After 4-6 days, prepare a suspension from the nasal and pharyngeal mucosa, tonsils, lung, spleen and if they are likely to contain virus, liver and kidney of each dog and pool the samples. Administer 1 mL of the pooled samples by a suitable route – for example, the intranasal route – to each dog of the next group. Carry out this passage operation not fewer than 4 times; verify the presence of the virus at each passage. If the virus is not found at a passage level, repeat the passage by administration to a group of 10 animals.

If the 5th group of animals shows no evidence of an increase in virulence indicative of reversion during the observation period, further testing is not required. Otherwise, carry out an additional safety test and compare the clinical signs and any relevant parameters in a group of at least 8 animals receiving the material used for the 1st passage and another similar group receiving the virus at the final passage level.

The vaccine virus complies with the test if no indication of increased virulence of the virus recovered for the final passage compared with the material used for the 1st passage is observed. If virus is not recovered after an initial passage in 2 animals and a subsequent repeat passage in 10 animals, the vaccine virus also complies with the test.

2-3-3. **Immunogenicity**. A test is carried out for each route and method of administration to be recommended for vaccination using in each case dogs of the minimum age to be recommended. The quantity of vaccine virus to be administered to each dog is not greater than the minimum virus titre to be stated on the label and the virus is at the most attenuated passage level that will be present in a batch of vaccine.

2-3-3-1. *Vaccines intended to protect against hepatitis.* Use for the test not fewer than 7 dogs that do not have antibodies against canine adenoviruses. Vaccinate not fewer than 5 dogs,

according to the schedule to be recommended. Maintain not fewer than 2 dogs as controls. Challenge each dog after 20-22 days by the intravenous route with a sufficient quantity of a suspension of virulent canine adenovirus 1 (canine contagious hepatitis virus). Observe the dogs at least daily for 21 days after challenge. Dogs displaying typical signs of serious infection with canine adenovirus are euthanised to avoid unnecessary suffering.

The test is not valid if during the observation period after challenge, fewer than 100 per cent of the control dogs die or show notable signs of canine adenovirosis.

The vaccine virus complies with the test if during the observation period after challenge, all the vaccinated dogs survive and show no signs of disease except for a possible transient elevated rectal temperature.

2-3-3-2. *Vaccine intended to protect against respiratory signs*. Use for the test not fewer than 20 dogs that do not have antibodies against canine adenoviruses. Vaccinate not fewer than 10 dogs, according to the schedule to be recommended. Maintain not fewer than 10 dogs as controls. Challenge each dog after 20-22 days by the intranasal route with a quantity of a suspension of virulent canine adenovirus 2 sufficient to cause typical signs of respiratory disease in a dog that does not have antibodies against canine adenoviruses. Observe the dogs at least daily for 10 days after challenge. Record the incidence of signs of respiratory and general disease in each dog (for example, sneezing, coughing, nasal and lachrymal discharge, loss of appetite). Collect nasal swabs or washings from each dog daily from days 2 to 10 after challenge and test these samples to determine the presence and titre of excreted virus.

The vaccine complies with the test if there is a notable decrease in the incidence and severity of signs and in virus excretion in vaccinates compared to controls.

3. BATCH TESTS

3-1. **Identification**. The vaccine mixed with monospecific antiserum against canine adenovirus 2 no longer infects susceptible cell cultures.

3-2. **Bacteria and fungi**. The vaccine, including where applicable the diluent supplied for reconstitution, complies with the test for sterility prescribed in the monograph *Vaccines for veterinary use (0062)*.

3-3. **Mycoplasmas** (*2.6.7*). The vaccine complies with the test for mycoplasmas.

3-4. **Extraneous agents**. Neutralise the vaccine virus with a suitable monospecific antiserum against canine adenovirus 2 and inoculate into cell cultures known for their susceptibility to viruses pathogenic for the dog. Carry out a passage after 6-8 days and maintain the cultures for a total of 14 days.

The vaccine complies with the test if no cytopathic effect develops and there is no sign of the presence of haemadsorbing agents.

3-5. **Virus titre**. Titrate the vaccine virus in suitable cell cultures. The vaccine complies with the test if one dose contains not less than the minimum virus titre stated on the label.

3-6. **Potency**. The vaccine complies with the requirements of one or both of the tests prescribed under Immunogenicity (section 2-3-3) when administered by a recommended route and method. It is not necessary to carry out the potency test for each batch of the vaccine if it has been carried out on a representative batch using a vaccinating dose containing not more than the minimum virus titre stated on the label.

04/2013:0448

CANINE DISTEMPER VACCINE (LIVE)

Vaccinum morbi Carrei vivum ad canem

1. DEFINITION

Canine distemper vaccine (live) is a preparation of a suitable strain of distemper virus. This monograph applies to vaccines intended for the active immunisation of dogs against canine distemper.

2. PRODUCTION

2-1. *PREPARATION OF THE VACCINE*

The vaccine virus is grown in embryonated hens' eggs or in cell cultures.

2-2. *SUBSTRATE FOR VIRUS PROPAGATION*

2-2-1. **Embryonated hens' eggs**. If the vaccine virus is grown in embryonated hens' eggs, they are obtained from flocks free from specified pathogens (SPF) (*5.2.2*).

2-2-2. **Cell cultures**. If the vaccine virus is grown in cell cultures, they comply with the requirements for cell cultures for production of veterinary vaccines (*5.2.4*).

2-3. *CHOICE OF VACCINE VIRUS*

The vaccine virus is shown to be satisfactory with respect to safety (*5.2.6*) and efficacy (*5.2.7*) for the dogs for which it is intended.

The following tests for safety (section 2-3-1), increase in virulence (section 2-3-2) and immunogenicity (section 2-3-3) may be used during the demonstration of safety and efficacy.

2-3-1. **Safety**. Carry out the test for each route and method of administration to be recommended for vaccination. Use vaccine virus at the least attenuated passage level that will be present in a batch of the vaccine.

For each test, use not fewer than 5 dogs of the minimum age to be recommended for vaccination and that do not have antibodies against canine distemper virus. Administer to each dog a quantity of the vaccine virus equivalent to not less than 10 times the maximum virus titre likely to be contained in 1 dose of the vaccine. Observe the dogs at least daily for 42 days.

The vaccine virus complies with the test if no dog shows abnormal local or systemic reactions, signs of disease or dies from causes attributable to the vaccine virus.

2-3-2. **Increase in virulence**. Carry out the test according to general chapter *5.2.6* using dogs 5-7 weeks old, that do not have antibodies against canine distemper virus. If the properties of the vaccine virus allow sequential passage through 5 groups via natural spreading, this method may be used, otherwise passage as described below is carried out.

Administer to each dog of the 1st group by a route to be recommended a quantity of the vaccine virus that will allow recovery of virus for the passages described below. Administer the virus by the route to be recommended for vaccination most likely to lead to reversion to virulence. After 5-10 days, prepare a suspension from the nasal mucosa, tonsils, thymus, spleen and the lungs and their local lymph nodes of each dog and pool the samples. Administer 1 mL of the pooled samples by the intranasal route to each dog of the next group. Carry out this passage operation not fewer than 4 times; verify the presence of the virus at each passage. If the virus is not found at a passage level, repeat the passage by administration to a group of 10 animals.

If the 5th group of animals shows no evidence of an increase in virulence indicative of reversion during the observation period, further testing is not required. Otherwise, carry out an additional safety test and compare the clinical signs and any

Vaccines

relevant parameters in a group of at least 8 animals receiving the material used for the 1st passage and another similar group receiving the virus at the final passage level.

The vaccine virus complies with the test if no indication of increased virulence of the virus recovered for the final passage compared with the material used for the 1st passage is observed. If virus is not recovered after an initial passage in 2 animals and a subsequent repeat passage in 10 animals, the vaccine virus also complies with the test.

2-3-3. **Immunogenicity**. A test is carried out for each route and method of administration to be recommended for vaccination using in each case dogs 8-16 weeks old. The quantity of vaccine virus to be administered to each dog is not greater than the minimum virus titre to be stated on the label and the virus is at the most attenuated passage level that will be present in a batch of vaccine.

Use for the test not fewer than 7 dogs that do not have antibodies against canine distemper virus. Vaccinate not fewer than 5 dogs according to the schedule to be recommended. Maintain not fewer than 2 dogs as controls. Challenge each dog after 20-22 days by the intravenous route with a sufficient quantity of a suspension of virulent canine distemper virus. Observe the dogs at least daily for 21 days after challenge. Dogs displaying typical signs of serious infection with canine distemper virus are euthanised to avoid unnecessary suffering.

The test is not valid if during the observation period after challenge, fewer than 100 per cent of the control dogs die or show notable signs of canine distemper.

The vaccine virus complies with the test if during the observation period after challenge, all the vaccinated dogs survive and show no signs of disease.

3. BATCH TESTS

3-1. **Identification**. The vaccine mixed with a monospecific distemper antiserum against canine distemper virus no longer provokes cytopathic effects in susceptible cell cultures.

3-2. **Bacteria and fungi**. The vaccine, including where applicable the diluent supplied for reconstitution, complies with the test for sterility prescribed in the monograph *Vaccines for veterinary use (0062)*.

3-3. **Mycoplasmas** (*2.6.7*). The vaccine complies with the test for mycoplasmas.

3-4. **Extraneous agents**. Neutralise the vaccine virus with a suitable monospecific antiserum against canine distemper virus and inoculate into cell cultures known for their susceptibility to viruses pathogenic for the dog. Carry out a passage after 6-8 days and maintain the cultures for 14 days.

The vaccine complies with the test if no cytopathic effect develops and there is no sign of the presence of haemadsorbing agents.

3-5. **Virus titre**. Titrate the vaccine virus in suitable cell cultures. The vaccine complies with the test if one dose contains not less than the minimum virus titre stated on the label.

3-6. **Potency**. The vaccine complies with the requirements of the test prescribed under Immunogenicity (section 2-3-3) when administered by a recommended route and method. It is not necessary to carry out the potency test for each batch of the vaccine if it has been carried out on a representative batch using a vaccinating dose containing not more than the minimum virus titre stated on the label.

04/2013:0447

CANINE LEPTOSPIROSIS VACCINE (INACTIVATED)

Vaccinum leptospirosis caninae inactivatum

1. DEFINITION

Canine leptospirosis vaccine (inactivated) is a preparation of inactivated whole organisms and/or antigenic extract(s) of one or more suitable strains of one or more of *Leptospira interrogans* serovar canicola, serovar icterohaemorrhagiae or any other epidemiologically appropriate serovar, inactivated while maintaining adequate immunogenic properties. This monograph applies to vaccines intended for the active immunisation of dogs against leptospirosis.

2. PRODUCTION

2-1. *PREPARATION OF THE VACCINE*

The seed material is cultured in a suitable medium; each strain is cultivated separately. During production, various parameters such as growth rate are monitored by suitable methods; the values are within the limits approved for the particular product. Purity and identity are verified on the harvest using suitable methods. After cultivation, the bacterial harvests are collected separately and inactivated by a suitable method. The antigen may be concentrated. The vaccine may be adjuvanted.

2-2. *CHOICE OF VACCINE COMPOSITION*

The vaccine is shown to be satisfactory with respect to safety (*5.2.6*) and efficacy (*5.2.7*) for the dogs for which it is intended.

The following tests for safety (section 2-2-1) and immunogenicity (section 2-2-2) may be used during the demonstration of safety and efficacy.

2-2-1. **Safety**. Carry out the test for each route and method of administration to be recommended for vaccination and in dogs of each category for which the vaccine is to be intended, using in each case dogs not older than the minimum age to be recommended for vaccination. Use a batch of vaccine containing not less than the maximum potency that may be expected in a batch of vaccine.

For each test, use not fewer than 8 dogs that do not have antibodies against the principal *L. interrogans* serovars (icterohaemorrhagiae, canicola, grippotyphosa, sejroe, hardjo, hebdomonadis, pomona, australis and autumnalis). Administer to each dog 1 dose of the vaccine. If the schedule to be recommended requires a 2nd dose, administer 1 dose after the recommended interval. Observe the dogs at least daily for at least 14 days after the last administration. Record body temperatures the day before each vaccination, at vaccination, 4 h later and daily for 4 days.

The vaccine complies with the test if no dog shows abnormal local or systemic reactions, signs of disease or dies from causes attributable to the vaccine.

2-2-2. **Immunogenicity**. For each type of the serovars against which protective immunity is claimed on the label, carry out a separate test with a challenge strain representative of that serovar.

Each test is carried out for each route and method of administration to be recommended for vaccination, using in each case dogs of the minimum age to be recommended. The vaccine administered to each dog is of minimum potency.

Use for the test not fewer than 12 dogs that do not have antibodies against the principal serovars of *L. interrogans* (icterohaemorrhagiae, canicola, grippotyphosa, sejroe, hardjo, hebdomonadis, pomona, australis and autumnalis). Vaccinate not fewer than 6 dogs, according to the schedule to be recommended. Maintain not fewer than 6 dogs as controls. Challenge each dog after 25-28 days by the conjunctival and/or

intraperitoneal route with a sufficient quantity of a suspension of the relevant pathogenic *L. interrogans* serovar. Observe the dogs at least daily for 28 days after challenge.

Examine the dogs daily and record and score clinical signs observed post-challenge and any deaths that occur. If a dog shows marked signs of disease, it is euthanised. Monitor body temperatures each day for the first week after challenge. Collect blood samples from each dog on days 0, 2, 3, 4, 5, 8 and 11 post challenge. Collect urine samples from each dog on days 0, 3, 5, 8, 11, 14, 21 and 28 post challenge. Euthanise surviving dogs at the end of the observation period. Carry out post-mortem examination on any dog that dies during the observation period and on the remainder when euthanised at the end of the observation period. In particular, examine the liver and kidneys for macroscopic and microscopic signs of leptospira infection. Take a sample of each kidney and test each blood, urine and kidney sample for the presence of challenge organisms by re-isolation or by another suitable method. Analyse blood samples to detect biochemical and haematological changes indicative of infection and score these.

The test is not valid if: samples give positive results on day 0; *L. interrogans* serovar challenge strain is re-isolated from or demonstrated by another suitable method to be present in fewer than 2 samples on fewer than 2 different days, to show infection has been established in fewer than 80 per cent of the control dogs.

The vaccine complies with the test if: at least 80 per cent of the vaccinates show no more than mild signs of disease (for example, transient hyperthermia) and, depending on the *L. interrogans* serovar used for the challenge, one or more of the following is also shown:

- where the vaccine is intended to have a beneficial effect against signs of disease, the clinical scores and haematological and biochemical scores are statistically lower for the vaccinates than for the controls,
- where the vaccine is intended to have a beneficial effect against infection, the number of days that the organisms are detected in the blood is statistically lower for the vaccinates than for the controls,
- where the vaccine is intended to have a beneficial effect against urinary tract infection and excretion, the number of days that the organisms are detected in the urine and the number of kidney samples in which the organisms are detected is statistically lower for the vaccinates than for the controls.

2-3. *MANUFACTURER'S TESTS*

2-3-1. **Batch potency test**. It is not necessary to carry out the Potency test (section 3-4.) for each batch of the vaccine if it has been carried out using a batch of vaccine with a minimum potency. Where the test is not carried out, an alternative validated method is used, the criteria for acceptance being set with reference to a batch of vaccine that has given satisfactory results in the test described under Potency. The following tests may be used.

2-3-1-1. *For vaccines with or without adjuvants*. If leptospira from more than one serovar (for example *L. interrogans* serovar canicola and serovar icterohaemorrhagiae) has been used to prepare the vaccine, carry out a batch potency test for each serovar against which protective immunity is claimed on the label. Use for the test 10 healthy hamsters not more than 3 months old, that do not have antibodies against the principal serovars of *L. interrogans* (icterohaemorrhagiae, canicola, grippotyphosa, sejroe, hardjo, hebdomonadis, pomona, australis and autumnalis) and which have been obtained from a regularly tested and certified leptospira-free source. Administer 1/40 of the dose for dogs by the subcutaneous route to 5 hamsters. Maintain 5 hamsters as controls. Challenge each hamster after 15-20 days by the intraperitoneal route with a sufficient quantity of a virulent culture of leptospirae of the serovar against which protective immunity is claimed on the label. The vaccine complies with the test if not fewer than 4 of the 5 control hamsters die showing typical signs of leptospira infection within 14 days of receiving the challenge suspension and if not fewer than 4 of the 5 vaccinated hamsters remain in good health for 14 days after the death of 4 control hamsters.

2-3-1-2. *For vaccines with or without adjuvants*. A suitable validated sero-response test may be carried out. Vaccinate each animal in a group of experimental animals with a suitable dose. Collect blood samples after a suitable, fixed time after vaccination. For each of the serovars present in the vaccine, an *in vitro* test is carried out on individual blood samples to determine the antibody response to one or more antigenic components which are indicators of protection and which are specific for that serovar. The criteria for acceptance are set with reference to a batch of vaccine that has given satisfactory results in the test described under Potency.

2-3-1-3. *For vaccines without adjuvants*. For each of the serovars present in the vaccine, a suitable validated *in vitro* test may be carried out to determine the content of one or more antigenic components which are indicators of protection and which are specific for that serovar. The criteria for acceptance are set with reference to a batch of vaccine that has given satisfactory results in the test described under Potency.

3. BATCH TESTS

3-1. **Identification**. When injected into healthy animals that do not have specific antibodies against leptospira serovar(s) present in the vaccine, the vaccine stimulates the production of such antibodies. If test 2-3-1-3 is used for the batch potency test, it also serves to identify the vaccine.

3-2. **Bacteria and fungi**. The vaccine, including where applicable the diluent supplied for reconstitution, complies with the test for sterility prescribed in the monograph *Vaccines for veterinary use (0062)*.

3-3. **Residual live bacteria**. Carry out a test for live leptospirae by inoculation of a specific medium. Inoculate 1 mL of the vaccine into 100 mL of the medium. Incubate at 30 °C for 14 days, subculture into a further quantity of the medium and incubate both media at 30 °C for 14 days: the vaccine complies with the test if no growth occurs in either medium. At the same time, carry out a control test by inoculating a further quantity of the medium with the vaccine together with a quantity of a culture containing approximately 100 leptospirae and incubating at 30 °C: the test is not valid if growth of leptospirae does not occur within 14 days.

3-4. **Potency**. The vaccine complies with the requirements of the test mentioned under Immunogenicity (section 2-2-2.) when administered by a recommended route and method.

04/2013:1955

CANINE PARAINFLUENZA VIRUS VACCINE (LIVE)

Vaccinum parainfluenzae viri canini vivum

1. DEFINITION

Canine parainfluenza virus vaccine (live) is a preparation of a suitable strain of parainfluenza virus of canine origin. This monograph applies to vaccines intended for the active immunisation of dogs against respiratory signs of infection with parainfluenza virus of canine origin.

2. PRODUCTION

2-1. *PREPARATION OF THE VACCINE*

The vaccine virus is grown in cell cultures.

2-2. *SUBSTRATE FOR VIRUS PROPAGATION*

2-2-1. **Cell cultures**. The cell cultures comply with the requirements for cell cultures for production of veterinary vaccines (*5.2.4*).

Vaccines

2-3. *CHOICE OF VACCINE VIRUS*

The vaccine virus is shown to be satisfactory with respect to safety (*5.2.6*) and efficacy (*5.2.7*) for the dogs for which it is intended.

The following tests for safety (section 2-3-1), increase in virulence (section 2-3-2) and immunogenicity (section 2-3-3) may be used during the demonstration of safety and efficacy.

2-3-1. **Safety**. Carry out the test for each route and method of administration to be recommended for vaccination. Use vaccine virus at the least attenuated passage level that will be present in a batch of the vaccine.

For each test, use not fewer than 5 dogs of the minimum age to be recommended for vaccination and that do not have antibodies against parainfluenza virus of canine origin. Administer to each dog a quantity of the vaccine virus equivalent to not less than 10 times the maximum virus titre likely to be contained in 1 dose of the vaccine. Observe the dogs at least daily for at least 14 days.

The vaccine virus complies with the test if no dog shows abnormal local or systemic reactions, signs of disease or dies from causes attributable to the vaccine virus.

2-3-2. **Increase in virulence**. Carry out the test according to general chapter *5.2.6* using dogs 5-7 weeks old, that do not have antibodies against parainfluenza virus of canine origin. If the properties of the vaccine virus allow sequential passage through 5 groups via natural spreading, this method may be used, otherwise passage as described below is carried out.

Administer to each dog of the 1st group by the intranasal route and by a route to be recommended a quantity of the vaccine virus that will allow recovery of virus for the passages described below. Administer the virus by the route to be recommended for vaccination most likely to lead to reversion to virulence. After 3-10 days, prepare a suspension from nasal swabs of each dog. Administer 1 mL of the suspension from the swabs that contain the maximum amount of virus by the intranasal route to each dog of the next group. Carry out this passage operation not fewer than 4 times; verify the presence of the virus at each passage. If the virus is not found at a passage level, repeat the passage by administration to a group of 10 animals.

If the 5th group of animals shows no evidence of an increase in virulence indicative of reversion during the observation period, further testing is not required. Otherwise, carry out an additional safety test and compare the clinical signs and any relevant parameters in a group of at least 8 animals receiving the material used for the 1st passage and another similar group receiving the virus at the final passage level.

The vaccine virus complies with the test if no indication of increased virulence of the virus recovered for the final passage compared with the material used for the 1st passage is observed. If virus is not recovered after an initial passage in 2 animals and a subsequent repeat passage in 10 animals, the vaccine virus also complies with the test.

2-3-3. **Immunogenicity**. A test is carried out for each route and method of administration to be recommended for vaccination, using in each case dogs of the minimum age to be recommended. The quantity of vaccine virus to be administered to each dog is not greater than the minimum virus titre to be stated on the label and the virus is at the most attenuated passage level that will be present in a batch of vaccine.

Use for the test not fewer than 15 dogs that do not have antibodies against parainfluenza virus of canine origin. Vaccinate not fewer than 10 dogs according to the schedule to be recommended. Maintain not fewer than 5 dogs as controls. Challenge each dog after not less than 20-22 days by the intratracheal or intranasal route with a sufficient quantity of a suspension of virulent parainfluenza virus of canine origin. Observe the dogs at least daily for 14 days after challenge. Collect nasal swabs or washings from each dog daily from day 2 to 10 after challenge and test these samples for the presence of excreted virus. Use a scoring system to record the incidence of coughing in each dog.

The test is not valid if more than 1 of the control dogs shows neither coughing nor the excretion of the challenge virus.

The vaccine complies with the test if the scores for coughing or virus excretion for the vaccinated dogs are significantly lower than in the controls.

3. BATCH TESTS

3-1. **Identification**. Carry out an immunofluorescence test in suitable cell cultures, using a monospecific antiserum.

3-2. **Bacteria and fungi**. The vaccine, including where applicable the diluent supplied for reconstitution, complies with the test for sterility prescribed in the monograph *Vaccines for veterinary use (0062)*.

3-3. **Mycoplasmas** (*2.6.7*). The vaccine complies with the test for mycoplasmas.

3-4. **Extraneous agents**. Neutralise the vaccine virus with a suitable monospecific antiserum against parainfluenza virus of canine origin and inoculate into cell cultures known for their susceptibility to viruses pathogenic for the dog. Carry out a passage after 6-8 days and maintain the cultures for a total of 14 days.

The vaccine complies with the test if no cytopathic effect develops and there is no sign of the presence of haemadsorbing agents.

3-5. **Virus titre**. Titrate the vaccine virus in suitable cell cultures. The vaccine complies with the test if one dose contains not less than the minimum virus titre stated on the label.

3-6. **Potency**. The vaccine complies with the requirements of the test prescribed under Immunogenicity (section 2-3-3) when administered by a recommended route and method. It is not necessary to carry out the potency test for each batch of the vaccine if it has been carried out on a representative batch using a vaccinating dose containing not more than the minimum virus titre stated on the label.

04/2013:0795

CANINE PARVOVIROSIS VACCINE (INACTIVATED)

Vaccinum parvovirosis caninae inactivatum

1. DEFINITION

Canine parvovirosis vaccine (inactivated) is a preparation of a suitable strain of canine parvovirus inactivated while maintaining adequate immunogenic properties. This monograph applies to vaccines intended for the active immunisation of dogs against canine parvovirosis.

2. PRODUCTION

2-1. *PREPARATION OF THE VACCINE*

The vaccine virus is grown in cell cultures. The virus harvest is inactivated. The vaccine may be adjuvanted.

2-2. *SUBSTRATE FOR VIRUS PROPAGATION*

2-2-1. **Cell cultures**. The cell cultures comply with the requirements for cell cultures for production of veterinary vaccines (*5.2.4*).

2-3. *CHOICE OF VACCINE COMPOSITION*

The vaccine is shown to be satisfactory with respect to safety (*5.2.6*) and efficacy (*5.2.7*) for the dogs for which it is intended.

The following tests for safety (section 2-3-1) and immunogenicity (section 2-3-2) may be used during the demonstration of safety and efficacy.

2-3-1. **Safety**. Carry out the test for each route and method of administration to be recommended for vaccination. Use a batch of vaccine containing not less than the maximum potency that may be expected in a batch of vaccine.

For each test, use not fewer than 8 dogs not older than the minimum age to be recommended for vaccination and that do not have antibodies against canine parvovirus. Administer to each dog 1 dose of the vaccine. If the schedule to be recommended requires a 2nd dose, administer 1 dose after an interval of at least 14 days. Observe the dogs at least daily for at least 14 days after the last administration.

The vaccine complies with the test if no dog shows abnormal local or systemic reactions or dies from causes attributable to the vaccine.

2-3-2. **Immunogenicity**. A test is carried out for each route and method of administration to be recommended for vaccination using in each case dogs of the minimum age to be recommended. The vaccine administered to each dog is of minimum potency.

Use for the test not fewer than 7 dogs that do not have antibodies against canine parvovirus. Vaccinate not fewer than 5 dogs according to the schedule to be recommended. Maintain not fewer than 2 dogs as controls. Challenge each dog after 20-22 days by the oronasal route with a sufficient quantity of a suspension of pathogenic canine parvovirus. Observe the dogs at least daily for 14 days after challenge. At the end of the observation period, carry out haemagglutination tests for and titration of the virus in the faeces.

The test is not valid if fewer than 100 per cent of the control dogs show notable signs of the disease or leucopenia and excretion of the virus. The vaccine complies with the test if all the vaccinated dogs survive and show no signs of disease nor leucopenia and if the maximum titre of virus excreted in the faeces is less than 1/100 of the geometric mean of the maximum titres found in the controls.

2-4. *MANUFACTURER'S TESTS*

2-4-1. **Residual live virus**. A test for residual live virus is carried out on the bulk harvest of each batch to confirm inactivation of the canine parvovirus. The quantity of inactivated virus harvest used in the test is equivalent to not less than 100 doses of the vaccine. The inactivated viral harvest is inoculated into suitable non-confluent cells; after incubation for 8 days, a subculture is made using trypsinised cells. After incubation for a further 8 days, the cultures are examined for residual live parvovirus by an immunofluorescence test. The immunofluorescence test may be supplemented by a haemagglutination test or other suitable tests on the supernatant of the cell cultures. The inactivated viral harvest complies with the test if no live virus is detected.

3. BATCH TESTS

3-1. **Identification**. When injected into animals that do not have antibodies against canine parvovirus, the vaccine stimulates the production of such antibodies.

3-2. **Bacteria and fungi**. The vaccine, including where applicable the diluent supplied for reconstitution, complies with the test for sterility prescribed in the monograph *Vaccines for veterinary use (0062)*.

3-3. **Potency**. Carry out test 3-3-1 or test 3-3-2.

3-3-1. *Test in guinea-pigs for haemagglutination-inhibiting antibodies*. Use for the test not fewer than 5 guinea-pigs that do not have specific antibodies. Administer to each guinea-pig by the subcutaneous route half of the dose to be recommended. After 14 days, inject again half of the dose to be recommended. 14 days later, collect blood samples and separate the serum. Inactivate each serum by heating at 56 °C for 30 min. To 1 volume of each serum add 9 volumes of a 200 g/L suspension of *light kaolin R* in *phosphate buffered saline pH 7.4 R*. Shake each mixture for 20 min. Centrifuge, collect the supernatant and mix with 1 volume of a concentrated suspension of pig erythrocytes. Allow to stand at 4 °C for 60 min and centrifuge. The dilution of the serum obtained is 1:10. Using each serum, prepare a series of twofold dilutions. To 0.025 mL of each of the latter dilutions add 0.025 mL of a suspension of canine parvovirus antigen containing 4 haemagglutinating units. Allow to stand at 37 °C for 30 min and add 0.05 mL of a suspension of pig erythrocytes containing 30×10^6 cells per millilitre. Allow to stand at 4 °C for 90 min and note the last dilution of serum that still completely inhibits haemagglutination. The vaccine complies with the test if the median antibody titre of the sera collected after the second vaccination is not less than 1/80.

3-3-2. *Test in dogs for virus-neutralising antibodies*. Use for the test not fewer than 2 healthy dogs, 8-12 weeks old, that have antibody titres less than 4 ND_{50} per 0.1 mL of serum, measured by the method described below. Vaccinate each dog according to the recommended schedule. 14 days after vaccination, examine the serum of each dog as follows. Heat the serum at 56 °C for 30 min and prepare serial dilutions using a medium suitable for canine cells. Add to each dilution an equal volume of a virus suspension containing an amount of virus such that when the volume of serum-virus mixture appropriate for the assay system is inoculated into cell cultures, each culture receives approximately 10^4 $CCID_{50}$. Incubate the mixtures at 37 °C for 1 h and inoculate 4 canine cell cultures with a suitable volume of each mixture. Incubate the cell cultures at 37 °C for 7 days, passage and incubate for a further 7 days. Examine the cultures for evidence of specific cytopathic effects and calculate the antibody titre. The vaccine complies with the test if the mean titre is not less than 32 ND_{50} per 0.1 mL of serum. If one dog fails to respond, repeat the test using 2 more dogs and calculate the result as the mean of the titres obtained from all of the 3 dogs that have responded.

04/2013:0964

CANINE PARVOVIROSIS VACCINE (LIVE)

Vaccinum parvovirosis caninae vivum

1. DEFINITION

Canine parvovirosis vaccine (live) is a preparation of a suitable strain of canine parvovirus. This monograph applies to vaccines intended for the active immunisation of dogs against canine parvovirosis.

2. PRODUCTION

2-1. *PREPARATION OF THE VACCINE*

The vaccine virus is grown in cell cultures.

2-2. *SUBSTRATE FOR VIRUS PROPAGATION*

2-2-1. **Cell cultures**. The cell cultures comply with the requirements for cell cultures for production of veterinary vaccines (*5.2.4*).

2-3. *CHOICE OF VACCINE VIRUS*

The vaccine virus is shown to be satisfactory with respect to safety (*5.2.6*) and efficacy (*5.2.7*) for the dogs for which it is intended.

The following tests for safety (section 2-3-1), increase in virulence (section 2-3-2) and immunogenicity (section 2-3-3) may be used during the demonstration of safety and efficacy.

2-3-1. **Safety**. Carry out the test for each route and method of administration to be recommended for vaccination, using in each case dogs of the minimum age to be recommended for vaccination. Use vaccine virus at the least attenuated passage level that will be present in a batch of the vaccine.

2-3-1-1. *General safety*. For each test, use not fewer than 5 dogs that do not have haemagglutination-inhibiting antibodies against canine parvovirus. A count of white blood cells in circulating blood is made on days 4, 2 and 0 before

Vaccines

injection of the vaccine strain. Administer to each dog a quantity of the vaccine virus equivalent to not less than 10 times the maximum virus titre likely to be contained in 1 dose of the vaccine. Observe the dogs at least daily for at least 14 days. A count of white blood cells in circulating blood is made on days 3, 5, 7 and 10 after the injection.

The test is not valid if a diminution in the number of circulating white blood cells greater than 50 per cent of the initial number - determined as the average of the 3 values found before injection of the vaccine strain – is noted. The vaccine virus complies with the test if no dog shows abnormal local or systemic reactions, signs of disease or dies from causes attributable to the vaccine virus and if, for each dog and each blood count, after vaccination, the number of leucocytes is not less than 50 per cent of the initial value.

2-3-1-2. *Effects on the thymus*. For each test, use not fewer than 8 dogs that do not have haemagglutination-inhibiting antibodies against canine parvovirus. Administer to each of not fewer than 4 dogs a quantity of the vaccine virus equivalent to not less than 10 times the maximum virus titre likely to be contained in 1 dose of the vaccine. Maintain not fewer than 4 dogs as controls. Observe the dogs at least daily. After 14 days, euthanise 2 dogs from each group and after 21 days, the remaining dogs from each group. Carry out histological examination of the thymus of each dog.

The vaccine virus complies with the test if there is no more than slight hypoplasia of the thymus after 14 days and no damage is evident after 21 days.

2-3-2. **Increase in virulence**. Carry out the test according to general chapter *5.2.6* using dogs of the minimum age to be recommended for vaccination, that do not have haemagglutination-inhibiting antibodies against canine parvovirus. If the properties of the vaccine virus allow sequential passage through 5 groups via natural spreading, this method may be used, otherwise passage as described below is carried out.

Administer to each dog of the 1st group by a route to be recommended a quantity of the vaccine virus that will allow recovery of virus for the passages described below. Collect the faeces from each dog from the 2nd to the 10th day after administration of the virus, check them for the presence of the virus and pool the faeces containing virus. Administer 1 mL of the suspension of pooled faeces by the oronasal route to each dog of the next group. Carry out this passage operation not fewer than 4 times; verify the presence of the virus at each passage. If the virus is not found at a passage level, repeat the passage by administration to a group of 10 animals.

If the 5th group of animals shows no evidence of an increase in virulence indicative of reversion during the observation period, further testing is not required. Otherwise, carry out an additional safety test and compare the clinical signs and any relevant parameters in a group of at least 8 animals receiving the material used for the 1st passage and another similar group receiving the virus at the final passage level.

The vaccine virus complies with the test if no indication of increased virulence of the virus recovered for the final passage compared with the material used for the 1st passage is observed; account is taken, notably, of the count of white blood cells, of results of histological examination of the thymus and of the titre of excreted virus. If virus is not recovered after an initial passage in 2 animals and a subsequent repeat passage in 10 animals, the vaccine virus also complies with the test.

2-3-3. **Immunogenicity**. A test is carried out for each route and method of administration to be recommended using in each case dogs of the minimum age to be recommended for vaccination. The quantity of vaccine virus to be administered to each dog is not greater than the minimum virus titre to be stated on the label and the virus is at the most attenuated passage level that will be present in a batch of vaccine.

Use for the test not fewer than 7 dogs that do not have haemagglutination-inhibiting antibodies against canine parvovirus. Vaccinate not fewer than 5 dogs. Maintain not fewer than 2 dogs as controls. Challenge each dog after 20-22 days by the oronasal route with a sufficient quantity of a suspension of virulent canine parvovirus. Observe the dogs at least daily for 14 days after challenge. At the end of the observation period, carry out a haemagglutination test for and titration of the virus in the faeces.

The test is not valid if fewer than 100 per cent of the control dogs show typical signs of the disease and/or leucopenia and excretion of the virus.

The vaccine virus complies with the test if all the vaccinated dogs survive and show no sign of disease nor leucopenia and if the maximum titre of virus excreted in the faeces is less than 1/100 of the geometric mean of the maximum titres found in the controls.

3. BATCH TESTS

3-1. **Identification**. The vaccine is grown in a susceptible cell line in a substrate suitable for presenting for fluorescent antibody or immunoperoxidase tests. Suitable controls are included. A proportion of the cells is tested with a monoclonal antibody specific for canine parvovirus and a proportion of the cells tested with a monoclonal antibody specific for feline parvovirus. Canine parvovirus antigen is detected but no feline parvovirus is detected in the cells inoculated with the vaccine.

3-2. **Bacteria and fungi**. The vaccine, including where applicable the diluent supplied for reconstitution, complies with the test for sterility prescribed in the monograph *Vaccines for veterinary use (0062)*.

3-3. **Mycoplasmas** (*2.6.7*). The vaccine complies with the test for mycoplasmas.

3-4. **Extraneous agents**. Neutralise the vaccine virus with a suitable monospecific antiserum against canine parvovirus and inoculate into cell cultures known for their susceptibility to viruses pathogenic for the dog.

The vaccine complies with the test if no cytopathic effect develops and there is no sign of haemagglutinating or haemadsorbing agents and no other sign of the presence of extraneous viruses.

3-5. **Virus titre**. Titrate the vaccine virus by inoculation into suitable cell cultures. The vaccine complies with the test if one dose contains not less than the minimum virus titre stated on the label.

3-6. **Potency**. The vaccine complies with the requirements of the test prescribed under Immunogenicity (section 2-3-3) when administered by a recommended route and method. It is not necessary to carry out the potency test for each batch of the vaccine if it has been carried out on a representative batch using a vaccinating dose containing not more than the minimum virus titre stated on the label.

04/2013:0360

CLOSTRIDIUM BOTULINUM VACCINE FOR VETERINARY USE

Vaccinum Clostridii botulini ad usum veterinarium

1. DEFINITION

Clostridium botulinum vaccine for veterinary use is prepared from liquid cultures of suitable strains of *Clostridium botulinum* type C or type D or a mixture of these types. The whole culture or its filtrate or a mixture of the two is inactivated to eliminate its toxicity while maintaining adequate immunogenic properties. This monograph applies to vaccines intended for active immunisation of animals against botulism.

2. PRODUCTION

2-1. *PREPARATION OF THE VACCINE*

C. botulinum used for production is grown in an appropriate liquid medium.

The preparation may be adsorbed, precipitated or concentrated. It may be treated with a suitable adjuvant and may be freeze-dried.

2-2. *CHOICE OF VACCINE COMPOSITION*

The vaccine is shown to be satisfactory with respect to safety (*5.2.6*) and efficacy (*5.2.7*) for the animals for which it is intended.

The following test for safety (section 2-2-1) may be used during the demonstration of safety.

2-2-1. **Safety**. Carry out the tests for each route and method of administration to be recommended for vaccination and where applicable, in animals of each category for which the vaccine is intended, using in each case animals not older than the minimum age to be recommended for vaccination. Use a batch of vaccine containing not less than the maximum potency that may be expected in a batch of vaccine.

For each test, use not fewer than 8 animals that do not have antibodies against *C. botulinum*. Administer to each animal 1 dose of the vaccine. If the schedule to be recommended requires a 2nd dose, administer another dose after an interval of at least 14 days. Observe the animals at least daily until 14 days after the last administration.

The vaccine complies with the test if no animal shows abnormal local or systemic reactions or dies from causes attributable to the vaccine.

2-3. *MANUFACTURER'S TESTS*

2-3-1. **Batch potency test**. It is not necessary to carry out the potency test (section 3-4) for each batch of the vaccine if it has been carried out using a batch of vaccine with a minimum potency. Where the test is not carried out, an alternative validated method is used, the criteria for acceptance being set with reference to a batch of vaccine that has given satisfactory results in the test described under Potency.

3. BATCH TESTS

The identification, the tests and the determination of potency apply to the liquid preparation and to the freeze-dried preparation reconstituted as stated on the label.

3-1. **Identification**. When injected into a healthy animal free from antibodies against the type or types of *C. botulinum* from which the vaccine was prepared, the vaccine stimulates the production of such antibodies.

3-2. **Bacteria and fungi**. The vaccine, including where applicable the diluent supplied for reconstitution, complies with the test for sterility prescribed in the monograph *Vaccines for veterinary use (0062)*.

3-3. **Residual toxicity**. Inject 0.5 mL of the vaccine by the subcutaneous route into each of 5 mice, each weighing 17-22 g. Observe the animals at least daily for 7 days.

The vaccine complies with the test if no animal shows notable signs of disease or dies from causes attributable to the vaccine.

3-4. **Potency**. Use for the test healthy white mice from a uniform stock, each weighing 18-20 g. Use as challenge dose a quantity of a toxin of *C. botulinum* of the same type as that used in the preparation of the vaccine corresponding to 25 times the paralytic dose 50 per cent, a paralytic dose 50 per cent being the quantity of toxin that, when injected by the intraperitoneal route into mice, causes paralysis in 50 per cent of the animals within an observation period of 7 days. If 2 types of *C. botulinum* have been used in the preparation of the vaccine, carry out the potency determination for each. Dilute the vaccine to be examined 8-fold using a 9 g/L solution of *sodium chloride R*. Inject 0.2 mL of the dilution subcutaneously into each of 20 mice. After 21 days, inject the challenge dose by the intraperitoneal route into each of the vaccinated mice and into each of 10 control mice. Observe the mice for 7 days and record the number of animals that show signs of botulism.

The test is not valid unless all the control mice show signs of botulism during the observation period. The vaccine complies with the test if not fewer than 80 per cent of the vaccinated mice are protected.

4. LABELLING

The label states:

- the type or types of *C. botulinum* from which the vaccine has been prepared;
- whether the preparation is a toxoid or a vaccine prepared from a whole inactivated culture or a mixture of the two.

04/2013:0361

CLOSTRIDIUM CHAUVOEI VACCINE FOR VETERINARY USE

Vaccinum Clostridii chauvoei ad usum veterinarium

1. DEFINITION

Clostridium chauvoei vaccine for veterinary use is prepared from liquid cultures of one or more suitable strains of *Clostridium chauvoei*. The whole culture is inactivated to eliminate its toxicity while maintaining adequate immunogenic properties. This monograph applies to vaccines intended for active immunisation of animals against disease caused by *C. chauvoei*.

2. PRODUCTION

2-1. *PREPARATION OF THE VACCINE*

C. chauvoei used for production is grown in an appropriate liquid medium. Inactivated cultures may be treated with a suitable adjuvant.

2-2. *CHOICE OF VACCINE COMPOSITION*

The vaccine is shown to be satisfactory with respect to safety (*5.2.6*) and efficacy (*5.2.7*) for the animals for which it is intended.

The following test for safety (section 2-2-1) may be used during the demonstration of safety.

2-2-1. **Safety**. Carry out the tests for each route and method of administration to be recommended for vaccination and where applicable, in animals of each category for which the vaccine is intended, using in each case animals not older than the minimum age to be recommended for vaccination. Use a batch of vaccine containing not less than the maximum potency that may be expected in a batch of vaccine.

For each test, use not fewer than 8 animals that do not have antibodies against *C. chauvoei*. Administer to each animal 1 dose of the vaccine. If the schedule to be recommended requires a 2nd dose, administer another dose after an interval of at least 14 days. Observe the animals at least daily until 14 days after the last administration.

The vaccine complies with the test if no animal shows abnormal local or systemic reactions or dies from causes attributable to the vaccine.

3. BATCH TESTS

3-1. **Identification**. The vaccine protects susceptible animals against infection with *C. chauvoei*. The potency test may also serve for identification.

3-2. **Bacteria and fungi**. The vaccine, including where applicable the diluent supplied for reconstitution, complies with the test for sterility prescribed in the monograph *Vaccines for veterinary use (0062)*.

3-3. **Potency**. Use for the test not fewer than 10 healthy guinea-pigs, each weighing 350-450 g. Administer to each guinea-pig by the subcutaneous route a quantity of the vaccine not greater than the minimum dose stated on the label as the 1st dose. After 28 days, administer to the same animals a quantity of the vaccine not greater than the minimum dose stated on the label as the 2nd dose. 14 days after the 2nd vaccination, inoculate by the intramuscular route each of the vaccinated guinea-pigs and each of 5 control animals with a suitable quantity of a virulent culture, or of a spore suspension, of *C. chauvoei*, activated if necessary with an activating agent such as calcium chloride.

The vaccine complies with the test if not more than 10 per cent of the vaccinated guinea-pigs die from *C. chauvoei* infection within 5 days and all the control animals die from *C. chauvoei* infection within 48 h of challenge or within 72 h if a spore suspension was used for the challenge. If more than 10 per cent but not more than 20 per cent of the vaccinated animals die, repeat the test. The vaccine complies with the test if not more than 10 per cent of the 2nd group of vaccinated animals die within 5 days and all of the 2nd group of control animals die within 48 h of challenge or within 72 h if a spore suspension was used for the challenge. To avoid unnecessary suffering following virulent challenge, moribund animals are euthanised and are then considered to have died from *C. chauvoei* infection.

04/2013:0362

CLOSTRIDIUM NOVYI (TYPE B) VACCINE FOR VETERINARY USE

Vaccinum Clostridii novyi B ad usum veterinarium

Vaccines

1. DEFINITION

Clostridium novyi (type B) vaccine for veterinary use is prepared from a liquid culture of a suitable strain of *Clostridium novyi* (type B).

The whole culture or its filtrate or a mixture of the two is inactivated to eliminate its toxicity while maintaining adequate immunogenic properties. This monograph applies to vaccines intended for active immunisation of animals and/or to protect passively their progeny against disease caused by *C. novyi* (type B).

2. PRODUCTION

2-1. *PREPARATION OF THE VACCINE*

C. novyi (type B) used for production is grown in an appropriate liquid medium. Toxoids and/or inactivated cultures may be treated with a suitable adjuvant, after concentration if necessary.

2-2. *CHOICE OF VACCINE COMPOSITION*

The vaccine is shown to be satisfactory with respect to safety (*5.2.6*) and efficacy (*5.2.7*) for the animals for which it is intended. For the latter, it shall be demonstrated that for each target species the vaccine, when administered according to the schedule to be recommended, stimulates an immune response (for example, induction of antibodies) consistent with the claims made for the product.

The following test for safety (section 2-2-1) may be used during the demonstration of safety.

2-2-1. **Safety**. Carry out the tests for each route and method of administration to be recommended for vaccination and where applicable, in animals of each category for which the vaccine is intended, using in each case animals not older than the minimum age to be recommended for vaccination. Use a batch of vaccine containing not less than the maximum potency that may be expected in a batch of vaccine.

For each test, use not fewer than 8 animals that do not have antibodies against *C. novyi* (type B). Administer to each animal 1 dose of the vaccine. If the schedule to be recommended requires a 2nd dose, administer another dose after an interval of at least 14 days. Observe the animals at least daily until 14 days after the last administration.

The vaccine complies with the test if no animal shows abnormal local or systemic reactions or dies from causes attributable to the vaccine. If the test is carried out in pregnant animals, no adverse effects on gestation or the offspring are noted.

2-3. *MANUFACTURER'S TESTS*

2-3-1. **Residual toxicity**. A test for detoxification is carried out immediately after the detoxification process and, when there is risk of reversion, a 2nd test is carried out at as late a stage as possible during the production process. The test for residual toxicity (section 3-3) may be omitted by the manufacturer.

2-3-2. **Batch potency test**. It is not necessary to carry out the potency test (section 3-4) for each batch of vaccine if it has been carried out using a batch of vaccine with a minimum potency.

Where the test is not carried out, an alternative validated method is used, the criteria for acceptance being set with reference to a batch of vaccine that has given satisfactory results in the test described under Potency and that has been shown to be satisfactory with respect to immunogenicity in the target species. The following test may be used after a satisfactory correlation with the test under Potency (section 3-4) has been established.

Vaccinate rabbits as described under Potency and prepare sera. Determine the level of antibodies against the alpha toxin of *C. novyi* in the individual sera by a suitable method such as an immunochemical method (*2.7.1*) or neutralisation in cell cultures. Use a homologous reference serum calibrated in International Units of *C. novyi* alpha antitoxin. *Clostridia (multicomponent) rabbit antiserum BRP* is suitable for use as a reference serum.

The vaccine complies with the test if the level of antibodies is not less than that found for a batch of vaccine that has given satisfactory results in the test described under Potency and that has been shown to be satisfactory with respect to immunogenicity in the target species.

3. BATCH TESTS

3-1. **Identification**. When injected into animals that do not have novyi alpha antitoxin, the vaccine stimulates the formation of such antitoxins.

3-2. **Bacteria and fungi**. The vaccine, including where applicable the diluent supplied for reconstitution, complies with the test for sterility prescribed in the monograph *Vaccines for veterinary use (0062)*.

3-3. **Residual toxicity**. Administer 0.5 mL of the vaccine by the subcutaneous route into each of 5 mice, each weighing 17-22 g. Observe the animals at least daily for 7 days.

The vaccine complies with the test if no animal shows notable signs of disease or dies from causes attributable to the vaccine.

3-4. **Potency**. Use for the test not fewer than 10 healthy rabbits, 3-6 months old. Administer to each rabbit by the subcutaneous route a quantity of vaccine not greater than the minimum dose stated on the label as the 1st dose. After 21-28 days, administer to the same animals a quantity of the

vaccine not greater than the minimum dose stated on the label as the 2nd dose. 10-14 days after the 2nd injection, bleed the rabbits and pool the sera.

The vaccine complies with the test if the potency of the pooled sera is not less than 3.5 IU/mL.

The International Unit is the specific neutralising activity for *C. novyi* alpha toxin contained in a stated amount of the International Standard, which consists of a quantity of dried immune horse serum. The equivalence in International Units of the International Standard is stated by the World Health Organization.

The potency of the pooled sera obtained from the rabbits is determined by comparing the quantity necessary to protect mice or other suitable animals against the toxic effects of a fixed dose of *C. novyi* alpha toxin with the quantity of a reference preparation of Clostridium novyi alpha antitoxin, calibrated in International Units, necessary to give the same protection. For this comparison, a suitable preparation of *C. novyi* alpha toxin for use as a test toxin is required. The dose of the test toxin is determined in relation to the reference preparation; the potency of the serum to be examined is determined in relation to the reference preparation using the test toxin.

Clostridia (multicomponent) rabbit antiserum BRP is suitable for use as a reference serum.

3-4-1. *Preparation of test toxin.* Prepare the test toxin from a sterile filtrate of an approximately 5-day culture in liquid medium of *C. novyi* type B and dry by a suitable method. Select the test toxin by determining for mice the L+/10 dose and the LD_{50}, the observation period being 72 h.

A suitable alpha toxin contains not less than 1 L+/10 dose in 0.05 mg and not less than 10 LD_{50} in each L+/10 dose.

3-4-2. *Determination of test dose of toxin.* Prepare a solution of the reference preparation in a suitable liquid so that it contains 1 IU/mL. Prepare a solution of the test toxin in a suitable liquid so that 1 mL contains a precisely known amount such as 1 mg. Prepare mixtures of the solution of the reference preparation and the solution of the test toxin such that each mixture contains 1.0 mL of the solution of the reference preparation (1 IU), one of a series of graded volumes of the solution of the test toxin and sufficient of a suitable liquid to bring the total volume to 2.0 mL. Allow the mixtures to stand at room temperature for 60 min. Using not fewer than 2 mice, each weighing 17-22 g, for each mixture, inject a dose of 0.2 mL by the intramuscular or the subcutaneous route into each mouse. Observe the mice for 72 h. If all the mice die, the amount of toxin present in 0.2 mL of the mixture is in excess of the test dose. If none of the mice die, the amount of toxin present in 0.2 mL of the mixture is less than the test dose. Prepare fresh mixtures such that 2.0 mL of each mixture contains 1.0 mL of the solution of the reference preparation (1 IU) and one of a series of graded volumes of the solution of the test toxin separated from each other by steps of not more than 20 per cent and covering the expected end-point. Allow the mixtures to stand at room temperature for 60 min. Using not fewer than 2 mice for each mixture, inject a dose of 0.2 mL by the intramuscular or the subcutaneous route into each mouse. Observe the mice for 72 h. Repeat the determination at least once and combine the results of the separate tests that have been made with mixtures of the same composition so that a series of totals is obtained, each total representing the mortality due to a mixture of a given composition.

The test dose of toxin is the amount present in 0.2 mL of that mixture which causes the death of one half of the total number of mice injected with it.

3-4-3. *Determination of the potency of the serum obtained from rabbits*

Preliminary test. Dissolve a quantity of the test toxin in a suitable liquid so that 1.0 mL contains 10 times the test dose (solution of the test toxin). Prepare a series of mixtures of the solution of the test toxin and of the serum to be examined such that each mixture contains 1.0 mL of the solution of the test toxin, one of a series of graded volumes of the serum to be examined and sufficient of a suitable liquid to bring the final volume to 2.0 mL. Allow the mixtures to stand at room temperature for 60 min. Using not fewer than 2 mice for each mixture, inject a dose of 0.2 mL by the intramuscular or the subcutaneous route into each mouse. Observe the mice for 72 h. If none of the mice die, 0.2 mL of the mixture contains more than 0.1 IU. If all the mice die, 0.2 mL of the mixture contains less than 0.1 IU.

Final test. Prepare a series of mixtures of the solution of the test toxin and the serum to be examined such that 2.0 mL of each mixture contains 1.0 mL of the solution of the test toxin and one of a series of graded volumes of the serum to be examined, separated from each other by steps of not more than 20 per cent and covering the expected end-point as determined by the preliminary test. Prepare further mixtures of the solution of the test toxin and of the solution of the reference preparation such that 2.0 mL of each mixture contains 1.0 mL of the solution of the test toxin and one of a series of graded volumes of the solution of the reference preparation, in order to confirm the test dose of the toxin. Allow the mixtures to stand at room temperature for 60 min. Using not fewer than 2 mice for each mixture, proceed as described in the preliminary test.

The test mixture that contains 0.1 IU in 0.2 mL is that mixture which kills the same or almost the same number of mice as the reference mixture containing 0.1 IU in 0.2 mL. Repeat the determination at least once and calculate the average of all valid estimates. The test is valid only if the reference preparation gives a result within 20 per cent of the expected value.

The confidence limits (P = 0.95) have been estimated to be:

- 85 per cent and 114 per cent when 2 animals per dose are used;
- 91.5 per cent and 109 per cent when 4 animals per dose are used;
- 93 per cent and 108 per cent when 6 animals per dose are used.

4. LABELLING

The label states:

- whether the product is a toxoid, a vaccine prepared from a whole inactivated culture or a mixture of the two;
- for each target species, the immunising effect produced (for example, antibody production, protection against signs of disease or infection).

04/2013:0363

CLOSTRIDIUM PERFRINGENS VACCINE FOR VETERINARY USE

Vaccinum Clostridii perfringentis ad usum veterinarium

1. DEFINITION

Clostridium perfringens vaccine for veterinary use is prepared from liquid cultures of suitable strains of *Clostridium perfringens* type B, *C. perfringens* type C or *C. perfringens* type D or a mixture of these types.

The whole cultures or their filtrates or a mixture of the two are inactivated to eliminate their toxicity while maintaining adequate immunogenic properties. This monograph applies to vaccines intended for active immunisation of animals and/or to protect passively their progeny against disease caused by *C. perfringens*.

Vaccines

2. PRODUCTION

2-1. *PREPARATION OF THE VACCINE*

C. perfringens used for production is grown in an appropriate liquid medium. Toxoids and/or inactivated cultures may be treated with a suitable adjuvant.

2-2. *CHOICE OF VACCINE COMPOSITION*

The vaccine is shown to be satisfactory with respect to safety (*5.2.6*) and efficacy (*5.2.7*) for the animals for which it is intended. For the latter, it shall be demonstrated that for each target species the vaccine, when administered according to the schedule to be recommended, stimulates an immune response (for example, induction of antibodies) consistent with the claims made for the product.

The following test for safety (section 2-2-1) may be used during the demonstration of safety.

2-2-1. **Safety**. Carry out the tests for each route and method of administration to be recommended for vaccination and where applicable, in animals of each category for which the vaccine is intended, using in each case animals not older than the minimum age to be recommended for vaccination. Use a batch of vaccine containing not less than the maximum potency that may be expected in a batch of vaccine.

For each test, use not fewer than 8 animals that do not have antibodies against *C. perfringens*. Administer to each animal 1 dose of the vaccine. If the schedule to be recommended requires a 2nd dose, administer another dose after an interval of at least 14 days. Observe the animals at least daily until 14 days after the last administration.

The vaccine complies with the test if no animal shows abnormal local or systemic reactions or dies from causes attributable to the vaccine. If the test is carried out in pregnant animals, no adverse effects on gestation or the offspring are noted.

2-3. *MANUFACTURER'S TESTS*

2-3-1. **Residual toxicity**. A test for detoxification is carried out immediately after the detoxification process and, when there is risk of reversion, a 2nd test is carried out at as late a stage as possible during the production process. The test for residual toxicity (section 3-3) may be omitted by the manufacturer.

2-3-2. **Batch potency test**. It is not necessary to carry out the potency test (section 3-4) for each batch of vaccine if it has been carried out using a batch of vaccine with a minimum potency. Where the test is not carried out, an alternative validated method is used, the criteria for acceptance being set with reference to a batch of vaccine that has given satisfactory results in the test described under Potency and that has been shown to be satisfactory with respect to immunogenicity in the target species. The following test may be used after a satisfactory correlation with the test under Potency (section 3-4) has been established.

Vaccinate rabbits as described under Potency and prepare sera. Determine the level of antibodies against the beta and/or epsilon toxins of *C. perfringens* in the individual sera by a suitable method such as an immunochemical method (*2.7.1*) or neutralisation in cell cultures. Use a homologous reference serum calibrated in International Units of *C. perfringens* beta and/or epsilon antitoxin. *Clostridia (multicomponent) rabbit antiserum BRP* is suitable for use as a reference serum.

The vaccine complies with the test if the level or levels of antibodies are not less than that found for a batch of vaccine that has given satisfactory results in the test described under Potency and that has been shown to be satisfactory with respect to immunogenicity in the target species.

3. BATCH TESTS

3-1. **Identification**

Type B. When injected into animals that do not have beta and epsilon antitoxins, the vaccine stimulates the formation of such antitoxins.

Type C. When injected into animals that do not have beta antitoxin, the vaccine stimulates the formation of such antitoxin.

Type D. When injected into animals that do not have epsilon antitoxin, the vaccine stimulates the formation of such antitoxin.

3-2. **Bacteria and fungi**. The vaccine, including where applicable the diluent supplied for reconstitution, complies with the test for sterility prescribed in the monograph *Vaccines for veterinary use (0062)*.

3-3. **Residual toxicity**. Administer 0.5 mL of the vaccine by the subcutaneous route to each of 5 mice, each weighing 17-22 g. Observe the mice at least daily for 7 days.

The vaccine complies with the test if no animal shows notable signs of disease or dies from causes attributable to the vaccine.

3-4. **Potency**. Use for the test not fewer than 10 healthy rabbits, 3-6 months old. Administer to each rabbit by the subcutaneous route a quantity of vaccine not greater than the minimum dose stated on the label as the 1st dose. After 21-28 days, administer to the same animals a quantity of the vaccine not greater than the minimum dose stated on the label as the 2nd dose. 10-14 days after the 2nd injection, bleed the rabbits and pool the sera.

Type B. The vaccine complies with the test if the potency of the pooled sera is not less than 10 IU of beta antitoxin and not less than 5 IU of epsilon antitoxin per millilitre.

Type C. The vaccine complies with the test if the potency of the pooled sera is not less than 10 IU of beta antitoxin per millilitre.

Type D. The vaccine complies with the test if the potency of the pooled sera is not less than 5 IU of epsilon antitoxin per millilitre.

3-4-1. *International standard for Clostridium perfringens beta antitoxin*

The International Unit is the specific neutralising activity for *C. perfringens* beta toxin contained in a stated amount of the International Standard, which consists of a quantity of dried immune horse serum. The equivalence in International Units of the International Standard is stated by the World Health Organization.

3-4-2. *International standard for Clostridium perfringens epsilon antitoxin*

The International Unit is the specific neutralising activity for *C. perfringens* epsilon toxin contained in a stated amount of the International Standard, which consists of a quantity of dried immune horse serum. The equivalence in International Units of the International Standard, is stated by the World Health Organization.

The potency of the pooled sera obtained from the rabbits is determined by comparing the quantity necessary to protect mice or other suitable animals against the toxic effects of a fixed dose of *C. perfringens* beta toxin or *C. perfringens* epsilon toxin with the quantity of a reference preparation of Clostridium perfringens beta antitoxin or Clostridium perfringens epsilon antitoxin, as appropriate, calibrated in International Units, necessary to give the same protection. For this comparison, a suitable preparation of *C. perfringens* beta or epsilon toxin for use as a test toxin is required. The dose of the test toxin is determined in relation to the appropriate reference preparation; the potency of the serum to be examined is determined in relation to the appropriate reference preparation using the appropriate test toxin.

Clostridia (multicomponent) rabbit antiserum BRP is suitable for use as a reference serum.

3-4-3. *Preparation of test toxin.* Prepare the test toxin from a sterile filtrate of an early culture in liquid medium of *C. perfringens* type B, type C or type D as appropriate and dry by a suitable method. Use a beta or epsilon toxin as appropriate. Select the test toxin by determining for mice the L+ and the LD_{50} for the beta toxin and the L+/10 dose and the LD_{50} for the epsilon toxin, the observation period being 72 h.

A suitable beta toxin contains not less than 1 L+ in 0.2 mg and not less than 25 LD_{50} in 1 L+ dose. A suitable epsilon toxin contains not less than 1 L+/10 dose in 0.005 mg and not less than 20 LD_{50} in 1 L+/10 dose.

3-4-4. *Determination of test dose of toxin.* Prepare a solution of the reference preparation in a suitable liquid so that it contains 5 IU/mL for Clostridium perfringens beta antitoxin and 0.5 IU/mL for Clostridium perfringens epsilon antitoxin. Prepare a solution of the test toxin in a suitable liquid so that 1 mL contains a precisely known amount such as 10 mg for beta toxin and 1 mg for epsilon toxin. Prepare mixtures of the solution of the reference preparation and the solution of the test toxin such that each contains 2.0 mL of the solution of the reference preparation, one of a series of graded volumes of the solution of the test toxin and sufficient of a suitable liquid to bring the total volume to 5.0 mL. Allow the mixtures to stand at room temperature for 30 min. Using not fewer than 2 mice, each weighing 17-22 g, for each mixture, inject a dose of 0.5 mL by the intravenous or the intraperitoneal route into each mouse. Observe the mice for 72 h. If all the mice die, the amount of toxin present in 0.5 mL of the mixture is in excess of the test dose. If none of the mice die the amount of toxin present in 0.5 mL of the mixture is less than the test dose. Prepare fresh mixtures such that 5.0 mL of each mixture contains 2.0 mL of the solution of the reference preparation and one of a series of graded volumes of the solution of the test toxin separated from each other by steps of not more than 20 per cent and covering the expected end-point. Allow the mixtures to stand at room temperature for 30 min. Using not fewer than 2 mice for each mixture, inject a dose of 0.5 mL by the intravenous or the intraperitoneal route into each mouse. Observe the mice for 72 h. Repeat the determination at least once and add together the results of the separate tests that have been made with mixtures of the same composition so that a series of totals is obtained, each total representing the mortality due to a mixture of given composition.

The test dose of toxin is the amount present in 0.5 mL of that mixture which causes the death of one half of the total number of mice injected with it.

3-4-5. *Determination of the potency of the serum obtained from rabbits*

Preliminary test. Dissolve a quantity of the test toxin in a suitable liquid so that 2.0 mL contains 10 times the test dose (solution of the test toxin). Prepare a series of mixtures of the solution of the test toxin and of the serum to be examined such that each contains 2.0 mL of the solution of the test toxin, one of a series of graded volumes of the serum to be examined and sufficient of a suitable liquid to bring the final volume to 5.0 mL. Allow the mixtures to stand at room temperature for 30 min. Using not fewer than 2 mice for each mixture, inject a dose of 0.5 mL by the intravenous or the intraperitoneal route into each mouse. Observe the mice for 72 h. If none of the mice die, 0.5 mL of the mixture contains more than 1 IU of beta antitoxin or 0.1 IU of epsilon antitoxin. If all the mice die, 0.5 mL of the mixture contains less than 1 IU of beta antitoxin or 0.1 IU of epsilon antitoxin.

Final test. Prepare a series of mixtures of the solution of the test toxin and the serum to be examined such that 5.0 mL of each mixture contains 2.0 mL of the solution of the test toxin and one of a series of graded volumes of the serum to be examined separated from each other by steps of not more than 20 per cent and covering the expected end-point as determined by the preliminary test. Prepare further mixtures of the solution of the test toxin and of the solution of the reference preparation such that 5.0 mL of each mixture contains 2.0 mL of the solution of the test toxin and one of a series of graded volumes of the solution of the reference preparation, in order to confirm the test dose of the toxin. Allow the mixtures to stand at room temperature for 30 min. Using not fewer than 2 mice for each mixture proceed as described in the preliminary test.

Beta antitoxin. The test mixture that contains 1 IU in 0.5 mL is that mixture which kills the same or almost the same number of mice as the reference mixture containing 1 IU in 0.5 mL.

Epsilon antitoxin. The test mixture that contains 0.1 IU in 0.5 mL is that mixture which kills the same or almost the same number of mice as the reference mixture containing 0.1 IU in 0.5 mL. Repeat the determination at least once and calculate the average of all valid estimates. The test is valid only if the reference preparation gives a result within 20 per cent of the expected value.

The confidence limits ($P = 0.95$) have been estimated to be:

- 85 per cent and 114 per cent when 2 animals per dose are used;
- 91.5 per cent and 109 per cent when 4 animals per dose are used;
- 93 per cent and 108 per cent when 6 animals per dose are used.

4. LABELLING

The label states:

- whether the preparation is a toxoid or a vaccine prepared from a whole inactivated culture or a mixture of the two;
- for each target species, the immunising effect produced (for example, antibody production, protection against signs of disease or infection).

04/2013:0364

CLOSTRIDIUM SEPTICUM VACCINE FOR VETERINARY USE

Vaccinum Clostridii septici ad usum veterinarium

1. DEFINITION

Clostridium septicum vaccine for veterinary use is prepared from a liquid culture of a suitable strain of *Clostridium septicum*.

The whole culture or its filtrate or a mixture of the two is inactivated to eliminate its toxicity while maintaining adequate immunogenic properties. This monograph applies to vaccines intended for active immunisation of animals and/or to protect passively their progeny against disease caused by *C. septicum*.

2. PRODUCTION

2-1. *PREPARATION OF THE VACCINE*

C. septicum used for production is grown in an appropriate liquid medium. Toxoid and/or inactivated cultures may be treated with a suitable adjuvant.

2-2. *CHOICE OF VACCINE COMPOSITION*

The vaccine is shown to be satisfactory with respect to safety (*5.2.6*) and efficacy (*5.2.7*) for the animals for which it is intended. For the latter, it shall be demonstrated that for each target species the vaccine, when administered according to the schedule to be recommended, stimulates an immune response (for example, induction of antibodies) consistent with the claims made for the product.

The following test for safety (section 2-2-1) may be used during the demonstration of safety.

2-2-1. **Safety**. Carry out the tests for each route and method of administration to be recommended for vaccination and where applicable, in animals of each category for which the

Vaccines

vaccine is intended, using in each case animals not older than the minimum age to be recommended for vaccination. Use a batch of vaccine containing not less than the maximum potency that may be expected in a batch of vaccine.

For each test, use not fewer than 8 animals that do not have antibodies against *C. septicum*. Administer to each animal 1 dose of the vaccine. If the schedule to be recommended requires a 2nd dose, administer another dose after an interval of at least 14 days. Observe the animals at least daily until 14 days after the last administration.

The vaccine complies with the test if no animal shows abnormal local or systemic reactions or dies from causes attributable to the vaccine. If the test is carried out in pregnant animals, no adverse effets on gestation or the offspring are noted.

2-3. *MANUFACTURER'S TESTS*

2-3-1. **Residual toxicity**. A test for detoxification is carried out immediately after the detoxification process and, when there is risk of reversion, a 2nd test is carried out at as late a stage as possible during the production process. The test for residual toxicity (section 3-3) may be omitted by the manufacturer.

2-3-2. **Batch potency test**. It is not necessary to carry out the potency test (section 3-4) for each batch of vaccine if it has been carried out using a batch of vaccine with a minimum potency. Where the test is not carried out, an alternative validated method is used, the criteria for acceptance being set with reference to a batch of vaccine that has given satisfactory results in the test described under Potency and that has been shown to be satisfactory with respect to immunogenicity in the target species. The following test may be used after a satisfactory correlation with the test under Potency (section 3-4) has been established.

Vaccinate rabbits as described under Potency and prepare sera. Determine the level of antibodies against the toxin of *C. septicum* in the individual sera by a suitable method such as an immunochemical method (*2.7.1*) or neutralisation in cell cultures. Use a homologous reference serum calibrated in International Units of *C. septicum* antitoxin. *Clostridia (multicomponent) rabbit antiserum BRP* is suitable for use as a reference serum. The vaccine complies with the test if the level of antibodies is not less than that found for a batch of vaccine that has given satisfactory results in the test described under Potency and that has been shown to be satisfactory with respect to immunogenicity in the target species.

3. BATCH TESTS

3-1. **Identification**. When injected into animals that do not have *C. septicum* antitoxin, the vaccine stimulates the formation of such antitoxin.

3-2. **Bacteria and fungi**. The vaccine, including where applicable the diluent supplied for reconstitution, complies with the test for sterility prescribed in the monograph *Vaccines for veterinary use (0062)*.

3-3. **Residual toxicity**. Inject 0.5 mL of the vaccine by the subcutaneous route into each of 5 mice, each weighing 17-22 g. Observe the mice at least daily for 7 days.

The vaccine complies with the test if no animal shows notable signs of disease or dies from causes attributable to the vaccine.

3-4. **Potency**. Use for the test not fewer than 10 healthy rabbits, 3-6 months old. Administer to each rabbit by the subcutaneous route a quantity of vaccine not greater than the minimum dose stated on the label as the 1st dose. After 21-28 days, administer to the same animals a quantity of the vaccine not greater than the minimum dose stated on the label as the 2nd dose. 10-14 days after the 2nd injection, bleed the rabbits and pool the sera.

The vaccine complies with the test if the potency of the pooled sera is not less than 2.5 IU/mL.

The International Unit is the specific neutralising activity for *C. septicum* toxin contained in a stated amount of the International Standard, which consists of a quantity of dried immune horse serum. The equivalence in International Units of the International Standard is stated by the World Health Organization.

The potency of the pooled sera obtained from the rabbits is determined by comparing the quantity necessary to protect mice or other suitable animals against the toxic effects of a dose of *C. septicum* toxin with the quantity of a reference preparation of Clostridium septicum antitoxin, calibrated in International Units, necessary to give the same protection. For this comparison, a suitable preparation of *C. septicum* toxin for use as a test toxin is required. The dose of the test toxin is determined in relation to the reference preparation; the potency of the serum to be examined is determined in relation to the reference preparation using the test toxin.

Clostridia (multicomponent) rabbit antiserum BRP is suitable for use as a reference serum.

3-4-1. *Preparation of test toxin*. Prepare the test toxin from a sterile filtrate of a 1- to 3-day culture of *C. septicum* in liquid medium and dry by a suitable method. Select the test toxin by determining for mice the L+/5 dose and the LD_{50}, the observation period being 72 h.

A suitable toxin contains not less than 1 L+/5 dose in 1.0 mg and not less than 10 LD_{50} in each L+/5 dose.

3-4-2. *Determination of test dose of toxin*. Prepare a solution of the reference preparation in a suitable liquid so that it contains 1.0 IU/mL. Prepare a solution of the test toxin in a suitable liquid so that 1 mL contains a precisely known amount, such as 4 mg. Prepare mixtures of the solution of the reference preparation and the solution of the test toxin such that each mixture contains 2.0 mL of the solution of the reference preparation (2 IU), one of a series of graded volumes of the solution of the test toxin and sufficient of a suitable liquid to bring the total volume to 5.0 mL. Allow the mixtures to stand at room temperature for 60 min. Using not fewer than 2 mice, each weighing 17-22 g, for each mixture, inject a dose of 0.5 mL by the intravenous or the intraperitoneal route into each mouse. Observe the mice for 72 h. If all the mice die, the amount of toxin present in 0.5 mL of the mixture is in excess of the test dose. If none of the mice die, the amount of toxin present in 0.5 mL of the mixture is less than the test dose. Prepare fresh mixtures such that 5.0 mL of each mixture contains 2.0 mL of the reference preparation (2 IU) and one of a series of graded volumes of the solution of the test toxin separated from each other by steps of not more than 20 per cent and covering the expected end-point. Allow the mixtures to stand at room temperature for 60 min. Using not fewer than 2 mice for each mixture, inject a dose of 0.5 mL by the intravenous or the intraperitoneal route into each mouse. Observe the mice for 72 h. Repeat the determination at least once and add together the results of the separate tests that have been made with mixtures of the same composition so that a series of totals is obtained, each total representing the mortality due to a mixture of a given composition.

The test dose of toxin is the amount present in 0.5 mL of that mixture which causes the death of one half of the total number of mice injected with it.

3-4-3. *Determination of the potency of the serum obtained from rabbits*

Preliminary test. Dissolve a quantity of the test toxin in a suitable liquid so that 2.0 mL contains 10 times the test dose (solution of the test toxin). Prepare a series of mixtures of the solution of the test toxin and of the serum to be examined such that each contains 2.0 mL of the solution of the test toxin, one of a series of graded volumes of the serum to be examined and sufficient of a suitable liquid to bring the final volume to 5.0 mL. Allow the mixtures to stand at room temperature for 60 min. Using not fewer than 2 mice for each mixture, inject a dose of 0.5 mL by the intravenous or the intraperitoneal

route into each mouse. Observe the mice for 72 h. If none of the mice die, 0.5 mL of the mixture contains more than 0.2 IU. If all the mice die, 0.5 mL of the mixture contains less than 0.2 IU.

Final test. Prepare a series of mixtures of the solution of the test toxin and of the serum to be examined such that 5.0 mL of each mixture contains 2.0 mL of the solution of the test toxin and one of a series of graded volumes of the serum to be examined, separated from each other by steps of not more than 20 per cent and covering the expected end-point as determined by the preliminary test. Prepare further mixtures of the solution of the test toxin and of the solution of the reference preparation such that 5.0 mL of each mixture contains 2.0 mL of the solution of the test toxin and one of a series of graded volumes of the solution of the reference preparation to confirm the test dose of the toxin. Allow the mixtures to stand at room temperature for 60 min. Using not fewer than 2 mice for each mixture proceed as described in the preliminary test. The test mixture which contains 0.2 IU in 0.5 mL is that mixture which kills the same or almost the same number of mice as the reference mixture containing 0.2 IU in 0.5 mL. Repeat the determination at least once and calculate the average of all valid estimates. The test is valid only if the reference preparation gives a result within 20 per cent of the expected value.

The confidence limits (P = 0.95) have been estimated to be:

- 85 per cent and 114 per cent when 2 animals per dose are used;
- 91.5 per cent and 109 per cent when 4 animals per dose are used;
- 93 per cent and 108 per cent when 6 animals per dose are used.

4. LABELLING

The label states:

- whether the preparation is a toxoid or a vaccine prepared from a whole inactivated culture, or a mixture of the two;
- for each target species, the immunising effect produced (for example, antibody production, protection against signs of disease or infection).

04/2013:2326

COCCIDIOSIS VACCINE (LIVE) FOR CHICKENS

Vaccinum coccidiosidis vivum ad pullum

1. DEFINITION

Coccidiosis vaccine (live) for chickens is a preparation of sporulated oocysts of a suitable line or lines of species of coccidial parasites (*Eimeria* spp.). This monograph applies to vaccines intended for administration to chickens for active immunisation.

2. PRODUCTION

2-1. *PREPARATION OF THE VACCINE*

Oocysts are produced in chickens from a flock free from specified pathogens (SPF) (*5.2.2*) or in embryonated hens' eggs from an SPF flock (*5.2.2*). The eggs must be subject to disinfection and/or incubation conditions validated to ensure the inactivation of any *Eimeria* that may be on the shells. The hatched chickens must then be reared in disinfected premises, in isolation conditions that ensure no infection with *Eimeria*. The chickens must not have been treated with coccidiostats. Oocysts are collected from faeces or contents of the intestinal tract of infected chickens during the patent period. Oocysts of different *Eimeria* lines are produced separately. Oocysts are isolated, purified, disinfected, sporulated and counted. The vaccine is produced by blending defined numbers of sporulated oocysts of each line in a suitable medium.

2-2. *SEED LOTS*

2-2-1. **Identification**. The identity of each *Eimeria* master seed is established from the characteristics of the coccidia produced from it, based on an appropriate selection of the following characteristics: size and shape of the oocyst; localisation of the developmental stages in the chicken intestine; pathognomonic lesions (*E. tenella*, *E. acervulina*, *E. necatrix*, *E. maxima* and *E. brunetti*) and lack of macroscopic lesions (*E. praecox* and *E. mitis*); size of schizonts in the intestinal mucosa; size of gametocytes in the mucosa; differences in the electrophoretic mobilities of certain isoenzymes, e.g. lactate dehydrogenase and glucose phosphate isomerase; and by the use of molecular biology techniques. Artificially attenuated lines may be distinguished from the parent strains by studying parameters appropriate to the method of attenuation.

2-2-2. **Extraneous agents**. Carry out tests 1-6 of chapter *2.6.24. Avian viral vaccines: tests for extraneous agents in seed lots*. General provisions *a-d*, *f* and *h* and section 7 of chapter *2.6.24* are also applicable. In these tests on the master seed lot, use organisms that are not more than 5 passages from the master seed lot at the start of the tests. Each master seed lot complies with the requirements of each test.

2-3. *CHOICE OF VACCINE COMPOSITION*

Only coccidial lines shown to be satisfactory with respect to residual pathogenicity and increase in virulence may be used in the preparation of the vaccine, and the tests described below (sections 2-3-2 and 2-3-3) may be used to demonstrate this. The vaccine shall be shown to be satisfactory with respect to safety (*5.2.6*) and efficacy (*5.2.7*) for the chickens for which it is intended. The following tests under Specific test for the safety of the vaccine composition (section 2-3-1) and Immunogenicity (section 2-3-4) may be used during the demonstration of safety and efficacy.

2-3-1. **Specific test for the safety of the vaccine composition**. Carry out the test with a preparation containing oocysts of each species at the least attenuated passage level that will be present in a batch of vaccine. Use not fewer than 10 chickens from an SPF flock (*5.2.2*). The chickens must be hatched and reared as described in section 2-1 and must not have been treated with coccidiostats. Use chickens of the category that is expected to be the most sensitive, i.e. 14-day-old chickens. During the test, chickens are housed in suitable conditions with the use of floor pens or cages with solid floors to favour reinfection with oocysts. Administer by gavage or another suitable route to each chicken a quantity of vaccinal oocysts consisting of the equivalent of not less than 10 times the maximum quantity of oocysts of each coccidial species likely to be contained in 1 dose of the vaccine. Observe the chickens at least daily for at least 14 days.

The test is not valid if more than 10 per cent of the vaccinated chickens die from causes not attributable to the vaccinal oocysts.

The vaccine complies with the test if no vaccinated chicken shows abnormal signs of disease or dies from causes attributable to the vaccine.

2-3-2. **Test for residual pathogenicity**. Carry out a separate test with each coccidial species and line to be included in the vaccine. Use in each case a preparation containing oocysts at the least attenuated passage level that will be present between the master seed lot and a batch of the vaccine. For each test use not fewer than 20 chickens from an SPF flock (*5.2.2*). The chickens must be hatched and reared as described in section 2-1 and must not have been treated with coccidiostats. Use chickens of the category that is expected to be the most sensitive, i.e. 14-day-old chickens. During the test, the chickens are placed in cages (or any other suitable accomodation that prevents reinfection and allows collection of faeces). Administer by gavage or another suitable route to each chicken the equivalent of not less than 10 times the maximum quantity of the vaccinal oocysts

Vaccines

likely to be contained in 1 dose of the vaccine. Observe the chickens at least daily for 14 days. The test is not valid if more than 10 per cent of the chickens die from causes not attributable to the vaccinal oocysts. Collect faeces and determine oocyst production daily from day 3 until day 14. On one day between days 4 and 8, depending on the length of the pre-patent period, when lesions are expected to be maximal, and on day 14, euthanise not fewer than 9 chickens and examine the intestinal tract for specific lesions indicative of infection with the coccidial species or, for species known not to induce macroscopic lesions (*E. mitis* and *E. praecox*), microscopic evidence of infection such as demonstration of oocysts or developing oocysts in the intestinal contents or scrapings of the intenstinal wall. For species that have the potential to produce relevant macroscopic pathological changes if not attenuated, a scoring system with a scale from 0 to 4 is used to record the species-specific lesions visible in the intestine as follows.

Eimeria acervulina

0 No gross lesions.

1 Scattered, white, plaque-like lesions containing developing oocysts are confined to the duodenum. These lesions are elongated with the longer axis transversely oriented on the intestinal walls like the rungs of a ladder. They may be seen on either the serosal or mucosal intestinal surfaces. There may be up to a maximum of 5 lesions per square centimetre.

2 Lesions are much closer together, but not coalescent; lesions may extend as far posterior as 20 cm below the duodenum in 3-week-old birds. The intestinal walls show no thickening. Digestive tract contents are normal.

3 Lesions are numerous enough to cause coalescence with reduction in lesion size and give the intestine a coated appearance. The intestinal wall is thickened and the contents are watery. Lesions may extend as far posterior as the yolk sac diverticulum.

4 The mucosal wall is greyish with completely coalescent colonies. Congestion may be confined to small petechiae or, in extremely heavy infections, the entire mucosa may be bright red in colour. Individual lesions may be indistinguishable in the upper intestine. Typical ladder-like lesions appear in the middle part of the intestine. The intestinal wall is very much thickened and the intestine is filled with a creamy exudate, which may bear large numbers of oocysts. Birds dying of coccidiosis are scored as 4.

Eimeria brunetti

0 No gross lesions.

1 No gross lesions. In the absence of distinct lesions, the presence of parasites may go undetected unless scrapings from suspicious areas are examined microscopically.

2 The intestinal wall may appear grey in colour. The lower portion may be thickened and flecks of pink material sloughed from the intestine are present.

3 The intestinal wall is thickened and a blood-tinged catarrhal exudate is present. Transverse red streaks may be present in the lower rectum and lesions occur in the caecal tonsils. Soft mucous plugs may be present in this latter area.

4 Extensive coagulation necrosis of the mucosal surface of the lower intestine may be present. In some birds a dry necrotic membrane may line the intestine and caseous cores may plug the entrance to the caeca. Lesions may extend into the middle or upper intestine. Birds dying of coccidiosis are scored as 4.

Eimeria maxima

0 No gross lesions.

1 Small red petechiae may appear on the serosal side of the mid-intestine. There is no ballooning or thickening of the intestine, though small amounts of orange mucous may be present.

2 The serosal surface may be speckled with numerous red petechiae. The intestine may be filled with orange mucous, but there is little or no ballooning of the intestine. There is thickening of the wall.

3 The intestinal wall is ballooned and thickened. The mucosal surface is roughened. Intestinal contents are composed of pinpoint blood clots and mucous.

4 The intestinal wall may be ballooned for most of its length. It contains numerous blood clots and digested red blood cells giving a characteristic colour and putrid odour. The wall is greatly thickened. Birds dying of coccidiosis are scored as 4.

Eimeria necatrix

0 No gross lesions.

1 Small scattered petechiae and white spots are easily seen on the serosal surface. There is little, if any, damage apparent on the mucosal surface.

2 Numerous petechiae are seen on the serosal surface. Slight ballooning confined to the midgut area may be present.

3 There is extensive haemorrhage into the lumen of the intestine. The serosal surface is covered with red petechiae and/or white plaques, and is rough and thickened with many pinpoint haemorrhages. Normal intestinal contents are lacking. Ballooning extends over the lower half of the small intestine.

4 Extensive haemorrhage gives the intestine a dark colour, and the intestinal contents consist of red or brown mucous. Ballooning may extend throughout much of the length of the intestine. Birds dying of coccidiosis are scored as 4.

Eimeria tenella

0 No gross lesions.

1 Very few scattered petechiae are seen on the caecal wall, and there is no thickening of the caecal walls. Normal caecal contents are present.

2 Lesions are more numerous with noticeable blood in the caecal contents, and the caecal wall is somewhat thickened. Normal caecal contents are present.

3 Large amounts of blood or caecal cores are present, and the caecal walls are greatly thickened. There is little if any normal faecal content in the caeca.

4 The caecal wall is greatly distended with blood or large caseous cores. Faecal debris is lacking or included in the cores. Birds dying of coccidiosis are scored as 4.

The species and line comply with the test for attenuation if no more than mild coccidial lesions or limited signs of infection are observed; where the scoring system described above is appropriate, the average lesion score on the day of sampling between days 4 and 8 and on day 14 is not greater than 1.5 points and no individual score is greater than 3 points. The quantity and time of oocyst production is determined.

2-3-3. **Increase in virulence**. Carry out a separate test according to general chapter *5.2.6* with each coccidial species and line to be included in the vaccine. Use a preparation containing oocysts at the master seed lot level. If the quantity of the master seed sufficient for performing the test is not available, the lowest passage seed used for the production

that is available in sufficient quantity may be used. For each test use 14-day-old chickens from an SPF flock (*5.2.2*). If the properties of the vaccinal oocysts allow sequential passage through 5 groups via natural spreading, this method may be used, otherwise, passage as described below is carried out. The chickens must be hatched and reared as described in section 2-1 and must not have been treated with coccidiostats. During the test, the chickens are placed in cages (or any other suitable accomodation that prevents reinfection and allows collection of faeces). Administer by gavage or another suitable route to each chicken of the 1st group a quantity of oocysts that will allow recovery of the oocysts for the passages described below. Collect faeces daily from day 2 to day 14 after infection and prepare a pooled suspension of sporulated oocysts from the 5 chickens. Administer a suitable quantity by gavage or another suitable route to each chicken of the next group. Carry out this passage operation not fewer than 4 times, verifying the presence of oocysts at each passage. If the vaccinal oocysts are not found at a passage level, repeat the passage by administration to a group of 10 chickens. Carry out the test for residual pathogenicity (section 2-3-2), using the material used for the 1st passage and the oocysts that have been recovered in the final passage. Compare the results obtained for signs of lesions or infection in the intestinal tract and oocyst output from administration of passaged and unpassaged oocysts.

The line complies with the test if no indication of an increase in virulence of the maximally passaged oocysts compared with the unpassaged oocysts is observed.

The test is not valid if oocysts are not recovered at any passage level.

2-3-4. **Immunogenicity**. The efficacy of each coccidial species and line included in the vaccine is determined in a separate study with an appropriate challenge strain. For each component, a test is carried out with vaccine administered by each route and method of administration to be recommended, using in each case chickens not older than the minimum age to be recommended for vaccination. The quantity of each of the components in the batch of vaccine administered to each chicken is not greater than the minimum number of oocysts to be stated on the label and the oocysts are at the most attenuated passage level that will be present in a batch of vaccine. Use for the test not fewer than 40 chickens from an SPF flock (*5.2.2*). The chickens must be hatched and reared as described in section 2-1 and must not have been treated with coccidiostats. Vaccinate not fewer than 20 chickens and maintain not fewer than 20 chickens as controls. For the evaluation of weight gain with *Eimeria* strains showing a low pathogenicity, the number of chickens used may be higher. The test may require different challenge doses for different test parameters and so may be assessed as separate challenge groups. For example, a lower challenge dose may be needed to determine the effect on oocyst output than the dose needed to determine the effect on weight gain and lesion scoring. After vaccination, the chickens are housed in suitable conditions with the use of floor pens or cages with solid floors to favour reinfection with oocysts. On a suitable day between days 14 and 21 after vaccination, weigh each chicken, move them to cages (or any other suitable accomodation that prevents reinfection and allows collection of faeces) and challenge each chicken by gavage or another suitable route with a sufficient quantity of virulent coccidia to induce in the unvaccinated controls signs of disease characteristic of the *Eimeria* challenge species. Observe the chickens at least daily until the end of the test. Record deaths and the number of surviving chickens that show clinical signs of disease. Collect faeces and determine oocyst production from day 3 after challenge until the end of the test. On an appropriate day between days 4 and 8 after challenge, depending on the length of the pre-patent period of the challenge species, weigh each chicken. Euthanise 10 chickens from each group and examine them for lesions in the intestinal tract. Where appropriate, record the specific lesions indicative of the coccidial challenge species (using the scoring system described in section 2-3-2). For species known not to induce macroscopic lesions (*E. mitis* and *E. praecox*), examine the chickens for microscopic evidence of infection such as demonstration of oocysts or developing oocysts in the intestinal contents or scrapings of the intestinal wall. On day 14 after challenge, weigh each of the remaining chickens.

The test is not valid if:

- during the period between vaccination and challenge, more than 10 per cent of the vaccinated or control chickens show abnormal clinical signs or die from causes not attributable to the vaccine;
- for challenges with *E. tenella*, *E. acervulina*, *E. necatrix*, *E. maxima* or *E. brunetti*, fewer than 80 per cent of the control chickens euthanised between days 4 and 8 have marked characteristic lesions of the challenge infection in the intestine at post-mortem examination (e.g. lesion scores not less than 2);
- for challenges with *E. mitis* or *E. praecox*, fewer than 80 per cent of the control chickens euthanised between days 4 and 8 are infected.

The vaccine complies with the test if:

- for all the *Eimeria* challenge species, the production of the oocysts is significantly decreased in vaccinates compared with controls;
- for all the *Eimeria* challenge species, no vaccinated chicken dies due to the challenge infection;
- for challenge with *E. tenella*, *E. acervulina*, *E. necatrix*, *E. maxima* or *E. brunetti*, at least 80 per cent of the vaccinates show no more than mild signs of disease and these are less marked than those in the controls;
- for challenges with *E. tenella*, *E. acervulina*, *E. necatrix*, *E. maxima* or *E. brunetti*, at least 80 per cent of the vaccinates have no or minimal lesions in the intestine (e.g. mean lesion scores not greater than 1) and no bird has a lesion score of 4;
- for challenges with *E. tenella*, *E. acervulina*, *E. necatrix*, *E. maxima*, *E. brunetti*, *E. mitis*, or *E. praecox*, the growth rate in the vaccinates is significantly greater than in the controls.

2-4. *MANUFACTURER'S TESTS*

2-4-1. **In-process test for sporulation rate and oocyst count**. A sample of each oocyst bulk is examined microscopically after the sporulation step and before blending to determine the percentage of sporulated oocysts and the oocyst count. The values obtained are within the limits shown to allow preparation of a satisfactory vaccine.

2-4-2. **Batch potency test for each *Eimeria* species in the vaccine**. It is not necessary to carry out the potency test (section 3-7) for each batch of the vaccine if it has been carried out using a batch or batches of vaccine with minimum potency and sporulated oocyst content. Where the test is not carried out, an alternative validated method is used, the criteria for acceptance for each component being set with reference to a batch of vaccine that has given satisfactory results in the test described under Potency.

2-4-3. **Freedom from extraneous agents**. The disinfection method applied during the preparation of the final product from the harvested oocysts may be validated to show effective inactivation of certain potential extraneous agents. Where relevant validation data is available and where justified and authorised, some or all of the tests indicated under Extraneous agents (section 3-4) may be omitted as routine tests on each batch.

3. BATCH TESTS

3-1. **Identification**

3-1-1. Microscopical examination is used to confirm the presence of coccidial oocysts in the batch of vaccine.

Vaccines

3-1-2. The potency test (or batch potency test) is used to confirm the presence of oocysts of each of the *Eimeria* species stated on the label.

3-2. **Bacteria and fungi**. The vaccine, including where applicable the diluent supplied for reconstitution, complies with the test for sterility prescribed in the monograph *Vaccines for veterinary use (0062)* and comply with the test with a medium selective for *Campylobacter* spp.

3-3. **Mycoplasmas**. The vaccine complies with the test for mycoplasmas (*2.6.7*).

3-4. **Extraneous agents**. Carry out tests 1-6 of chapter *2.6.25. Avian live virus vaccines: tests for extraneous agents in batches of finished product*. General provisions *a-d*, *g* and *h* are also applicable. The vaccine complies with the requirements of each test.

3-5. **Sporulated oocyst count**. The sporulated oocysts content per dose is determined by counting the sporulated oocysts in a suitable counting chamber, under the microscope. The contents are not less than the minimum and not more than the maximum content of sporulated oocysts stated on the label.

3-6. **Potency**. The vaccine complies with the requirements of the test prescribed under Immunogenicity (section 2-3-4) using 1 dose of the vaccine administered by a recommended route.

4. LABELLING

The label states the minimum and maximum number of sporulated oocysts per dose.

04/2013:0449

DISTEMPER VACCINE (LIVE) FOR MUSTELIDS

Vaccinum morbi Carrei vivum ad mustelidas

1. DEFINITION

Distemper vaccine (live) for mustelids is a preparation of a suitable strain of distemper virus that is attenuated for ferrets, or for ferrets and minks. This monograph applies to vaccines intended for the active immunisation of ferrets, or ferrets and minks, against disease caused by distemper virus.

2. PRODUCTION

2-1. *PREPARATION OF THE VACCINE*

The vaccine virus is grown in embryonated hens' eggs or in cell cultures.

2-2. *SUBSTRATE FOR VIRUS PROPAGATION*

2-2-1. **Embryonated hens' eggs**. If the vaccine virus is grown in embryonated hens' eggs, they are obtained from flocks free from specified pathogens (SPF) (*5.2.2*).

2-2-2. **Cell cultures**. If the vaccine virus is grown in cell cultures, they comply with the requirements for cell cultures for production of veterinary vaccines (*5.2.4*).

2-3. *CHOICE OF VACCINE VIRUS*

The vaccine virus is shown to be satisfactory with respect to safety (*5.2.6*) and efficacy (*5.2.7*) for the ferrets, or for the ferrets and minks for which it is intended.
The following tests for safety (section 2-3-1) and immunogenicity (section 2-3-3) may be used during the demonstration of safety and efficacy. The tests are performed in each species for which the vaccine is intended.

2-3-1. **Safety**. Carry out the test for each route and method of administration to be recommended for vaccination. Use vaccine virus at the least attenuated passage level that will be present in a batch of the vaccine.

For each test, use not fewer than 5 ferrets and/or minks of the minimum age to be recommended for vaccination and that do not have antibodies against distemper virus. Administer to each ferret and/or mink a quantity of the vaccine virus equivalent to not less than 10 times the maximum virus titre likely to be contained in 1 dose of the vaccine. Observe the animals at least daily for 42 days.

The vaccine complies with the test if no animal shows abnormal local or systematic reactions, signs of disease or dies from causes attributable to the vaccine.

2-3-2. **Increase in virulence**. Carry out the test according to general chapter *5.2.6* using animals of the most susceptible target species. Use animals that do not have antibodies against distemper virus. If the properties of the vaccine virus allow sequential passage through 5 groups via natural spreading, this method may be used, otherwise passage as described below is carried out.

Administer to each animal of the 1st group by a route to be recommended a quantity of the vaccine virus that will allow recovery of virus for the passages described below. Administer the virus by the route to be recommended for vaccination most likely to lead to reversion to virulence. After 5-10 days, prepare a suspension from, for example, the nasal mucosa, tonsils, thymus, spleen and the lungs and their local lymph nodes of each animal and pool the samples. Administer 1 mL of the pooled samples by the intranasal route to each animal of the next group. Carry out this passage operation not fewer than 4 times; verify the presence of the virus at each passage. If the virus is not found at a passage level, repeat the passage by administration to a group of 10 animals.

If the 5th group of animals shows no evidence of an increase in virulence indicative of reversion during the observation period, further testing is not required. Otherwise, carry out an additional safety test and compare the clinical signs and any relevant parameters in a group of at least 8 animals receiving the material used for the 1st passage and another similar group receiving the virus at the final passage level.

The vaccine virus complies with the test if no indication of an increased virulence of the virus recovered for the final passage compared with the material used for the 1st passage is observed. If virus is not recovered after an initial passage in 2 animals and a subsequent repeat passage in 10 animals, the vaccine virus also complies with the test.

2-3-3. **Immunogenicity**. A test is carried out for each route and method of administration to be recommended for vaccination using animals of the target species (ferrets and/or minks) for which the vaccine is intended. Use animals not older than the minimum age to be recommended for vaccination. The quantity of the vaccine virus administered to each animal is not greater than the minimum virus titre to be stated on the label and the virus is at the most attenuated passage level that will be present in a batch of vaccine.

Use for the test not fewer than 7 ferrets and/or minks that do not have antibodies against distemper virus. Vaccinate not fewer than 5 animals, according to the schedule to be recommended. Maintain not fewer than 2 animals as controls. Challenge each animal after 20-22 days by the intramuscular route with a quantity of a suspension of virulent distemper virus sufficient to cause the death of a ferret and/or a mink. Observe the animals at least daily for 21 days after challenge. Animals displaying typical signs of serious infection with distemper virus are euthanised to avoid unecessary suffering.

The test is not valid if 1 or both of the control animals do not die of distemper. The vaccine virus complies with the test if the vaccinated animals remain in normal health.

3. BATCH TESTS

3-1. **Identification**. The vaccine mixed with a specific distemper antiserum no longer provokes cytopathic effects in susceptible cell cultures or lesions on the chorio-allantoic membranes of fertilised hen eggs 9-11 days old.

3-2. **Bacteria and fungi**. The vaccine, including where applicable the diluent supplied for reconstitution, complies with the test for sterility prescribed in the monograph *Vaccines for veterinary use (0062)*.

3-3. **Mycoplasmas** (*2.6.7*). The vaccine complies with the test for mycoplasmas.

3-4. **Extraneous agents**. Neutralise the vaccine virus with a suitable monospecific antiserum against distemper virus and inoculate into susceptible cell cultures. The vaccine complies with the test if no cytopathic effect develops and there is no sign of the presence of haemagglutinating or haemadsorbing agents.

3-5. **Virus titre**. Titrate the vaccine virus in suitable cell cultures or fertilised hens' eggs 9-11 days old. The vaccine complies with the test if one dose contains not less than the minimum virus titre stated on the label.

3-6. **Potency**. The vaccine complies with the requirements of the test prescribed under Immunogenicity (section 2-3-3) when administered by a recommended route and method. It is not necessary to carry out the potency test for each batch of the vaccine if it has been carried out on a representative batch using a vaccinating dose containing not more than the minimum virus titre stated on the label.

04/2013:1938

DUCK PLAGUE VACCINE (LIVE)

Vaccinum pestis anatis vivum

1. DEFINITION

Duck plague vaccine (live) is a preparation of a suitable strain of duck plague virus (anatid herpesvirus 1). This monograph applies to vaccines intended for the active immunisation of ducks.

2. PRODUCTION

2-1. *PREPARATION OF THE VACCINE*

The vaccine virus is grown in embryonated hens' eggs or in cell cultures. The vaccine may be freeze-dried.

2-2. *SUBSTRATE FOR VIRUS PROPAGATION*

2-2-1. **Embryonated hens' eggs**. If the vaccine virus is grown in embryonated hens' eggs, they are obtained from flocks free from specified pathogens (SPF) (*5.2.2*).

2-2-2. **Cell cultures**. If the vaccine virus is grown in cell cultures, they comply with the requirements for cell cultures for production of veterinary vaccines (*5.2.4*).

2-3. *SEED LOTS*

2-3-1. **Extraneous agents**. The master seed lot complies with the test for extraneous agents in seed lots (*2.6.24*). In these tests on the master seed lot, the organisms used are not more than 5 passages from the master seed lot at the start of the tests.

2-4. *CHOICE OF VACCINE VIRUS*

The vaccine virus shall be shown to be satisfactory with respect to safety (*5.2.6*) and efficacy (*5.2.7*) for the ducks for which the vaccine is intended.

The following tests for safety (section 2-4-1), increase in virulence (section 2-4-2) and immunogenicity (section 2-4-3) may be used during demonstration of safety and efficacy.

2-4-1. **Safety**. Carry out the test for each route and method of administration to be recommended for vaccination, using in each case ducks from a species considered to be the most susceptible among the species to be recommended for vaccination, not older than the minimum age to be recommended for vaccination and that do not have antibodies against duck plague virus. Use vaccine virus at the least attenuated passage level that will be present in a batch of the vaccine.

For each test performed in ducks younger than 3 weeks of age, use not fewer than 10 susceptible ducks. For each test performed in ducks older than 3 weeks of age, use not fewer than 8 susceptible ducks. Administer to each duck a quantity of vaccine virus equivalent to not less than 10 times the maximum virus titre likely to be contained in 1 dose of the vaccine. Observe the ducks at least daily for at least 14 days.

The test is not valid if more than 10 per cent of the ducks younger than 3 weeks of age show abnormal signs of disease or die from causes not attributable to the vaccine. For ducks older than 3 weeks of age, the test is not valid if non-specific mortality occurs.

The vaccine virus complies with the test if no duck shows abnormal signs of disease or dies from causes attributable to the vaccine virus.

2-4-2. **Increase in virulence**. Carry out the test according to general chapter *5.2.6* using domestic ducks that do not have antibodies against duck plague virus and of an age suitable for the multiplication of the virus. If the properties of the vaccine virus allow sequential passage through 5 groups via natural spreading, this method may be used, otherwise passage as described below is carried out. Administer to each duck of the 1st group by a route to be recommended a quantity of the vaccine virus that will allow recovery of virus for the passages described below. 2 to 4 days later, take samples of liver and spleen from each duck and pool all samples. Administer 0.1 mL of the pooled suspension by the oro-nasal or a parenteral route to each duck of the next group. Carry out this passage operation not fewer than 4 times; verify the presence of the virus at each passage. If the virus is not found at a passage level, repeat the passage by administration to a group of 10 ducks.

If the 5th group of ducks shows no evidence of an increase in virulence indicative of reversion during the observation period, further testing is not required. Otherwise, carry out an additional safety test and compare the clinical signs and any relevant parameters in a group of at least 10 ducks receiving the material used for the 1st passage and another similar group receiving the virus at the final passage level.

The vaccine virus complies with the test if no indication of an increase in virulence of the virus at the final passage level compared with the material used for the 1st passage is observed. If virus is not recovered after an initial passage in 5 ducks and a subsequent repeat passage in 10 ducks, the vaccine virus also complies with the test.

2-4-3. **Immunogenicity**. A test is carried out for each route and method of administration to be recommended for vaccination, using in each case domestic ducks not older than the minimum age to be recommended for vaccination. The quantity of the vaccine virus administered to each duck is not greater than the minimum virus titre to be stated on the label and the virus is at the most attenuated passage level that will be present in a batch of the vaccine. For each test, use not fewer than 30 ducks of the same origin and that do not have antibodies against duck plague virus. Vaccinate by a route to be recommended not fewer than 20 ducks. Maintain not fewer than 10 ducks as controls. After 5 days, challenge each duck by a suitable route with a sufficient quantity of virulent duck plague virus. Observe the ducks at least daily for 14 days after challenge. Record the deaths and the number of surviving ducks that show clinical signs of disease.

The test is not valid if during the observation period after challenge fewer than 80 per cent of the control ducks die or show typical signs of duck plague and/or if during the period between the vaccination and challenge more than 10 per cent

of control or vaccinated ducks show abnormal clinical signs of disease or die from causes not attributable to the vaccine.

The vaccine virus complies with the test if during the observation period after challenge not fewer than 80 per cent of the vaccinated ducks survive and show no notable clinical signs of duck plague.

3. BATCH TESTS

3-1. **Identification**. The vaccine, diluted if necessary and mixed with a monospecific duck plague virus antiserum, no longer infects embryonated hens' eggs from an SPF flock (*5.2.2*) or susceptible cell cultures (*5.2.4*) into which it is inoculated.

3-2. **Bacteria and fungi**. The vaccine, including where applicable the diluent supplied for reconstitution, complies with the test for sterility prescribed in the monograph *Vaccines for veterinary use (0062)*.

3-3. **Mycoplasmas**. The vaccine complies with the test for mycoplasmas (*2.6.7*).

3-4. **Extraneous agents**. The vaccine complies with the tests for extraneous agents in batches of finished product (*2.6.25*).

3-5. **Virus titre**. Titrate the vaccine virus by inoculation into embryonated hens' eggs from an SPF flock (*5.2.2*) or into suitable cell cultures (*5.2.4*). The vaccine complies with the test if 1 dose contains not less than the minimum virus titre stated on the label.

3-6. **Potency**. The vaccine complies with the test prescribed under immunogenicity (section 2-4-3), when administered by a recommended route and method. It is not necessary to carry out the potency test for each batch of the vaccine if it has been carried out on a representative batch using a vaccinating dose containing not more than the minimum virus titre stated on the label.

04/2013:1315

DUCK VIRAL HEPATITIS TYPE I VACCINE (LIVE)

Vaccinum hepatitidis viralis anatis stirpis I vivum

1. DEFINITION

Duck viral hepatitis type I vaccine (live) is a preparation of a suitable strain of duck hepatitis virus type I. This monograph applies to vaccines intended for the active immunisation of breeder ducks in order to protect passively their progeny and/or for the active immunisation of ducklings.

2. PRODUCTION

2-1. *PREPARATION OF THE VACCINE*

The vaccine virus is grown in embryonated hens' eggs or in cell cultures.

2-2. *SUBSTRATE FOR VIRUS PROPAGATION*

2-2-1. **Embryonated hens' eggs**. If the vaccine virus is grown in embryonated hens' eggs, they are obtained from flocks free from specified pathogens (SPF) (*5.2.2*).

2-2-2. **Cell cultures**. If the vaccine virus is grown in cell cultures, they comply with the requirements for cell cultures for production of veterinary vaccines (*5.2.4*).

2-3. *SEED LOTS*

2-3-1. **Extraneous agents**. The master seed lot complies with the tests for extraneous agents in seed lots (*2.6.24*). In these tests on the master seed lot, the organisms used are not more than 5 passages from the master seed lot at the start of the tests.

2-4. *CHOICE OF VACCINE VIRUS*

The vaccine virus shall be shown to be satisfactory with respect to safety (*5.2.6*) and efficacy (*5.2.7*) for the ducks for which it is intended.

The following tests for safety (section 2-4-1), increase in virulence (section 2-4-2) and immunogenicity (section 2-4-3) may be used during demonstration of safety and efficacy.

2-4-1. **Safety**. Carry out the test for each route and method of administration to be recommended for vaccination using in each case susceptible domestic ducks (*Anas platyrhynchos*) not older than the minimum age to be recommended for vaccination and that do not have antibodies against duck hepatitis virus type I. Use vaccine virus at the least attenuated passage level that will be present in a batch of the vaccine.

For each test performed in ducklings younger than 3 weeks of age, use not fewer than 10 ducklings. For each test performed in ducklings older than 3 weeks of age, use not fewer than 8 ducklings. Administer to each duckling a quantity of vaccine virus equivalent to not less than 10 times the maximum virus titre likely to be contained in 1 dose of vaccine. Observe the ducklings at least daily for at least 14 days.

The test is not valid if more than 10 per cent of the ducklings younger than 3 weeks of age show abnormal signs of disease or die from causes not attributable to the vaccine. For ducklings older than 3 weeks of age, the test is not valid if non-specific mortality occurs.

The vaccine virus complies with the test if no duckling shows abnormal signs of disease or dies from causes attributable to the vaccine virus.

2-4-2. **Increase in virulence**. Carry out the test according to general chapter *5.2.6* using 1-day-old domestic ducklings that do not have antibodies against duck hepatitis virus type I. If the properties of the vaccine virus allow sequential passage through 5 groups via natural spreading, this method may be used, otherwise passage as described below is carried out.

Administer to each duckling of the 1st group by the oro-nasal route a quantity of vaccine virus that will allow recovery of virus for the passages described below. 2 to 4 days later, take samples of liver from each duckling and pool the samples. Administer 1 mL of the pooled liver suspension by the oro-nasal route to each duckling of the next group. Carry out this operation 4 times. Verify the presence of the virus at each passage. If the virus is not found at a passage level, repeat the passage by administration to a group of 10 ducklings. Observe the ducklings given the last passage at least daily for 21 days.

If the 5th group of ducklings shows no evidence of an increase in virulence indicative of reversion during the observation period, further testing is not required. Otherwise, carry out an additional safety test and compare the clinical signs and any relevant parameters in a group of at least 10 ducklings receiving the material used for the 1st passage and another similar group receiving the virus at the final passage level.

The vaccine virus complies with the test if no indication of an increase in virulence of the virus at the final passage level compared with the material used for the 1st passage is observed. If the virus is not recovered after an initial passage in 5 ducklings and a subsequent repeat passage in 10 ducklings, the vaccine virus also complies with the test.

2-4-3. **Immunogenicity**. A test is carried out for each route and method of administration to be recommended for vaccination, using in each case domestic ducks not older than the minimum age to be recommended for vaccination. The quantity of the vaccine virus administered to each bird is not greater than the minimum virus titre to be stated on the label and the virus is at the most attenuated passage level that will be present in a batch of the vaccine.

2-4-3-1. *Vaccines for passive immunisation of ducklings*. Use for the test not fewer than 15 laying ducks or ducks intended for laying, as appropriate, of the same origin and that do not have antibodies against duck hepatitis virus type I. Vaccinate

by a route to be recommended not fewer than 10 ducks using the schedule to be recommended. Maintain not fewer than 5 ducks as controls. Starting from 4 weeks after onset of lay, collect embryonated eggs from vaccinated and control ducks and incubate them. Challenge not fewer than twenty 1-week-old ducklings representative of the vaccinated group and not fewer than 10 from the control group by the oro-nasal route with a sufficient quantity of virulent duck hepatitis virus type I. Observe the ducklings at least daily for 14 days after challenge. Record the deaths and the number of surviving ducklings that show clinical signs of disease.

The test is not valid if:

- during the observation period after challenge fewer than 70 per cent of the challenged ducklings from the control ducks die or show typical signs of the disease,
- and/or during the period between vaccination and collection of the eggs more than 10 per cent of the control or vaccinated ducks show abnormal clinical signs or die from causes not attributable to the vaccine.

The vaccine virus complies with the test if during the observation period after challenge the percentage relative protection calculated using the following expression is not less than 80 per cent:

$$\frac{V - C}{100 - C} \times 100$$

V = percentage of challenged ducklings from vaccinated ducks that survive to the end of the observation period without clinical signs of the disease;

C = percentage of challenged ducklings from unvaccinated control ducks that survive to the end of the observation period without clinical signs of the disease.

2-4-3-2. *Vaccines for active immunisation of ducklings*. Use for the test not fewer than 30 ducklings of the same origin and that do not have antibodies against duck hepatitis virus type I. Vaccinate by a route to be recommended not fewer than 20 ducklings. Maintain not fewer than 10 ducklings as controls. Challenge each duckling after at least 5 days by the oro-nasal route with a sufficient quantity of virulent duck hepatitis virus type I. Observe the ducklings at least daily for 14 days after challenge. Record the deaths and the number of surviving ducklings that show clinical signs of disease.

The test is not valid if:

- during the observation period after challenge fewer than 70 per cent of the control ducklings die or show typical signs of the disease;
- and/or during the period between vaccination and challenge more than 10 per cent of the control or vaccinated ducklings show abnormal clinical signs or die from causes not attributable to the vaccine.

The vaccine virus complies with the test if during the observation period after challenge the percentage relative protection calculated using the following expression is not less than 80 per cent:

$$\frac{V - C}{100 - C} \times 100$$

V = percentage of challenged vaccinated ducklings that survive to the end of the observation period without clinical signs of the disease;

C = percentage of challenged unvaccinated control ducklings that survive to the end of the observation period without clinical signs of the disease.

3. BATCH TESTS

3-1. **Identification**. The vaccine, diluted if necessary and mixed with a monospecific duck hepatitis virus type I antiserum, no longer infects embryonated hens' eggs from an SPF flock (*5.2.2*) or susceptible cell cultures (*5.2.4*) into which it is inoculated.

3-2. **Bacteria and fungi**. Vaccines intended for administration by injection comply with the test for sterility prescribed in the monograph *Vaccines for veterinary use (0062)*.

Frozen or freeze-dried vaccines produced in embryonated eggs and not intended for administration by injection either comply with the test for sterility prescribed in the monograph *Vaccines for veterinary use (0062)* or with the following test: carry out a quantitative test for bacterial and fungal contamination; carry out identification tests for micro-organisms detected in the vaccine; the vaccine does not contain pathogenic micro-organisms and contains not more than 1 non-pathogenic micro-organism per dose.

Any diluent supplied for reconstitution of the vaccine complies with the test for sterility prescribed in the monograph *Vaccines for veterinary use (0062)*.

3-3. **Mycoplasmas**. The vaccine complies with the test for mycoplasmas (*2.6.7*).

3-4. **Extraneous agents**. The vaccine complies with the tests for extraneous agents in batches of finished product (*2.6.25*).

3-5. **Virus titre**. Titrate the vaccine virus by inoculation into embryonated hens' eggs from an SPF flock (*5.2.2*) or into suitable cell cultures (*5.2.4*). The vaccine complies with the test if 1 dose contains not less than the minimum virus titre stated on the label.

3-6. **Potency**. Depending on the indications, the vaccine complies with 1 or both of the tests prescribed under Immunogenicity (section 2-4-3), when administered by a recommended route and method. It is not necessary to carry out the potency test for each batch of the vaccine if it has been carried out on a representative batch using a vaccinating dose containing not more than the minimum virus titre stated on the label.

4. LABELLING

If it has been found that the vaccine may show reversion to virulence, the label indicates the precautions necessary to avoid transmission of virulent virus to unvaccinated ducklings.

04/2013:1202

EGG DROP SYNDROME '76 VACCINE (INACTIVATED)

Vaccinum morbi partus diminutionis MCMLXXVI inactivatum ad pullum

1. DEFINITION

Egg drop syndrome '76 vaccine (inactivated) is a preparation of a suitable strain of egg drop syndrome '76 virus (haemagglutinating avian adenovirus), inactivated while maintaining adequate immunogenic properties. This monograph applies to vaccines intended for protection of laying birds against a drop in egg production and/or for prevention of loss of egg quality.

2. PRODUCTION

2-1. *PREPARATION OF THE VACCINE*

The vaccine strain is propagated in embryonated hens' or ducks' eggs or in cell cultures. The vaccine may be adjuvanted.

Vaccines

2-2. *SUBSTRATE FOR VIRUS PROPAGATION*

2-2-1. **Embryonated hens' or ducks' eggs**. If the vaccine virus is grown in embryonated hens' or ducks' eggs, they are obtained from healthy flocks.

2-2-2. **Cell cultures**. If the vaccine virus is grown in cell cultures, they comply with the requirements for cell cultures for production of veterinary vaccines (*5.2.4*).

2-3. *SEED LOTS*

2-3-1. **Extraneous agents**. The master seed lot complies with the test for extraneous agents in seed lots (*2.6.24*). In these tests on the master seed lot, the organisms used are not more than 5 passages from the master seed lot at the start of the test.

2-4. *CHOICE OF VACCINE COMPOSITION*

The vaccine is shown to be satisfactory with respect to safety (*5.2.6*) and efficacy (*5.2.7*) for the birds for which it is intended.

The following tests for safety (section 2-4-1) and immunogenicity (section 2-4-2) may be used during the demonstration of safety and efficacy.

2-4-1. **Safety**. The test is carried out for each route of administration to be recommended for vaccination. Use a batch of vaccine containing not less than the maximum potency that may be expected in a batch of vaccine.

For each test, use not fewer than 8 hens not older than the minimum age to be recommended for vaccination and from a flock free from specified pathogens (SPF) (*5.2.2*). Administer by a route and method to be recommended to each hen 1 dose of the vaccine. Observe the hens at least daily for at least 14 days after the administration of the vaccine.

The test is not valid if non-specific mortality occurs. The vaccine complies with the test if no hen shows abnormal signs of disease or dies from causes attributable to the vaccine.

2-4-2. **Immunogenicity**. A test is carried out for each route and method of administration to be recommended, using in each case hens from an SPF flock (*5.2.2*) and of the age at which vaccination is recommended. The vaccine administered to each hen is of minimum potency.

Vaccinate each of 2 groups of 30 hens. Maintain 2 control groups one of 10 hens and the other of 30 hens, of the same age and from the same source as the vaccinates. Maintain individual egg production records from point of lay until 4 weeks after challenge. At 30 weeks of age, challenge each hen from 1 group of 30 vaccinates and the group of 10 control hens with a quantity of egg drop syndrome ′76 virus sufficient to cause a well marked drop in egg production and/or quality. The test is invalid unless there is a well marked drop in egg production and/or quality in the control hens. The vaccine complies with the test if the vaccinated hens show no marked drop in egg production and/or quality.

When the second group of vaccinated hens and the group of 30 control hens are nearing the end of lay, challenge these hens, as before. The test is invalid unless there is a well marked drop in egg production and/or quality in the control hens. The vaccine complies with the test if the vaccinated hens show no marked drop in egg production and/or quality.

Carry out serological tests on serum samples obtained at the time of vaccination, 4 weeks later and just prior to challenge. The test is not valid if antibodies against egg drop syndrome ′76 virus are detected in any sample from control hens.

2-5. *MANUFACTURER'S TESTS*

2-5-1. **Residual live virus**. The test for residual live virus is carried out in embryonated ducks' eggs from a flock free from egg drop syndrome ′76 virus infection, or in embryonated hens' eggs from an SPF flock (*5.2.2*), or in suitable cell cultures, whichever is the most sensitive for the vaccine strain. The quantity of inactivated virus harvest used in the test is equivalent to not less than 10 doses of the vaccine. The inactivated virus harvest complies with the test if no live virus is detected.

2-5-2. **Batch potency test**. It is not necessary to carry out the potency test (section 3-5) for each batch of vaccine if it has been carried out using a batch of vaccine with a minimum potency. Where the test is not carried out, an alternative validated method is used, the criteria for acceptance being set with reference to a batch of vaccine that has given satisfactory results in the test described under Potency. The following test may be used.

Vaccinate not fewer than ten 14- to 28-day-old chickens from an SPF flock (*5.2.2*) with 1 dose of vaccine by one of the recommended routes. 4 weeks later, collect serum samples from each bird and from 5 unvaccinated control birds of the same age and from the same source. Measure the antibody response in a haemagglutination (HA) inhibition test on each serum using 4 HA units of antigen and chicken erythrocytes. The test is not valid if there are specific antibodies in the sera of the unvaccinated birds. The vaccine complies with the test if the mean titre of the vaccinated group is not less than that found previously for a batch of vaccine that has given satisfactory results in the test described under Potency.

3. BATCH TESTS

3-1. **Identification**. When injected into chickens that do not have antibodies against egg drop syndrome ′76 virus, the vaccine stimulates the production of such antibodies.

3-2. **Bacteria and fungi**. The vaccine, including where applicable the diluent supplied for reconstitution, complies with the test for sterility prescribed in the monograph *Vaccines for veterinary use (0062)*.

3-3. **Residual live virus**. A test for residual live virus is carried out to confirm inactivation of egg drop syndrome ′76 virus.

A. For a vaccine prepared in eggs, carry out the test in embryonated ducks' eggs from a flock free from egg drop syndrome ′76 virus infection or, if it is known to provide a more sensitive test system, in hens' eggs from an SPF flock (*5.2.2*). Inject 2/5 of a dose into the allantoic cavity of each of ten 10- to 14-day-old embryonated eggs that are free from parental antibodies to egg drop syndrome ′76 virus. Incubate the eggs and observe for 8 days. Pool separately the allantoic fluid from eggs containing live embryos, and that from eggs containing dead embryos, excluding those that die from non-specific causes within 24 h of the injection. Inject into the allantoic cavity of each of ten 10- to 14-day-old embryonated eggs that do not have parental antibodies to egg drop syndrome ′76 virus, 0.2 mL of the pooled allantoic fluid from the live embryos and into each of 10 similar eggs, 0.2 mL of the pooled allantoic fluid from the dead embryos and incubate for 8 days. Examine the allantoic fluid from each egg for the presence of haemagglutinating activity using chicken erythrocytes. If more than 20 per cent of the embryos die at either stage, repeat that stage. The vaccine complies with the test if there is no evidence of haemagglutinating activity and if, in any repeat test, not more than 20 per cent of the embryos die from non-specific causes.

   Antibiotics may be used in the test to control extraneous bacterial infection.

B. For a vaccine adapted to growth in cell cultures, inoculate 10 doses into suitable cell cultures. If the vaccine contains an oily adjuvant, eliminate it by suitable means. Incubate the cultures at 38 ± 1 °C for 7 days. Make a passage on another set of cell cultures and incubate at 38 ± 1 °C for 7 days. Examine the cultures regularly and at the end of the incubation period examine the supernatant for the presence of haemagglutinating activity. The vaccine complies with the test if the cell cultures show no sign of infection and if there is no haemagglutinating activity in the supernatant.

3-4. **Specified extraneous agents**. Use 10 chickens, 14-28 days old, from an SPF flock (*5.2.2*). Vaccinate each chicken by a recommended route with a double dose of the vaccine. After 3 weeks, administer 1 dose by the same route. Collect

serum samples from each chicken 2 weeks later and carry out tests for antibodies against the following agents by the methods prescribed in general chapter *5.2.2. Chicken flocks free from specified pathogens for the production and quality control of vaccines*: avian encephalomyelitis virus, avian leucosis viruses, infectious bronchitis virus, avian infectious bursal disease virus, avian infectious laryngotracheitis virus, influenza A virus, Marek's disease virus, Newcastle disease virus and, for vaccine produced in duck eggs, *Chlamydia* (by a complement-fixation test or agar gel precipitation test), duck hepatitis virus type I (by a fluorescent-antibody test or serum-neutralisation test) and Derzsy's disease virus (by a serum-neutralisation test).

The vaccine complies with the test if it does not stimulate the formation of antibodies against these agents.

3-5. **Potency**. The vaccine complies with the requirements of the test mentioned under Immunogenicity (section 2-4-2) when administered by a recommended route and method.

4. LABELLING

The label states whether the strain in the vaccine is duck- or hen-embryo-adapted or cell-culture-adapted.

04/2013:1613

EQUINE HERPESVIRUS VACCINE (INACTIVATED)

Vaccinum herpesviris equini inactivatum

1. DEFINITION

Equine herpesvirus vaccine (inactivated) is a preparation of one or more suitable strains of equid herpesvirus 1 and/or equid herpesvirus 4, inactivated while maintaining adequate immunogenic properties or a suspension of an inactivated fraction of the virus. This monograph applies to vaccines intended for the active immunisation of horses against disease caused by equid herpesvirus 1 and/or equid herpesvirus 4.

2. PRODUCTION

2-1. *PREPARATION OF THE VACCINE*

Each strain of vaccine virus is grown separately in cell cultures. The viral suspensions may be purified and concentrated and are inactivated; they may be treated to fragment the virus and the viral fragments may be purified and concentrated. The vaccine may be adjuvanted.

2-2. *SUBSTRATE FOR VIRUS PROPAGATION*

2-2-1. **Cell cultures**. The cell cultures comply with the requirements for cell cultures for production of veterinary vaccines (*5.2.4*).

2-3. *CHOICE OF VACCINE COMPOSITION*

The vaccine is shown to be satisfactory with respect to safety (*5.2.6*) and efficacy (*5.2.7*) for the horses for which it is intended. Where a particular breed of horse is known to be especially sensitive to the vaccine, horses from that breed are included in the test for safety.

The following tests for safety (section 2-3-1) and immunogenicity (section 2-3-2) may be used during the demonstration of safety and efficacy.

2-3-1. **Safety**. Carry out the test for each route and method of administration to be recommended for vaccination and in horses of each category for which the vaccine is intended. Use a batch of vaccine containing not less than the maximum potency that may be expected in a batch of vaccine.

Use for the test not fewer than 8 horses that have not been previously vaccinated with an equine herpesvirus vaccine, that have at most a low antibody titre not indicative of recent infection and that do not excrete equid herpesvirus. Administer to each horse 1 dose of the vaccine, then another dose after 14 days. Observe the horses at least daily until at least 14 days after the last administration.

The vaccine complies with the test if no horse shows abnormal local or systemic reactions or dies from causes attributable to the vaccine during the 28 days of the test.

2-3-2. **Immunogenicity**. The type of immunogenicity test depends on the claims for the product. For vaccines intended to protect against the disease of the respiratory tract, carry out test 2-3-2-1, using equid herpesvirus 1 and/or equid herpesvirus 4 depending on the claims for protection. For vaccines intended to protect against abortion carry out test 2-3-2-2.

A test is carried out for each route and method of administration to be recommended, using in each case horses that have not been vaccinated with an equine herpesvirus vaccine, that have at most a low antibody titre not indicative of recent infection, and that do not excrete equid herpesvirus. To demonstrate that no recent infection occurs, immediately before vaccination: draw a blood sample from each horse and test individually for antibodies against equid herpesviruses 1 and 4; collect 10 mL of heparinised blood and test the washed leucocytes for equid herpesviruses 1 and 4; collect a nasopharyngeal swab and test for equid herpesviruses 1 and 4. There is no indication of an active infection. Immediately before challenge collect a nasopharyngeal swab and test for equid herpesviruses 1 and 4. If there is an indication of virus excretion remove the horse from the test. Keep the horses in strict isolation. The vaccine administered to each horse is of minimum potency.

2-3-2-1. *Vaccines intended for protection against disease of the respiratory tract*. Use for the test not fewer than 10 horses, not less than 6 months old. Vaccinate not fewer than 6 horses according to the schedule to be recommended. Maintain not fewer than 4 horses as controls. At least 2 weeks after the last vaccination, challenge each horse by nasal instillation with a quantity of equid herpesvirus 1 or 4, sufficient to produce in a susceptible horse characteristic signs of the disease such as pyrexia and virus excretion (and possibly nasal discharge and coughing). Observe the horses at least daily for 14 days. Collect nasopharyngeal swabs daily from each individual horse to isolate the virus.

The vaccine complies with the test if the vaccinated horses show no more than slight signs; the signs in vaccinates are less severe than in controls. The average number of days on which virus is excreted and the respective virus titres are significantly lower in vaccinated horses than in controls.

2-3-2-2. *Vaccines intended for protection against abortion*. Use not fewer than 10 pregnant horses. In addition to the testing described above, 6, 4, 3, 2 and 1 month before the first vaccination draw a blood sample from each horse and test individually for antibodies against equid herpesvirues 1 and 4. There is no evidence of recent infection or virus excretion. Vaccinate not fewer than 6 horses according to the schedule to be recommended. Maintain not fewer than 4 horses as controls. Between day 260 and day 290 of pregnancy but not earlier than 3 weeks after the last vaccination, challenge each horse, by nasal instillation, with a quantity of equid herpesvirus 1 sufficient to produce abortion in susceptible horses. Observe the horses at least daily up to foaling or abortion. Collect samples of fetal lung and liver tissues from aborted fetuses and carry out tests for virus in cell cultures.

The test is not valid if more than one control horse gives birth to a healthy foal and if the challenge virus is not isolated from the aborted fetuses. The vaccine complies with the test if not more than one vaccinated horse aborts.

2-4. *MANUFACTURER'S TESTS*

2-4-1. **Residual live virus**. The test for residual live virus is carried out using 2 passages in the same type of cell culture as that used in the production or in cell cultures shown to be at least as sensitive. The quantity of inactivated virus harvest

used in the test is equivalent to not less than 25 doses of the vaccine. The inactivated virus harvest complies with the test if no live virus is detected.

2-4-2. **Batch potency test**. It is not necessary to carry out the potency test (section 3-4) for each batch of vaccine if it has been carried out using a batch of vaccine with a minimum potency. Where the test is not carried out, an alternative validated method is used, the criteria for acceptance being set with reference to a batch of vaccine that has given satisfactory results in the test described under Potency. The following test may be used.

Vaccinate not fewer than 5 rabbits, guinea-pigs or mice with a single injection of a suitable dose. Where the recommended schedule requires a 2nd injection to be given, the recommended schedule may be used in laboratory animals provided it has been demonstrated that this will still provide a suitably sensitive test system. At a given interval within the range of 14-21 days after the last injection, collect blood from each animal and prepare serum samples. Use a suitable validated test such as an enzyme-linked immunosorbent assay to measure the response to each of the antigens stated on the label. The vaccine complies with the test if the antibody levels are not significantly less than those obtained with a batch that has given satisfactory results in the test described under Potency.

3. BATCH TESTS

3-1. **Idenfication**. In animals that do not have antibodies against equid herpesvirus 1 and equid herpesvirus 4 or a fraction of the viruses, the vaccine stimulates the production of specific antibodies against the virus type or types included in the product. The method used must distinguish between antibodies against equid herpesviruses 1 and 4.

3-2. **Bacteria and fungi**. The vaccine, including where applicable the diluent supplied for reconstitution, complies with the test for sterility prescribed in the monograph *Vaccines for veterinary use (0062)*.

3-3. **Residual live virus**. Carry out a test for residual live virus using not less than 25 doses of vaccine by inoculating cell cultures sensitive to equid herpesviruses 1 and 4; make a passage after 5-7 days and maintain the cultures for 14 days. The vaccine complies with the test if no live virus is detected. If the vaccine contains an adjuvant, separate the adjuvant from the liquid phase, by a method that does not inactivate or otherwise interfere with the detection of live virus, or carry out a test for inactivation on the mixture of bulk antigens before addition of the adjuvant.

3-4. **Potency**. The vaccine complies with the requirements of the test mentioned under Immunogenicity (section 2-3-2) when administered by a recommended route and method.

04/2013:0249
corrected 7.8

EQUINE INFLUENZA VACCINE (INACTIVATED)

Vaccinum influenzae equinae inactivatum

1. DEFINITION

Equine influenza vaccine (inactivated) is a preparation of one or more suitable strains of equine influenza virus, inactivated while maintaining adequate immunogenic properties. Suitable strains contain both haemagglutinin and neuraminidase. This monograph applies to vaccines intended for the active immunisation of horses against equine influenza.

2. PRODUCTION

2-1. *PREPARATION OF THE VACCINE*

Each strain of virus is grown separately in embryonated hens' eggs or in cell cultures. The viral suspensions may be purified and concentrated. The antigen content of the vaccine is based on the haemagglutinin content of the viral suspensions determined as described under Manufacturer's tests; the amount of haemagglutinin for each strain is not less than that in the vaccine shown to be satisfactory in the test for potency. The vaccine may be adjuvanted.

2-2. *SUBSTRATE FOR VIRUS PROPAGATION*

2-2-1. **Embryonated hens' eggs**. If the vaccine virus is grown in embryonated hens' eggs, they are obtained from a healthy flock.

2-2-2. **Cell cultures**. If the vaccine virus is grown in cell cultures, they comply with the requirements for cell cultures for production of veterinary vaccines (*5.2.4*).

2-3. *CHOICE OF VACCINE COMPOSITION*

The choice of strains used in the vaccine is based on epidemiological data. The World Organisation for Animal Health (OIE, formerly the *Office international des épizooties*) reviews the epidemiological data periodically and if necessary recommends new strains corresponding to prevailing epidemiological evidence. Such strains are used in accordance with the regulations in force in the signatory states of the Convention on the Elaboration of a European Pharmacopoeia. The vaccine is shown to be satisfactory with respect to safety (*5.2.6*) and efficacy (*5.2.7*) for the horses for which it is intended. Where a particular breed of horse is known to be especially sensitive to the vaccine, horses from that breed are included in the tests for safety.

The following tests for safety (section 2-3-1) and immunogenicity (section 2-3-2) may be used during the demonstration of safety and efficacy.

2-3-1. **Safety**. Carry out the test for each route and method of administration to be recommended for vaccination and in horses of each category for which the vaccine is intended. Use a batch of vaccine containing not less than the maximum potency that may be expected in a batch of vaccine.

Use for the test not fewer than 8 horses that preferably do not have antibodies against equine influenza virus or, where justified, use horses with a low level of such antibodies as long as they have not been vaccinated against equine influenza and administration of the vaccine does not cause an anamnestic response. Administer to each horse 1 dose of the vaccine, then another dose after at least 14 days. Observe the horses at least daily until at least 14 days after the last administration.

The vaccine complies with the test if no horse shows abnormal local or systemic reactions or dies from causes attributable to the vaccine during the 28 days of the test.

2-3-2. **Immunogenicity**. The test described under 2-3-2-1 is suitable to demonstrate the immunogenicity of the strains present in the vaccine.

A test with virulent challenge is carried out for at least one vaccine strain (see test under 2-3-2-1). For other strains in the vaccine, demonstration of immunogenicity may, where justified, be based on the serological response induced in horses by the vaccine (see tests under 2-3-2-2); justification for protection against these strains may be based on published data on the correlation of the antibody titre with protection against antigenically related strains.

Where serology is used, the test is carried out as described under 2-3-2-1 but instead of virulent challenge, a blood sample is drawn 2 weeks after the last vaccination and the antibody titre of each serum is determined by a suitable immunochemical method (*2.7.1*), such as the single radial haemolysis test or the haemagglutination-inhibition test shown below; a reference serum is used to validate the test. The acceptance criteria depend on the strain and are

based on available data; for A/equine-2 virus, vaccines have usually been found satisfactory if the antibody titre of each serum is not less than 85 mm^2 where the single radial haemolysis test is used, or not less than 1:64 (before mixture with the suspension of antigen and erythrocytes) where the haemagglutination-inhibition test is used.

Equine influenza subtype 1 strain A/eq/Newmarket/77 horse antiserum BRP, *equine influenza subtype 2 European-like strain A/eq/Newmarket/2/93 horse antiserum BRP*, *equine influenza subtype 2 American-like strain A/eq/Newmarket/1/93 horse antiserum BRP* and *equine influenza subtype 2 American-like strain A/eq/South Africa/4/03 horse antiserum BRP* are suitable for use as reference sera for the single radial haemolysis test.

The claims for the product reflect the type of immunogenicity demonstrated (protection against challenge or antibody production).

2-3-2-1. *Protection from signs of disease and reduction of virus excretion*. Carry out the immunogenicity test using a challenge strain against which the vaccine is stated to provide protection. Use where possible a recent isolate.

A test is carried out for each route and method of administration to be recommended, using in each case horses not less than 6 months old. The vaccine administered to each horse is of minimum potency.

Use for the test not fewer than 10 horses that do not have antibodies against equine influenza virus. Draw a blood sample from each horse and test individually for antibodies against equine influenza virus to determine seronegativity. Vaccinate not fewer than 6 horses according to the schedule to be recommended. Maintain not fewer than 4 horses as controls. Draw a second blood sample from each vaccinated horse 7 days after the first vaccination and test individually for antibodies against equine influenza virus, to detect an anamnestic sero-response. Horses showing sero-conversion at this stage are excluded from the test. At least 2 weeks after the last vaccination, challenge each horse by aerosol with a quantity of equine influenza virus sufficient to produce characteristic signs of disease such as fever, nasal discharge and coughing in a susceptible horse. Observe the horses at least daily for 14 days. Collect nasal swabs daily from each individual horse to isolate the virus.

The vaccine complies with the test if the vaccinated horses show no more than slight signs; the controls show characteristic signs. The average number of days on which virus is excreted and the respective virus titres are significantly lower in vaccinated horses than in control horses.

2-3-2-2. *Presence of antibodies after vaccination*

2-3-2-2-1. Single radial haemolysis. Heat each serum at 56 °C for 30 min. Perform tests on each serum using respectively the antigen or antigens prepared from the strain(s) used in the production of the vaccine. Mix 1 mL of sheep erythrocyte suspension in barbital buffer solution (1 volume of erythrocytes in 10 volumes of final suspension) with 1 mL of a suitable dilution of the influenza virus strain in barbital buffer solution and incubate the mixture at 4 °C for 30 min. To 2 mL of the virus/erythrocyte mixture, add 1 mL of a 3 g/L solution of *chromium(III) trichloride hexahydrate R*, mix and allow to stand for 10 min. Heat the sensitised erythrocytes to 47 °C in a water-bath. Mix 15 mL of a 10 g/L solution of *agarose for electrophoresis R* in barbital buffer solution, 0.7 mL of sensitised erythrocyte suspension and the appropriate amount of diluted guinea-pig complement in barbital buffer solution at 47 °C. Pour the mixture into Petri dishes and allow the agar to set. Punch holes in the agar layer and place in each hole 5 µL of the undiluted serum to be tested or the control serum. Incubate the Petri dishes at 37 °C for 18 h. Measure the diameter of the haemolysis zone and calculate its area, which expresses the antibody titre, in square millimetres.

Equine influenza subtype 1 strain A/eq/Newmarket/77 horse antiserum BRP, *equine influenza subtype 2 European-like strain A/eq/Newmarket/2/93 horse antiserum BRP*, *equine influenza subtype 2 American-like strain A/eq/Newmarket/1/93 horse antiserum BRP* and *equine influenza subtype 2 American-like strain A/eq/South Africa/4/03 horse antiserum BRP* are suitable for use as reference sera for the single radial haemolysis test.

2-3-2-2-2. Haemagglutination-inhibition test. Inactivate each serum by heating at 56 °C for 30 min. To 1 volume of each serum add 3 volumes of *phosphate buffered saline pH 7.4 R* and 4 volumes of a 250 g/L suspension of *light kaolin R* in the same buffer solution. Shake each mixture for 10 min. Centrifuge, collect the supernatant and mix with a concentrated suspension of chicken erythrocytes. Allow to stand at 37 °C for 60 min and centrifuge. The dilution of the serum obtained is 1:8. Perform tests on each serum using each antigen prepared from the strains used in the production of the vaccine. Using each diluted serum, prepare a series of 2-fold dilutions. To 0.025 mL of each of the latter dilutions add 0.025 mL of a suspension of antigen treated with *ether R* and containing 4 haemagglutinating units. Allow the mixture to stand for 30 min and add 0.05 mL of a suspension of chicken erythrocytes containing 2×10^7 erythrocytes/mL. Allow to stand for 1 h and note the last dilution of serum that still completely inhibits haemagglutination.

2-4. *MANUFACTURER'S TESTS*

2-4-1. **Residual live virus**. The test for residual live virus is carried out using method 2-4-1-1 or method 2-4-1-2, whichever is more sensitive. The quantity of inactivated virus harvest used is equivalent to not less than 10 doses of vaccine.

2-4-1-1. *Test in cell cultures*. Inoculate the vaccine into suitable cells; after incubation for 8 days, make a subculture. Incubate for a further 6-8 days. Harvest about 0.1 mL of the supernatant and examine for live virus by a haemagglutination test. If haemagglutination is found, carry out a further passage in cell culture and test for haemagglutination; the inactivated virus harvest complies with the test if no haemagglutination occurs.

2-4-1-2. *Test in embryonated eggs*. Inoculate 0.2 mL into the allantoic cavity of each of 10 embryonated eggs and incubate at 33-37 °C for 3-4 days. The test is invalid unless not fewer than 8 of the 10 embryos survive. Harvest 0.5 mL of the allantoic fluid from each surviving embryo and pool the fluids. Inoculate 0.2 mL of the pooled fluid into a further 10 embryonated eggs and incubate at 33-37 °C for 3-4 days. The test is invalid unless at least 8 of the 10 embryonated embryos survive. Harvest about 0.1 mL of the allantoic fluid from each surviving embryo and examine each individual harvest for live virus by a haemagglutination test. If haemagglutination is found for any of the fluids, carry out a further passage of that fluid in eggs and test for haemagglutination; the inactivated virus harvest complies with the test if no haemagglutination occurs.

2-4-2. **Batch potency test**. It is not necessary to carry out the potency test (section 3-4) for each batch of vaccine if it has been carried out using a batch of vaccine with a minimum potency. Where the test is not carried out, an alternative validated method is used, the criteria for acceptance being set with reference to a batch of vaccine that has given satisfactory results in the test(s) described under Potency. The following test may be used.

Use 5 guinea-pigs that do not have specific antibodies. Vaccinate each guinea-pig by the subcutaneous route with one dose of vaccine. 21 days later, collect blood samples and separate the serum. Carry out tests on the serum for specific antibodies by a suitable immunochemical method (*2.7.1*) such as single radial haemolysis or haemagglutination-inhibition, using reference sera to validate the test. The vaccine complies with the test if the antibody titres are not significantly lower than those obtained in guinea-pigs with a reference batch of vaccine shown to have satisfactory potency in horses.

2-4-3. **Bacterial endotoxins**. For vaccines produced in eggs, the content of bacterial endotoxins is determined on the virus harvest to monitor production.

2-4-4. **Haemagglutinin content**. The content of haemagglutinin in the inactivated virus suspension, after purification and concentration where applicable, is determined by a suitable immunochemical method (*2.7.1*), such as single radial immunodiffusion, using a suitable haemagglutinin reference preparation; the inactivated virus suspension complies with the test if the content is shown to be within the limits shown to allow preparation of a satisfactory vaccine.

3. BATCH TESTS

3-1. **Identification**. In animals that do not have specific antibodies against equine influenza virus, the vaccine stimulates the production of such antibodies.

3-2. **Bacteria and fungi**. The vaccine, including where applicable the diluent supplied for reconstitution, complies with the test for sterility prescribed in the monograph *Vaccines for veterinary use (0062)*.

3-3. **Residual live virus**. Inoculate 0.2 mL of the vaccine into the allantoic cavity of each of 10 embryonated eggs and incubate at 33-37 °C for 3-4 days. The test is invalid unless at least 8 of the 10 embryos survive. Harvest 0.5 mL of the allantoic fluid from each surviving embryo and pool the fluids. Inoculate 0.2 mL of the pooled fluid into a further 10 embryonated eggs and incubate at 33-37 °C for 3-4 days. The test is invalid unless not fewer than 8 of the 10 embryos survive. Harvest about 0.1 mL of the allantoic fluid from each surviving embryo and examine each individual harvest for live virus by a haemagglutination test. If haemagglutination is found for any of the fluids, carry out for that fluid a further passage in eggs and test for haemagglutination; the vaccine complies with the test if no haemagglutination occurs.

3-4. **Potency**. The vaccine complies with the requirements of the test(s) mentioned under Immunogenicity (section 2-3-2) when administered by a recommended route and method.

04/2013:1101

FELINE CALICIVIROSIS VACCINE (INACTIVATED)

Vaccinum calicivirosis felinae inactivatum

1. DEFINITION

Feline calicivirosis vaccine (inactivated) is a preparation of one or more suitable strains of feline calicivirus inactivated while maintaining adequate immunogenic properties or of fractions of one or more strains of feline calicivirus with adequate immunogenic properties. This monograph applies to vaccines intended for the active immunisation of cats against feline calicivirosis.

2. PRODUCTION

2-1. *PREPARATION OF THE VACCINE*

The vaccine virus is grown in cell cultures. The virus harvest is inactivated; the virus may be disrupted and the fractions purified and concentrated. The vaccine may be adjuvanted.

2-2. *SUBSTRATE FOR VIRUS PROPAGATION*

2-2-1. **Cell cultures**. The cell cultures comply with the requirements for cell cultures for production of veterinary vaccines (*5.2.4*).

2-3. *CHOICE OF VACCINE COMPOSITION*

The vaccine is shown to be satisfactory with respect to safety (*5.2.6*) and efficacy (*5.2.7*) for the cats for which it is intended.

The following tests for safety (section 2-3-1) and immunogenicity (section 2-3-2) may be used during the demonstration of safety and efficacy.

2-3-1. **Safety**. Carry out the test for each route and method of administration to be recommended for vaccination. Use a batch of vaccine containing not less than the maximum potency that may be expected in a batch of vaccine.

For each test, use not fewer than 8 cats of the minimum age to be recommended for vaccination and that do not have antibodies against feline calicivirus. Administer to each cat 1 dose of the vaccine. If the schedule to be recommended requires a 2nd dose, administer 1 dose after an interval of at least 14 days after the last administration. Observe the cats at least daily for at least 14 days after the last administration.

The vaccine complies with the test if no cat shows abnormal local or systemic reactions or dies from causes attributable to the vaccine.

2-3-2. **Immunogenicity**. A test is carried out for each strain of feline calicivirus in the vaccine and for each route and method of administration to be recommended for vaccination, using in each case cats 8-12 weeks old. The vaccine administered to each cat is of minimum potency.

Use for the test not fewer than 20 cats that do not have antibodies against feline calicivirus. Vaccinate not fewer than 10 cats, according to the schedule to be recommended. Maintain not fewer than 10 cats as controls. Challenge each cat after 4 weeks by the intranasal route with a sufficient quantity of a suspension of virulent feline calicivirus. Observe the cats at least daily for 14 days after challenge. Collect nasal washings daily on days 2 to 14 to test for virus excretion. Note daily the body temperature and signs of disease using the scoring system shown below.

The test is not valid if during the observation period after challenge, fewer than 80 per cent of the control cats show notable signs of feline calicivirosis (hyperthermia, buccal ulcers, respiratory signs). The vaccine complies with the test if during the observation period after challenge, the score for the vaccinated cats is significantly lower than that for the controls.

Observed signs	Score
Death	10
Depressed state	2
Temperature ≥ 39.5 °C	1
Temperature ≤ 37 °C	2
Ulcer (nasal or oral)	
– small and few in number	1
– large and numerous	3
Nasal discharge	
– slight	1
– copious	2
Ocular discharge	1
Weight loss	2
Virus excretion (total number of days):	
≤ 4 days	1
5-7 days	2
> 7 days	3

2-4. *MANUFACTURER'S TESTS*

2-4-1. **Residual live virus**. The test for residual live calicivirus is carried out using 2 passages in cell cultures of the same type as those used for preparation of the vaccine or in cell cultures shown to be at least as sensitive; the quantity of inactivated virus harvest used in the test is equivalent to not less than 25 doses of vaccine. The inactivated viral harvest complies with the test if no live virus is detected.

2-4-2. **Batch potency test**. It is not necessary to carry out the Potency test (section 3-4) for each batch of vaccine if it has been carried out using a batch of vaccine with a minimum potency. Where the test is not carried out, an alternative validated method is used, the criteria for acceptance being set with reference to a batch of vaccine that has given satisfactory results in the test described under Potency. The following test may be used.

Use for the test groups of 15 seronegative mice. Administer to each mouse half a dose of the vaccine and 7 days later, repeat the administration. After 21 days following the first injection, take blood samples and determine the level of antibodies against feline calicivirus by an immunofluorescence technique using pools of serum from groups of 3 mice. The vaccine complies with the test if the antibody levels are not significantly lower than those obtained with a batch of vaccine that has given satisfactory results in the test described under Potency.

3. BATCH TESTS

3-1. **Identification**. When injected into animals that do not have specific antibodies against feline calicivirus, the vaccine stimulates the formation of such antibodies.

3-2. **Bacteria and fungi**. The vaccine, including where applicable the diluent supplied for reconstitution, complies with the test for sterility prescribed in the monograph *Vaccines for veterinary use (0062)*.

3-3. **Residual live virus**. Carry out a test for residual live calicivirus using 10 doses of vaccine and 2 passages in cell cultures of the same type as those used for preparation of the vaccine or in cell cultures shown to be at least as sensitive. The vaccine complies with the test if no live virus is detected. If the vaccine contains an adjuvant that would interfere with the test, where possible separate the adjuvant from the liquid phase by a method that does not inactivate or otherwise interfere with detection of live virus.

3-4. **Potency**. The vaccine complies with the requirements of the test prescribed under Immunogenicity (section 2-3-2) when administered by a recommended route and method.

04/2013:1102

FELINE CALICIVIROSIS VACCINE (LIVE)

Vaccinum calicivirosis felinae vivum

1. DEFINITION

Feline calicivirosis vaccine (live) is a preparation of one or more suitable strains of feline calicivirus. This monograph applies to vaccines intended for the active immunisation of cats against feline calicivirosis.

2. PRODUCTION

2-1. *PREPARATION OF THE VACCINE*

The vaccine virus is grown in cell cultures.

2-2. *SUBSTRATE FOR VIRUS PROPAGATION*

2-2-1. **Cell cultures**. The cell cultures comply with the requirements for cell cultures for production of veterinary vaccines (*5.2.4*).

2-3. *CHOICE OF VACCINE VIRUS*

The vaccine virus is shown to be satisfactory with respect to safety (*5.2.6*) and efficacy (*5.2.7*) for the cats for which it is intended.

The following tests for safety (section 2-3-1), increase in virulence (section 2-3-2) and immunogenicity (section 2-3-3) may be used during the demonstration of safety and efficacy.

2-3-1. **Safety**. Carry out the test for each route and method of administration to be recommended for vaccination. Use vaccine virus at the least attenuated passage level that will be present in a batch of the vaccine.

For each test, use not fewer than 8 cats of the minimum age to be recommended for vaccination and that do not have antibodies against feline calicivirus. Administer to each cat a quantity of the vaccine virus equivalent to not less than 10 times the maximum virus titre likely to be contained in 1 dose of the vaccine. Observe the cats at least daily for at least 14 days.

The vaccine virus complies with the test if no cat shows abnormal local or systemic reactions, or dies from causes attributable to the vaccine virus.

2-3-2. **Increase in virulence**. Carry out the test according to general chapter *5.2.6* using cats that do not have antibodies against feline calicivirus. If the properties of the vaccine virus allow sequential passage through 5 groups via natural spreading, this method may be used, otherwise passage as described below is carried out.

Administer to each cat of the 1st group by a route to be recommended a quantity of the vaccine virus that will allow recovery of virus for the passages described below. Administer the virus by the route to be recommended for vaccination most likely to lead to reversion of virulence. After 5 days, remove the nasal mucus, tonsils and trachea of each cat. Mix, homogenise in 10 mL of buffered saline and allow the solids to settle. Administer the supernatant by the intranasal route to each cat of the next group. Carry out this passage operation 4 times; verify the presence of the virus at each passage. If the virus is not found at a passage level, repeat the passage by administration to a group of 10 animals.

If the 5th group of animals shows no evidence of an increase in virulence indicative of reversion during the observation period, further testing is not required. Otherwise, carry out an additional safety test and compare the clinical signs and any relevant parameters in a group of at least 8 animals receiving the material used for the first passage and another similar group receiving the virus at the final passage level.

The vaccine virus complies with the test if no indication of increased virulence of the virus recovered for the final passage compared with the material used for the first passage is observed. If virus is not recovered after an initial passage in 2 animals and a subsequent repeat passage in 10 animals, the vaccine virus also complies with the test.

2-3-3. **Immunogenicity**. A test is carried out for each strain of feline calicivirus in the vaccine, for each route and method of administration to be recommended for vaccination. The quantity of vaccine virus to be administered to each cat is not greater than the minimum virus titre to be stated on the label and the virus is at the most attenuated passage level that will be present in a batch of vaccine.

Use for the test not fewer than 20 cats, 8-12 weeks old, that do not have antibodies against feline calicivirus. Vaccinate not fewer than 10 cats, according to the schedule to be recommended. Maintain not fewer than 10 cats as controls. Challenge each cat after 4 weeks by the intranasal route with a sufficient quantity of a suspension of virulent feline calicivirus virus. Observe the cats at least daily for 14 days after challenge. Collect nasal washings daily on days 2 to 14 to test for virus excretion. Note daily the body temperature and signs of disease using the scoring system shown below.

The test is not valid if during the observation period after challenge, fewer than 80 per cent of the control cats show notable signs of feline calicivirosis (hyperthermia, buccal ulcers, respiratory signs).

The vaccine virus complies with the test if during the observation period after challenge, the score for the vaccinated cats is significantly lower than that for the controls.

Observed signs	Score
Death	10
Depressed state	2
Temperature ≥ 39.5 °C	1
Temperature ≤ 37 °C	2
Ulcer (nasal or oral)	
– small and few in number	1
– large and numerous	3
Nasal discharge	
– slight	1
– copious	2
Ocular discharge	1
Weight loss	2
Virus excretion (total number of days):	
≤ 4 days	1
5-7 days	2
> 7 days	3

3. BATCH TESTS

3-1. **Identification**. When neutralised by one or more monospecific antisera, the vaccine no longer infects susceptible cell cultures into which it is inoculated.

3-2. **Bacteria and fungi**. The vaccine, including where applicable the diluent supplied for reconstitution, complies with the test for sterility prescribed in the monograph *Vaccines for veterinary use (0062)*.

3-3. **Mycoplasmas** (*2.6.7*). The vaccine complies with the test for mycoplasmas.

3-4. **Extraneous agents**. Neutralise the vaccine virus with one or more suitable monospecific antisera against feline calicivirus and inoculate into cell cultures known for their susceptibility to viruses pathogenic for the cat. Carry out at least 1 passage and maintain the cultures for 14 days. The vaccine complies with the test if no cytopathic effect develops and there is no sign of the presence of haemadsorbing agents.

3-5. **Virus titre**. Titrate the vaccine virus in suitable cell cultures at a temperature favourable to replication of the virus. The vaccine complies with the test if one dose contains not less than the minimum virus titre stated on the label.

3-6. **Potency**. The vaccine complies with the requirements of the test prescribed under Immunogenicity (section 2-3-3) when administered by a recommended route and method. It is not necessary to carry out the potency test for each batch of the vaccine if it has been carried out on a representative batch using a vaccinating dose containing not more than the minimum virus titre stated on the label.

04/2013:2324

FELINE CHLAMYDIOSIS VACCINE (INACTIVATED)

Vaccinum chlamydiosidis felinae inactivatum

1. DEFINITION

Feline chlamydiosis vaccine (inactivated) is a preparation of one or more suitable strains of *Chlamydophila felis*, which have been inactivated by a suitable method. This monograph applies to vaccines intended for administration to cats for active immunisation.

2. PRODUCTION

2-1. *PREPARATION OF THE VACCINE*

The seed material is cultured in embryonated hens' eggs from a healthy flock or in suitable cell cultures (*5.2.4*). If the vaccine contains more than one strain of bacterium, the different strains are grown and harvested separately. The bacterial harvests are inactivated using suitable and validated methods. The suspensions may be treated to fragment the micro-organisms and the fragments may be purified and concentrated. The vaccine may contain adjuvants.

2-2. *CHOICE OF VACCINE COMPOSITION*

The vaccine is shown to be satisfactory with respect to safety (*5.2.6*) and efficacy (*5.2.7*) in cats for which it is intended.

The following tests for safety (section 2-2-1) and immunogenicity (section 2-2-2) may be used during the demonstration of safety and efficacy.

2-2-1. **Safety**. Carry out the test for each route and method of administration to be recommended for vaccination. Use a batch of vaccine containing not less than the maximum potency that may be expected in a batch of vaccine.

For each test, use not fewer than 8 cats of the minimum age to be recommended for vaccination and that do not have antibodies against *C. felis*. Administer to each cat 1 dose of the vaccine. If the schedule to be recommended requires a 2nd dose, administer 1 dose after an interval of at least 14 days.

Observe the cats at least daily for at least 14 days after the last administration.

The vaccine complies with the test if no cat shows abnormal local or systemic reactions or dies from causes attributable to the vaccine.

2-2-2. **Immunogenicity**. Carry out the test for each route and method of administration to be recommended for vaccination, using in each case cats not older than the minimum age to be recommended for vaccination. The vaccine to be administered to each cat is of minimum potency.

Vaccinate 10 cats that are free from antibodies against *C. felis* and keep 10 cats as controls. Not later than 4 weeks after the last administration of vaccine, administer by a suitable route to each cat a quantity of a virulent strain of *C. felis* sufficient to produce in susceptible cats typical signs of disease such as conjunctivitis and nasal discharge. Observe the cats for 28 days. Where reduction of chlamydophila excretion is to be claimed, collect nasal washings and/or conjunctival swabs on days 7, 14, 17, 21, 24 and 28 after challenge to test for chlamydophila excretion. The duration of excretion for the vaccinated animals is significantly lower than for the controls. Note daily the body temperature and signs of disease using a suitable scoring system. The vaccine complies with the test if the score for the vaccinated cats is significantly lower than that for the controls.

2-3. *MANUFACTURER'S TESTS*

2-3-1. **Batch potency test**. It is not necessary to carry out the potency test (section 3-4) for each batch of the vaccine if it has been carried out using a batch of vaccine with a minimum potency. Where the test is not carried out on a batch, an alternative validated method is used, the criteria for acceptance being set with reference to a batch of vaccine that has given satisfactory results in the potency test (section 3-4). The following test may be used.

Inject a suitable dose by a suitable route into each of 5 seronegative cats or another suitable species. Where the schedule stated on the label requires a booster injection to be given, a booster vaccination may also be given in this test provided it has been demonstrated that this will still provide a suitably sensitive test system. Before the vaccination and at a given interval usually within the range of 14-21 days after the last injection, collect blood from each animal and prepare serum samples. Determine individually for each serum the titre of antibodies against each strain stated on the label, using

a suitable test such as enzyme-linked immunosorbent assay (*2.7.1*). The vaccine complies with the test if the antibody levels are not significantly lower than those obtained for a batch that has given satisfactory results in the potency test (section 3-4).

2-3-2. **Bacterial endotoxins**. A test for bacterial endotoxins (*2.6.14*) is carried out on the final lot or, where the nature of the adjuvant prevents performance of a satisfactory test, on the bulk antigen or the mixture of bulk antigens immediately before addition of the adjuvant. The maximum acceptable amount of bacterial endotoxins is that found for a batch of vaccine that has been shown to be satisfactory in the safety test (section 2-2-1). The method chosen for determining the maximum acceptable amount of bacterial endotoxins is subsequently used for the testing of each batch.

3. BATCH TESTS

3-1. **Identification**. When injected into seronegative animals, the vaccine stimulates the production of antibodies against each of the strains of *C. felis* present in the vaccine.

3-2. **Residual live chlamydophila**. The vaccine complies with a suitable test for residual live chlamydophila.

3-3. **Bacteria and fungi**. The vaccine, including where applicable the diluent supplied for reconstitution, complies with the test for sterility prescribed in the monograph *Vaccines for veterinary use (0062)*.

3-4. **Potency**. The vaccine complies with the test for immunogenicity (section 2-2-2).

04/2013:0794

FELINE INFECTIOUS ENTERITIS (FELINE PANLEUCOPENIA) VACCINE (INACTIVATED)

Vaccinum panleucopeniae felinae infectivae inactivatum

1. DEFINITION

Feline infectious enteritis (feline panleucopenia) vaccine (inactivated) is a preparation of a suitable strain of feline panleucopenia virus or canine parvovirus inactivated while maintaining adequate immunogenic properties. This monograph applies to vaccines intended for the active immunisation of cats against feline infectious enteritis (feline panleucopenia).

2. PRODUCTION

2-1. *PREPARATION OF THE VACCINE*

The vaccine virus is grown in cell cultures. The virus harvest is inactivated. The vaccine may be adjuvanted.

2-2. *SUBSTRATE FOR VIRUS PROPAGATION*

2-2-1. **Cell cultures**. The cell cultures comply with the requirements for cell cultures for production of veterinary vaccines (*5.2.4*).

2-3. *CHOICE OF VACCINE COMPOSITION*

The vaccine is shown to be satisfactory with respect to safety (*5.2.6*) and efficacy (*5.2.7*) for the cats for which it is intended.

The following tests for safety (section 2-3-1) and immunogenicity (section 2-3-2) may be used during the demonstration of safety and efficacy.

2-3-1. **Safety**. Carry out the test for each route and method of administration to be recommended for vaccination. Use a batch of vaccine containing not less than the maximum potency that may be expected in a batch of vaccine.

For each test, use not fewer than 8 cats of the minimum age to be recommended for vaccination and that do not have antibodies against feline panleucopenia virus. Administer to each cat 1 dose of the vaccine. If the schedule to be recommended requires a 2nd dose, administer 1 dose after an interval of at least 14 days. Observe the cats at least daily for at least 14 days after the last administration.

The vaccine complies with the test if no cat shows abnormal local or systemic reactions or dies from causes attributable to the vaccine.

2-3-2. **Immunogenicity**. A test is carried out for each route and method of administration to be recommended for vaccination, using in each case cats 8-12 weeks old. The vaccine administered to each cat is of minimum potency.

Use for the test not fewer than 10 cats that do not have antibodies against feline panleucopenia virus and canine parvovirus. Vaccinate not fewer than 5 cats, according to the schedule to be recommended. Maintain not fewer than 5 cats as controls. Carry out leucocyte counts 8 days and 4 days before challenge and calculate the mean of the 2 counts to serve as the initial value. Challenge each cat after 20-22 days by the intraperitoneal route with a sufficient quantity of a suspension of virulent feline panleucopenia virus. Observe the cats at least daily for 14 days after challenge. Carry out leucocyte counts on the 4th, 6th, 8th and 10th days after challenge.

The test is not valid if during the observation period after challenge, fewer than 100 per cent of the control cats show on not fewer than one occasion a diminution in the number of leucocytes of at least 75 per cent of the initial value or die from panleucopenia. The vaccine complies with the test if during the observation period after challenge, all the vaccinated cats survive and show no signs of disease nor leucopenia; that is to say, the diminution in the number of leucocytes does not exceed, in any of the 4 counts, 50 per cent of the initial value.

2-4. *MANUFACTURER'S TESTS*

2-4-1. **Residual live virus**. The test for residual live virus is carried out using a quantity of inactivated virus harvest equivalent to not less than 100 doses of the vaccine by a validated method such as the following: inoculate into suitable non-confluent cells and after incubation for 8 days, make a subculture using trypsinised cells. After incubation for a further 8 days, examine the cultures for residual live parvovirus by an immunofluorescence test. The immunofluorescence test may be supplemented by a haemagglutination test or other suitable tests on the supernatant of the cell cultures. The inactivated viral harvest complies with the test if no live virus is detected.

2-4-2. **Batch potency test**. For routine testing of batches of vaccine, a test based on production of haemagglutination-inhibiting antibodies in guinea-pigs may be used instead of test 3-3-1 or 3-3-2 described under Potency if a satisfactory correlation with the test for immunogenicity has been established.

3. BATCH TESTS

3-1. **Identification**. When injected into animals, the vaccine stimulates the production of antibodies against the parvovirus present in the vaccine.

3-2. **Bacteria and fungi**. The vaccine, including where applicable the diluent supplied for reconstitution, complies with the test for sterility prescribed in the monograph *Vaccines for veterinary use (0062)*.

3-3. **Potency**. Carry out test 3-3-1 or test 3-3-2.

3-3-1. *Test in cats for haemagglutination-inhibiting antibodies*. Use for the test not fewer than 4 cats, 8-12 weeks old, that do not have antibodies against feline panleucopenia virus and canine parvovirus. Vaccinate not fewer than 2 cats with 1 dose of the vaccine. Maintain not fewer than 2 cats as controls. After 21 days, draw a blood sample from each cat and separate the serum from each sample. Inactivate each serum by heating at 56 °C for 30 min. To 1 volume of each serum add 9 volumes of a 200 g/L suspension of *light kaolin R* in *phosphate buffered saline pH 7.4 R*. Shake each

Vaccines

mixture for 20 min. Centrifuge, collect the supernatant and mix with 1 volume of a concentrated suspension of pig erythrocytes. Allow to stand at 4 °C for 60 min and centrifuge. The dilution of the serum obtained is 1:10. Using each serum, prepare a series of twofold dilutions. To 0.025 mL of each of the latter dilutions add 0.025 mL of a suspension of canine parvovirus or feline panleucopenia virus antigen containing 4 haemagglutinating units. Allow to stand at 37 °C for 30 min and add 0.05 mL of a suspension of pig erythrocytes containing 30×10^6 cells per millilitre. Allow to stand at 4 °C for 90 min and note the last dilution of serum that still completely inhibits haemagglutination.

The test is not valid if either control cat develops antibodies against canine parvovirus or feline panleucopenia virus. The vaccine complies with the test if both vaccinated cats have developed titres of at least 1:20.

3-3-2. *Test in cats for virus-neutralising antibodies.* Use for the test not fewer than 2 cats, 8-12 weeks old, that have antibody titres less than $4ND_{50}$ per 0.1 mL of serum measured by the method described below. Vaccinate each cat according to the recommended schedule. 14 days after vaccination, examine the serum of each cat as follows. Heat the serum at 56 °C for 30 min and prepare serial dilutions using a medium suitable for feline cells. Add to each dilution an equal volume of a virus suspension containing an amount of virus such that when the volume of serum-virus mixture appropriate for the assay system is inoculated into cell cultures, each culture receives approximately 10^4 $CCID_{50}$. Incubate the mixtures at 37 °C for 1 h and inoculate 4 feline cell cultures with a suitable volume of each mixture. Incubate the cell cultures at 37 °C for 7 days, passage and incubate for a further 7 days. Examine the cultures for evidence of specific cytopathic effects and calculate the antibody titre.

The vaccine complies with the test if the mean titre is not less than 32 ND_{50} per 0.1 mL of serum. If one cat fails to respond, repeat the test using 2 more cats and calculate the result as the mean of the titres obtained from all of the 3 cats that have responded.

04/2013:0251

FELINE INFECTIOUS ENTERITIS (FELINE PANLEUCOPENIA) VACCINE (LIVE)

Vaccinum panleucopeniae felinae infectivae vivum

1. DEFINITION

Feline infectious enteritis (feline panleucopenia) vaccine (live) is a preparation of a suitable strain of feline panleucopenia virus. This monograph applies to vaccines intended for the active immunisation of cats against feline infectious enteritis (feline panleucopenia).

2. PRODUCTION

2-1. *PREPARATION OF THE VACCINE*

The vaccine virus is grown in cell cultures.

2-2. *SUBSTRATE FOR VIRUS PROPAGATION*

2-2-1. **Cell cultures**. The cell cultures comply with the requirements for cell cultures for production of veterinary vaccines (*5.2.4*).

2-3. *CHOICE OF VACCINE VIRUS*

The vaccine virus is shown to be satisfactory with respect to safety (*5.2.6*) and efficacy (*5.2.7*) for the cats for which it is intended, including safety for pregnant queens if the vaccine may be used in such queens. If the virus is excreted in the faeces, the effect in pregnant queens must be documented.

The following tests for safety (section 2-3-1), increase in virulence (section 2-3-2) and immunogenicity (section 2-3-3) may be used during the demonstration of safety and efficacy.

2-3-1. **Safety**. Carry out the test for each route and method of administration to be recommended for vaccination. Use vaccine virus at the least attenuated passage level that will be present in a batch of the vaccine.

2-3-1-1. *General safety.* For each test, use not fewer than 5 cats of the minimum age to be recommended for vaccination and that do not have antibodies against feline panleucopenia virus and canine parvovirus. Make counts of leucocytes in circulating blood on days 8 and 4 before injection of the vaccine virus and calculate the mean of the 2 counts to serve as the initial value. Administer to each cat a quantity of the vaccine virus equivalent to not less than 10 times the maximum virus titre likely to be contained in 1 dose of the vaccine. Observe the cats at least daily for at least 14 days. Make leucocyte counts on the 4th, 6th, 8th and 10th days after inoculation.

The vaccine virus complies with the test if no cat shows abnormal local or systemic reactions, signs of disease or dies from causes attributable to the vaccine virus and if, for each cat and each blood count, the number of leucocytes is not less than 50 per cent of the initial value.

2-3-1-2. *Safety in pregnant queens.* If the vaccine is intended for use or may be used in pregnant queens, use not fewer than 5 queens per group, at the stage of pregnancy to be recommended or at a range of stages of pregnancy according to the schedule to be recommended. Administer to each queen a quantity of vaccine virus at least equivalent to the maximum virus titre likely to be contained in 1 dose of the vaccine. Observe the queens at least daily until 1 day after parturition and observe their kittens until at least the age of 3 weeks.

The vaccine virus complies with the test if no queen shows abnormal local or systemic reactions, signs of disease or dies from causes attributable to the vaccine virus and if no adverse effects on the pregnancy or the offspring, such as foetal resorption or ataxia in the kittens, are noted.

2-3-2. **Increase in virulence**. Carry out the test according to general chapter *5.2.6* using cats of the minimum age to be recommended for vaccination and that do not have antibodies against feline panleucopenia virus and canine parvovirus. If the properties of the vaccine virus allow sequential passage through 5 groups via natural spreading, this method may be used, otherwise passage as described below is carried out.

Administer to each cat of the 1st group by a route to be recommended a quantity of the vaccine virus that will allow recovery of virus for the passages described below. Collect the faeces from each cat from the 2nd to the 10th day after administration of the virus, check them for the presence of the virus and pool the faeces containing virus. Administer 1 mL of the suspension of pooled faeces by either the oral or the intranasal route to each cat of the next group. Carry out this passage operation not fewer than 4 times; verify the presence of the virus at each passage. If the virus is not found at a passage level, repeat the passage by administration to a group of 10 animals.

If the 5th group of animals shows no evidence of an increase in virulence indicative of reversion during the observation period, further testing is not required. Otherwise, carry out an additional safety test and compare the clinical signs and any relevant parameters (count of white blood cells, results of histological examination of the thymus and titre of excreted virus) in a group of at least 8 animals receiving the material used for the 1st passage and another similar group receiving the virus at the final passage level.

The vaccine virus complies with the test if no cat dies or shows signs attributable to the vaccine virus and no indication of increasing virulence of the virus recovered for the final passage compared with the material used for the 1st passage is observed. Account is taken, notably, of the count of white

blood cells, of results of histological examination of the thymus and of the titre of excreted virus. If virus is not recovered after an initial passage in 2 animals and a subsequent repeat passage in 10 animals, the vaccine virus also complies with the test.

2-3-3. **Immunogenicity**. A test is carried out for each route and method of administration to be recommended for vaccination. The quantity of vaccine virus to be administered to each cat is not greater than the minimum virus titre to be stated on the label and the virus is at the most attenuated passage level that will be present in a batch of vaccine.

Use for the test not fewer than 10 cats, 8-12 weeks old, that do not have antibodies against feline panleucopenia virus and canine parvovirus. Vaccinate not fewer than 5 cats, according to the schedule to be recommended. Maintain not fewer than 5 cats as controls. Carry out leucocyte counts 8 days and 4 days before challenge and calculate the mean of the 2 counts to serve as the initial value. Challenge each cat after 20-22 days by the intraperitoneal route with a sufficient quantity of a suspension of virulent feline panleucopenia virus. Observe the cats at least daily for 14 days after challenge. Carry out leucocyte counts on the 4th, 6th, 8th and 10th days after challenge.

The test is not valid if during the observation period after challenge, fewer than 100 per cent of the control cats show, on fewer than one occasion, a diminution in the number of leucocytes of at least 75 per cent of the initial value or die from feline panleucopenia. The vaccine virus complies with the test if during the observation period after challenge, all the vaccinated cats survive and show no signs of disease nor leucopenia; that is to say, the diminution in the number of leucocytes does not exceed, in any of the 4 counts, 50 per cent of the initial value.

3. BATCH TESTS

3-1. **Identification**. Carry out replication of the vaccine virus in a susceptible cell line in a substrate suitable for a fluorescent antibody test or peroxidase test. Prepare suitable controls. Test a proportion of the cells with monoclonal antibodies specific for feline panleucopenia virus and a proportion with monoclonal antibodies specific for canine parvovirus. Feline panleucopenia virus is detected but no canine parvovirus is detected in the cells inoculated with the vaccine.

3-2. **Bacteria and fungi**. The vaccine, including where applicable the diluent supplied for reconstitution, complies with the test for sterility prescribed in the monograph *Vaccines for veterinary use (0062)*.

3-3. **Mycoplasmas** (*2.6.7*). The vaccine complies with the test for mycoplasmas.

3-4. **Extraneous agents**. Neutralise the vaccine virus with a suitable monospecific antiserum against feline panleucopenia virus and inoculate into cell cultures known for their susceptibility to viruses pathogenic for the cat. Carry out at least 1 passage and maintain the cultures for 14 days. The vaccine complies with the test if no cytopathic effect develops and there is no sign of the presence of haemadsorbing agents.

3-5. **Virus titre**. Titrate the vaccine virus in suitable cell cultures. The vaccine complies with the test if one dose contains not less than the minimum virus titre stated on the label.

3-6. **Potency**. The vaccine complies with the requirements of the test prescribed under Immunogenicity (section 2-3-3) when administered by a recommended route and method. It is not necessary to carry out the potency test for each batch of the vaccine if it has been carried out on a representative batch using a vaccinating dose containing not more than the minimum virus titre stated on the label.

04/2013:1321

FELINE LEUKAEMIA VACCINE (INACTIVATED)

Vaccinum leucosis felinae inactivatum

1. DEFINITION

Feline leukaemia vaccine (inactivated) is a preparation of immunogens from a suitable strain of feline leukaemia virus. This monograph applies to vaccines intended for the active immunisation of cats against feline leukaemia.

2. PRODUCTION

2-1. *PREPARATION OF THE VACCINE*

The immunogens consist either of a suitable strain of feline leukaemia virus inactivated while maintaining adequate immunogenic properties or of a fraction of the virus with adequate immunogenic properties; the immunogenic fraction may be produced by recombinant DNA technology. The vaccine may be adjuvanted.

2-2. *CHOICE OF VACCINE COMPOSITION*

The vaccine is shown to be satisfactory with respect to safety (*5.2.6*) and efficacy (*5.2.7*) for the cats for which it is intended. The following tests for safety (section 2-2-1) and immunogenicity (section 2-2-2) may be used during the demonstration of safety and efficacy.

2-2-1. **Safety**. Carry out the test for each route and method of administration to be recommended for vaccination. Use a batch of vaccine containing not less than the maximum potency that may be expected in a batch of vaccine.

2-2-1-1. *General safety and immunosuppression*. Use for the test not fewer than 15 cats of the minimum age to be recommended and that do not have antibodies against gp 70 antigen of feline leukaemia virus nor display viraemia or antigenaemia at the time of the test; absence of antibodies and antigen is demonstrated by enzyme-linked immunosorbent assay (*2.7.1*). Administer to each of not fewer than 10 cats 1 dose of the vaccine. If the schedule to be recommended requires a 2nd dose, administer 1 dose after an interval of at least 14 days. Maintain not fewer than 5 cats as controls. Record the body temperature of each cat on the day before each vaccination, at the time of vaccination, 4 h and 8 h later, and once per day during the 4 following days. Observe the cats at least daily for not less than 4 weeks after the last vaccination. 1, 2 and 4 weeks after the last vaccination, submit the cats to suitable tests for evidence of an immunosuppressive effect.

The vaccine complies with the test if no cat shows abnormal local or systemic reactions or dies from causes attributable to the vaccine and if no significant difference is observed in vaccinated cats compared with controls regarding immunosuppressive effect.

2-2-2. **Immunogenicity**. A test is carried out for each route and method of administration to be recommended, using in each case cats of the minimum age to be recommended for vaccination. The vaccine administered to each cat is of minimum potency.

Use for the test not fewer than 25 cats that do not have antibodies against the antigens of feline leukaemia virus and against the feline oncogene membrane antigen (anti-FOCMA antibodies), and showing no viraemia or antigenaemia at the time of the test. Vaccinate not fewer than 15 cats according to the schedule to be recommended. Maintain not fewer than 10 cats as controls. Observe the cats at least daily for 14 days after the last administration. Challenge each cat by the peritoneal or oronasal route, on one or several occasions, with a sufficient quantity of suspension of an epidemiologically relevant virulent strain of feline leukaemia virus, consisting predominantly of type A virus. Observe the cats at least daily for 15 weeks and, from the 3rd week onwards, test

Vaccines

each week for viraemia or antigenaemia (p27 protein) by suitable methods such as immunofluorescence on circulating leucocytes or enzyme-linked immunosorbent assay. A cat is considered persistently infected if it shows positive viraemia or antigenaemia for 3 consecutive weeks or on 5 occasions, consecutively or not, between the 3rd and the 15th week.

The test is not valid if during the observation period after challenge, fewer than 80 per cent of the control cats show persistant viraemia or antigenaemia. The vaccine complies with the test if during the observation period after challenge, not fewer than 80 per cent of the vaccinated cats show no persistent infection.

2-3. *IN-PROCESS CONTROL TESTS*

During production, suitable immunochemical tests are carried out for the evaluation of the quality and purity of the viral antigens included in the vaccine composition. The values found are within the limits approved for the particular vaccine.

2-4. *MANUFACTURER'S TESTS*

2-4-1. **Residual live virus**. Where applicable, the test for residual live virus is carried out using a quantity of inactivated virus harvest equivalent to not less than 25 doses of vaccine and 2 passages in the same type of cell cultures as used for the production of the vaccine or in cell cultures shown to be at least as sensitive. The inactivated viral harvest complies with the test if no live virus is detected.

2-4-2. **Batch potency test**. It is not necessary to carry out the Potency test (section 3-4) for each batch of vaccine if it has been carried out using a batch of vaccine with a minimum potency. Where the test is not carried out, an alternative validated method is used, the criteria for acceptance being set with reference to a batch of vaccine that has given satisfactory results in the test described under Potency.

2-4-3. **Bacterial endotoxins**. For vaccines produced by recombinant DNA technology with a bacterial host cell such as *Escherichia coli*, a test for bacterial endotoxins (*2.6.14*) is carried out on each final lot or, where the nature of the adjuvant prevents performance of a satisfactory test, on the antigen immediately before addition of the adjuvant. The value found is within the limit approved for the particular vaccine and which has been shown to be safe for cats.

3. BATCH TESTS

3-1. **Identification**. When injected into healthy cats that do not have specific antibodies against the antigen or antigens stated on the label, the vaccine stimulates the production of such antibodies.

3-2. **Bacteria and fungi**. The vaccine, including where applicable the diluent supplied for reconstitution, complies with the test for sterility prescribed in the monograph *Vaccines for veterinary use (0062)*.

3-3. **Residual live virus**. If the vaccine contains inactivated virus, carry out a test for residual live feline leukaemia virus by making 2 passages on susceptible cell cultures. The vaccine complies with the test if no virus is detected. If the vaccine contains an adjuvant, if possible separate the adjuvant from the liquid phase by a method that does not inactivate the virus nor interfere in any other way with the detection of virus.

3-4. **Potency**. The vaccine complies with the requirements of the test prescribed under Immunogenicity (section 2-2-2) when administered by a recommended route and method.

04/2013:1207

FELINE VIRAL RHINOTRACHEITIS VACCINE (INACTIVATED)

Vaccinum rhinotracheitidis viralis felinae inactivatum

1. DEFINITION

Feline viral rhinotracheitis vaccine (inactivated) is a preparation of a suitable strain of feline rhinotracheitis virus (feline herpesvirus 1), inactivated while maintaining adequate immunogenic properties, or of an inactivated fraction of the virus having adequate immunogenic properties. This monograph applies to vaccines intended for the active immunisation of cats against feline viral rhinotracheitis.

2. PRODUCTION

2-1. *PREPARATION OF THE VACCINE*

The vaccine virus is grown in cell cultures. The virus harvest is inactivated; the virus may be disrupted and the fractions purified and concentrated. The vaccine may be adjuvanted.

2-2. *SUBSTRATE FOR VIRUS PROPAGATION*

2-2-1. **Cell cultures**. The cell cultures comply with the requirements for cell cultures for production of veterinary vaccines (*5.2.4*).

2-3. *CHOICE OF VACCINE COMPOSITION*

The vaccine is shown to be satisfactory with respect to safety (*5.2.6*) and efficacy (*5.2.7*) for the cats for which it is intended.

The following tests for safety (section 2-3-1) and immunogenicity (section 2-3-2) may be used during the demonstration of safety and efficacy.

2-3-1. **Safety**. Carry out the test for each route and method of administration to be recommended for vaccination. Use a batch of vaccine containing not less than the maximum potency that may be expected in a batch of vaccine.

For each test, use not fewer than 8 cats of the minimum age to be recommended for vaccination and that do not have antibodies against feline herpesvirus 1 or against a fraction of the virus. Administer to each cat 1 dose of the vaccine.

If the schedule to be recommended requires a 2nd dose, administer 1 dose after an interval of at least 14 days after the last administration. Observe the cats at least daily for at least 14 days after the last administration. The vaccine complies with the test if no cat shows abnormal local or systemic reactions or dies from causes attributable to the vaccine.

2-3-2. **Immunogenicity**. A test is carried out for each route and method of administration to be recommended for vaccination, using in each case cats 8-12 weeks old. The vaccine administered to each cat is of minimum potency.

Use for the test not fewer than 20 cats that do not have antibodies against feline herpesvirus 1 or against a fraction of the virus. Vaccinate not fewer than 10 cats, according to the schedule to be recommended. Maintain not fewer than 10 cats as controls. Challenge each cat after 4 weeks by the intranasal route with a quantity of a suspension of virulent feline herpesvirus 1 sufficient to produce typical signs of the disease such as fever, nasal discharge and cough in a cat that does not have antibodies against feline herpesvirus 1 or a fraction of the virus. Observe the cats at least daily for 14 days after challenge. Collect nasal washings daily on days 2 to 14 after challenge to test for virus excretion. Note daily the body temperature and signs of disease using the scoring system shown below.

The vaccine complies with the test if the score for the vaccinated cats is significantly lower than that for the controls.

Sign	Score
Death	10
Depressed state	2
Temperature:	
39.5 °C - 40.0 °C	1
≥ 40.0 °C	2
≤ 37.0 °C	3
Glossitis	3
Nasal discharge, slight	1
Nasal discharge, copious	2
Cough	2
Sneezing	1
Sneezing, paroxysmal	2
Ocular discharge, slight	1
Ocular discharge, serious	2
Conjunctivitis	2
Weight loss ≥ 5.0 per cent	5
Virus excretion (total number of days):	
≤ 4 days	1
5-7 days	2
> 7 days	3

2-4. *MANUFACTURER'S TESTS*

2-4-1. **Residual live virus**. The test for residual live virus is carried out using 2 passages in cell cultures of the same type as those used for preparation of the vaccine or in cell cultures shown to be at least as sensitive; the quantity of inactivated virus harvest used in the test is equivalent to not less than 25 doses of vaccine. The inactivated viral harvest complies with the test if no live virus is detected.

2-4-2. **Batch potency test**. It is not necessary to carry out the Potency test (section 3-4) for each batch of vaccine if it has been carried out using a batch of vaccine with a minimum potency. Where the test is not carried out, an alternative validated method is used, the criteria for acceptance being set with reference to a batch of vaccine that has given satisfactory results in the test described under Potency. The following test may be used.

Use for the test a group of 15 seronegative mice. Administer to each mouse half a dose of the vaccine and, 7 days later, repeat the administration. 21 days after the first injection, take blood samples and determine the level of antibodies against feline herpesvirus 1 by a suitable immunochemical method (*2.7.1*), such as an immunofluorescence technique using pools of serum from groups of 3 mice. The vaccine complies with the test if the antibody levels are not significantly lower than those obtained with a batch of vaccine that has given satisfactory results in the test described under Potency.

3. BATCH TESTS

3-1. **Identification**. When administered to animals that do not have specific antibodies against feline herpesvirus 1 or against the fraction of the virus used to produce the vaccine, the vaccine stimulates the production of such antibodies.

3-2. **Bacteria and fungi**. The vaccine, including where applicable the diluent supplied for reconstitution, complies with the test for sterility prescribed in the monograph *Vaccines for veterinary use (0062)*.

3-3. **Residual live virus**. Carry out a test for residual live feline herpesvirus 1 using 10 doses of vaccine and 2 passages in cell cultures of the same type as those used for preparation of the vaccine, or in other suitably sensitive cell cultures. The vaccine complies with the test if no live virus is detected. If the vaccine contains an adjuvant that interferes with the test, where possible separate the adjuvant from the liquid phase by a method that does not inactivate or otherwise interfere with detection of live virus.

3-4. **Potency**. The vaccine complies with the requirements of the test prescribed under Immunogenicity (section 2-3-2) when administered by a recommended route and method.

04/2013:1206

FELINE VIRAL RHINOTRACHEITIS VACCINE (LIVE)

Vaccinum rhinotracheitidis viralis felinae vivum

1. DEFINITION

Feline viral rhinotracheitis vaccine (live) is a preparation of a suitable strain of feline rhinotracheitis virus (feline herpesvirus 1). This monograph applies to vaccines intended for the active immunisation of cats against feline viral rhinotracheitis.

2. PRODUCTION

2-1. *PREPARATION OF THE VACCINE*

The vaccine virus is grown in cell cultures.

2-2. *SUBSTRATE FOR VIRUS PROPAGATION*

2-2-1. **Cell cultures**. The cell cultures comply with the requirements for cell cultures for production of veterinary vaccines (*5.2.4*).

2-3. *CHOICE OF VACCINE VIRUS*

The vaccine virus is shown to be satisfactory with respect to safety (*5.2.6*) and efficacy (*5.2.7*) for the cats for which it is intended.

The following tests for safety (section 2-3-1), increase in virulence (section 2-3-2) and immunogenicity (section 2-3-3) may be used during the demonstration of safety and efficacy.

2-3-1. **Safety**. Carry out the test for each route and method of administration to be recommended for vaccination. Use vaccine virus at the least attenuated passage level that will be present in a batch of the vaccine.

For each test, use not fewer than 8 cats of the minimum age to be recommended for vaccination and that do not have antibodies against feline herpesvirus 1. Administer to each cat a quantity of the vaccine virus equivalent to not less than 10 times the maximum virus titre likely to be contained in 1 dose of the vaccine. Observe the cats at least daily for at least 14 days.

The vaccine virus complies with the test if no cat shows abnormal local or systemic reactions or signs of disease, or dies from causes attributable to the vaccine virus.

2-3-2. **Increase in virulence**. Carry out the test according to general chapter *5.2.6* using cats that do not have antibodies against feline herpesvirus 1. If the properties of the vaccine virus allow sequential passage through 5 groups via natural spreading, this method may be used, otherwise passage as described below is carried out.

Administer to each cat of the 1st group by a route to be recommended a quantity of the vaccine virus that will allow recovery of virus for the passages described below. Administer the virus by the route to be recommended for vaccination most likely to lead to reversion of virulence. After 2-4 days, remove the nasal mucus, tonsils and local lymphatic ganglia and the trachea of each cat. Mix, homogenise in 10 mL of buffered saline and allow the solids to settle. Administer 1 mL of the supernatant by the intranasal route to each cat of the next group. Carry out this passage operation not fewer than

Vaccines

4 times; verify the presence of the virus at each passage. If the virus is not found at a passage level, repeat the passage by administration to a group of 10 animals.

If the 5th group of animals shows no evidence of an increase in virulence indicative of reversion during the observation period, further testing is not required. Otherwise, carry out an additional safety test and compare the clinical signs and any relevant parameters in a group of at least 8 animals receiving the material used for the first passage and another similar group receiving the virus at the final passage level.

The vaccine virus complies with the test if no indication of increased virulence of the virus recovered for the final passage compared with the material used for the first passage is observed. If virus is not recovered after an initial passage in 2 animals and a subsequent repeat passage in 10 animals, the vaccine virus also complies with the test.

2-3-3. **Immunogenicity**. A test is carried out for each route and method of administration to be recommended for vaccination. The quantity of vaccine virus to be administered to each cat is not greater than the minimum virus titre to be stated on the label and the virus is at the most attenuated passage level that will be present in a batch of vaccine.

Use for the test not fewer than 20 cats, 8-12 weeks old, that do not have antibodies against feline herpesvirus 1. Vaccinate not fewer than 10 cats, according to the schedule to be recommended. Maintain not fewer than 10 cats as controls. Challenge each cat after 4 weeks by the intranasal route with a quantity of a suspension of virulent feline herpesvirus 1 sufficient to cause typical signs of disease such as fever, nasal discharge and cough. Observe the cats at least daily for 14 days after challenge. Collect nasal washings daily on days 2 to 14 after challenge to test for virus excretion. Note daily the body temperature and signs of disease using the scoring system shown below.

The vaccine virus complies with the test if, during the observation period after challenge, the score for the vaccinated cats is significantly lower than that for the controls.

Sign	Score
Death	10
Depressed state	2
Temperature:	
39.5 °C - 40.0 °C	1
≥ 40.0 °C	2
≤ 37.0 °C	3
Glossitis	3
Nasal discharge, slight	1
Nasal discharge, copious	2
Cough	2
Sneezing	1
Sneezing, paroxysmal	2
Ocular discharge, slight	1
Ocular discharge, serious	2
Conjunctivitis	2
Weight loss ≥ 5.0 per cent	5
Virus excretion (total number of days):	
≤ 4 days	1
5-7 days	2
> 7 days	3

3. BATCH TESTS

3-1. **Identification**. When mixed with a monospecific antiserum, the vaccine no longer infects susceptible cell cultures into which it is inoculated.

3-2. **Bacteria and fungi**. The vaccine, including where applicable the diluent supplied for reconstitution, complies with the test for sterility prescribed in the monograph *Vaccines for veterinary use (0062)*.

3-3. **Mycoplasmas** (*2.6.7*). The vaccine complies with the test for mycoplasmas.

3-4. **Extraneous agents**. Neutralise the vaccine virus with a suitable monospecific antiserum against feline herpesvirus 1 and inoculate into cell cultures known for their susceptibility to viruses pathogenic for the cat. Carry out at least 1 passage and maintain the cultures for 14 days. The vaccine complies with the test if no cytopathic effect develops and there is no sign of the presence of haemadsorbing agents.

3-5. **Virus titre**. Titrate the vaccine virus in suitable cell cultures and at a temperature favourable to replication of the virus. The vaccine complies with the test if 1 dose contains not less than the minimum virus titre stated on the label.

3-6. **Potency**. The vaccine complies with the requirements of the test prescribed under Immunogenicity (section 2-3-3) when administered by a recommended route and method. It is not necessary to carry out the potency test for each batch of the vaccine if it has been carried out on a representative batch using a vaccinating dose containing not more than the minimum virus titre stated on the label.

01/2008:0063

FOOT-AND-MOUTH DISEASE (RUMINANTS) VACCINE (INACTIVATED)

Vaccinum aphtharum epizooticarum inactivatum ad ruminantes

1. DEFINITION

Foot-and-mouth disease (ruminants) vaccine (inactivated) is a preparation containing one or more serotypes of foot-and-mouth disease virus inactivated while maintaining adequate immunogenic properties. This monograph applies to vaccines intended for active immunisation of ruminants against foot-and-mouth disease.

2. PRODUCTION

2-1. *PREPARATION OF THE VACCINE*

The vaccine virus is grown in cell cultures and then separated from cellular material by filtration or other suitable procedures. The harvested virus is inactivated in suitable conditions and may be concentrated and purified. It is used for the preparation of vaccine immediately or after storage at a temperature shown to be consistent with antigen stability. The vaccine is prepared from inactivated virus by blending with one or more adjuvants. For a given antigen, the quantity of 146S antigen blended in each batch of vaccine is not lower than that of a batch of vaccine that has been found satisfactory with respect to Immunogenicity.

2-2. *SUBSTRATE FOR VIRUS PROPAGATION*

2-2-1. **Cell cultures**. The cell cultures comply with the requirements for cell cultures for production of veterinary vaccines (*5.2.4*).

2-3. *VALIDATION OF THE INACTIVATION PROCEDURE*

During inactivation, the virus titre is monitored by a sensitive and reproducible technique. The inactivation procedure is not satisfactory unless the decrease in virus titre, plotted

logarithmically, is linear and extrapolation indicates that there is less than 1 infectious virus unit per 10^4 L of liquid preparation at the end of inactivation.

2-4. *CHOICE OF VACCINE COMPOSITION*

The vaccine is shown to be satisfactory with respect to safety (*5.2.6*) and efficacy (*5.2.7*) for each species for which it is intended.

The following tests for safety (section 2-4-1.) and immunogenicity (section 2-4-2.) may be used during the demonstration of safety and efficacy.

2-4-1. **Safety**

2-4-1-1. *General safety*. Carry out the test for each route and method of administration to be recommended for vaccination and in animals of each species for which the vaccine is intended, using in each case animals of the minimum age to be recommended. Use a batch of vaccine containing not less than the maximum potency that may be expected in a batch of vaccine.

For each test, use not fewer than 10 animals that do not have antibodies against foot-and-mouth disease virus. Administer to each animal a double dose of the vaccine. Observe the animals at least daily for 14 days.

The vaccine complies with the test if no animal shows abnormal local or systemic reactions or dies from causes attributable to the vaccine.

2-4-1-2. *Safety in pregnant animals*. If the vaccine is intended for use or may be used in pregnant animals, use not fewer than 10 pregnant animals at the beginning of each trimester for which the use is not contra-indicated. Administer to each animal a double dose of the vaccine. Observe the animals at least daily until parturition.

The vaccine complies with the test if no animal shows abnormal local or systemic reactions or dies from causes attributable to the vaccine and if no adverse effect on the pregnancy and offspring are noted.

2-4-2. **Immunogenicity**. The following test is suitable to demonstrate immunogenicity of the vaccine for cattle. The potency of the vaccine is expressed as the number of 50 per cent cattle protective doses (PD_{50}) contained in the dose stated on the label. The PD_{50} is determined in cattle given primary vaccination and challenged by the inoculation of 10 000 ID_{50} of virulent bovine virus of the same serotype as that used in the preparation of the vaccine in the conditions described below. The vaccine virus may be used for challenge.

Carry out an immunogenicity test for each serotype of foot-and-mouth disease virus that may be included in the vaccine. The immunogenicity test carried out for a particular serotype will be valid for other vaccines provided that they have the same basic composition and that they have a batch potency with regard to that particular serotype that is not lower than that of the vaccine that has given satisfactory results in the test described below.

Each test is carried out for each route and method of administration to be recommended for vaccination, using in each case cattle not less than 6 months old. The vaccine administered to each animal is of minimum potency.

Use for the test not fewer than 17 cattle obtained from areas free from foot-and-mouth disease, that have never been vaccinated against foot-and-mouth disease and do not have antibodies neutralising the different serotypes of foot-and-mouth disease virus. Vaccinate not fewer than 3 groups of not fewer than 5 cattle per group, using a different dose of the vaccine for each group. Administer the different doses by injecting different volumes of the vaccine and not by dilution of the vaccine. For example, if the label states that the injection of 2 mL corresponds to the administration of 1 dose of vaccine, a 1/4 dose of vaccine would be obtained by injecting 0.5 mL, and a 1/10 dose would be obtained by injecting 0.2 mL. Maintain 2 cattle as controls. Challenge all the cattle after 3 weeks by the intradermal route, into 2 sites on the upper surface of the tongue (0.1 mL per site), with a dose equivalent to approximately 10 000 ID_{50} of a suspension of a fully virulent virus, obtained from cattle and of the same serotype as that used in the preparation of the vaccine. Observe the cattle at least daily for 8 days and then euthanise. Unprotected cattle show lesions at sites other than the tongue. Protected cattle may display lingual lesions.

The test is not valid if both control cattle do not show lesions on at least 3 feet. From the number of protected cattle in each group, calculate the PD50 content of the vaccine. The vaccine complies with the test if the potency is not less than that to be stated on the label; the minimum potency to be stated on the label is not less than 3 PD_{50} per dose for cattle.

2-5. *MANUFACTURER'S TESTS*

2-5-1. **Identification**. The bulk inactivated antigen is identified by a suitable immunochemical method (*2.7.1*).

2-5-2. **Residual live virus**. The limit of detection of the cell cultures to be used with respect to the virus to be tested is established by determining the number of $CCID_{50}$ and the 146S antigen content of a sample of live virus. The cells are not suitable if an amount of virus corresponding to 1 µg of 146S antigen has less than 10^6 $CCID_{50}$. A proportion of each batch of bulk inactivated antigen representing at least 200 doses is tested for freedom from live virus by inoculation into suitable cell cultures. A passage is made during culture of the cells. For this purpose, the sample of the inactivated antigen may be concentrated to allow testing of such large samples in cell cultures. It must be shown that the selected concentration and assay systems are not detrimental to detection of infectious virus within the test sample and that the concentrated inactivated antigen does not interfere with virus replication or cause toxic changes. A positive control is included in each test.

2-5-3. **Antigen content**. The 146S antigen content of each batch of bulk inactivated antigen is determined by an *in vitro* method (for example, by sucrose density gradient centrifugation and ultraviolet spectrophotometry at 259 nm).

2-5-4. **Batch potency test**. It is not necessary to carry out the Potency test (section 3-4.) for each batch of vaccine if it has been carried out using a batch of vaccine with a minimum potency. Where the test is not carried out, an alternative validated method is used, the criteria for acceptance being set with reference to a batch of vaccine that has given satisfactory results in the test described under Potency and has been shown to be satisfactory with respect to immunogenicity in the target species.

The following test may be used after a satisfactory pass level for a given antigen has been established. Once a pass level has been established for a given antigen, the same level may be used when this antigen is formulated in combination with any other provided that the formulation of the vaccine differs only in the antigens included.

2-5-4-1. *Vaccines for use in cattle*. Use cattle of the minimum age recommended for vaccination obtained from areas free from foot-and-mouth disease, that have never been vaccinated against foot-and-mouth disease and do not have antibodies neutralising the different serotypes of foot-and-mouth disease virus. Vaccinate not fewer than 5 cattle by a recommended route. Use a suitable dose of the vaccine for each animal. After a defined period, not greater than 28 days following vaccination, draw a blood sample and determine individually in each serum the level of antibodies against each serotype used in the preparation of the vaccine by a validated technique (e.g. sero-neutralisation test, ELISA). The vaccine complies with the test if titres at least equal to the pass level are measured in not fewer than 50 per cent of the cattle.

2-5-4-2. *Vaccines for use in other ruminants*. The potency of each batch shall be demonstrated in a suitable, validated test. A test in cattle, following the procedures outlined above for vaccines for use in cattle, may be suitable.

EMERGENCY USE: in situations of extreme urgency and subject to agreement by the competent authority, a batch of vaccine may be released before completion of the tests and the determination of potency if a test for sterility has been carried out on the bulk inactivated antigen and all other components of the vaccine and if the test for safety and the determination of potency have been carried out on a representative batch of vaccine prepared from the same bulk inactivated antigen. In this context, a batch is not considered to be representative unless it has been prepared with not more than the amount of antigen or antigens and with the same formulation as the batch to be released.

3. BATCH TESTS

3-1. **Identification**. The serum of an animal that did not have antibodies against foot-and-mouth disease virus prior to being immunised with the vaccine neutralises the serotypes of the virus used to prepare the vaccine, when tested by a suitably sensitive method.

3-2. **Bacteria and fungi**. The vaccine and, where applicable, the liquid supplied with it comply with the test for sterility prescribed in the monograph *Vaccines for veterinary use (0062)*.

3-3. **Safety**. Use 2 non-vaccinated animals of one of the species for which the vaccine is intended, not less than 6 months old, that do not have antibodies against foot-and-mouth disease virus and coming from regions free from foot-and-mouth disease. Administer to each animal by a recommended route a double dose of the vaccine. Observe the animals at least daily for 14 days.

The vaccine complies with the test if no animal shows notable signs of disease or dies from causes attributable to the vaccine.

3-4. **Potency**. The vaccine complies with the requirements of the test mentioned under Immunogenicity (section 2-4-2.) when administered by a recommended route and method.

04/2013:1945

FOWL CHOLERA VACCINE (INACTIVATED)

Vaccinum cholerae aviariae inactivatum

1. DEFINITION

Fowl cholera vaccine (inactivated) is a preparation of one or more suitable strains of one or more serovars of *Pasteurella multocida*, inactivated while maintaining adequate immunogenic properties. This monograph applies to vaccines intended for the active immunisation of chickens, turkeys, ducks and geese against acute fowl cholera.

2. PRODUCTION

2-1. *PREPARATION OF THE VACCINE*

The seed material is cultured in a suitable medium. If the vaccine contains more than one strain of bacterium, the different strains are grown and harvested separately. The bacterial harvests are inactivated. The vaccine may be adjuvanted.

2-2. *CHOICE OF VACCINE COMPOSITION*

The vaccine is shown to be satisfactory with respect to safety (*5.2.6*) and efficacy (*5.2.7*) for the species for which it is intended.

The following tests for safety (section 2-2-1) and immunogenicity (section 2-2-2) may be used during the demonstration of safety and efficacy.

2-2-1. **Safety**. The test is carried out for each route of administration to be recommended for vaccination and for each avian species for which the vaccine is intended. Use a batch of vaccine containing not less than the maximum potency that may be expected in a batch of vaccine.

For each test performed in birds younger than 3 weeks of age, use not fewer than 10 birds not older than the minimum age to be recommended for vaccination. For each test performed in birds older than 3 weeks of age, use not fewer than 8 birds not older than the minimum age to be recommended for vaccination. In the case of chickens, use chickens from a flock free from specified pathogens (SPF) (*5.2.2*) and in the case of turkeys, ducks or geese, use birds that have not been vaccinated and that do not have antibodies against *P. multocida*. Administer by a route and method to be recommended to each bird 1 dose of vaccine. If the schedule to be recommended requires a 2nd dose, administer 1 dose to each bird after an interval of at least 14 days. Observe the birds at least daily for at least 14 days for the last administration of the vaccine.

The test is not valid if more than 10 per cent of the birds younger than 3 weeks of age show abnormal signs of disease or die from causes not attributable to the vaccine. For birds older than 3 weeks of age, the test is not valid if non-specific mortality occurs.

The vaccine complies with the test if no bird shows abnormal signs of disease or dies from causes attributable to the vaccine.

2-2-2. **Immunogenicity**. The test is carried out for each route and method of administration to be recommended for vaccination, for each avian species for which the vaccine is intended and for each serovar of *P. multocida* against which protection is claimed. Use for each test not fewer than 30 birds not older than the minimum age to be recommended for vaccination. Use birds that have not been vaccinated and that are free from antibodies against *P. multocida*. For each test, administer to each of not fewer than 20 birds a quantity of the vaccine not greater than 1 dose. If re-vaccination is recommended, repeat this operation after the recommended interval. Maintain not fewer than 10 birds as controls. Challenge each of the birds of both groups 21 days after the last administration by the intramuscular route with a sufficient quantity of virulent *P. multocida*. Observe the birds for 14 days after challenge.

The test is not valid if during the observation period after challenge, fewer than 70 per cent of the control birds die or show signs of infection (such as either clinical signs or bacterial re-isolation in organs) or if during the period before challenge, more than 10 per cent of the birds from the control group or from the vaccinated group show abnormal signs of disease or die from causes not attributable to the vaccine.

The vaccine complies with the test if, at the end of the observation period after challenge, not fewer than 70 per cent of the birds from the vaccinated group survive and show no signs of disease. Mild signs that do not persist beyond the observation period may be tolerated.

2-3. *MANUFACTURER'S TESTS*

2-3-1. **Batch potency test**. It is not necessary to carry out the potency test (section 3-3) for each batch of vaccine if it has been carried out using a batch of vaccine with minimum potency. Where the test is not carried out, an alternative validated method is used, the criteria for acceptance being set with reference to a batch of vaccine that has given satisfactory results in the test described under Potency. The following test may be used.

Use not fewer than 15 SPF chickens (*5.2.2*), 3-4 weeks old. Collect serum samples from each vaccinated and control chicken just before vaccination and check for the absence of antibodies against each serovar of *P. multocida* in the vaccine. Administer to each of 10 chickens 1 dose of the vaccine by the subcutaneous route. Maintain 5 chickens as controls. Collect

serum samples 5 weeks after vaccination from each vaccinated and control chicken. Measure the titres of serum antibodies against each serovar of *P. multocida* stated on the label using a suitable validated serological method. Calculate the mean titres for the group of vaccinates.

The test is not valid if specific *P. multocida* antibodies are found: before vaccination in 1 or more sera from chickens to be vaccinated or from controls; in 1 or more sera from control chickens 5 weeks after the time of administration of the vaccine.

The vaccine complies with the test if the mean antibody titres of the group of vaccinates are equal to or greater than the titres obtained with a batch that has given satisfactory results in the test described under Potency.

2-3-2. **Bacterial endotoxins**. A test for bacterial endotoxins (*2.6.14*) is carried out on the final lot or, where the nature of the adjuvant prevents performance of a satisfactory test, on the bulk antigen or the mixture of bulk antigens immediately before addition of the adjuvant. The maximum acceptable amount of bacterial endotoxins is that found for a batch of vaccine that has been shown satisfactory in safety test (section 2-2-1). The method chosen for determining the maximum acceptable amount of bacterial endotoxins is used subsequently for testing each batch.

3. BATCH TESTS

3-1. **Identification**. When injected into SPF chickens (*5.2.2*), the vaccine stimulates the production of antibodies against each of the serovars of *P. multocida* in the vaccine.

3-2. **Bacteria and fungi**. The vaccine, including where applicable the diluent supplied for reconstitution, complies with the test for sterility prescribed in the monograph *Vaccines for veterinary use (0062)*.

3-3. **Potency**. The vaccine complies with the requirements of the test mentioned under Immunogenicity (section 2-2-2) when administered by a recommended route and method.

LABELLING

The label states:

- the serovar(s) used to prepare the vaccine;
- the serovar(s) against which protection is claimed.

04/2013:0649

FOWL-POX VACCINE (LIVE)

Vaccinum variolae gallinaceae vivum

1. DEFINITION

Fowl-pox vaccine (live) is a preparation of a suitable strain of avian pox virus. This monograph applies to vaccines intended for administration to chickens for active immunisation.

2. PRODUCTION

2-1. *PREPARATION OF THE VACCINE*

The vaccine virus is grown in embryonated hens' eggs or in cell cultures.

2-2. *SUBSTRATE FOR VIRUS PROPAGATION*

2-2-1. **Embryonated hens' eggs**. If the vaccine virus is grown in embryonated hens' eggs, they are obtained from flocks free from specified pathogens (SPF) (*5.2.2*).

2-2-2. **Cell cultures**. If the vaccine virus is grown in cell cultures, they comply with the requirements for cell cultures for production of veterinary vaccines (*5.2.4*).

2-3. *SEED LOTS*

2-3-1. **Extraneous agents**. The master seed lot complies with the tests for extraneous agents in seed lots (*2.6.24*). In these tests on the master seed lot, the organisms used are not more than 5 passages from the master seed lot at the start of the tests.

2-4. *CHOICE OF VACCINE VIRUS*

The vaccine virus shall be shown to be satisfactory with respect to safety (*5.2.6*) and efficacy (*5.2.7*) for the chickens for which it is intended.

The following tests for safety (section 2-4-1), increase in virulence (section 2-4-2) and immunogenicity (section 2-4-3) may be used during demonstration of safety and efficacy.

2-4-1. **Safety**. Carry out the test for each route and method of administration to be recommended for vaccination using in each case chickens not older than the minimum age to be recommended for vaccination from an SPF flock (*5.2.2*). Use vaccine virus at the least attenuated passage level that will be present in a batch of the vaccine.

For each test performed in chickens younger than 3 weeks of age, use not fewer than 10 chickens. For each test performed in chickens older than 3 weeks of age, use not fewer than 8 chickens. Administer to each chicken a quantity of the vaccine virus equivalent to not less than 10 times the maximum virus titre likely to be contained in 1 dose of the vaccine. Observe the chickens at least daily for at least 14 days.

The test is not valid if more than 10 per cent of the chickens younger than 3 weeks of age show abnormal signs of disease or die from causes not attributable to the vaccine. For chickens older than 3 weeks of age, the test is not valid if non-specific mortality occurs.

The vaccine virus complies with the test if no chicken shows abnormal signs of disease or dies from causes attributable to the vaccine virus.

2-4-2. **Increase in virulence**. Carry out the test according to general chapter *5.2.6* using chickens not older than the minimum age to be recommended for vaccination and from an SPF flock (*5.2.2*). If the properties of the vaccine virus allow sequential passage through 5 groups via natural spreading, this method may be used, otherwise, passage as described below is carried out.

Administer to each chicken of the 1st group by a suitable route a quantity of the vaccine virus that will allow recovery of virus for the passages described below. Prepare 4-7 days after administration a suspension from the induced skin lesions of each chicken and pool these samples. Administer 0.2 mL of the pooled samples by cutaneous scarification of the comb or other unfeathered part of the body, or by another suitable method to each chicken of the next group. Carry out this passage operation not fewer than 4 times; verify the presence of the virus at each passage. If the virus is not found at a passage level, repeat the passage by administration to a group of 10 chickens.

If the 5th group of chickens shows no evidence of an increase in virulence indicative of reversion during the observation period, further testing is not required. Otherwise, carry out an additional safety test and compare the clinical signs and any relevant parameters in a group of at least 10 chickens receiving the material used for the 1st passage and another similar group receiving the virus at the final passage level.

The vaccine virus complies with the test if no indication of increase in virulence of the virus at the final passage level compared with the material used for the 1st passage is observed. If virus is not recovered after an initial passage in 5 chickens and a subsequent repeat passage in 10 chickens, the vaccine virus also complies with the test.

2-4-3. **Immunogenicity**. A test is carried out for each route and method of administration to be recommended using in each case chickens not older than the minimum age to be recommended for vaccination. The quantity of the vaccine virus administered to each chicken is not greater than the minimum virus titre to be stated on the label and the virus is at the most attenuated passage level that will be present in a batch of the vaccine. Use for the test not fewer than 30 chickens of the same origin and from an SPF flock (*5.2.2*). Vaccinate by a route to be recommended not fewer than

20 chickens. Maintain not fewer than 10 chickens as controls. Challenge each chicken after 21 days by the feather-follicle route with a sufficient quantity of virulent fowl-pox virus. Observe the chickens at least daily for 21 days after challenge. Record the deaths and the number of surviving chickens that show clinical signs of disease. Examine each surviving chicken for macroscopic lesions: cutaneous lesions of the comb, wattle and other unfeathered areas of the skin and diphtherical lesions of the mucous membranes of the oro-pharyngeal area.

The test is not valid if:

- during the observation period after challenge fewer than 90 per cent of the control chickens die or show severe clinical signs of fowl pox, including notable macroscopical lesions of the skin or mucous membranes of the oro-pharyngeal area,
- and/or during the period between vaccination and challenge, more than 10 per cent of the control or vaccinated chickens show abnormal clinical signs or die from causes not attributable to the vaccine.

The vaccine virus complies with the test if during the observation period after challenge not less than 90 per cent of the vaccinated chickens survive and show no notable clinical signs of disease, including macroscopical lesions of the skin and mucous membranes of the oro-pharyngeal area.

3. BATCH TESTS

3-1. **Identification**. Carry out an immunostaining test in cell cultures to demonstrate the presence of the vaccine virus. For egg adapted strains, inoculate the vaccine into eggs and notice the characteristic lesions.

3-2. **Bacteria and fungi**. Vaccines intended for administration by injection, scarification or wing web piercing comply with the test for sterility prescribed in the monograph *Vaccines for veterinary use (0062)*.

Frozen or freeze-dried vaccines produced in embryonated eggs and not intended for administration by injection, scarification or wing web piercing either comply with the test for sterility prescribed in the monograph *Vaccines for veterinary use (0062)* or with the following test: carry out a quantitative test for bacterial and fungal contamination; carry out identification tests for microorganisms detected in the vaccine; the vaccine does not contain pathogenic microorganisms and contains not more than 1 non-pathogenic microorganism per dose.

Any diluent supplied for reconstitution of the vaccine complies with the test for sterility prescribed in the monograph *Vaccines for veterinary use (0062)*.

3-3. **Mycoplasmas**. The vaccine complies with the test for mycoplasmas (*2.6.7*).

3-4. **Extraneous agents**. The vaccine complies with the tests for extraneous agents in batches of finished product (*2.6.25*).

3-5. **Virus titre**. Titrate the vaccine virus by inoculation into embryonated hens' eggs from an SPF flock (*5.2.2*) or into suitable cell cultures (*5.2.4*). The vaccine complies with the test if 1 dose contains not less than the minimum virus titre stated on the label.

3-6. **Potency**. The vaccine complies with the requirements of the test prescribed under Immunogenicity (section 2-4-3) when administered according to the recommended schedule by a recommended route and method. It is not necessary to carry out the potency test for each batch of the vaccine if it has been carried out on a representative batch using a vaccinating dose containing not more than the minimum virus titre stated on the label.

04/2013:1521

FURUNCULOSIS VACCINE (INACTIVATED, OIL-ADJUVANTED, INJECTABLE) FOR SALMONIDS

Vaccinum furunculosidis inactivatum ad salmonidas cum adiuvatione oleosa ad iniectionem

1. DEFINITION

Furunculosis vaccine (inactivated, oil-adjuvanted, injectable) for salmonids is prepared from cultures of one or more suitable strains of *Aeromonas salmonicida* subsp. *salmonicida*, inactivated while maintaining adequate immunogenic properties. This monograph applies to vaccines intended for the active immunisation of salmonids against furunculosis.

2. PRODUCTION

2-1. *PREPARATION OF THE VACCINE*

The strains of *A. salmonicida* are cultured and harvested separately. The harvests are inactivated by a suitable method. They may be purified and concentrated. Whole or disrupted cells may be used and the vaccine may contain extracellular products of the bacterium released into the growth medium. The vaccine contains an oily adjuvant.

2-2. *CHOICE OF VACCINE STRAIN*

The strains included in the vaccine are shown to be suitable with respect to production of antigens of assumed protective importance. The vaccine is shown to be satisfactory with respect to safety (*5.2.6*) and efficacy (*5.2.7*) in the species of fish for which it is intended.

The following tests for safety (section 2-2-1) and immunogenicity (section 2-2-2) may be used during the demonstration of safety and efficacy.

2-2-1. **Safety**

2-2-1-1. *Laboratory test*. Carry out the test in each species of fish for which the vaccine is intended, using fish of the minimum body mass to be recommended for vaccination. Use a batch of vaccine containing not less than the maximum potency that may be expected in a batch of vaccine.

Use not fewer than 50 fish from a population that does not have specific antibodies against *A. salmonicida* subsp. *salmonicida* and has not been vaccinated against or exposed to furunculosis. The test is carried out in the conditions to be recommended for the use of the vaccine with a water temperature not less than 10 °C. Administer to each fish by the intraperitoneal route 1 dose of the vaccine. Observe the fish at least daily for 21 days.

The test is not valid if more than 6 per cent of the fish die from causes not attributable to the vaccine. The vaccine complies with the test if no fish shows abnormal local or systemic reactions or dies from causes attributable to the vaccine.

2-2-1-2. *Field studies*. Safety is also demonstrated in field trials by administering the intended dose to a sufficient number of fish in not fewer than 2 sets of premises. Samples of 30 fish are taken on 3 occasions (after vaccination, at the middle of the rearing period and at slaughter) and examined for local reactions in the body cavity. Moderate lesions involving localised adhesions between viscera or between viscera and the abdominal wall and slight opaqueness and/or sparse pigmentation of the peritoneum are acceptable. Extensive lesions including adhesions between greater parts of the abdominal organs, massive pigmentation and/or obvious thickening and opaqueness of greater areas of the peritoneum are unacceptable if they occur in more than 10 per cent of the fish in any sample. Such lesions include adhesions that give the viscera a 'one-unit' appearance and/or lead to manifest laceration of the peritoneum following evisceration.

2-2-2. **Immunogenicity**. Carry out the test according to a protocol defining limits of body mass for the fish, water source, water flow and temperature limits, and preparation of a standardised challenge. A test is carried out for the route and method of administration to be recommended. The vaccine administered to each fish is of minimum potency.

Use for the test not fewer than 60 fish from a population that does not have specific antibodies against *A. salmonicida* subsp. *salmonicida* and has not been vaccinated against or exposed to furunculosis. Vaccinate not fewer than 30 fish according to the instructions for use. Perform mock vaccination on a control group of not fewer than 30 fish; mark vaccinated and control fish for identification. Keep all the fish in the same tank or mix equal numbers of controls and vaccinates in each tank if more than one tank is used. Where justified and when fish cannot be marked, non-marked fish may be used. Vaccinates and controls may then be kept in the same tank but physically separated (for example by fishing nets). Challenge each fish, by injection, at a fixed interval after vaccination corresponding to the onset of immunity claimed, with a sufficient quantity of a culture of *A. salmonicida* subsp. *salmonicida* whose virulence has been verified. Observe the fish at least daily until at least 60 per cent specific mortality is reached in the control group. Plot for both vaccinates and controls a curve of specific mortality against time from challenge and determine by interpolation the time corresponding to 60 per cent specific mortality in controls.

The test is not valid if the specific mortality is less than 60 per cent in the control group 21 days after the 1st death in the fish. Read from the curve for vaccinates the mortality (*M*) at the time corresponding to 60 per cent mortality in controls. Calculate the relative percentage survival (RPS) using the following expression:

$$\left(1 - \frac{M}{60}\right) \times 100$$

The vaccine complies with the test if the RPS is not less than 80 per cent.

2-3. *MANUFACTURER'S TESTS*

2-3-1. **Batch potency test**. The potency test (section 3-3) may be carried out for each batch of vaccine using fish of one of the species for which the vaccine is intended. Where the test is not carried out, an alternative validated method based on antibody response may be used, the criteria for acceptance being set with reference to a batch of vaccine that has given satisfactory results in the test described under Potency. The following test may be used.

Use not fewer than 35 fish from a population that does not have specific antibodies against *A. salmonicida* subsp. *salmonicida* and that are within specified limits for body mass. Carry out the test at a defined temperature. Inject intraperitoneally into each of not fewer than 25 fish 1 dose of vaccine, according to the instructions for use. Perform mock vaccination on a control group of not fewer than 10 fish. Collect blood samples at a defined time after vaccination. Determine for each sample the level of specific antibodies against *A. salmonicida* subsp. *salmonicida* by a suitable immunochemical method (*2.7.1*). The test is not valid if the control group shows antibodies against *A. salmonicida* subsp. *salmonicida*. The vaccine complies with the test if the mean level of antibodies in the vaccinates is not significantly lower than that found for a batch that gave satisfactory results in the test described under Potency.

3. BATCH TESTS

3-1. **Identification**. When injected into fish that do not have specific antibodies against *A. salmonicida*, the vaccine stimulates the production of such antibodies.

3-2. **Bacteria and fungi**. The vaccine, including where applicable the diluent supplied for reconstitution, complies with the test for sterility prescribed in the monograph *Vaccines for veterinary use (0062)*.

3-3. **Potency**. The vaccine complies with the requirements of the test mentioned under Immunogenicity (section 2-2-2) when administered by the recommended route and method.

4. LABELLING

The label states information on the time needed for development of immunity after vaccination under the range of conditions corresponding to the recommended use.

04/2013:0696

INFECTIOUS BOVINE RHINOTRACHEITIS VACCINE (LIVE)

Vaccinum rhinotracheitidis infectivae bovinae vivum

1. DEFINITION

Infectious bovine rhinotracheitis vaccine (live) is a preparation of one or more suitable strains of infectious bovine rhinotracheitis virus (bovine herpesvirus 1). This monograph applies to vaccines intended for the active immunisation of cattle against bovine rhinotracheitis caused by bovine herpesvirus 1.

2. PRODUCTION

2-1. *PREPARATION OF THE VACCINE*

The vaccine virus is grown in cell cultures.

2-2. *SUBSTRATE FOR VIRUS PROPAGATION*

2-2-1. **Cell cultures**. The cell cultures comply with the requirements for cell cultures for production of veterinary vaccines (*5.2.4*).

2-3. *CHOICE OF VACCINE VIRUS*

The vaccine virus is shown to be satisfactory with respect to safety (*5.2.6*) and efficacy (*5.2.7*) for the cattle for which it is intended.

The following tests for safety (section 2-3-1), abortigenicity and passage through the placenta (section 2-3-2), increase in virulence (section 2-3-3) and immunogenicity (section 2-3-4) may be used during the demonstration of safety and efficacy.

2-3-1. **Safety**. Carry out the test for each route and method of administration to be recommended for vaccination. Use vaccine virus at the least attenuated passage level that will be present in a batch of the vaccine.

For each test, use not fewer than 5 calves, 3 months old or of the minimum age to be recommended for vaccination if this is less than 3 months, and that do not have antibodies against infectious bovine rhinotracheitis virus. Administer to each calf a quantity of the vaccine virus equivalent to not less than 10 times the maximum virus titre likely to be contained in 1 dose of the vaccine. Observe the calves at least daily for at least 14 days.

The vaccine virus complies with the test if no calf shows abnormal local or systemic reactions or dies from causes attributable to the vaccine virus.

2-3-2. **Abortigenicity and passage through the placenta**. Use not fewer than 24 pregnant cows that do not have antibodies against infectious bovine rhinotracheitis virus: 8 of the cows are in the 4th month of pregnancy, 8 in the 5th and 8 in the 6th or 7th month. Administer to each cow by a route to be recommended a quantity of the vaccine virus equivalent to

Vaccines

not less than 10 times the maximum virus titre likely to be contained in 1 dose of the vaccine. Observe the cows at least daily until the end of pregnancy.

The vaccine virus complies with the test if:

- where abortion occurs, tests show that neither virus nor viral antigens are present in the foetus or placenta;
- on calves born at term before ingestion of colostrum, a test for antibodies against infectious bovine rhinotracheitis virus indicates no such antibodies are found.

2-3-3. **Increase in virulence**. Carry out the test according to chapter *5.2.6. Evaluation of safety of veterinary vaccines and immunosera* using calves 3 months old or of the minimum age to be recommended for vaccination if this is less than 3 months, and that do not have antibodies against infectious bovine rhinotracheitis virus. If the properties of the vaccine virus allow sequential passage through 5 groups via natural spreading, this method may be used, otherwise passage as described below is carried out.

Take suitable samples from the calves used for the test for safety at a time when the vaccinal virus can be easily detected, verify the presence and titre of the virus in the samples and mix them. Administer to each calf of the 1st group by the intranasal route a quantity of the vaccine virus that will allow recovery of virus for the passages described below. Administer the virus by the intranasal route to each calf of the next group. Carry out this passage operation not fewer than 4 times; verify the presence of the virus at each passage. If the virus is not found at a passage level, repeat the passage by administration to a group of 10 animals.

If the 5th group of calves shows no evidence of an increase in virulence indicative of reversion during the observation period, further testing is not required. Otherwise, carry out an additional safety test and compare the clinical signs and any relevant parameters in a group of at least 8 animals receiving the material used for the 1st passage and another similar group receiving the virus at the final passage level.

The vaccine virus complies with the test if no indication of increased virulence of the virus recovered for the final passage compared with the material used for the 1st passage is observed. If virus is not recovered after an initial passage in 2 animals and a subsequent repeated passage in 10 animals, the vaccine virus also complies with the test.

2-3-4. **Immunogenicity**. A test is carried out for each route and method of administration to be recommended for vaccination using in each case calves 2-3 months old. The quantity of vaccine to be administered to each calf is not greater than the minimum virus titre to be stated on the label and the virus is at the most attenuated passage level that will be present in a batch of vaccine. Use for the test not fewer than 7 calves that do not have antibodies against infectious bovine rhinotracheitis virus. Vaccinate not fewer than 5 calves, according to the schedule to be recommended. Maintain not fewer than 2 calves as controls. Challenge each calf after 20-22 days by the intranasal route with a sufficient quantity of a virulent infectious bovine rhinotracheitis virus. Observe the calves at least daily for 21 days after challenge, in particular for respiratory signs and virus shedding (by nasal swabs or tracheobronchial washing).

The test is not valid if the controls do not show typical signs of disease such as fever, ocular and nasal discharge and ulceration of the nasal mucosa.

The vaccine virus complies with the test if, during the observation period after challenge:

- the vaccinated calves show no more than mild signs;
- in not fewer than 4 of the 5 vaccinated calves, the maximum virus titre found in the nasal mucus is at least 100 times lower than the average of the maximum titres found in the control calves; and
- the average number of days on which virus is excreted is at least 3 days less in vaccinated calves than in the control calves.

3. BATCH TESTS

3-1. **Identification**

3-1-1. When mixed with a suitable quantity of a monospecific antiserum, the vaccine is no longer able to infect susceptible cell cultures into which it is inoculated.

3-1-2. Any markers of the strain are verified.

3-2. **Bacteria and fungi**. The vaccine, including where applicable the diluent supplied for reconstitution, complies with the test for sterility prescribed in the monograph *Vaccines for veterinary use (0062)*.

3-3. **Mycoplasmas** (*2.6.7*). The vaccine complies with the test for mycoplasmas.

3-4. **Extraneous agents**. Neutralise the vaccine virus with a suitable monospecific antiserum against bovine rhinotracheitis virus and inoculate into cell cultures known for their susceptibility to viruses pathogenic for cattle. Carry out 1 passage at 7 days and maintain the cultures for 14 days.

The vaccine complies with the test if no cytopathic effect develops and there is no sign of the presence of haemadsorbing agents.

3-5. **Virus titre**. Titrate the vaccine virus in susceptible cell cultures at a temperature favourable to replication of the virus. The vaccine complies with the test if 1 dose contains not less than the minimum virus titre stated on the label.

3-6. **Potency**. The vaccine complies with the requirements of the test prescribed under Immunogenicity (section 2-3-4) when administered by a recommended route and method. It is not necessary to carry out the potency test for each batch of the vaccine if it has been carried out on a representative batch using a vaccinating dose containing not more than the minimum virus titre stated on the label.

04/2013:2038

INFECTIOUS CHICKEN ANAEMIA VACCINE (LIVE)

Vaccinum anaemiae infectivae pulli vivum

1. DEFINITION

Infectious chicken anaemia vaccine (live) is a preparation of a suitable strain of chicken anaemia virus. This monograph applies to vaccines intended for administration to breeder chickens for active immunisation, to prevent excretion of the virus, to prevent or reduce egg transmission and to protect passively their future progeny.

2. PRODUCTION

2-1. *PREPARATION OF THE VACCINE*

The vaccine virus is grown in embryonated hens' eggs or in cell cultures.

2-2. *SUBSTRATE FOR VIRUS PROPAGATION*

2-2-1. **Embryonated hens' eggs**. If the vaccine virus is grown in embryonated hens' eggs, they are obtained from flocks free from specified pathogens (SPF) (*5.2.2*).

2-2-2. **Cell cultures**. If the vaccine virus is grown in cell cultures, they comply with the requirements for cell cultures for production of veterinary vaccines (*5.2.4*).

2-3. *SEED LOTS*

2-3-1. **Extraneous agents**. The master seed lot complies with the test for extraneous agents in seed lots (*2.6.24*). In these tests on the master seed lot, the organisms used are not more than 5 passages from the master seed lot at the start of the tests.

2-4. *CHOICE OF VACCINE VIRUS*

The vaccine virus is shown to be satisfactory with respect to safety (*5.2.6*) and efficacy (*5.2.7*) for the chickens for which it is intended.

The following tests for safety (section 2-4-1), increase in virulence (section 2-4-2) and immunogenicity (section 2-4-3) may be used during the demonstration of safety and efficacy.

2-4-1. **Safety**. Carry out the test for each route and method of administration to be recommended for vaccination in chickens not older than the minimum age to be recommended for vaccination and from an SPF flock (*5.2.2*). Use vaccine virus at the least attenuated passage level that will be present in a batch of the vaccine.

2-4-1-1. *General safety*. For each test, use not fewer than 8 chickens. Administer to each chicken a quantity of the vaccine virus equivalent to not less than 10 times the maximum virus titre likely to be contained in 1 dose of the vaccine. 14 days after vaccination, collect blood samples from half of the chickens and determine the haematocrit value. Euthanise these chickens and carry out post-mortem examination. Note any pathological changes attributable to chicken anaemia virus, such as thymic atrophy and specific bone-marrow lesions. Observe the remaining chickens at least daily for at least 21 days.

The test is not valid if non-specific mortality occurs.

The vaccine virus complies with the test if during the observation period no chicken shows abnormal signs of disease or dies from causes attributable to the vaccine virus.

2-4-1-2. *Safety for young chickens*. Use not fewer than twenty 1-day-old chickens from an SPF flock (*5.2.2*). Administer to each chicken by the oculonasal route a quantity of the vaccine virus equivalent to not less than the maximum titre likely to be contained in 1 dose of the vaccine. Observe the chickens at least daily. Record the incidence of any signs attributable to the vaccine virus, such as depression, and any deaths. 14 days after vaccination, collect blood samples from half of the chickens and determine the haematocrit value. Euthanise these chickens and carry out post-mortem examination. Note any pathological changes attributable to chicken anaemia virus, such as thymic atrophy and specific bone marrow lesions. Observe the remaining chickens at least daily for at least 21 days. Assess the extent to which the vaccine strain is pathogenic for 1-day-old susceptible chickens from the results of the clinical observations and mortality rates and the proportion of chickens examined at 14 days that show anaemia (haematocrit value less than 27 per cent) and signs of infectious chicken anaemia on post-mortem examination. The results are used to formulate the label statement on safety for young chickens.

2-4-2. **Increase in virulence**. Carry out the test according to general chapter *5.2.6* using 1-day-old chickens from an SPF flock (*5.2.2*). If the properties of the vaccine virus allow sequential passage through 5 groups via natural spreading, this method may be used, otherwise passage as described below is carried out.

Administer to each chicken of the 1st group by the intramuscular route a quantity of the vaccine virus that will allow recovery of virus for the passages described below. Prepare 7-9 days after administration a suspension from the liver of each chicken and pool these samples. Depending on the tropism of the virus, other tissues such as spleen or bone marrow may be used. Administer 0.1 mL of the pooled samples by the intramuscular route to each chicken of the next group. Carry out this passage operation not fewer than 4 times; verify the presence of the virus at each passage. If the virus is not found at a passage level, repeat the passage by administration to a group of 10 chickens.

If the 5th group of chickens shows no evidence of an increase in virulence indicative of reversion during the observation period, further testing is not required. Otherwise, carry out an additional safety test and compare the clinical signs and any relevant parameters in a group of at least 10 chickens receiving the material used for the 1st passage and another similar group receiving the virus at the final passage level.

The vaccine virus complies with the test if no indication of increased virulence of the virus at the final passage level compared with the material used for the 1st passage is observed. If virus is not recovered after an initial passage in 5 chickens and a subsequent repeat passage in 10 chickens, the vaccine virus also complies with the test.

2-4-3. **Immunogenicity**. A test is carried out for each route and method of administration to be recommended for vaccination using chickens not older than the minimum age to be recommended for vaccination and from an SPF flock (*5.2.2*). The test for prevention of virus excretion is intended to demonstrate reduction of egg transmission through viraemia and virus excretion in the faeces. The quantity of the vaccine virus to be administered to each chicken is not greater than the minimum virus titre to be stated on the label and the virus is at the most attenuated passage level that will be present in a batch of vaccine.

2-4-3-1. *Passive immunisation of chickens*. Vaccinate according to the schedule to be recommended not fewer than 10 breeder chickens not older than the minimum age to be recommended for vaccination and from an SPF flock (*5.2.2*); keep not fewer than 10 unvaccinated breeder chickens of the same origin and from an SPF flock (*5.2.2*) as controls. At a suitable time after excretion of vaccine virus has ceased, collect fertilised eggs from each vaccinated and control breeder chicken and incubate them. Challenge at least 3 randomly chosen 1-day-old chickens from each vaccinated and control breeder chicken by intramuscular administration of a sufficient quantity of virulent chicken anaemia virus. Observe the chickens at least daily for 14 days after challenge. Record the deaths and the surviving chickens that show signs of disease. At the end of the observation period determine the haematocrit value of each surviving chicken. Euthanise these chickens and carry out post-mortem examination. Note any pathological signs attributable to chicken anaemia virus, such as thymic atrophy and specific bone-marrow lesions.

The test is not valid if:

- during the observation period after challenge fewer than 90 per cent of the chickens of the control breeder chickens die or show severe signs of infectious chicken anaemia, including haematocrit value under 27 per cent, and/or notable macroscopic lesions of the bone marrow and thymus;
- and/or during the period between vaccination and egg collection more than 10 per cent of vaccinated or control breeder chickens show notable signs of disease or die from causes not attributable to the vaccine.

The vaccine complies with the test if during the observation period after challenge not fewer than 90 per cent of the chickens of the vaccinated breeder chickens survive and show no notable signs of disease and/or macroscopic lesions of the bone marrow and thymus.

2-4-3-2. *Prevention of virus excretion*. Vaccinate according to the schedule to be recommended not fewer than 10 chickens not older than the minimum age to be recommended for vaccination and from an SPF flock (*5.2.2*). Maintain separately not fewer than 10 chickens of the same age and origin as controls. At a suitable time after excretion of vaccine virus has ceased, challenge all the chickens by intramuscular administration of a sufficient quantity of virulent chicken anaemia virus. Collect blood samples from the chickens on days 3, 5 and 7 after challenge and faecal samples from the chickens on days 7, 14 and 21 after challenge and carry out a test for presence of virus to determine whether or not the chickens are viraemic and are excreting the virus.

The test is not valid if:

- fewer than 70 per cent of the control chickens are viraemic and excrete the virus at one or more times of sampling;
- and/or during the period between vaccination and challenge more than 10 per cent of control or vaccinated chickens show abnormal clinical signs or die from causes not attributable to the vaccine.

The vaccine complies with the test if not fewer than 90 per cent of the vaccinated chickens do not develop viraemia or excrete the virus.

3. BATCH TESTING

3-1. **Identification**. The vaccine, diluted if necessary and mixed with a monospecific chicken anaemia virus antiserum, no longer infects susceptible cell cultures or eggs from an SPF flock (*5.2.2*) into which it is inoculated.

3-2. **Bacteria and fungi**. Vaccines intended for administration by injection comply with the test for sterility prescribed in the monograph *Vaccines for veterinary use (0062)*.

Frozen or freeze-dried vaccines produced in embryonated eggs and not intended for administration by injection either comply with the test for sterility prescribed in the monograph *Vaccines for veterinary use (0062)* or with the following test: carry out a quantitative test for bacterial and fungal contamination; carry out identification tests for microorganisms detected in the vaccine; the vaccine does not contain pathogenic microorganisms and contains not more than 1 non-pathogenic microorganism per dose.

Any diluent supplied for reconstitution of the vaccine complies with the test for sterility prescribed in the monograph *Vaccines for veterinary use (0062)*.

3-3. **Mycoplasmas**. The vaccine complies with the test for mycoplasmas (*2.6.7*).

3-4. **Extraneous agents**. The vaccine complies with the tests for extraneous agents in batches of finished product (*2.6.25*).

3-5. **Virus titre**. Titrate the vaccine virus by inoculation into suitable cell cultures (*5.2.4*) or eggs from an SPF flock (*5.2.2*). The vaccine complies with the test if 1 dose contains not less than the minimum virus titre stated on the label.

3-6. **Potency**. The vaccine complies with the requirements of the tests prescribed under Immunogenicity (sections 2-4-3-1 and 2-4-3-2) when administered by a recommended route and method. It is not necessary to carry out the potency test for each batch of the vaccine if it has been carried out on a representative batch using a vaccinating dose containing not more than the minimum virus titre stated on the label.

4. LABELLING

The label states to which extent the vaccine virus causes disease if it spreads to susceptible young chickens.

04/2013:1944

MANNHEIMIA VACCINE (INACTIVATED) FOR CATTLE

Vaccinum mannheimiae bovinae inactivatum

1. DEFINITION

Mannheimia vaccine (inactivated) for cattle is a preparation from cultures of one or more suitable strains of *Mannheimia haemolytica* (formerly *Pasteurella haemolytica*), inactivated while maintaining adequate immunogenic properties.
This monograph applies to vaccines intended for active immunisation of cattle of different ages against respiratory diseases caused by *M. haemolytica*.

2. PRODUCTION

2-1. *PREPARATION OF THE VACCINE*

Production of the vaccine is based on a seed-lot system. The seed material is cultured in a suitable medium; each strain is cultivated separately and identity is verified using a suitable method. During production, various parameters such as growth rate are monitored by suitable methods; the values are within the limits approved for the particular product. Purity and identity of the harvest are verified using suitable methods. After cultivation, the bacterial suspensions are collected separately and inactivated by a suitable method. The vaccine may be adjuvanted.

2-2. *CHOICE OF VACCINE COMPOSITION*

The choice of composition and the strains to be included in the vaccine is based on epidemiological data on the prevalence of the different serovars of *M. haemolytica* and on the claims being made.

The vaccine is shown to be satisfactory with respect to safety (*5.2.6*) and efficacy (*5.2.7*) for the cattle for which it is intended.

The following tests for safety (section 2-2-1) and immunogenicity (section 2-2-2) may be used during the demonstration of safety and efficacy.

2-2-1. **Safety**

2-2-1-1. *Laboratory tests*. Carry out the test for each route and method of administration to be recommended for vaccination and in cattle of each category for which the vaccine is intended (for example, young calves, pregnant cattle). Use a batch of vaccine containing not less than the maximum potency that may be expected in a batch of vaccine.

For each test, use not fewer than 8 cattle that preferably do not have antibodies against the serovars of *M. haemolytica* or against the leucotoxin present in the vaccine. Where justified, cattle with a known history of no previous mannheimia vaccination and with low antibody titres (measured in a sensitive test system such as ELISA) may be used. Administer to each animal 1 dose of the vaccine. If the schedule to be recommended requires a 2nd dose, administer another dose after an interval of at least 14 days. Observe the cattle at least daily for at least 14 days after the last administration. Record body temperature the day before vaccination, at vaccination, 2 h, 4 h and 6 h later and then daily for 4 days; note the maximum temperature increase for each animal.

The vaccine complies with the test if no animal shows abnormal local or systemic reactions or signs of disease, or dies from causes attributable to the vaccine, if the average body temperature increase for all cattle does not exceed 1.5 °C, and if no animal shows a rise greater than 2.0 °C.

2-2-1-2. *Field studies*. The cattle used for the field trials are also used to evaluate safety. Carry out a test in each category of cattle for which the vaccine is intended. Use not fewer than 3 groups of 20 cattle with corresponding groups of not fewer than 10 controls in 3 different locations. Examine the injection sites for local reactions after vaccination. Record body temperatures the day before vaccination, at vaccination and on the 2 days following vaccination.

The vaccine complies with the test if no animal shows abnormal local or systemic reactions or signs of disease, or dies from causes attributable to the vaccine. The average body temperature increase for all cattle does not exceed 1.5 °C and no animal shows a rise greater than 2.0 °C. In addition, if the vaccine is intended for use in pregnant cows, no significant effects on gestation or the offspring are demonstrated.

2-2-2. **Immunogenicity**. Carry out a test for each serovar for which protection is claimed on the label.

Each test is carried out for each route and method of administration to be recommended, using in each case cattle of the minimum age to be recommended for vaccination. The vaccine administered to each animal is of minimum potency.

Use not fewer than 16 cattle that do not have antibodies against *M. haemolytica* and against the leucotoxin of *M. haemolytica*. Vaccinate not fewer than 8 of the cattle according to the schedule to be recommended. Maintain not fewer than 8 cattle as controls. Challenge each animal 20-22 days after the last vaccination by the intratracheal route or by another appropriate route, with a sufficient quantity of a low-passage, virulent strain of a serovar of *M. haemolytica*. Observe the cattle at least daily for a further 7 days; to avoid unnecessary suffering, severely ill cattle are euthanised and are then considered to have died from the disease. During the observation period, examine the cattle for signs of disease (for example, increased body temperature, dullness, abnormal breathing) and record the mortality. Euthanise surviving cattle at the end of the observation period. Carry out post-mortem examination on any animal that dies and those euthanised at the end of the observation period. Examine the lungs and evaluate the extent of lung lesions due to mannheimiosis. Collect samples of lung tissue for re-isolation of the challenge organisms. Score the clinical observations and lung lesions and compare the results obtained for these parameters and the bacterial re-isolation results for the 2 groups.

The test is not valid if signs of *M. haemolytica* infection occur in less than 70 per cent of the control cattle. The vaccine complies with the test if there is a significant difference between the scores obtained for the clinical and post-mortem observations in the vaccinates compared to the controls. For vaccines with a claim for a beneficial effect on the extent of infection against the serovar, the results for the infection rates are also significantly better for the vaccinates compared to the controls.

2-3. *MANUFACTURER'S TESTS*

2-3-1. **Batch potency test**. It is not necessary to carry out the potency test (section 3-3) for each batch of vaccine if it has been carried out using a batch of vaccine with a minimum potency. Where the test is not carried out, an alternative validated method is used, the criteria for acceptance being set with reference to a batch of vaccine that has given satisfactory results in the test described under Potency.

2-3-2. **Bacterial endotoxins**. A test for bacterial endotoxins (*2.6.14*) is carried out on the final lot or, where the nature of the adjuvant prevents performance of a satisfactory test, on the bulk antigen or the mixture of bulk antigens immediately before addition of the adjuvant. The maximum acceptable amount of bacterial endotoxins is that found for a batch of vaccine that has been shown satisfactory in safety test 2-2-1-1 given under Choice of vaccine composition. The method chosen for determining the amount of bacterial endotoxin present in the vaccine batch used in the safety test for determining the maximum acceptable level of endotoxin is used subsequently for testing of each batch.

3. BATCH TESTS

3-1. **Identification**. When injected into healthy animals that do not have specific antibodies against the serovars of *M. haemolytica* and/or against the leucotoxin present in the vaccine, the vaccine stimulates the production of such antibodies.

3-2. **Bacteria and fungi**. The vaccine, including where applicable the diluent supplied for reconstitution, complies with the test for sterility prescribed in the monograph *Vaccines for veterinary use (0062)*.

3-3. **Potency**. The vaccine complies with the requirements of the test mentioned under Immunogenicity (section 2-2-2) when administered by a recommended route and method.

04/2013:1946

MANNHEIMIA VACCINE (INACTIVATED) FOR SHEEP

Vaccinum mannheimiae inactivatum ad ovem

1. DEFINITION

Mannheimia vaccine (inactivated) for sheep is a preparation of one or more suitable strains of *Mannheimia haemolytica* (formerly *Pasteurella haemolytica*), inactivated while maintaining adequate immunogenic properties. This monograph applies to vaccines intended for the active immunisation of sheep and/or for the passive protection of their progeny against disease caused by *M. haemolytica*.

2. PRODUCTION

2-1. *PREPARATION OF THE VACCINE*

Production of the vaccine is based on a seed-lot system. The seed material is cultured in a suitable medium; each strain is cultivated separately and identity is verified using a suitable method. During production, various parameters such as growth rate are monitored by suitable methods; the values are within the limits approved for the particular product. Purity and identity of the harvest are verified using suitable methods. After cultivation, the bacterial suspensions are collected separately and inactivated by a suitable method. The vaccine may be adjuvanted.

2-2. *CHOICE OF VACCINE COMPOSITION*

The choice of composition and the strains to be included in the vaccine are based on epidemiological data on the prevalence of the different serovars of *M. haemolytica* and on the claims being made for the product, for example active and/or passive protection.

The vaccine is shown to be satisfactory with respect to safety (*5.2.6*) and efficacy (*5.2.7*) for the sheep for which it is intended.

The following tests for safety (section 2-2-1) and immunogenicity (section 2-2-2) may be used during the demonstration of safety and efficacy.

2-2-1. **Safety**

2-2-1-1. *Laboratory tests*. Carry out the tests for each route and method of administration to be recommended for vaccination and in sheep of each category for which the vaccine is intended (for example, young sheep, pregnant ewes). Use a batch of vaccine containing not less than the maximum potency that may be expected in a batch of vaccine.

For each test, use not fewer than 8 sheep that preferably do not have antibodies against the serovars of *M. haemolytica* or against the leucotoxin present in the vaccine. Where justified, sheep with a known history of no previous mannheimia vaccination and with low antibody titres (measured in a sensitive test system such as ELISA) may be used. Administer to each sheep 1 dose of the vaccine. If the schedule to be recommended requires a 2nd dose, administer another dose after an interval of at least 14 days. Observe the sheep at least daily for at least 14 days after the last administration. If the test is carried out in pregnant ewes, observe the ewes until 1 day after lambing. Record body temperature the day before vaccination, at vaccination, 2 h, 4 h and 6 h later and then daily for 4 days; note the maximum temperature increase for each sheep.

The vaccine complies with the test if:

– no sheep shows abnormal local reactions or notable signs of disease, or dies from causes attributable to the vaccine,

Vaccines

– the average body temperature increase for all sheep does not exceed 1.5 °C and no sheep shows a rise greater than 2.0 °C, and if
– no adverse effects on gestation or the offspring are noted if the test is carried out in pregnant ewes.

2-2-1-2. *Field studies*. The sheep used for the field trials are also used to evaluate safety. Carry out a test in each category of sheep for which the vaccine is intended. Use not fewer than 3 groups of 20 sheep with corresponding groups of not fewer than 10 controls in 3 different locations. Examine the injection sites for local reactions after vaccination. Record body temperatures the day before vaccination, at vaccination and on the 2 days following vaccination.

The vaccine complies with the test if no sheep shows abnormal local or systemic reactions or notable signs of disease, or dies from causes attributable to the vaccine. The average body temperature increase for all sheep does not exceed 1.5 °C and no sheep shows a rise greater than 2.0 °C. In addition, if the vaccine is intended for use in pregnant ewes, no adverse effects on the gestation or offspring are demonstrated.

2-2-2. **Immunogenicity**

2-2-2-1. *Active immunisation*. For vaccines with claims for active immunisation against mannheimiosis, carry out a test for each serovar of *M. haemolytica* for which protection is to be claimed on the label.

A test is carried out for each route and method of administration to be recommended, using in each case lambs of the minimum age to be recommended for vaccination. The vaccine administered to each lamb is of minimum potency.

Use not fewer than 20 lambs that do not have antibodies against *M. haemolytica* and against the leucotoxin of *M. haemolytica*. Vaccinate not fewer than 10 lambs according to the schedule to be recommended. Maintain not fewer than 10 lambs as controls. 20-22 days after the last vaccination, challenge each lamb by the intratracheal route or by another appropriate route, with a sufficient quantity of a low-passage, virulent strain of a serovar of *M. haemolytica*. Where necessary for a given serovar, prechallenge with parainfluenza type 3 (PI3) virus or another appropriate respiratory pathogen may be used. Observe the lambs for a further 7 days; to avoid unnecessary suffering, severely ill lambs are euthanised and are then considered to have died from the disease. During the observation period, examine the lambs for signs of disease (for example, increased body temperature, dullness, abnormal respiration) and record the mortality. Euthanise surviving lambs at the end of the observation period. Carry out post-mortem examination on any lamb that dies and those euthanised at the end of the observation period. Examine the lungs and evaluate the extent of lung lesions due to mannheimiosis. Collect samples of lung tissue for re-isolation of the challenge organisms. Score the clinical observations and lung lesions and compare the results obtained for these parameters and the bacterial re-isolation results for the 2 groups.

The test is not valid if signs of *M. haemolytica* infection occur in less than 70 per cent of the control lambs. The vaccine complies with the test if there is a significant difference between the scores obtained for the clinical and post-mortem observations in the vaccinates compared to the controls. For vaccines with a claim for a beneficial effect on the extent of infection against the serovar, the results for the infection rates are also significantly better for the vaccinates compared to the controls.

2-2-2-2. *Passive protection*. For vaccines with claims for passive protection against mannheimiosis carry out a test for each serovar of *M. haemolytica* for which protection is to be claimed on the label.

A test is carried out for each route and method of administration to be recommended for vaccination. The vaccine administered to each ewe is of minimum potency.

Use not fewer than 6 ewes that preferably do not have antibodies against the serovars of *M. haemolytica* or against the leucotoxin present in the vaccine. Where justified, ewes with a known history of no previous mannheimia vaccination, from a source with a low incidence of respiratory disease and with low antibody titres (measured in a sensitive test system such as ELISA) may be used. Vaccinate the ewes at the stages of pregnancy and according to the schedule to be recommended. A challenge study is conducted with 20 newborn, colostrum-deprived lambs. 10 of these lambs are given colostrum from the vaccinated ewes and 10 control lambs are given colostrum or colostrum substitute without detectable antibodies to *M. haemolytica*. When the lambs are at the age to be claimed for the duration of the passive protection, challenge each by the intratracheal route with a sufficient quantity of a low-passage, virulent strain of a serovar of *M. haemolytica*. Observe the lambs for a further 7 days; to avoid unnecessary suffering, severely ill lambs are euthanised and are then considered to have died from the disease. Observe the lambs and assess the effect of the challenge on the offspring of the vaccinates and the controls as described in the test for active immunisation.

The test is not valid if signs or lesions of *M. haemolytica* infection occur in less than 70 per cent of the control lambs. The vaccine complies with the test if there is a significant difference between the scores obtained for the clinical and post-mortem observations in the lambs from the vaccinates compared to those from the controls. For vaccines with a claim for a beneficial effect on the extent of infection against the serovar, the results for the infection rates are also significantly better for the lambs from the vaccinates compared to those from the controls.

2-3. *MANUFACTURER'S TESTS*

2-3-1. **Batch potency test**. It is not necessary to carry out the relevant potency test or tests (section 3-3) for each batch of vaccine if they have been carried out using a batch of vaccine with a minimum potency. Where the relevant test or tests are not carried out, an alternative validated method is used, the criteria for acceptance being set with reference to a batch of vaccine that has given satisfactory results in the test(s) described under Potency.

2-3-2. **Bacterial endotoxins**. A test for bacterial endotoxins (*2.6.14*) is carried out on the final lot or, where the nature of the adjuvant prevents performance of a satisfactory test, on the bulk antigen or the mixture of bulk antigens immediately before addition of the adjuvant. The maximum acceptable amount of bacterial endotoxins is that found for a batch of vaccine that has been shown satisfactory in safety tests 2-2-1-1 given under Choice of vaccine composition. The method chosen for determining the amount of bacterial endotoxin present in the vaccine batch used in the safety test for determining the maximum acceptable level of endotoxin is used subsequently for testing of each batch.

3. BATCH TESTS

3-1. **Identification**. When injected into healthy animals that do not have specific antibodies against the serovars *M. haemolytica* and/or against the leucotoxin present in the vaccine, the vaccine stimulates the production of such antibodies.

3-2. **Bacteria and fungi**. The vaccine, including where applicable the diluent supplied for reconstitution, complies with the test for sterility prescribed in the monograph *Vaccines for veterinary use (0062)*.

3-3. **Potency**. The vaccine complies with the requirements of the test or test(s) mentioned under Immunogenicity (section 2-2-2) when administered by a recommended route and method.

04/2013:0589

MAREK'S DISEASE VACCINE (LIVE)

Vaccinum morbi Marek vivum

1. DEFINITION

Marek's disease vaccine (live) is a preparation of a suitable strain or strains of Marek's disease virus (gallid herpesvirus 2 or 3) and/or turkey herpesvirus (meleagrid herpesvirus 1). This monograph applies to vaccines intended for administration to chickens and/or chicken embryos for active immunisation.

2. PRODUCTION

2-1. *PREPARATION OF THE VACCINE*

The vaccine virus is grown in cell cultures. If the vaccine contains more than one type of virus, the different types are grown separately. The vaccine may be freeze-dried or stored in liquid nitrogen.

2-2. *SUBSTRATE FOR VIRUS PROPAGATION*

2-2-1. **Cell cultures**. The cell cultures comply with the requirements for cell cultures for production of veterinary vaccines (*5.2.4*).

2-3. *SEED LOTS*

2-3-1. **Extraneous agents**. The master seed lot complies with the tests for extraneous agents in seed lots (*2.6.24*). In these tests on the master seed lot, the organisms used are not more than 5 passages from the master seed lot at the start of the tests.

2-4. *CHOICE OF VACCINE VIRUS*

The vaccine virus shall be shown to be satisfactory with respect to safety (*5.2.6*) and efficacy (*5.2.7*) for the chickens and/or chicken embryos for which it is intended.

The tests shown below for residual pathogenicity of the strain (section 2-4-1-1), increase in virulence (section 2-4-2) and immunogenicity (section 2-4-3) may be used during the demonstration of safety and efficacy. Additional testing may be needed to demonstrate safety in breeds of chickens known to be particularly susceptible to Marek's disease virus, unless the vaccine is to be contra-indicated.

2-4-1. **Safety**

2-4-1-1. *Residual pathogenicity of the strain*. Carry out the test for the route to be recommended for vaccination that is likely to be the least safe and in the category of chickens for which the vaccine is intended that is likely to be the most susceptible for Marek's disease.

Carry out the test in chickens if the vaccine is intended for chickens; carry out the test in chicken embryos if the vaccine is intended for chicken embryos; carry out the test in chickens and in chicken embryos if the vaccine is intended for both.

Use vaccine virus at the least attenuated passage level that will be present between the master seed lot and a batch of the vaccine.

Vaccines intended for use in chickens. Use not fewer than 80 1-day-old chickens from a flock free from specified pathogens (SPF) (*5.2.2*). Divide them randomly into 2 groups of not fewer than 40 chickens and maintain the groups separately. Administer by a suitable route to each chicken of one group (I) a quantity of the vaccine virus equivalent to not less than 10 times the maximum virus titre likely to be contained in 1 dose of the vaccine. Administer by a suitable route to each chicken of the other group (II) a quantity of virulent Marek's disease virus that will cause mortality and/or severe macroscopic lesions of Marek's disease in not fewer than 70 per cent of the effective number of chickens within 70 days (initial number reduced by the number that die within the first 7 days of the test).

Vaccines intended for use in chicken embryos. Use not fewer than 150 embryonated eggs from an SPF flock (*5.2.2*). Divide them randomly into 3 groups of not fewer than 50 embryonated eggs and maintain the groups separately but under identical incubation conditions. Not later than the recommended day of vaccination, administer by the method to be recommended to each embryonated egg of one group (I) a quantity of the vaccine virus equivalent to not less than 10 times the maximum virus titre likely to be contained in 1 dose of the vaccine. Administer by a suitable route to each embryonated egg of another group (II) a quantity of virulent Marek's disease virus that will cause mortality and/or severe macroscopic lesions of Marek's disease in not fewer than 70 per cent of the effective number of hatched chickens within 70 days (initial number reduced by the number that die within the first 7 days after hatching). Keep the last group (III) non-inoculated. The test is not valid if there is a significant difference in hatchability between groups I and III and the hatchability in any of the 3 groups is less than 80 per cent.

Provided that the chickens and chicken embryos are derived from the same flock, a common control group for *in ovo* and parenteral administration can be used.

Irrespective of whether the vaccine was administered to chickens or chicken embryos, observe the chickens of group II at least daily for 70 days and those of group I at least daily for 120 days.

The test is not valid if one or more of the following apply:

- more than 10 per cent of the chickens in any of the 3 groups die within the first 7 days;
- fewer than 70 per cent of the effective number of chickens in group II show macroscopic lesions of Marek's disease;

The vaccine virus complies with the test if:

- no chicken of group I shows notable clinical signs or macroscopic lesions of Marek's disease or dies from causes attributable to the vaccine virus;
- at 120 days the number of surviving chickens of group I is not fewer than 80 per cent of the effective number.

2-4-2. **Increase in virulence**. The test for increase in virulence is required for Marek's disease virus vaccine strains but not for turkey herpesvirus vaccine strains, which are naturally apathogenic.

Carry out the test according to general chapter *5.2.6*.

Vaccines intended for use in chickens. Administer to each 1-day-old SPF chicken (*5.2.2*) by the intramuscular route a quantity of the vaccine virus that will allow recovery of virus for the passages described below.

Vaccines intended for use only in chicken embryos or intended for use in chickens and in chicken embryos. Administer to each embryonated egg not later than the recommended day for vaccination by the *in ovo* route, using the recommended method, a quantity of the vaccine virus that will allow recovery of virus for the passages described below.

If the properties of the vaccine virus allow sequential passage through 5 groups via natural spreading, this method may be used, otherwise passage as described below is carried out.

5-7 days after administering the vaccine to chickens or 5-7 days after hatching when the vaccine has been administered *in ovo*, prepare a suspension of white blood cells from each chicken and pool these samples. Administer a suitable volume of the pooled samples by the intraperitoneal route to each 1-day-old SPF chicken (*5.2.2*) of the next group. Carry out this passage operation not fewer than 4 times; verify the presence of the virus at each passage. If the virus is not found at a passage level, repeat the passage by administration to a group of 10 animals. Carry out the test for residual pathogenicity (section 2-4-1-1) using the material used for the 1st passage and the virus at the final passage level. Administer the virus by the route to be recommended for vaccination that is likely to be the least safe for use in these chickens or chicken embryos.

The vaccine virus complies with the test if no indication of increase in virulence of the virus recovered for the final passage compared with the material used for the 1st passage is observed. If virus is not recovered after an initial passage in 5 chickens or chicken embryos and a subsequent repeat passage in 10 chickens or chicken embryos, the vaccine virus also complies with the test.

2-4-3. **Immunogenicity**. A test is carried out for each route and method of administration to be recommended, using in each case chickens of the minimum age to be recommended for vaccination or chicken embryos. The quantity of the vaccine virus administered to each chicken or chicken embryo is not greater than the minimum virus titre to be stated on the label and the virus is at the most attenuated passage level that will be present in a batch of the vaccine.

Vaccines intended for use in chickens. Use not fewer than 60 chickens of the same origin and from an SPF flock (*5.2.2*). Vaccinate by a route to be recommended not fewer than 30 chickens. Maintain not fewer than 30 chickens as controls.

Vaccines intended for use in chicken embryos. Use embryonated chickens of the same origin and from an SPF flock (*5.2.2*). Vaccinate by the *in ovo* route using the method to be recommended, 50 per cent of the embryonated eggs. Maintain 50 per cent of the embryonated eggs as controls. The test is not valid if any group consists of fewer than 30 hatched chicks.

Irrespective of whether the vaccine was administered to chickens or chicken embryos, challenge each chicken not later than 9 days after vaccination by a suitable route with a sufficient quantity of virulent Marek's disease virus. Observe the chickens at least daily for 70 days after challenge. Record the deaths and the number of surviving chickens that show clinical signs of disease. At the end of the observation period, euthanise all the surviving chickens and carry out an examination for macroscopic lesions of Marek's disease.

The test is not valid if:

- during the observation period after challenge, fewer than 70 per cent of the control chickens die or show severe clinical signs or macroscopic lesions of Marek's disease;
- and/or, during the period between the vaccination and challenge, more than 10 per cent of the control or vaccinated chickens show abnormal clinical signs or die from causes not attributable to the vaccine.

The vaccine virus complies with the test if the relative protection percentage, calculated using the following expression, is not less than 80 per cent:

$$\frac{V - C}{100 - C} \times 100$$

V = percentage of challenged vaccinated chickens that survive to the end of the observation period without notable clinical signs or macroscopic lesions of Marek's disease;

C = percentage of challenged control chickens that survive to the end of the observation period without notable clinical signs or macroscopic lesions of Marek's disease.

3. BATCH TESTS

3-1. **Identification**. Carry out an immunostaining test in cell cultures using monoclonal antibodies to demonstrate the presence of each type of virus stated on the label.

3-2. **Bacteria and fungi**. The vaccine, including where applicable the diluent supplied for reconstitution, complies with the test for sterility prescribed in the monograph *Vaccines for veterinary use (0062)*.

3-3. **Mycoplasmas**. The vaccine complies with the test for mycoplasmas (*2.6.7*).

3-4. **Extraneous agents**. The vaccine complies with the tests for extraneous agents in batches of finished product (*2.6.25*).

3-5. **Virus titre**

3-5-1. *Vaccines containing one type of virus.* Titrate the vaccine virus by inoculation into suitable cell cultures (*5.2.4*). If the virus titre is determined in plaque-forming units (PFU), only primary plaques are taken into consideration. The vaccine complies with the test if one dose contains not less than the minimum virus titre stated on the label.

3-5-2. *Vaccines containing more than one type of virus.* For vaccines containing more than one type of virus, titrate each virus by inoculation into suitable cell cultures (*5.2.4*), reading the results by immunostaining using antibodies. The vaccine complies with the test if one dose contains for each vaccine virus not less than the minimum virus titre stated on the label.

3-6. **Potency**. The vaccine complies with the test for immunogenicity (section 2-4-3) when administered according to the recommended schedule by a recommended route and method. It is not necessary to carry out the potency test for each batch of the vaccine if it has been carried out on a representative batch using a vaccinating dose containing not more than the minimum virus titre stated on the label.

04/2013:1942

MYCOPLASMA GALLISEPTICUM VACCINE (INACTIVATED)

Vaccinum Mycoplasmatis galliseptici inactivatum

1. DEFINITION

Mycoplasma gallisepticum vaccine (inactivated) is a preparation of one or more suitable strains of *Mycoplasma gallisepticum* that have been inactivated while maintaining adequate immunogenic properties. This monograph applies to vaccines intended for the active immunisation of chickens and/or turkeys.

2. PRODUCTION

2-1. *PREPARATION OF THE VACCINE*

Production of the vaccine is based on a seed-lot system. The seed material is cultured in a suitable solid and/or liquid medium to ensure optimal growth under the chosen incubation conditions. Each strain is cultivated separately and identity is verified using a suitable method. During production, various parameters such as growth rate are monitored by suitable methods; the values are within the limits approved for the particular vaccine. Purity and identity of the harvest are verified using suitable methods. After cultivation, the mycoplasma suspensions are collected separately and inactivated by a suitable method. The mycoplasma suspensions may be treated to fragment the mycoplasmas and the fragments may be purified and concentrated. The vaccine may contain an adjuvant.

2-2. *CHOICE OF VACCINE COMPOSITION*

The vaccine is shown to be satisfactory with respect to safety (*5.2.6*) and efficacy (*5.2.7*) in the target animals. The following tests for safety (section 2-2-1) and immunogenicity (section 2-2-2) may be used during the demonstration of safety and efficacy. If the indications for the vaccine include protection against a drop in laying performance or protection against infectious sinusitis in turkeys, further suitable immunogenicity testing is necessary.

2-2-1. **Safety**. The test is carried out for each route of administration to be recommended for vaccination and for each avian species for which the vaccine is intended. Use a batch of vaccine containing not less than the maximum potency that may be expected in a batch of vaccine.

For each test performed in birds younger than 3 weeks of age, use not fewer than 10 birds not older than the minimum age to be recommended for vaccination. For each test performed

in birds older than 3 weeks of age, use not fewer than 8 birds not older than the minimum age to be recommended for vaccination. In the case of chickens, use chickens from a flock free from specified pathogens (SPF) (*5.2.2*) and in the case of turkeys, use birds that have not been vaccinated and that do not have antibodies against *M. gallisepticum*. Administer by a route and method to be recommended to each bird 1 dose of vaccine. If the schedule to be recommended requires a 2nd dose, administer 1 dose to each bird after an interval of at least 14 days. Observe the birds at least daily for at least 14 days after the last administration of the vaccine.

The test is not valid if more than 10 per cent of the birds younger than 3 weeks of age show abnormal signs of disease or die from causes not attributable to the vaccine. For birds older than 3 weeks of age, the test is not valid if non-specific mortality occurs.

The vaccine complies with the test if no bird shows abnormal signs of disease or dies from causes attributable to the vaccine.

2-2-2. **Immunogenicity**. The test is carried out for each recommended route of administration and for each avian species for which the vaccine is intended. Use for each test not fewer than 40 birds not older than the minimum age to be recommended for vaccination. Use chickens from an SPF flock (*5.2.2*) or turkeys that have not been vaccinated and are free from antibodies against *M. gallisepticum*. For each test, administer to each of not fewer than 20 birds a quantity of the vaccine not greater than a single dose. If re-vaccination is recommended, repeat this operation after the recommended interval. Maintain not fewer than 20 birds as controls. Challenge each bird from both groups not more than 28 days after the last administration by a suitable route with a sufficient quantity of virulent *M. gallisepticum* (R-strain). Observe the birds at least daily for 14 days after challenge. Evaluation is carried out 14 days after challenge, at which point the birds are euthanised. Record the deaths and the number of surviving birds that show clinical signs of disease (e.g. respiratory distress, nasal discharge), and record air sac lesions.

The test is not valid if:

- during the observation period after challenge, fewer than 70 per cent of the controls die or show lesions or clinical signs of disease; and/or
- during the period between vaccination and challenge, more than 10 per cent of the birds from the control group or from the vaccinated group show abnormal clinical signs of disease or die from causes not attributable to the vaccine.

Thoracic and abdominal air sacs are evaluated individually on each side of the animal. The scoring system presented below may be used. The vaccine complies with the test if the score for the vaccinated birds is significantly lower than that for the controls and if the reduction is not less than 30 per cent.

0 no air sac lesions

1 in a limited area of 1 or 2 air sacs: cloudiness with slight thickening of the air sac membrane or flecks of yellowish exudate

2 in 1 air sac or portions of 2 air sacs: greyish or yellow, sometimes foamy exudate, with thickening of the air sac membrane

3 in 3 air sacs: extensive exudate, with clear thickening of most air sacs

4 severe air-sacculitis with considerable exudate and thickening of most air sacs.

2-3. *MANUFACTURER'S TESTS*

2-3-1. **Batch potency test**. It is not necessary to carry out the potency test (section 3-4) for each batch of the vaccine if it has been carried out using a batch of vaccine with a minimum potency. Where the test is not carried out on a batch, an alternative validated method is used, the criteria for acceptance being set with reference to a batch of vaccine that has given satisfactory results in the potency test (section 3-4). The following test may be used.

Use not fewer than 15 chickens, 3-4 weeks old, from an SPF flock (*5.2.2*) or not fewer than 15 turkeys, 3-4 weeks old, that have not been vaccinated against *M. gallisepticum*, do not have antibodies against *M. gallisepticum*, and are obtained from a healthy flock. Collect serum samples from each vaccinate and control bird just before vaccination and check for the absence of antibodies against *M. gallisepticum*. Administer to each of not fewer than 10 birds 1 dose of the vaccine by a recommended route. Maintain not fewer than 5 birds as controls. Collect serum samples 5 weeks after vaccination from each vaccinated and control bird. Measure the titres of serum antibodies against *M. gallisepticum* using a suitable method. Calculate the mean titres for the group of vaccinates. The test is not valid if specific *M. gallisepticum* antibodies are found in any serum samples from the control birds 5 weeks after the time of administration of the vaccine. The vaccine complies with the test if the mean antibody titres of the group of vaccinates are equal to or greater than the titres obtained with a batch that has given satisfactory results in the potency test (section 3-4).

3. BATCH TESTS

3-1. **Identification**. When injected into chickens from an SPF flock (*5.2.2*) or turkeys from healthy flocks, the vaccine stimulates the production of antibodies against one or more strains of *M. gallisepticum*.

3-2. **Bacteria and fungi**. The vaccine, including where applicable the diluent supplied for reconstitution, complies with the test for sterility prescribed in the monograph *Vaccines for veterinary use (0062)*.

3-3. **Residual live mycoplasmas**. A test for residual live mycoplasmas is carried out to confirm inactivation of *M. gallisepticum*. The vaccine complies with a validated test for residual live *M. gallisepticum* carried out by a culture method (see for example *2.6.7*, using media shown to be suitable for *M. gallisepticum*).

3-4. **Potency**. The vaccine complies with the test for immunogenicity (section 2-2-2).

04/2013:1943

MYXOMATOSIS VACCINE (LIVE) FOR RABBITS

Vaccinum myxomatosidis vivum ad cuniculum

1. DEFINITION

Myxomatosis vaccine (live) for rabbits is a preparation of a suitable strain of either myxoma virus that is attenuated for rabbits or Shope fibroma virus. This monograph applies to vaccines intended for the active immunisation of rabbits against myxomatosis.

2. PRODUCTION

2-1. *PREPARATION OF THE VACCINE*

The vaccine virus is grown in cell cultures. The viral suspension is harvested and titrated and may be mixed with a suitable stabilising solution.

2-2. *SUBSTRATE FOR VIRUS PROPAGATION*

2-2-1. **Cell cultures**. The cell cultures comply with the requirements for cell cultures for production of veterinary vaccines (*5.2.4*).

2-3. *CHOICE OF VACCINE VIRUS*

The vaccine virus is shown to be satisfactory with respect to safety (*5.2.6*) and efficacy (*5.2.7*) for the rabbits for which it is intended.

The following tests for safety (section 2-3-1), increase in virulence (section 2-3-2) and immunogenicity (2-3-3) may be used during the demonstration of safety and efficacy.

2-3-1. **Safety**. Carry out the test for each route and method of administration to be recommended for vaccination, using in each case rabbits of the minimum age to be recommended for vaccination. Use vaccine virus at the least attenuated passage level that will be present in a batch of the vaccine.

For each test, use not fewer than 8 rabbits that do not have antibodies against myxoma virus. Administer to each rabbit a quantity of the vaccine virus equivalent to not less than 10 times the maximum virus titre likely to be contained in 1 dose of the vaccine. Observe the rabbits at least daily for 28 days. Record the body temperature the day before vaccination, at vaccination, 4 h after vaccination and then daily for 4 days; note the maximum temperature increase for each rabbit.

The vaccine virus complies with the test if no rabbit shows notable signs of disease or dies from causes attributable to the vaccine virus; the average temperature increase does not exceed 1.0 °C and no rabbit shows a rise greater than 2.0 °C. A local reaction lasting less than 28 days may occur.

2-3-2. **Increase in virulence**. (*This test is performed only for vaccines based on attenuated strains of myxoma virus*). Carry out the test according to general chapter *5.2.6. Evaluation of safety of veterinary vaccines and immunosera*, using rabbits 5-7 weeks old that do not have antibodies against myxoma virus. If the properties of the vaccine virus allow sequential passage through 5 groups via natural spreading, this method may be used, otherwise passage as described below is carried out.

Administer to each rabbit by a route to be recommended a quantity of the vaccine virus that will allow recovery of virus for the passages described below. Administer the virus by the route to be recommended for vaccination most likely to lead to reversion of virulence. Euthanise the rabbits 5-10 days after inoculation and remove from each rabbit organs or tissues with sufficient virus to allow passage; homogenise the organs and tissues in a suitable buffer solution, centrifuge the suspension and use the supernatant for further passages. Inoculate the supernatant into suitable cell culture to verify the presence of virus. Administer by an appropriate route, at a suitable rate, a suitable volume of the supernatant to each rabbit of the next group. Carry out this passage operation not fewer than 4 times; verify the presence of the virus at each passage. If the virus is not found at a passage level, repeat the passage by administration to a group of 10 animals.

If the 5th group of animals shows no evidence of an increase in virulence indicative of reversion during the observation period, further testing is not required. Otherwise, carry out an additional safety test and compare the clinical signs and any relevant parameters in a group of at least 8 animals receiving the material used for the 1st passage and another similar group receiving the virus at the final passage level.

The vaccine virus complies with the test if no indication of increased virulence of the virus recovered for the final passage compared with the material used for the 1st passage is observed. If virus is not recovered after an initial passage in 2 animals and a subsequent repeat passage in 10 animals , the vaccine virus also complies with the test.

2-3-3. **Immunogenicity**. A test is carried out for each route and method of administration to be recommended for vaccination using in each case rabbits of the minimum age to be recommended. The quantity of vaccine virus to be administered to each rabbit is not greater than the minimum virus titre to be stated on the label and the virus is at the most attenuated passage level that will be present in a batch of vaccine.

Use for the test not fewer than 15 rabbits that do not have antibodies against myxoma virus and are reared in suitable isolation conditions to ensure absence of contact with myxoma virus. Administer 1 dose of vaccine to each of not fewer than 10 of the rabbits according to the schedule to be recommended. Maintain not fewer than 5 rabbits as controls. Challenge each rabbit not less than 21 days after the last vaccination by a suitable route with a quantity of a virulent strain of myxoma virus sufficient to cause typical signs of myxomatosis in a rabbit. Observe the rabbits at least daily for a further 21 days after challenge and monitor each of them.

The test is not valid if fewer than 90 per cent of the control rabbits display typical signs of myxomatosis. A vaccine containing myxoma virus complies with the test if, during the observation period after challenge, not fewer than 90 per cent of vaccinated rabbits show no signs of myxomatosis. A vaccine containing Shope fibroma virus complies with the test if, during the observation period after challenge, not fewer than 75 per cent of vaccinated rabbits show no signs of myxomatosis.

3. BATCH TESTS

3-1. **Identification**. Carry out an immunofluorescence test in suitable cell cultures, using a monospecific antiserum.

3-2. **Bacteria and fungi**. The vaccine, including where applicable the diluent supplied for reconstitution, complies with the test for sterility prescribed in the monograph *Vaccines for veterinary use (0062)*.

3-3. **Mycoplasmas** (*2.6.7*). The vaccine complies with the test for mycoplasmas.

3-4. **Specified extraneous agents**. Use not fewer than 2 rabbits that are not older than the minimum age recommended for vaccination, that do not have antibodies against myxoma virus and rabbit haemorrhagic disease virus and that have been reared in suitable isolation conditions to avoid contact with myxoma virus. Administer to each rabbit by a recommended route 10 doses of the vaccine. Observe the rabbits at least daily for 14 days. At the end of the observation period administer by a recommended route to each rabbit a further 10 doses of vaccine. After 14 days take a blood sample from each rabbit and carry out a test for antibodies against rabbit haemorrhagic disease virus. The vaccine complies with the test if no antibodies are found.

3-5. **Virus titre**. Titrate the vaccine virus in suitable cell cultures. The vaccine complies with the test if 1 dose contains not less than the minimum virus titre stated on the label.

3-6. **Potency**. The vaccine complies with the requirements of the test prescribed under Immunogenicity (section 2-3-3.) when administered by a recommended route and method. It is not necessary to carry out the potency test for each batch of the vaccine if it has been carried out on a representative batch using a vaccinating dose containing not more than the minimum virus titre stated on the label.

04/2013:0962

NEONATAL PIGLET COLIBACILLOSIS VACCINE (INACTIVATED)

Vaccinum colibacillosis fetus a partu recentis inactivatum ad suem

1. DEFINITION

Neonatal piglet colibacillosis vaccine (inactivated) is a preparation from cultures of one or more suitable strains of *Escherichia coli*, carrying one or more adhesins or enterotoxins. This monograph applies to vaccines intended

for the active immunisation of sows and gilts for passive protection of their newborn progeny against enteric forms of colibacillosis, administered by injection.

2. PRODUCTION

2-1. *PREPARATION OF THE VACCINE*

The *E. coli* strains used for production are cultured separately in a suitable medium. The cells or toxins are processed to render them safe while maintaining adequate immunogenic properties and are blended. The vaccine may be adjuvanted.

2-2. *CHOICE OF VACCINE COMPOSITION*

The *E. coli* strains used in the production of the vaccine are shown to be satisfactory with respect to expression of antigens and the vaccine is shown to be satisfactory with respect to safety (*5.2.6*) and efficacy (*5.2.7*) for the sows and gilts for which it is intended.

The following tests for expression of antigens (section 2-2-1), safety (section 2-2-2) and immunogenicity (section 2-2-3) may be used during the demonstration of safety and efficacy.

2-2-1. **Expression of antigens**. The expression of antigens that stimulate a protective immune response is verified by a suitable immunochemical method (*2.7.1*) carried out on the antigen obtained from each of the vaccine strains under the conditions used for the production of the vaccine.

2-2-2. **Safety**

2-2-2-1. *Safety in pregnant sows*. Carry out the test for each route and method of administration to be recommended for vaccination and in pregnant sows. Use a batch of vaccine containing not less than the maximum potency that may be expected in a batch of vaccine.

For each test, use not fewer than 8 pregnant sows per group that have not been vaccinated against colibacillosis, at the relevant stages of pregnancy in accordance with the schedule to be recommended or at different stages of pregnancy. Administer to each sow 1 dose of the vaccine. If the schedule to be recommended requires a 2nd dose, administer another dose after an interval of at least 14 days. Observe the sows at least daily until farrowing. Record body temperature the day before vaccination, at vaccination, 2 h, 4 h and 6 h later and then daily for 4 days; note the maximum temperature increase for each sow.

The vaccine complies with the test if:

- no sow shows abnormal local or systemic reactions or dies from causes attributable to the vaccine;
- the average temperature increase for all sows does not exceed 1.5 °C and no sow shows a rise greater than 2.0 °C; and
- no adverse effects on gestation or the offspring are noted.

2-2-2-2. *Field studies*. The pigs used for field trials are also used to evaluate safety. Use not fewer than 3 groups each of not fewer than 20 pigs with corresponding groups of not fewer than 10 controls. Examine the injection site for local reactions after vaccination. Record body temperature the day before vaccination, at vaccination, at the time interval after which a rise in temperature, if any, was seen in test 2-2-2-1, and daily during the 2 days following vaccination; note the maximum temperature increase for each pig.

The vaccine complies with the test if no pig shows abnormal local or systemic reactions or dies from causes attributable to the vaccine, the average temperature increase for all pigs does not exceed 1.5 °C, and no pig shows a rise greater than 2.0 °C.

2-2-3. **Immunogenicity**. Carry out the test with a challenge strain representing each type of antigen against which the vaccine is intended to protect: if a single strain with all the necessary antigens is not available, repeat the test using different challenge strains.

Each test is carried out for each route and method of administration to be recommended for vaccination. The vaccine administered to each gilt is of minimum potency.

Use not fewer than 8 gilts susceptible to *E. coli* infections and that do not have antibodies against the antigens to be stated on the label. Take not fewer than 4 at random and vaccinate these at the stage of pregnancy and according to the schedule to be recommended. Maintain not fewer than 4 gilts as controls. Within 12 h of their giving birth, take not fewer than 15 healthy piglets from the vaccinated gilts and 15 healthy piglets from the controls, taking at least 3 from each litter. Challenge each piglet by the oral route with a sufficient quantity of a virulent strain of *E. coli* before or after colostrum feeding and using the same conditions for vaccinated piglets and controls. The strain used must not be one used in the manufacture of the vaccine. Return the piglets to their dam and observe at least daily for 8 days.

On each day, note signs in each piglet and score using the following scale.

0 no signs

1 slight diarrhoea

2 marked diarrhoea (watery faeces)

3 dead

Calculate total scores for each piglet over 8 days.

The test is not valid if fewer than 40 per cent of the piglets from the control gilts die and more than 15 per cent of the piglets from the control gilts show no signs of illness. The vaccine complies with the test if there is a significant reduction in score in the group of piglets from the vaccinated gilts compared with the group from the unvaccinated controls.

For some adhesins (for example, F5 and F41), there is published evidence that high mortality cannot be achieved under experimental conditions. If challenge has to be carried out with a strain having such adhesins: the test is not valid if fewer than 70 per cent of the control piglets show signs expected with the challenge strain; the vaccine complies with the test if there is a significant reduction in score in the group of piglets from the vaccinated gilts compared with the group from the unvaccinated controls.

2-3. *MANUFACTURER'S TESTS*

2-3-1. **Batch potency test**. It is not necessary to carry out the potency test (section 3-3) for each batch of vaccine if it has been carried out using a batch of vaccine with a minimum potency. Where the test is not carried out, an alternative validated method is used, the criteria for acceptance being set with reference to a batch of vaccine that has given satisfactory results in the test described under Potency. The following test may be used.

Use 7 pigs not less than 3 weeks old and that do not have antibodies against the antigens stated on the label. Vaccinate each of 5 pigs by the recommended route and according to the recommended schedule. Maintain 2 pigs as controls. Alternatively, if the nature of the antigens allows reproducible results to be obtained, a test in laboratory animals (for example, guinea-pigs, mice, rabbits or rats) may be carried out. To obtain a valid assay, it may be necessary to carry out a test using several groups of animals, each receiving a different dose. For each dose, carry out the test as follows. Vaccinate not fewer than 5 animals with a single injection of a suitable dose. Maintain not fewer than 2 animals as controls. Where the recommended schedule requires a booster injection to be given, a booster vaccination may also be given in this test provided it has been demonstrated that this will still provide a suitably sensitive test system. At a given interval within the range of 14-21 days after the last injection, collect blood from each animal and prepare serum samples. Use a suitable validated test such as an enzyme-linked immunosorbent assay (*2.7.1*) to measure the antibody response to each of the antigens stated on the label. The vaccine complies with the test if the antibody levels in the vaccinates are not significantly less than those obtained with a batch that has given satisfactory

results in the test described under Potency and there is no significant increase in antibody titre in the controls.

Where animals that do not have antibodies against the antigens stated on the label are not available, seropositive animals may be used in the above test. During the development of a test with seropositive animals, particular care will be required during the validation of the test system to establish that the test is suitably sensitive and to specify acceptable pass, fail and retest criteria. It will be necessary to take into account the range of possible prevaccination titres and establish the acceptable minimum titre rise after vaccination in relation to these.

2-3-2. **Bacterial endotoxins**. A test for bacterial endotoxins (*2.6.14*) is carried out on the final lot or, where the nature of the adjuvant prevents performance of a satisfactory test, on the bulk antigen or the mixture of bulk antigens immediately before addition of the adjuvant. The maximum acceptable amount of bacterial endotoxins is that found for a batch of vaccine that has been shown satisfactory in safety test 2-2-2-1 given under Choice of vaccine composition. The method chosen for determining the amount of bacterial endotoxin present in the vaccine batch used in the safety test for determining the maximum acceptable level of endotoxin is used subsequently for testing of each batch.

3. BATCH TESTS

3-1. **Identification**. In animals that do not have antibodies against the antigens stated on the label, the vaccine stimulates the production of such antibodies.

3-2. **Bacteria and fungi**. The vaccine, including where applicable the diluent supplied for reconstitution, complies with the test for sterility prescribed in the monograph *Vaccines for veterinary use (0062)*.

3-3. **Potency**. The vaccine complies with the requirements of the test mentioned under Immunogenicity (section 2-2-3) when administered by a recommended route and method.

04/2013:0961

NEONATAL RUMINANT COLIBACILLOSIS VACCINE (INACTIVATED)

Vaccinum colibacillosis fetus a partu recentis inactivatum ad ruminantes

1. DEFINITION

Neonatal ruminant colibacillosis vaccine (inactivated) is a preparation from cultures of one or more suitable strains of *Escherichia coli*, carrying one or more adhesin factors or enterotoxins. This monograph applies to vaccines intended for the active immunisation of dams for passive protection of their newborn progeny against enteric forms of colibacillosis, administered by injection.

2. PRODUCTION

2-1. *PREPARATION OF THE VACCINE*

The *E. coli* strains used for production are cultured separately in a suitable medium. The cells or toxins are processed to render them safe while maintaining adequate immunogenic properties and are blended. The vaccine may be adjuvanted.

2-2. *CHOICE OF VACCINE COMPOSITION*

The *E. coli* strains used in the production of the vaccine are shown to be satisfactory with respect to expression of antigens and the vaccine is shown to be satisfactory with respect to safety (*5.2.6*) and efficacy (*5.2.7*) for the ruminants for which it is intended.

The following tests for expression of antigens (section 2-2-1), safety (section 2-2-2) and immunogenicity (section 2-2-3) may be used during the demonstration of safety and efficacy.

2-2-1. **Expression of antigens**. The expression of antigens that stimulate a protective immune response is verified by a suitable immunochemical method (*2.7.1*) carried out on the antigen obtained from each of the vaccine strains under the conditions used for the production of the vaccine.

2-2-2. **Safety**

2-2-2-1. *Safety in pregnant animals*. Carry out the test for each route and method of administration to be recommended for vaccination and in pregnant animals of each species for which the vaccine is intended. Use a batch of vaccine containing not less than the maximum potency that may be expected in a batch of vaccine.

For each test, use not fewer than 8 pregnant animals per group that have not been vaccinated against colibacillosis. Administer to each animal 1 dose of the vaccine. If the schedule to be recommended requires a 2nd dose, administer another dose after an interval of at least 14 days. Observe the animals at least daily until parturition. Record body temperature the day before vaccination, at vaccination, 2 h, 4 h and 6 h later and then daily for 4 days; note the maximum temperature increase for each animal.

The vaccine complies with the test if:

- no animal shows abnormal local or systemic reactions or dies from causes attributable to the vaccine;
- the average temperature increase for all animals does not exceed 1.5 °C and no animal shows a rise greater than 2.0 °C; and
- no adverse effects on gestation or the offspring are noted.

2-2-2-2. *Field studies*. Safety is demonstrated in field trials for each species for which the vaccine is intended. Administer the dose to be recommended to not fewer than 60 animals from 3 different stocks by the route and according to the schedule to be recommended. Assign not fewer than 30 animals from the same stocks to control groups. Observe the animals at least daily for 14 days after the last administration.

The vaccine complies with the test if no animal shows abnormal local or systemic reactions or dies from causes attributable to the vaccine and if no rise in temperature of more than 1.5 °C occurs within 2 days of administration of each dose of the vaccine.

2-2-3. **Immunogenicity**. Carry out the test with a challenge strain representing each type of antigen against which the vaccine is intended to protect: if a single strain with all the necessary antigens is not available, repeat the test using different challenge strains. Each test is carried out for each route and method of administration to be recommended for vaccination, using in each case animals of each species for which the vaccine is intended. The vaccine administered to each animal is of minimum potency.

For each test, use not fewer than 15 animals that do not have antibodies against the antigens to be stated on the label. Take not fewer than 10 at random and vaccinate these at the stage of pregnancy and according to the schedule to be recommended. Maintain not fewer than 5 animals as controls. Collect colostrum from all animals after parturition and store the samples individually in conditions that maintain antibody levels. Take not fewer than 15 newborn unsuckled animals and house them in an environment ensuring absence of enteric pathogens. Allocate a colostrum sample from not fewer than 10 vaccinated dams and not fewer than 5 controls to the offspring. After birth, feed the animals with the colostrum sample allocated to it. After feeding the colostrum and within 12 h of birth, challenge all the animals by the oral route with a sufficient quantity of a virulent strain of *E. coli* and observe at least daily for 10 days. The strain must not be one used in the manufacture of the vaccine.

On each day, note daily signs in each animal and score using the following scale.

0 no signs

1 slight diarrhoea

2 marked diarrhoea (watery faeces)

3 dead

Calculate total scores for each animal over 10 days.

The test is not valid if fewer than 80 per cent of the animals given colostrum from the controls die or show severe signs of disease. The vaccine complies with the test if there is a significant reduction in score in the group of animals given colostrum from vaccinated dams compared with the group given colostrum from the unvaccinated controls.

2-3. *MANUFACTURER'S TESTS*

2-3-1. **Batch potency test**. It is not necessary to carry out the potency test (section 3-3) for each batch of vaccine if it has been carried out using a batch of vaccine with a minimum potency. Where the test is not carried out, an alternative validated method is used, the criteria for acceptance being set with reference to a batch of vaccine that has given satisfactory results in the test described under Potency. The following test may be used.

To obtain a valid assay, it may be necessary to carry out a test using several groups of animals, each receiving a different dose. For each dose required, carry out the test as follows. Use not fewer than 7 animals (for example rabbits, guinea-pigs, rats or mice) that do not have antibodies against the antigens stated on the label. Vaccinate not fewer than 5 animals, using 1 injection of a suitable dose. Maintain 2 animals as controls. Where the recommended schedule requires a booster injection to be given, a booster vaccination may also be given in this test provided it has been demonstrated that this will still provide a suitably sensitive test system. At a given interval within the range of 14-21 days after the last injection, collect blood from each animal and prepare serum samples. Use a suitable validated test such as an enzyme-linked immunosorbent assay (*2.7.1*) to measure the antibody response to each of the protective antigens stated on the label. The vaccine complies with the test if the antibody levels in the vaccinates are not significantly less than those obtained with a batch that has given satisfactory results in the test described under Potency and there is no significant increase in antibody titre in the controls.

Where animals that do not have antibodies against the antigens stated on the label are not available, seropositive animals may be used in the above test. During the development of a test with seropositive animals, particular care will be required during the validation of the test system to establish that the test is suitably sensitive and to specify acceptable pass, fail and retest criteria. It will be necessary to take into account the range of possible prevaccination titres and establish the acceptable minimum titre rise after vaccination in relation to these.

2-3-2. **Bacterial endotoxins**. A test for bacterial endotoxins (*2.6.14*) is carried out on the final lot or, where the nature of the adjuvant prevents performance of a satisfactory test, on the bulk antigen or the mixture of bulk antigens immediately before addition of the adjuvant. The maximum acceptable amount of bacterial endotoxins is that found for a batch of vaccine that has been shown satisfactory in safety test 2-2-2-1 given under Choice of vaccine composition. The method chosen for determining the amount of bacterial endotoxin present in the vaccine batch used in the safety test for determining the maximum acceptable level of endotoxins is used subsequently for testing of each batch.

3. BATCH TESTS

3-1. **Identification**. In animals that do not have antibodies against the antigens stated on the label, the vaccine stimulates the production of such antibodies.

3-2. **Bacteria and fungi**. The vaccine, including where applicable the diluent supplied for reconstitution, complies with the test for sterility prescribed in the monograph *Vaccines for veterinary use (0062)*.

3-3. **Potency**. The vaccine complies with the requirements of the test mentioned under Immunogenicity (section 2-2-3) when administered by a recommended route and method.

04/2013:0870

NEWCASTLE DISEASE VACCINE (INACTIVATED)

Vaccinum pseudopestis aviariae inactivatum

1. DEFINITION

Newcastle disease vaccine (inactivated) (also known as avian paramyxovirus 1 vaccine (inactivated) for vaccines intended for some species) is a preparation of a suitable strain of Newcastle disease virus (avian paramyxovirus 1), inactivated while maintaining adequate immunogenic properties.
This monograph applies to vaccines intended for active immunisation of birds against Newcastle disease.

2. PRODUCTION

2-1. *PREPARATION OF THE VACCINE*

The vaccine virus is grown in embryonated hens' eggs or in cell cultures. The virus harvest is inactivated. The vaccine may be adjuvanted.

2-2. *SUBSTRATE FOR VIRUS PROPAGATION*

2-2-1. **Embryonated hens' eggs**. If the vaccine virus is grown in embryonated hens' eggs, they are obtained from healthy flocks.

2-2-2. **Cell cultures**. If the vaccine virus is grown in cell cultures, they comply with the requirements for cell cultures for production of veterinary vaccines (*5.2.4*).

2-3. *SEED LOTS*

2-3-1. **Extraneous agents**. The master seed lot complies with the test for extraneous agents in seed lots (*2.6.24*). In these tests on the master seed lot, the organisms used are not more than 5 passages from the master seed lot at the start of the test.

2-4. *CHOICE OF VACCINE COMPOSITION*

The vaccine is shown to be satisfactory with respect to safety (*5.2.6*) and efficacy (*5.2.7*) for each species and category of birds for which it is intended.
The following tests for safety (section 2-4-1) and immunogenicity (section 2-4-2) may be used during the demonstration of safety and efficacy.

2-4-1. **Safety**. The test is carried out for each route of administration to be recommended for vaccination and for each avian species for which the vaccine is intended. Use a batch of vaccine containing not less than the maximum potency that may be expected in a batch of vaccine.

For each test performed in birds younger than 3 weeks of age, use not fewer than 10 birds not older than the minimum age to be recommended for vaccination. For each test performed in birds older than 3 weeks of age, use not fewer than 8 birds not older than the minimum age to be recommended for vaccination. In the case of chickens, use chickens from a flock free from specified pathogens (SPF) (*5.2.2*) and if the vaccine is used for species other than chickens, they have not been vaccinated and do not have antibodies against Newcastle disease virus. Administer by a route and method to be recommended to each bird 1 dose of vaccine. Observe

Vaccines

the birds at least daily for at least 14 days after the last administration of the vaccine.

The test is not valid if more than 10 per cent of the birds younger than 3 weeks of age show abnormal signs of disease or die from causes not attributable to the vaccine. For birds older than 3 weeks of age, the test is not valid if non-specific mortality occurs.

The vaccine complies with the test if no bird shows abnormal signs of disease or dies from causes attributable to the vaccine.

2-4-2. **Immunogenicity**. A test is carried out for each route and method of administration to be recommended; the vaccine administered to each bird is of minimum potency.

For chickens, the test for vaccines for use in chickens (section 2-4-2-1) is suitable for demonstrating immunogenicity. For other species of birds (for example, pigeons or turkeys), the test for vaccines for use in species other than the chicken (section 2-4-2-2) is suitable for demonstrating immunogenicity.

2-4-2-1. *Vaccines for use in chickens*. Use not fewer than 70 chickens, 21-28 days old, of the same origin and from an SPF flock (*5.2.2*). For vaccination, use not fewer than 3 groups, each of not fewer than 20 chickens. Choose a number of different volumes of the vaccine corresponding to the number of groups: for example, volumes equivalent to 1/25, 1/50 and 1/100 of a dose. Allocate a different volume to each vaccination group. Vaccinate each chicken by the intramuscular route with the volume of vaccine allocated to its group. Maintain not fewer than 10 chickens as controls. Challenge each chicken after 17-21 days by the intramuscular route with 6 $\log_{10}$ embryo LD_{50} of the Herts (Weybridge 33/56) strain of avian paramyxovirus 1. Observe the chickens at least daily for 21 days after challenge. At the end of the observation period, calculate the PD_{50} by standard statistical methods from the number of chickens that survive in each vaccinated group without showing any signs of Newcastle disease during the 21 days.

The test is invalid unless all the control birds die within 6 days of challenge.

The vaccine complies with the test if the smallest dose stated on the label corresponds to not less than 50 PD_{50} and the lower confidence limit is not less than 35 PD_{50} per dose. If the lower confidence limit is less than 35 PD_{50} per dose, repeat the test; the vaccine must be shown to contain not less than 50 PD_{50} in the repeat test.

2-4-2-2. *Vaccines for use in species other than the chicken*. Use not fewer than 30 birds of the target species, of the same origin and of the same age, that do not have antibodies against avian paramyxovirus 1. Vaccinate in accordance with the recommendations for use not fewer than 20 birds. Maintain not fewer than 10 birds as controls. Challenge each bird after 4 weeks by the intramuscular route with a sufficient quantity of virulent avian paramyxovirus 1.

The test is not valid if serum samples obtained at the time of the first vaccination show the presence of antibodies against avian paramyxovirus 1 in either vaccinates or controls, or if tests carried out at the time of challenge show such antibodies in controls.

The test is not valid if fewer than 70 per cent of the control birds die or show serious signs of Newcastle disease.

The vaccine complies with the test if not fewer than 90 per cent of the vaccinated birds survive and show no serious signs of avian paramyxovirus 1 infection.

2-5. *MANUFACTURER'S TESTS*

2-5-1. **Residual live virus**. The test is carried out in embryonated eggs or suitable cell cultures (*5.2.4*), whichever is the most sensitive for the vaccine strain. The quantity of inactivated virus harvest used in the test is equivalent to not less than 10 doses of vaccine. The vaccine complies with the test if no live virus is detected.

2-5-2. **Batch potency test**. It is not necessary to carry out the potency test (section 3-5) for each batch of vaccine if it has been carried out using a batch of vaccine with a minimum potency. Where the test is not carried out, an alternative validated method is used, the criteria for acceptance being set with reference to a batch of vaccine that has given satisfactory results in the test described under Potency. The following tests may be used. Wherever possible, carry out the test for antigen content (section 2-5-2-1) together with the test for adjuvant (section 2-5-2-2).

Vaccines for use in chickens. The test for antigen content (section 2-5-2-1) together with the test for adjuvant (section 2-5-2-2) may be carried out; if the nature of the product does not allow valid results to be obtained with these tests, or if the vaccine does not comply, the test for serological assay (section 2-5-2-3) may be carried out. If the vaccine does not comply with the latter test, the test for vaccines for use in chickens (section 2-4-2-1) may be carried out. A test using fewer than 20 birds per group and a shorter observation period after challenge may be used if this has been shown to give a valid potency test.

Vaccines for use in species other than the chicken. Carry out a suitable test for which a satisfactory correlation has been established with the test for vaccines for use in species other than the chicken (section 2-4-2-2), the criteria for acceptance being set with reference to a batch that has given satisfactory results in the latter test. A test in chickens from an SPF flock (*5.2.2*) consisting of a measure of the serological response to graded amounts of vaccine (for example, 1/25, 1/50 and 1/100 of a dose with serum sampling 17-21 days later) may be used. Alternatively, the test for antigen content (section 2-5-2-1) together with the test for adjuvant (section 2-5-2-2) may be conducted if shown to provide a valid potency test.

2-5-2-1. *Antigen content*. The relative antigen content is determined by comparing the content of haemagglutinin-neuraminidase antigen per dose of vaccine with a haemagglutinin-neuraminidase antigen reference preparation, by enzyme-linked immunosorbent assay (*2.7.1*). For this comparison, *Newcastle disease virus reference antigen BRP*, *Newcastle disease virus control antigen BRP*, *Newcastle disease virus coating antibody BRP* and *Newcastle disease virus conjugated detection antibody BRP* are suitable. Before estimation, the antigen may be extracted from the emulsion using *isopropyl myristate R* or another suitable method. The vaccine complies with the test if the estimated antigen content is not significantly lower than that of a batch that has been found to be satisfactory with respect to immunogenicity (section 2-4-2).

2-5-2-2. *Adjuvant*. If the immunochemical assay (section 2-5-2-1) is performed and if the vaccine is adjuvanted, the adjuvant is tested by suitable physical and chemical methods. For oil-adjuvanted vaccines, the adjuvant is tested in accordance with the monograph *Vaccines for veterinary use (0062)*. If the adjuvant cannot be adequately characterised, the antigen content determination cannot be used as the batch potency test.

2-5-2-3. *Serological assay*. Use not fewer than 15 chickens, 21-28 days old, of the same origin and from an SPF flock (*5.2.2*). Vaccinate by the intramuscular route not fewer than 10 chickens with a volume of the vaccine equivalent to 1/50 of a dose. Maintain not fewer than 5 chickens as controls. Collect serum samples from each chicken after 17-21 days. Measure the antibody levels in the sera by the haemagglutination-inhibition (HI) test using the technique described below or an equivalent technique with the same numbers of haemagglutinating units and red blood cells. The test system used must include negative and positive control sera, the latter having an HI titre of 5.0 $\log_2$ to 6.0 $\log_2$. The vaccine complies with the test if the mean HI titre of the vaccinated group is equal to or greater than 4.0 $\log_2$ and that

of the unvaccinated group is 2.0 $\log_2$ or less. If the HI titres are not satisfactory, carry out the test for vaccines for use in chickens (section 2-4-2-1).

Haemagglutination inhibition. Inactivate the test sera by heating at 56 °C for 30 min. Add 25 µL of inactivated serum to the first row of wells in a microtitre plate. Add 25 µL of a buffered 9 g/L solution of *sodium chloride R* at pH 7.2-7.4 to the rest of the wells. Prepare twofold dilutions of the sera across the plate. To each well add 25 µL of a suspension containing 4 haemagglutinating units of inactivated Newcastle disease virus. Incubate the plate at 4 °C for 1 h. Add 25 µL of a 1 per cent *V/V* suspension of red blood cells collected from chickens that are 3-4 weeks old and free from antibodies against Newcastle disease virus. Incubate the plate at 4 °C for 1 h. The HI titre is equal to the highest dilution that produces complete inhibition.

3. BATCH TESTS

3-1. **Identification**. When injected into animals that do not have antibodies against Newcastle disease virus, the vaccine stimulates the production of such antibodies.

3-2. **Bacteria and fungi**. The vaccine, including where applicable the diluent supplied for reconstitution, complies with the test for sterility prescribed in the monograph *Vaccines for veterinary use (0062)*.

3-3. **Specified extraneous agents**. Use 10 chickens, 14-28 days old, from an SPF flock (*5.2.2*). Vaccinate each chicken by a recommended route with a double dose of the vaccine. After 3 weeks, administer 1 dose by the same route. Collect serum samples from each chicken 2 weeks later and carry out tests for antibodies to the following agents by the methods prescribed in general chapter *5.2.2. Chicken flocks free from specified pathogens for the production and quality control of vaccines*: avian encephalomyelitis virus, avian infectious bronchitis virus, avian leucosis viruses, egg-drop syndrome virus, avian infectious bursal disease virus, avian infectious laryngotracheitis virus, influenza A virus, Marek's disease virus.

The vaccine complies with the test if it does not stimulate the formation of antibodies against these agents.

3-4. **Residual live virus**. A test for residual live virus is carried out to confirm inactivation of Newcastle disease virus.

Inject 2/5 of a dose into the allantoic cavity of each of 10 embryonated hen eggs that are 9-11 days old and from SPF flocks (*5.2.2*) (SPF eggs), and incubate. Observe for 6 days and pool separately the allantoic fluid from eggs containing live embryos and that from eggs containing dead embryos, excluding those dying within 24 h of the injection. Examine embryos that die within 24 h of injection for the presence of Newcastle disease virus: the vaccine does not comply with the test if Newcastle disease virus is found.

Inject into the allantoic cavity of each of 10 SPF eggs, 9-11 days old, 0.2 mL of the pooled allantoic fluid from the live embryos and, into each of 10 similar eggs, 0.2 mL of the pooled fluid from the dead embryos and incubate for 5-6 days. Test the allantoic fluid from each egg for the presence of haemagglutinins using chicken erythrocytes.

The vaccine complies with the test if there is no evidence of haemagglutinating activity and if not more than 20 per cent of the embryos die at either stage. If more than 20 per cent of the embryos die at one of the stages, repeat that stage; the vaccine complies with the test if there is no evidence of haemagglutinating activity and not more than 20 per cent of the embryos die at that stage.

Antibiotics may be used in the test to control extraneous bacterial infection.

3-5. **Potency**. The vaccine complies with the requirements of the test mentioned under Immunogenicity (section 2-4-2) when administered by a recommended route and method.

04/2013:0450

NEWCASTLE DISEASE VACCINE (LIVE)

Vaccinum pseudopestis aviariae vivum

1. DEFINITION

Newcastle disease vaccine (live) is a preparation of a suitable strain of Newcastle disease virus (avian paramyxovirus 1). This monograph applies to vaccines intended for administration to chickens and/or other avian species for active immunisation.

2. PRODUCTION

2-1. *PREPARATION OF THE VACCINE*

The vaccine virus is grown in embryonated hens' eggs or in cell cultures.

2-2. *SUBSTRATE FOR VIRUS PROPAGATION*

2-2-1. **Embryonated hens' eggs**. If the vaccine virus is grown in embryonated hens' eggs, they are obtained from flocks free from specified pathogens (SPF) (*5.2.2*).

2-2-2. **Cell cultures**. If the vaccine virus is grown in cell cultures, they comply with the requirements for cell cultures for production of veterinary vaccines (*5.2.4*).

2-3. *SEED LOTS*

2-3-1. **Extraneous agents**. The master seed lot complies with the tests for extraneous agents in seed lots (*2.6.24*). In these tests on the master seed lot, the organisms used are not more than 5 passages from the master seed lot at the start of the tests.

2-4. *CHOICE OF VACCINE VIRUS*

The vaccine virus shall be shown to be satisfactory with respect to safety (*5.2.6*) and efficacy (*5.2.7*) for the birds for which it is intended.

The following tests for intracerebral pathogenicity index (section 2-4-1), amino-acid sequence (section 2-4-2), safety (section 2-4-3), increase in virulence (section 2-4-4) and immunogenicity (section 2-4-5) may be used during the demonstration of safety and efficacy.

2-4-1. **Intracerebral pathogenicity index**. Use vaccine virus at the least attenuated passage level that will be present between the master seed lot and a batch of the vaccine. Inoculate the vaccine virus into the allantoic cavity of embryonated hens' eggs, 9- to 11- days-old, from an SPF flock (*5.2.2*). Incubate the inoculated eggs for a suitable period and harvest and pool the allantoic fluids. Use not fewer than ten 1-day-old chickens (i.e. more than 24 h but less than 40 h after hatching), from an SPF flock (*5.2.2*). Administer by the intracerebral route to each chick 0.05 mL of the pooled allantoic fluids containing not less than $10^{8.0}$ EID_{50} or, if this virus quantity cannot be achieved, not less than $10^{7.0}$ EID_{50}. Observe the chickens at least daily for 8 days after administration and score them once every 24 h. A score of 0 is attributed to a chicken if it is clinically normal, 1 if it shows clinical signs of disease and 2 if it is dead. The intracerebral pathogenicity index is the mean of the scores per chicken per observation over the 8-day period.

If an inoculum of not less than $10^{8.0}$ EID_{50} is used, the vaccine virus complies with the test if its intracerebral pathogenicity index is not greater than 0.5; if an inoculum of not less than $10^{7.0}$ EID_{50} but less than $10^{8.0}$ EID_{50} is used, the vaccine virus complies with the test if its intracerebral pathogenicity index is not greater than 0.4.

Vaccines

2-4-2. **Amino-acid sequence**. Determine the sequence of a fragment of RNA from the vaccine virus containing the region encoding for the F0 cleavage site by a suitable method. The encoded amino-acid sequence is shown to be one of the following:

		F2						Cleavage site	F1		
Site		111	112	113	114	115	116	∨	117	118	119
		Gly	Gly	Lys	Gln	Gly	Arg		Leu	Ile	Gly
	or	Gly	Gly	Arg	Gln	Gly	Arg		Leu	Ile	Gly
	or	Gly	Glu	Arg	Gln	Glu	Arg		Leu	Val	Gly

or equivalent with leucine at 117 and no basic amino acids at sites 111, 112, 114 and 115.

2-4-3. **Safety**. Carry out the test for each route and method of administration to be recommended for vaccination and in each avian species for which the vaccine is intended, using in each case birds not older than the minimum age to be recommended for vaccination. If the test is performed in chickens, use chickens from an SPF flock (*5.2.2*). If the test is performed in birds other than chickens, use birds that do not have antibodies against Newcastle disease virus. Use vaccine virus at the least attenuated passage level that will be present in a batch of the vaccine.

For each test performed in birds younger than 3 weeks of age, use not fewer than 10 birds. For each test performed in birds older than 3 weeks of age, use not fewer than 8 birds. Administer to each bird a quantity of the vaccine virus equivalent to not less than 10 times the maximum virus titre likely to be contained in 1 dose of the vaccine. Observe the birds at least daily for at least 14 days.

The test is not valid if more than 10 per cent of the birds younger than 3 weeks of age show abnormal signs of disease or die from causes not attributable to the vaccine virus. For birds older than 3 weeks of age, the test is not valid if non-specific mortality occurs.

The vaccine virus complies with the test if no bird shows abnormal signs of disease or dies from causes attributable to the vaccine.

2-4-4. **Increase in virulence**. Carry out the test according to general chapter *5.2.6* using birds not more than 2 weeks old. If the properties of the vaccine virus allow sequential passage through 5 groups via natural spreading, this method may be used, otherwise passage as described below is carried out. Carry out the test in a target species, using the chicken if it is one of the target species. For the test in chickens, use chickens from an SPF flock (*5.2.2*). For other species, carry out the test in birds that do not have antibodies against Newcastle disease virus. Administer to each bird of the 1st group by eye-drop a quantity of the vaccine virus that will allow recovery of virus for the passages described below. Observe the birds for the period shown to correspond to maximum replication of the vaccine virus, euthanise them and prepare a suspension from the brain of each bird and from a suitable organ depending on the tropism of the strain (for example, mucosa of the entire trachea, intestine, pancreas); pool the samples. Administer 0.05 mL of the pooled samples by eye-drop to each bird of the next group. Carry out this passage operation not fewer than 4 times; verify the presence of the virus at each passage. If the virus is not found at a passage level, repeat the passage by administration to a group of 10 birds.

A. Carry out the test for intracerebral pathogenicity index (section 2-4-1) using the material used for the 1st passage and the virus at the final passage level.

B. Carry out the test for amino-acid sequence (section 2-4-2) using unpassaged vaccine virus the material used for the 1st passage and the virus at the final passage level.

C. Carry out the test for safety (section 2-4-3) using the material used for the 1st passage and the virus at the final passage level.

Administer the virus by the route to be recommended for vaccination likely to be the least safe and to the avian species for which the vaccine is intended that is likely to be the most susceptible to Newcastle disease.

The vaccine virus complies with the test if, in the tests 2-4-4A, 2-4-4B and 2-4-4C, no indication of increase in virulence of the virus recovered for the final passage compared with the material used for the 1st passage is observed. If virus is not recovered after an initial passage in 5 birds and a subsequent repeat passage in 10 birds, the vaccine virus also complies with the test.

2-4-5. **Immunogenicity**. For each avian species for which the vaccine is intended, a test is carried out for each route and method of administration to be recommended using in each case birds not older than the minimum age to be recommended for vaccination. The quantity of the vaccine virus administered to each bird is not greater than the minimum titre to be stated on the label and the virus is at the most attenuated passage level that will be present in a batch of the vaccine.

2-4-5-1. *Vaccines for use in chickens*. Use not fewer than 30 chickens of the same origin and from an SPF flock (*5.2.2*). Vaccinate by a route to be recommended not fewer than 20 chickens. Maintain not fewer than 10 chickens as controls. Challenge each chicken after 21 days by the intramuscular route with not less than $10^{5.0}$ embryo LD_{50} of the Herts (Weybridge 33/56) strain of Newcastle disease virus. Observe the chickens at least daily for 14 days after challenge. Record the deaths and the number of surviving chickens that show clinical signs of disease.

The test is not valid if 6 days after challenge fewer than 100 per cent of the control chickens have died or if during the period between vaccination and challenge more than 10 per cent of the vaccinated or control chickens show abnormal clinical signs or die from causes not attributable to the vaccine.

The vaccine virus complies with the test if during the observation period after challenge not fewer than 90 per cent of the vaccinated chickens survive and show no notable clinical signs of Newcastle disease.

2-4-5-2. *Vaccines for use in avian species other than the chicken*. Use not fewer than 30 birds of the species for which the vaccine is intended for Newcastle disease, of the same origin and that do not have antibodies against avian paramyxovirus 1. Vaccinate by a route to be recommended not fewer than 20 birds. Maintain not fewer than 10 birds as controls. Challenge each bird after 21 days by the intramuscular route with a sufficient quantity of virulent avian paramyxovirus 1. Observe the birds at least daily for 21 days after challenge. Record the deaths and the surviving birds that show clinical signs of disease.

The test is not valid if:

- during the observation period after challenge fewer than 90 per cent of the control birds die or show severe clinical signs of Newcastle disease;
- or if during the period between the vaccination and challenge more than 10 per cent of the vaccinated or control birds show abnormal clinical signs or die from causes not attributable to the vaccine.

The vaccine virus complies with the test if during the observation period after challenge not fewer than 90 per cent of the vaccinated birds survive and show no notable clinical signs of Newcastle disease. For species where there is published evidence that it is not possible to achieve this level of protection, the vaccine complies with the test if there is a significant reduction in morbidity and mortality of the vaccinated birds compared with the control birds.

3. BATCH TESTS

3-1. **Identification**

3-1-1. *Identification of the vaccine virus*. The vaccine, diluted if necessary and mixed with a monospecific Newcastle disease virus antiserum, no longer provokes haemagglutination of chicken red blood cells or infects embryonated hens' eggs from an SPF flock (*5.2.2*) or susceptible cell cultures (*5.2.4*) into which it is inoculated.

3-1-2. *Identification of the virus strain*. The strain of vaccine virus is identified by a suitable method, for example using monoclonal antibodies.

3-2. **Bacteria and fungi**. Vaccines intended for administration by injection comply with the test for sterility prescribed in the monograph *Vaccines for veterinary use (0062)*.

Frozen or freeze-dried vaccines produced in embryonated eggs and not intended for administration by injection either comply with the test for sterility prescribed in the monograph *Vaccines for veterinary use (0062)* or with the following test: carry out a quantitative test for bacterial and fungal contamination; carry out identification tests for microorganisms detected in the vaccine; the vaccine does not contain pathogenic microorganisms and contains not more than 1 non-pathogenic microorganism per dose.

Any diluent supplied for reconstitution of the vaccine complies with the test for sterility prescribed in the monograph *Vaccines for veterinary use (0062)*.

3-3. **Mycoplasmas**. The vaccine complies with the test for mycoplasmas (*2.6.7*).

3-4. **Extraneous agents**. The vaccine complies with the tests for extraneous agents in batches of finished product (*2.6.25*).

3-5. **Virus titre**. Titrate the vaccine virus by inoculation into embryonated hens' eggs from an SPF flock (*5.2.2*) or into suitable cell cultures (*5.2.4*). The vaccine complies with the test if 1 dose contains not less than the minimum virus titre stated on the label.

3-6. **Potency**. Depending on the indications, the vaccine complies with 1 or both of the tests prescribed under Immunogenicity (section 2-4-5) when administered according to the recommended schedule by a recommended route and method. If the test in section 2-4-5-2. *Vaccine for use in avian species other than the chicken* is conducted and the vaccine is recommended for use in more than 1 avian species, the test is carried out with birds of that species for which the vaccine is recommended which is likely to be the most susceptible to avian paramyxovirus 1. It is not necessary to carry out the potency test for each batch of the vaccine if it has been carried out on a representative batch using a vaccinating dose containing not more than the minimum virus titre stated on the label.

04/2013:2072

PASTEURELLA VACCINE (INACTIVATED) FOR SHEEP

Vaccinum pasteurellae inactivatum ad ovem

1. DEFINITION

Pasteurella vaccine (inactivated) for sheep is a preparation of one or more suitable strains of *Pasteurella trehalosi*, inactivated while maintaining adequate immunogenic properties. This monograph applies to vaccines intended for the active immunisation of sheep against disease caused by *P. trehalosi*.

2. PRODUCTION

2-1. *PREPARATION OF THE VACCINE*

Production of the vaccine is based on a seed-lot system. The seed material is cultured in a suitable medium; each strain is cultivated separately and identity is verified using a suitable method. During production, various parameters such as growth rate are monitored by suitable methods; the values are within the limits approved for the particular product. Purity and identity of the harvest are verified using suitable methods. After cultivation, the bacterial suspensions are collected separately and inactivated by a suitable method. The vaccine may be adjuvanted.

2-2. *CHOICE OF VACCINE COMPOSITION*

The choice of composition and the strains to be included in the vaccine are based on epidemiological data on the prevalence of the different serovars of *P. trehalosi*.

The vaccine is shown to be satisfactory with respect to safety (*5.2.6*) and efficacy (*5.2.7*) for the sheep for which it is intended.

The following tests for safety (section 2-2-1) and immunogenicity (section 2-2-2) may be used during the demonstration of safety and efficacy.

2-2-1. **Safety**

2-2-1-1. *Laboratory tests*. Carry out the tests for each route and method of administration to be recommended for vaccination and in sheep of each category for which the vaccine is intended (for example, young sheep, pregnant ewes). Use a batch of vaccine containing not less than the maximum potency that may be expected in a batch of vaccine.

For each test, use not fewer than 8 sheep that preferably do not have antibodies against the serovars of *P. trehalosi* or against the leucotoxin present in the vaccine. Where justified, sheep with a known history of no previous pasteurella vaccination and with low antibody titres (measured in a sensitive test system such as ELISA) may be used. Administer to each sheep 1 dose of the vaccine. If the schedule to be recommended requires a 2nd dose, administer another dose after an interval of at least 14 days. Observe the sheep at least daily for at least 14 days after the last administration. Record body temperature the day before vaccination, at vaccination, 2 h, 4 h and 6 h later and then daily for 4 days; note the maximum temperature increase for each sheep.

The vaccine complies with the test if no sheep shows abnormal local reactions, notable signs of disease or dies from causes attributable to the vaccine, if the average body temperature increase for all sheep does not exceed 1.5 °C and no sheep shows a rise greater than 2.0 °C.

2-2-1-2. *Field studies*. The sheep used for the field trials are also used to evaluate safety. Carry out a test in each category of sheep for which the vaccine is intended. Use not fewer than 3 groups of 20 sheep with corresponding groups of not fewer than 10 controls in 3 different locations. Examine the injection sites for local reactions after vaccination. Record body temperatures the day before vaccination, at vaccination and on the 2 days following vaccination.

The vaccine complies with the test if no sheep shows abnormal local or systemic reactions, notable signs of disease or dies from causes attributable to the vaccine. The average body temperature increase for all sheep does not exceed 1.5 °C and no sheep shows a rise greater than 2.0 °C. In addition, if the vaccine is intended for use in pregnant ewes, no adverse effects on the pregnancy and offspring are demonstrated.

2-2-2. **Immunogenicity**. Carry out a test for each serovar of *P. trehalosi* for which protection is to be claimed on the label.

A test is carried out for each route and method of administration to be recommended, using in each case lambs of the minimum age to be recommended for vaccination. The vaccine administered to each lamb is of minimum potency.

Use not fewer than 20 lambs that do not have antibodies against *P. trehalosi* and against the leucotoxin of *P. trehalosi*. Vaccinate not fewer than 10 lambs according to the schedule to be recommended. Maintain not fewer than 10 lambs as controls. 20-22 days after the last vaccination, challenge each lamb by the subcutaneous or another suitable route, with a sufficient quantity of a low-passage, virulent strain of a serovar of *P. trehalosi*. Observe the lambs for a further 7 days; to avoid unnecessary suffering, severely ill lambs are euthanised and are then considered to have died from the disease. During the observation period, examine the lambs for any signs of disease (for example, severe dullness, excess salivation) and record the mortality. Euthanise surviving lambs at the end of the observation period. Carry out post-mortem examination on any lamb that dies and those euthanised at the end of the observation period. Examine the lungs, pleura, liver and spleen for haemorrhages and evaluate the extent of lung consolidation due to pasteurellosis. Collect samples of lung, liver and spleen tissue for re-isolation of the challenge organisms. Score the mortality, clinical observations and the post-mortem lesions and compare the results obtained for these parameters and the bacterial re-isolation results for the 2 groups.

The test is not valid if signs or lesions of *P. trehalosi* infection occur in less than 70 per cent of the control lambs. The vaccine complies with the test if there is a significant difference between the scores obtained for the clinical and post-mortem observations in the vaccinates compared to the controls. For vaccines with a claim for a beneficial effect on the extent of infection against the serovar, the results for the infection rates are also significantly better for the vaccinates compared to the controls.

2-3. *MANUFACTURER'S TESTS*

2-3-1. **Batch potency test**. It is not necessary to carry out the potency test (section 3-3) for each batch of vaccine if it has been carried out using a batch of vaccine with a minimum potency. Where the test is not carried out, an alternative validated method is used, the criteria for acceptance being set with reference to a batch of vaccine that has given satisfactory results in the test described under Potency.

2-3-2. **Bacterial endotoxins**. A test for bacterial endotoxins (*2.6.14*) is carried out on the final lot or, where the nature of the adjuvant prevents performance of a satisfactory test, on the bulk antigen or the mixture of bulk antigens immediately before addition of the adjuvant. The maximum acceptable amount of bacterial endotoxins is that found for a batch of vaccine that has been shown satisfactory in safety tests 2-2-1-1 given under Choice of vaccine composition. The method chosen for determining the amount of bacterial endotoxin present in the vaccine batch used in the safety test for determining the maximum acceptable level of endotoxin is used subsequently for testing of each batch.

3. BATCH TESTS

3-1. **Identification**. When injected into healthy animals that do not have specific antibodies against the serovars of *P. trehalosi* and/or against the leucotoxin present in the vaccine, the vaccine stimulates the production of such antibodies.

3-2. **Bacteria and fungi**. The vaccine, including where applicable the diluent supplied for reconstitution, complies with the test for sterility prescribed in the monograph *Vaccines for veterinary use (0062)*.

3-3. **Potency**. The vaccine complies with the requirements of the test mentioned under Immunogenicity (section 2-2-2) when administered by a recommended route and method.

04/2013:1360

PORCINE ACTINOBACILLOSIS VACCINE (INACTIVATED)

Vaccinum actinobacillosidis inactivatum ad suem

1. DEFINITION

Porcine actinobacillosis vaccine (inactivated) is a preparation which has one or more of the following components: inactivated *Actinobacillus pleuropneumoniae* of a suitable strain or strains; toxins, proteins or polysaccharides derived from suitable strains of *A. pleuropneumoniae*, and treated to render them harmless while maintaining adequate immunogenic properties; fractions of toxins derived from suitable strains of *A. pleuropneumoniae* and treated if necessary to render them harmless while maintaining adequate immunogenic properties. This monograph applies to vaccines intended for the active immunisation of pigs against actinobacillosis.

2. PRODUCTION

2-1. *PREPARATION OF THE VACCINE*

The seed material is cultured in a suitable medium; each strain is cultivated separately. During production, various parameters such as growth rate, protein content and quantity of relevant antigens are monitored by suitable methods; the values are within the limits approved for the particular product. Purity and identity are verified on the harvest using suitable methods. After cultivation, the bacterial harvests are collected separately and inactivated by a suitable method. They may be detoxified, purified and concentrated. The vaccine may be adjuvanted.

2-2. *CHOICE OF VACCINE COMPOSITION*

The choice of strains is based on epidemiological data. The vaccine is shown to be satisfactory with respect to safety (*5.2.6*) and efficacy (*5.2.7*) for the pigs for which it is intended.

The following tests for safety (section 2-2-1) and immunogenicity (section 2-2-2) may be used during the demonstration of safety and efficacy.

2-2-1. **Safety**

2-2-1-1. *Laboratory tests*. Carry out the test for each route and method of administration to be recommended for vaccination and where applicable, in pigs of each category for which the vaccine is intended, using in each case pigs not older than the minimum age to be recommended for vaccination. Use a batch containing not less than the maximum potency that may be expected in a batch of vaccine.

For each test, use not fewer than 8 pigs that do not have antibodies against the serotypes of *A. pleuropneumoniae* or its toxins present in the vaccine. Administer to each pig 1 dose of the vaccine. If the schedule to be recommended requires a 2nd dose, administer another dose after an interval of at least 14 days. Observe the pigs at least daily until 14 days after the last administration. Record body temperature the day before vaccination, at vaccination, 2 h, 4 h and 6 h later and then daily for 4 days; note the maximum temperature increase for each pig.

The vaccine complies with the test if no pig shows abnormal local or systemic reactions or dies from causes attributable to the vaccine, and if the average temperature increase for all pigs does not exceed 1.5 °C and no pig shows a rise greater than 2.0 °C.

2-2-1-2. *Field studies*. The pigs used for field trials are also used to evaluate safety. Carry out a test in each category of pigs for which the vaccine is intended. Use not fewer than 3 groups each of not fewer than 20 pigs with corresponding groups of not fewer than 10 controls. Examine the injection site for local reactions after vaccination. Record body temperature the day

before vaccination, at vaccination, at the time interval after which a rise in temperature, if any, was seen in test 2-2-1-1, and daily during the 2 days following vaccination; note the maximum temperature increase for each pig.

The vaccine complies with the test if no pig shows abnormal local or systemic reactions or dies from causes attributable to the vaccine, and if the average temperature increase for all pigs does not exceed 1.5 °C and no pig shows a rise greater than 2.0 °C.

2-2-2. **Immunogenicity**

The challenge strain for the following test is chosen to ensure challenge with each Ap toxin[(1)] produced by the serotypes to be stated on the label; it may be necessary to carry out more than one test using a different challenge strain for each test.

Each test is carried out for each route and method of administration to be recommended. The vaccine administered to each pig is of minimum potency.

For each test, use not fewer than 14 pigs that do not have antibodies against *A. pleuropneumoniae* and Ap toxins. Vaccinate not fewer than 7 pigs according to the schedule to be recommended. Maintain not fewer than 7 pigs as controls. 3 weeks after the last vaccination, challenge all the pigs by the intranasal or intratracheal route or by aerosol with a sufficient quantity of a virulent serotype of *A. pleuropneumoniae*. Observe the pigs at least daily for 7 days; to avoid unnecessary suffering, severely ill control pigs are euthanised and are then considered to have died from the disease. Euthanise all surviving pigs at the end of the observation period. Carry out a post-mortem examination on all pigs. Examine the lungs, the tracheobronchial lymph nodes and the tonsils for the presence of *A. pleuropneumoniae*. Evaluate the extent of lung lesions at post-mortem examination. Each of the 7 lobes of the lungs is allotted a maximum possible lesion score[(2)] of 5. The area showing pneumonia and/or pleuritis of each lobe is assessed and expressed on a scale of 0 to 5 to give the pneumonic score per lobe (the maximum total score possible for each complete lung is 35). Calculate separately for the vaccinated and the control pigs the total score (the maximum score per group is 245, if 7 pigs are used per group).

The vaccine complies with the test if the vaccinated pigs, when compared with controls, show lower incidence of: mortality; typical signs (dyspnoea, coughing and vomiting); typical lung lesions; re-isolation of *A. pleuropneumoniae* from the lungs, the tracheobronchial lymph nodes and the tonsils. Where possible, the incidence is analysed statistically and shown to be significantly lower for vaccinates.

2-3. *MANUFACTURER'S TESTS*

2-3-1. **Batch potency test**. It is not necessary to carry out the potency test (section 3-4) for each batch of vaccine if it has been carried out using a batch of vaccine with a minimum potency. Where the test is not carried out, an alternative validated method is used, the criteria for acceptance being set with reference to a batch of vaccine that has given satisfactory results in the test described under Potency. The following test may be used.

Use 5 mice weighing 18-20 g and that do not have antibodies against the serotypes of *A. pleuropneumoniae* or its toxins present in the vaccine. Vaccinate each mouse by the subcutaneous route with a suitable dose. Where the recommended schedule requires a booster injection to be given, a booster vaccination may also be given in this test provided it has been demonstrated that this will still provide a suitably sensitive test system. Before the vaccination and at a given interval within the range of 14-21 days after the last injection, collect blood from each mouse and prepare serum samples. Determine individually for each serum the titre of specific antibodies against each antigenic component stated on the label, using a suitable validated test such as enzyme-linked immunosorbent assay (*2.7.1*). The vaccine complies with the test if the antibody levels are not significantly lower than those obtained for a batch that has given satisfactory results in the test described under Potency.

2-3-2. **Bacterial endotoxins**. A test for bacterial endotoxins (*2.6.14*) is carried out on the final bulk or, where the nature of the adjuvant prevents performance of a satisfactory test, on the bulk antigen or mixture of bulk antigens immediately before addition of the adjuvant. The maximum acceptable amount of bacterial endotoxins is that found for a batch of vaccine that has been shown satisfactory in safety test 2-2-1-1 described under Choice of vaccine composition or in the residual toxicity test described under Batch tests, carried out using 10 pigs. Where the latter test is used, note the maximum temperature increase for each animal; the vaccine complies with the test if the average temperature increase for all animals does not exceed 1.5 °C. The method chosen for determining the amount of bacterial endotoxin present in the vaccine batch used in the safety test for determining the maximum acceptable level of endotoxin is used subsequently for batch testing.

3. BATCH TESTS

3-1. **Identification**. When injected into healthy animals that do not have specific antibodies against the antigenic components of *A. pleuropneumoniae* stated on the label, the vaccine stimulates the production of such antibodies.

3-2. **Bacteria and fungi**. The vaccine, including where applicable the diluent supplied for reconstitution, complies with the test for sterility prescribed in the monograph *Vaccines for veterinary use (0062)*.

3-3. **Residual toxicity**. Use 2 pigs of the minimum age recommended for vaccination and that do not have antibodies against the serotypes of *A. pleuropneumoniae* or its toxins present in the vaccine. Administer to each pig by a recommended route a double dose of the vaccine. Observe the pigs at least daily for 14 days. Record body temperature the day before vaccination, at vaccination, 2 h, 4 h and 6 h later and then daily for 2 days.

It is recommended to use the mean temperature of the days before administration of the vaccine (e.g. day – 3 to day 0) as the baseline temperature to have clear guidance for evaluation of the test.

The vaccine complies with the test if no pig shows notable signs of disease or dies from causes attributable to the vaccine; a transient temperature increase not exceeding 2.0 °C may occur.

3-4. **Potency**. The vaccine complies with the requirements of the test mentioned under Immunogenicity (section 2-2-2) when administered by a recommended route and method.

04/2013:2448

PORCINE ENZOOTIC PNEUMONIA VACCINE (INACTIVATED)

Vaccinum pneumoniae enzooticae suillae inactivatum

1. DEFINITION

Porcine enzootic pneumonia vaccine (inactivated) is a preparation of a suitable strain of *Mycoplasma hyopneumoniae* that has been inactivated while maintaining adequate immunogenic properties. This monograph applies to vaccines intended for the active immunisation of pigs against enzootic pneumonia caused by *M. hyopneumoniae*.

(1) The nomenclature of the toxins of *A. pleuropneumoniae* is described by J. Frey *et al.*, *Journal of General Microbiology*, 1993, 139, 1723-1728.
(2) The system of lung scores is described in detail by P.C.T. Hannan, B.S. Bhogal, J.P. Fish, *Research in Veterinary Science*, 1982, 33, 76-88.

Vaccines

2. PRODUCTION

2-1. *PREPARATION OF THE VACCINE*

Production of the vaccine is based on a seed-lot system. The seed material is cultured in a suitable solid and/or liquid medium to ensure optimal growth under the chosen incubation conditions. The identity of the strain is verified using a suitable method.

During production, various parameters such as growth rate are monitored by suitable methods; the values are within the limits approved for the particular vaccine. Purity of the harvest is verified using a suitable method.

After cultivation, the mycoplasma suspension is collected and inactivated by a suitable method. The vaccine may contain an adjuvant.

2-2. *CHOICE OF VACCINE COMPOSITION*

The vaccine is shown to be satisfactory with respect to safety (*5.2.6*) and efficacy (*5.2.7*) for the pigs for which it is intended. The following tests for safety (section 2-2-1) and immunogenicity (section 2-2-2) may be used during the demonstration of safety and efficacy.

2-2-1. **Safety**

2-2-1-1. *Laboratory tests*. Carry out the test for each route and method of administration to be recommended for vaccination and where applicable, in pigs of each category for which the vaccine is intended, using in each case pigs not older than the minimum age to be recommended for vaccination. Use a batch of vaccine containing not less than the maximum potency that may be expected in a batch of vaccine.

For each test, use not fewer than 8 pigs that do not have antibodies against *M. hyopneumoniae*. Administer to each pig 1 dose of the vaccine. If the schedule to be recommended requires a 2nd dose, administer another dose after an interval of at least 14 days. Observe the pigs at least daily until at least 14 days after the last administration. Record body temperature the day before vaccination, at vaccination, 4 h later and then daily for 4 days; note the maximum temperature increase for each pig.

The vaccine complies with the test if no pig shows notable signs of disease or dies from causes attributable to the vaccine, and, in particular, if the average body temperature increase for all pigs does not exceed 1.5 °C and no pig shows a rise greater than 2.0 °C.

2-2-1-2. *Field studies*. The animals used for field trials are also used to evaluate safety. Carry out a test in each category of animals for which the vaccine is intended. Use not fewer than 3 groups each of not fewer than 20 animals with corresponding groups of not fewer than 10 controls. Examine the injection site for local reactions after vaccination. Record body temperature the day before vaccination, at vaccination, at the time interval after which a rise in temperature, if any, was seen in test 2-2-1-1, and daily during the 2 days following vaccination; note the maximum temperature increase for each animal.

The vaccine complies with the test if no animal shows notable signs of disease or dies from causes attributable to the vaccine, the average body temperature increase for all animals does not exceed 1.5 °C, and no animal shows a rise in body temperature greater than 2.0 °C.

2-2-2. **Immunogenicity**. A test is carried out for each route and method of administration to be recommended using in each case pigs not older than the minimum age to be recommended for vaccination. The vaccine to be administered to each pig is of minimum potency.

Use not fewer than 20 pigs that do not have antibodies against *M. hyopneumoniae* and that are from a herd or herds where there are no signs of enzootic pneumonia and that have not been vaccinated against *M. hyopneumoniae*. Vaccinate not fewer than 12 pigs according to the schedule to be recommended. Maintain not fewer than 8 non-vaccinated pigs as controls. Challenge each pig at least 14 days after the last vaccination by the intranasal or intratracheal route or by aerosol with a sufficient quantity of a virulent strain of *M. hyopneumoniae*. The challenge strain used is different from the vaccine strain. 21-30 days after challenge, euthanise the pigs. Conduct a post-mortem examination on each pig in order to evaluate the extent of lung lesions using a validated lung lesion scoring system that is adapted to the age of the animals. The following scoring system may be used.

A weighted score is allocated to each of the 7 lobes of the lungs according to the relative weight of the lung lobes.

Lobes	Left	Right
Apical	5	11
Cardiac	6	10
Diaphragmatic	29	34
Intermediate	5	

The vaccine complies with the test if the vaccinated pigs, when compared with controls, show a significant reduction in the lung lesion score.

2-3. *MANUFACTURER'S TESTS*

2-3-1. **Batch potency test**. It is not necessary to carry out the potency test (section 3-4) for each batch of the vaccine if it has been carried out using a batch of vaccine with a minimum potency. Where the test is not carried out, an alternative validated method is used, the criteria for acceptance being set with reference to a batch of vaccine that has given satisfactory results in the test described under Potency. A quantification of the antigen (i.e. an *in vitro* test using a reference vaccine that has given satisfactory results in the test described under Potency) together with a test for adjuvant quantification may be used as an alternative method provided the antigen that is measured has been proven to be protective and/or immunorelevant.

Alternatively, a test measuring induction of antibody response in laboratory animals may be used. The following method is given as an example.

Use at least 5 mice weighing 18-20 g and that do not have antibodies against *M. hyopneumoniae*. Vaccinate each mouse by the subcutaneous route with a suitable dose. Maintain not fewer than 5 mice as controls. Where the recommended schedule requires a booster injection to be given, a booster vaccination may also be given in this test provided it has been demonstrated that this will still provide a suitably sensitive test system. Before the vaccination and at a given interval within the range of 14-21 days after the last injection, collect blood from each mouse and prepare serum samples. Determine individually for each serum the titre of specific antibodies against each antigenic component stated on the label, using a suitable validated test such as enzyme-linked immunosorbent assay (*2.7.1*).

The vaccine complies with the test if the mean antibody levels are not significantly lower than those obtained for a batch that has given satisfactory results in the test described under Potency.

3. BATCH TESTS

3-1. **Identification**. When injected into healthy animals that do not have antibodies against *M. hyopneumoniae*, the vaccine stimulates the production of such antibodies. Suitable molecular methods such as nucleic acid amplification techniques (*2.6.21*) may also serve for identification.

3-2. **Bacteria and fungi**. The vaccine, including where applicable the diluent supplied for reconstitution, complies with the test for sterility prescribed in the monograph *Vaccines for veterinary use (0062)*.

3-3. **Residual live mycoplasmas**. A test for residual live mycoplasmas is carried out to confirm inactivation of *M. hyopneumoniae*. The vaccine complies with a validated test

for residual live *M. hyopneumoniae* carried out by a culture method (see for example *2.6.7*, using media shown to be suitable for *M. hyopneumoniae*).

3-4. **Potency**. The vaccine complies with the requirements of the test mentioned under Immunogenicity (section 2-2-2) when administered by a recommended route and method.

04/2013:0963

PORCINE INFLUENZA VACCINE (INACTIVATED)

Vaccinum influenzae inactivatum ad suem

1. DEFINITION

Porcine influenza vaccine (inactivated) is a preparation of one or more suitable strains of swine or human influenza virus inactivated while maintaining adequate immunogenic properties. Suitable strains contain both haemagglutinin and neuraminidase. This monograph applies to vaccines intended for the active immunisation of pigs against porcine influenza.

2. PRODUCTION

2-1. *PREPARATION OF THE VACCINE*

The vaccine virus is grown in embryonated hens' eggs or in cell cultures. Each virus strain is cultivated separately. After cultivation, the viral suspensions are collected separately and inactivated by a suitable method. If necessary, they may be purified. The vaccine may be adjuvanted.

2-2. *SUBSTRATE FOR VIRUS PROPAGATION*

2-2-1. **Embryonated hens' eggs**. If the vaccine virus is grown in embryonated hens' eggs, they are obtained from a healthy flock.

2-2-2. **Cell cultures**. If the vaccine virus is grown in cell cultures, they comply with the requirements for cell cultures for production of veterinary vaccines (*5.2.4*).

2-3. *CHOICE OF VACCINE COMPOSITION*

The choice of strains is based on the antigenic types and sub-types observed in Europe. The vaccine is shown to be satisfactory with respect to safety (*5.2.6*) and efficacy (*5.2.7*) for the pigs for which it is intended.

The following tests for safety (section 2-3-1.) and immunogenicity (section 2-3-2.) may be used during the demonstration of safety and efficacy.

2-3-1. **Safety**

2-3-1-1. *Laboratory tests*. Carry out the tests for each route and method of administration to be recommended for vaccination and where applicable, in pigs of each category for which the vaccine is intended (sows, fattening pigs), using in each case pigs not older than the minimum age to be recommended for vaccination. Use a batch of vaccine containing not less than the maximum potency that may be expected in a batch of vaccine.

2-3-1-1-1. General safety. For each test, use not fewer than 8 pigs that do not have antibodies against swine influenza virus. Administer to each pig 1 dose of the vaccine. If the schedule to be recommended requires a 2nd dose, administer another dose after an interval of at least 14 days. Observe the pigs at least daily until 14 days after the last administration.

The vaccine complies with the test if no pig shows abnormal local or systemic reactions or dies from causes attributable to the vaccine during the test.

2-3-1-1-2. Safety in the pigs used in test 2-3-2 for immunogenicity. The pigs used in the test for immunogenicity are also used to evaluate safety. Measure the body temperature of each vaccinated pig at the time of vaccination and 24 h and 48 h later. Examine the injection site at slaughter for local reactions.

The vaccine complies with the test if no pig shows:

- abnormal body temperature;
- other systemic reactions (for example, anorexia);
- abnormal local reactions attributable to the vaccine.

2-3-1-2. *Field studies*. The pigs used for field trials are also used to evaluate safety. Carry out a test in each category of pigs for which the vaccine is intended (sows, fattening pigs). Use not fewer than 3 groups each of not fewer than 20 pigs in at least 2 locations with corresponding groups of not fewer than 10 controls. Measure the body temperature of each vaccinated pig at the time of vaccination and 24 h and 48 h later. Examine the injection site at slaughter for local reactions.

The vaccine complies with the test if no pig shows:

- abnormal body temperature;
- abnormal local reactions attributable to the vaccine.

2-3-2. **Immunogenicity**. The following test carried out using an epidemiologically relevant challenge strain or strains is suitable to demonstrate the immunogenicity of the vaccine. It is carried out for each subtype used in the preparation of the vaccine.

A test is carried out for each route and method of administration to be recommended, using in each case pigs of the minimum age to be recommended for vaccination. The vaccine administered to each pig is of minimum potency.

Use for the test not fewer than 20 pigs that do not have antibodies against swine influenza virus. Vaccinate not fewer than 10 pigs according to the schedule to be recommended. Maintain not fewer than 10 pigs as controls. Take a blood sample from all control pigs immediately before challenge. 3 weeks after the last administration of vaccine, challenge all the pigs by the intratracheal route with a sufficient quantity of a virulent influenza field virus. Euthanise half of the vaccinated and control pigs 24 h after challenge and the other half 72 h after challenge. For each pig, measure the quantity of influenza virus in 2 lung tissue homogenates, one from the left apical, cardiac and diaphragmatic lobes, and the other from the corresponding right lung lobes. Take equivalent samples from each pig.

The test is not valid if antibodies against influenza virus are found in any control pig immediately before challenge. The vaccine complies with the test if, at both times of measurement, the mean virus titre in the pooled lung tissue samples of vaccinated pigs is significantly lower than that for control pigs, when analysed by a suitable statistical method such as the Wilcoxon Mann-Whitney test.

2-4. *MANUFACTURER'S TESTS*

2-4-1. **Residual live virus**. An amplification test for residual live virus is carried out on each batch of antigen immediately after inactivation by passage in the same type of substrate as that used for production (eggs or cell cultures) or a substrate shown to be at least as sensitive. The quantity of inactivated virus harvest used in the test is equivalent to not less than 10 doses of the vaccine. The inactivated viral harvest complies with the test if no live virus is detected.

2-4-2. **Batch potency test**. It is not necessary to carry out the potency test (section 3-5) for each batch of vaccine if it has been carried out using a batch of vaccine with a minimum potency. Where the test is not carried out, an alternative validated method is used, the criteria for acceptance being set with reference to a batch of vaccine that has given satisfactory results in the test described under Potency. The following test may be used.

Use 5 guinea-pigs, 5-7 weeks old and that do not have antibodies against swine influenza virus. Vaccinate each guinea-pig by the subcutaneous route with a quarter of the recommended dose. Collect blood samples before the vaccination and 21 days after vaccination. Determine for each sample the level of specific antibodies against each virus subtype in the vaccine by haemagglutination-inhibition or

Vaccines

another suitable test. The vaccine complies with the test if the level of antibodies is not lower than that found for a batch of vaccine that gave satisfactory results in the potency test in pigs (see Potency).

2-4-3. **Bacterial endotoxins**. For vaccines produced in eggs, the content of bacterial endotoxins is determined on the virus harvest to monitor production.

3. BATCH TESTS

3-1. **Identification**. When injected into healthy animals that do not have specific antibodies against the influenza virus subtypes included in the vaccine, the vaccine stimulates the production of such antibodies. The antibodies may be detected by a suitable immunochemical method (*2.7.1*).

3-2. **Bacteria and fungi**. The vaccine, including where applicable the diluent supplied for reconstitution, complies with the test for sterility prescribed in the monograph *Vaccines for veterinary use (0062)*.

3-3. **Residual live virus**

3-3-1. *Vaccines prepared in eggs*. If the vaccine has been prepared in eggs, inoculate 0.2 mL into the allantoic cavity of each of 10 fertilised hen eggs, 9-11 days old. Incubate at a suitable temperature for 3 days. The death of any embryo within 24 h of inoculation is considered as non-specific mortality and the egg is discarded. The test is not valid if fewer than 80 per cent of the eggs survive. Collect the allantoic fluid of each egg, pool equal quantities and carry out a 2nd passage on fertilised eggs in the same manner. Incubate for 4 days; the vaccine complies with the test if the allantoic fluid of these eggs shows no haemagglutinating activity.

3-3-2. *Vaccines prepared in cell cultures*. If the vaccine has been prepared in cell cultures, carry out a suitable test for residual live virus using 2 passages in the same type of cell culture as used in the production of vaccine. The vaccine complies with the test if no live virus is detected. If the vaccine contains an oily adjuvant that interferes with this test, where possible separate the aqueous phase from the vaccine by means that do not diminish the capacity to detect residual infectious influenza virus.

3-4. **Specified extraneous agents**. Use not fewer than 2 pigs that do not have antibodies against swine influenza virus, against Aujeszky's disease virus and against pestiviruses. Administer to each pig by a recommended route a double dose of the vaccine, then another dose after 14 days. 14 days after the last administration, carry out tests for antibodies. The vaccine complies with the test if it does not stimulate the formation of antibodies against pestiviruses and Aujeszky's disease virus.

3-5. **Potency**. The vaccine complies with the requirements of the test mentioned under Immunogenicity (section 2-3-2) when administered by a recommended route and method.

04/2013:0965

PORCINE PARVOVIROSIS VACCINE (INACTIVATED)

Vaccinum parvovirosis inactivatum ad suem

1. DEFINITION

Porcine parvovirosis vaccine (inactivated) is a preparation of a suitable strain of porcine parvovirus, inactivated while maintaining adequate immunogenic properties, or of a non infectious fraction of the virus. This monograph applies to vaccines intended for the active immunisation of sows and gilts for protection of their progeny against transplacental infection.

2. PRODUCTION

2-1. *PREPARATION OF THE VACCINE*

The vaccine virus is grown in cell cultures. The viral suspension is harvested; the virus is inactivated by a suitable method and may be fragmented (inactivation may be by fragmentation); the virus or viral fragments may be purified and concentrated at a suitable stage of the process. The vaccine may be adjuvanted.

2-2. *SUBSTRATE FOR VIRUS PROPAGATION*

2-2-1. **Cell cultures**. The cell cultures comply with the requirements for cell cultures for production of veterinary vaccines (*5.2.4*).

2-3. *CHOICE OF VACCINE COMPOSITION*

The vaccine is shown to be satisfactory with respect to safety (*5.2.6*) (including absence of adverse effects on fertility, gestation, farrowing or offspring) and efficacy (*5.2.7*) for the pigs for which it is intended.

The following tests for safety (section 2-3-1) and immunogenicity (section 2-3-2) may be used during the demonstration of safety and efficacy.

2-3-1. **Safety**

2-3-1-1. *Laboratory tests*. Carry out the tests for each route and method of administration to be recommended for vaccination and where applicable, in pigs of each category for which the vaccine is intended, using in each case pigs not older than the minimum age to be recommended for vaccination. Use a batch of vaccine containing not less than the maximum potency that may be expected in a batch of vaccine.

2-3-1-1-1. General safety. For each test, use not fewer than 8 pigs that do not have antibodies against porcine parvovirus or against a fraction of the virus. Administer to each pig 1 dose of the vaccine. If the schedule to be recommended requires a 2nd dose, administer another dose after an interval of at least 14 days. Observe the pigs at least daily until 14 days after the last administration.

The vaccine complies with the test if no pig shows notable signs of disease or dies from causes attributable to the vaccine during the test.

2-3-1-1-2. Safety in pregnant sows. If the vaccine is intended for use in pregnant sows, use for the test not fewer than 8 pregnant sows at the stage or at different stages of pregnancy according to the recommended schedule. Administer to each sow 1 dose of the vaccine. If the schedule to be recommended requires a 2nd dose, administer another dose after an interval of at least 14 days. Observe the sows at least daily until farrowing.

The vaccine complies with the test if no sow shows abnormal local or systemic reactions or dies from causes attributable to the vaccine and if no adverse effects on gestation or the offspring are noted.

2-3-1-1-3. Safety in the pigs used in test 2-3-2 for immunogenicity. The pigs used in the test for immunogenicity are also used to evaluate safety. Measure the body temperature of each vaccinated pig at the time of vaccination 24 h and 48 h later. Examine the injection site after vaccination and at slaughter for local reactions.

The vaccine complies with the test if no pig shows:

- abnormal body temperature;
- other systemic reactions (for example, anorexia);
- abnormal local reactions attributable to the vaccine.

2-3-1-2. *Field studies*. The pigs used for field trials are also used to evaluate safety. Carry out a test in each category of pigs for which the vaccine is intended (sows, gilts). Use not fewer than 3 groups each of not fewer than 20 pigs with corresponding groups of not fewer than 10 controls. Measure the body temperature of each vaccinated pig at the time of vaccination, 24 h and 48 h later. Examine the injection site after vaccination and at slaughter for local reactions.

The vaccine complies with the test if no pig shows:

- abnormal body temperature;
- abnormal local reactions attributable to the vaccine.

2-3-2. **Immunogenicity**. A test is carried out for each route and method of administration to be recommended, using in each case gilts of 5-6 months old. The vaccine administered to each gilt is of minimum potency.

Use for the test not fewer than 12 gilts that do not have antibodies against porcine parvovirus or against a fraction of the virus. Vaccinate not fewer than 7 gilts according to the schedule to be recommended. Maintain not less than 5 unvaccinated gilts of the same age as controls. The interval between vaccination and service is that to be recommended. Mate all the gilts on 2 consecutive days immediately following signs of oestrus. At about the 40th day of gestation, challenge each gilt with a suitable quantity of a virulent strain of porcine parvovirus. Euthanise the gilts at about the 90th day of gestation and examine their foetuses for infection with porcine parvovirus as demonstrated by the presence of either virus or antibodies.

The test is not valid if:

- fewer than 7 vaccinated gilts and 5 control gilts are challenged;
- fewer than 90 per cent of piglets from the control gilts are infected;
- and the average number of piglets per litter for the vaccinated gilts is fewer than 6.

The vaccine complies with the test if not fewer than 80 per cent of the total number of piglets from vaccinated gilts are protected from infection.

2-4. *MANUFACTURER'S TESTS*

2-4-1. **Residual live virus**. A test for residual live virus is carried out on each batch of antigen immediately after inactivation. The quantity of inactivated viral harvest used in the test is equivalent to not less than 100 doses of the vaccine. The bulk harvest is inoculated into suitable non-confluent cells; after incubation for 7 days, a subculture is made using trypsinised cells. After incubation for a further 7 days, the cultures are examined for residual live parvovirus by an immunofluorescence test. The inactivated viral harvest complies with the test if no live virus is detected.

2-4-2. **Batch potency test**. It is not necessary to carry out the potency test (section 3-5) for each batch of the vaccine if it has been carried out using a batch of vaccine with a minimum potency. Where the test is not carried out, an alternative validated method is used, the criteria for acceptance being set with reference to a batch of vaccine that has given satisfactory results in the test described under Potency. The following test may be used.

Use not fewer than 5 guinea-pigs, 5-7 weeks old and that do not have antibodies against porcine parvovirus or against a fraction of the virus. Vaccinate each guinea-pig by the subcutaneous route with a quarter of the prescribed dose volume. Take blood samples after the period corresponding to maximum antibody production and carry out tests on the serum for specific antibodies by a haemagglutination-inhibition test or other suitable test. The vaccine complies with the test if the level of antibodies is not lower than that found for a batch of vaccine that has given satisfactory results in the test described under Potency.

3. BATCH TESTS

3-1. **Identification**. When injected into animals that do not have specific antibodies against porcine parvovirus or the fraction of the virus used in the production of the vaccine, on one or, if necessary, more than one occasion, the vaccine stimulates the formation of such antibodies.

3-2. **Bacteria and fungi**. The vaccine, including where applicable the diluent supplied for reconstitution, complies with the test for sterility prescribed in the monograph *Vaccines for veterinary use (0062)*.

3-3. **Residual live virus**. Use a quantity of vaccine equivalent to 10 doses. If the vaccine contains an oily adjuvant, break the emulsion and separate the phases. If the vaccine contains a mineral adjuvant, carry out an elution to liberate the virus. Concentrate the viral suspension 100 times by ultrafiltration or ultracentrifugation. None of the above procedures must be such as to inactivate or otherwise interfere with detection of live virus. Carry out a test for residual live virus in suitable non-confluent cells; after incubation for 7 days, make a subculture using trypsinised cells. After incubation for a further 7 days, examine the cultures for residual live parvovirus by an immunofluorescence test. The vaccine complies with the test if no live virus is detected.

3-4. **Specified extraneous agents**. Use 2 pigs that do not have antibodies against porcine parvovirus or against a fraction of the virus, against Aujeszky's disease virus or against pestiviruses. Administer to each pig by a recommended route a double dose of the vaccine, then another dose after 14 days. 14 days after the last administration, carry out tests for antibodies. The vaccine complies with the test if it does not stimulate the formation of antibodies against pestiviruses and against Aujeszky's disease virus.

3-5. **Potency**. The vaccine complies with the requirements of the test mentioned under Immunogenicity (section 2-3-2) when administered by a recommended route and method.

04/2013:1361

PORCINE PROGRESSIVE ATROPHIC RHINITIS VACCINE (INACTIVATED)

Vaccinum rhinitidis atrophicantis ingravescentis suillae inactivatum

1. DEFINITION

Porcine progressive atrophic rhinitis vaccine (inactivated) is a preparation containing either the dermonecrotic exotoxin of *Pasteurella multocida*, treated to render it harmless while maintaining adequate immunogenic properties, or a genetically modified form of the exotoxin that has adequate immunogenic properties and that is free from toxic properties; the vaccine may also contain cells and/or antigenic components of one or more suitable strains of *P. multocida* and/or *Bordetella bronchiseptica*. This monograph applies to vaccines intended for the active immunisation of sows and gilts for passive protection of their progeny against porcine progressive atrophic rhinitis.

2. PRODUCTION

2-1. *PREPARATION OF THE VACCINE*

The bacterial strains used for production are cultured separately in suitable media. The toxins and/or cells are treated to render them safe. The vaccine may be adjuvanted.

2-2. *DETOXIFICATION*

A test for detoxification of the dermonecrotic exotoxin of *P. multocida* is carried out immediately after detoxification. The concentration of detoxified exotoxin used in the test is not less than that in the vaccine. The suspension complies with the test if no toxic dermonecrotic exotoxin is detected. The test for detoxification is not required where the vaccine is prepared using a toxin-like protein free from toxic properties, produced by expression of a modified form of the corresponding gene.

2-3. *ANTIGEN CONTENT*

The content of the dermonecrotic exotoxin of *P. multocida* in the detoxified suspension or the toxin-like protein in the harvest is determined by a suitable immunochemical

method (*2.7.1*), such as an enzyme-linked immunosorbent assay, and the value found is used in the formulation of the vaccine. The content of other antigens stated on the label is also determined (*2.7.1*).

2-4. *CHOICE OF VACCINE COMPOSITION*

The strains used for the preparation of the vaccine are shown to be satisfactory with respect to the production of the dermonecrotic exotoxin and the other antigens claimed to be protective. The vaccine is shown to be satisfactory with respect to safety (*5.2.6*) and efficacy (*5.2.7*) for the sows and gilts for which it is intended.

The following tests for production of antigens (section 2-4-1), safety (section 2-4-2) and immunogenicity (section 2-4-3) may be used during the demonstration of safety and efficacy.

2-4-1. **Production of antigens**. The production of antigens claimed to be protective is verified by a suitable bioassay or immunochemical method (*2.7.1*), carried out on the antigens obtained from each of the vaccine strains under the conditions to be used for the production of the vaccine.

2-4-2. **Safety**

2-4-2-1. *Safety in pregnant sows*. Carry out the test for each route and method of administration to be recommended for vaccination using in each case pregnant sows or gilts that do not have antibodies against the components of the vaccine, from a herd or herds where there are no signs of atrophic rhinitis and that have not been vaccinated against atrophic rhinitis. Use a batch containing not less than the maximum potency that may be expected in a batch of vaccine.

Use not fewer than 8 pregnant sows or gilts per group, at the stage or at different stages of pregnancy according to the schedule to be recommended. Administer to each pregnant sow or gilt 1 dose of the vaccine. If the schedule to be recommended requires a 2nd dose, administer another dose after an interval of at least 14 days. Observe the pregnant sows or gilts at least daily until farrowing. Record body temperature the day before vaccination, at vaccination, 2 h, 4 h and 6 h later and then daily for 4 days; note the maximum temperature increase for each pregnant sow or gilt.

The vaccine complies with the test if no pregnant sow or gilt shows abnormal local or systemic reactions or dies from causes attributable to the vaccine, if the average temperature increase for all pregnant sows or gilts does not exceed 1.5 °C and no pregnant sow or gilt shows a rise greater than 2.0 °C, and if no adverse effects on gestation and offspring are noted.

2-4-2-2. *Field studies*. The pigs used for field trials are also used to evaluate safety. Use not fewer than 3 groups each of not fewer than 20 pigs with corresponding groups of not fewer than 10 controls. Examine the injection site for local reactions after vaccination. Record body temperature the day before vaccination, at vaccination, at the time interval after which a rise in temperature, if any, was seen in test 2-4-2-1, and daily during the 2 days following vaccination; note the maximum temperature increase for each pig.

The vaccine complies with the test if no pig shows abnormal local or systemic reactions or dies from causes attributable to the vaccine and if the average temperature increase for all pigs does not exceed 1.5 °C and no pig shows a rise greater than 2.0 °C.

2-4-3. **Immunogenicity**. Each test is carried out for each route and method of administration to be recommended, using in each case pigs that do not have antibodies against the components of the vaccine, that are from a herd or herds where there are no signs of atrophic rhinitis and that have not been vaccinated against atrophic rhinitis. The vaccine administered to each pig is of minimum potency.

2-4-3-1. *Vaccines containing dermonecrotic exotoxin of* P. multocida *(with or without cells of* P. multocida*)*. Use not fewer than 12 breeder pigs. Vaccinate not fewer than 6 randomly chosen pigs at the stage of pregnancy or non-pregnancy and according to the schedule to be recommended. Maintain not fewer than 6 pigs as controls. From birth allow all the piglets from the vaccinated and unvaccinated breeder pigs to feed from their own dam. Constitute from the progeny 2 challenge groups each of not fewer than 30 piglets chosen randomly, taking not fewer than 3 piglets from each litter. On the 2 consecutive days preceding challenge, the mucosa of the nasal cavity of the piglets may be treated by instillation of 0.5 mL of a solution of acetic acid (10 g/L $C_2H_4O_2$) in isotonic buffered saline pH 7.2.

Challenge each piglet at 10 days of age by the intranasal route with a sufficient quantity of a toxigenic strain of *P. multocida*. At the age of 42 days, euthanise the piglets of the 2 groups and dissect the nose of each of them transversally at premolar-1. Examine the ventral and dorsal turbinates and the nasal septum for evidence of atrophy or distortion and grade the observations on the following scales.

Turbinates

0 no atrophy

1 slight atrophy

2 moderate atrophy

3 severe atrophy

4 very severe atrophy with almost complete disappearance of the turbinate

The maximum score is 4 for each turbinate and 16 for the sum of the 2 dorsal and 2 ventral turbinates.

Nasal septum

0 no deviation

1 very slight deviation

2 deviation of the septum

The maximum total score for the turbinates and the nasal septum is 18.

The test is not valid if fewer than 80 per cent of the progeny of each litter of the unvaccinated breeder pigs have a total score of at least 10. The vaccine complies with the test if a significant reduction in the total score has been demonstrated in the group from the vaccinated breeder pigs compared to that from the unvaccinated breeder pigs.

2-4-3-2. *Vaccines containing* P. multocida *dermonecrotic exotoxin (with or without cells of* P. multocida*) and cells and/or antigenic components of* B. bronchiseptica. Use not fewer than 24 breeder pigs. Vaccinate not fewer than 12 randomly chosen pigs at the stage of pregnancy or non-pregnancy and according to the schedule to be recommended. Maintain not fewer than 12 pigs as controls. From birth allow all the piglets from the vaccinated and unvaccinated breeder pigs to feed from their own dam. Using groups of not fewer than 6 pigs, constitute from their progeny 2 challenge groups from vaccinated pigs and 2 groups from control pigs each group consisting of not fewer than 30 piglets chosen randomly, taking not fewer than 3 piglets from each litter. On the 2 consecutive days preceding challenge, the mucosa of the nasal cavity of the piglets may be treated by instillation of 0.5 mL of a solution of acetic acid (10 g/L $C_2H_4O_2$) in isotonic buffered saline pH 7.2. For a group of piglets from not fewer than 6 vaccinated pigs and a group from not fewer than 6 controls, challenge each piglet by the intranasal route at 10 days of age with a sufficient quantity of a toxigenic strain of *P. multocida*. For the other group of piglets from not fewer than 6 vaccinated pigs and the other group from not fewer than 6 controls, challenge each piglet at 7 days of age by the intranasal route with a sufficient quantity of *B. bronchiseptica*. In addition, challenge each piglet at 10 days of age by the intranasal route with a sufficient quantity of a toxigenic strain of *P. multocida*. At the age of 42 days, euthanise the piglets of the 4 groups and dissect the nose of each of them transversally

Vaccines

at premolar-1. Examine the ventral and dorsal turbinates and the nasal septum for evidence of atrophy or distortion and grade the observations on the scale described above.

The test is not valid if fewer than 80 per cent of the progeny of each litter of the unvaccinated breeder pigs have a total score of at least 10. The vaccine complies with the test if a significant reduction in the total score has been demonstrated in the groups from the vaccinated breeder pigs compared to the corresponding group from the unvaccinated breeder pigs.

2-5. *MANUFACTURER'S TESTS*

2-5-1. **Batch potency test**. It is not necessary to carry out the potency test (section 3-4) for each batch of vaccine if it has been carried out using a batch of vaccine with a minimum potency. Where the test is not carried out, an alternative validated method is used, the criteria for acceptance being set with reference to a batch of vaccine that has given satisfactory results in the test described under Potency. The following test may be used.

Use not fewer than 7 pigs not less than 3 weeks old and that do not have antibodies against the components of the vaccine. Vaccinate not fewer than 5 pigs by a recommended route and according to the recommended schedule. Maintain not fewer than 2 pigs of the same origin as controls under the same conditions. Alternatively, if the nature of the antigens allows reproducible results to be obtained, a test in laboratory animals that do not have antibodies against the components of the vaccine may be carried out. To obtain a valid assay, it may be necessary to carry out a test using several groups of animals, each receiving a different quantity of vaccine. For each quantity of vaccine, carry out the test as follows: vaccinate not fewer than 5 animals with a suitable quantity of vaccine. Maintain not fewer than 2 animals of the same species and origin as controls. Where the recommended schedule requires a booster injection to be given, a booster vaccination may also be given in this test provided it has been demonstrated that this will still provide a suitably sensitive test system. At a given interval within the range of 14-21 days after the last administration, collect blood from each animal and prepare serum samples. Use a validated test such as an enzyme-linked immunosorbent assay to measure the antibody response to each of the antigens stated on the label.

The test is not valid if there is a significant antibody titre in the controls. The vaccine complies with the test if the antibody responses of the vaccinated animals are not significantly less than those obtained with a batch of vaccine that has given satisfactory results in the test or tests (as applicable) described under Potency.

Where animals that do not have antibodies against the antigens stated on the label are not available, seropositive animals may be used in the above test. During the development of a test with seropositive animals, particular care will be required during the validation of the test system to establish that the test is suitably sensitive and to specify acceptable pass, fail and retest criteria. It will be necessary to take into account the range of prevaccination antibody titres and to establish the acceptable minimum antibody titre rise after vaccination in relation to these.

2-5-2. **Bacterial endotoxins**. A test for bacterial endotoxins (*2.6.14*) is carried out on the batch or, where the nature of the adjuvant prevents performance of a satisfactory test, on the bulk antigen or the mixture of bulk antigens immediately before addition of the adjuvant. The maximum acceptable amount of bacterial endotoxins is that found for a batch of vaccine shown satisfactory in safety test 2-4-2-1 given under Choice of vaccine composition or in the residual toxicity test described under Batch tests, carried out using 10 pigs. Where the latter test is used, note the maximum temperature increase for each pig; the vaccine complies with the test if the average temperature increase for all pigs does not exceed 1.5 °C. The method chosen for determining the amount of bacterial endotoxin present in the vaccine batch used in the safety test for determining the maximum acceptable level of endotoxin is used subsequently for testing of each batch.

3. BATCH TESTS

3-1. **Identification**. In animals that do not have specific antibodies against the antigens stated on the label, the vaccine stimulates the production of such antibodies.

3-2. **Bacteria and fungi**. The vaccine, including where applicable the diluent supplied for reconstitution, complies with the test for sterility prescribed in the monograph *Vaccines for veterinary use (0062)*.

3-3. **Residual toxicity**. Use not fewer than 2 pigs that do not have antibodies against *P. multocida* and that preferably do not have antibodies against *B. bronchiseptica*. Administer to each pig by a recommended route a double dose of the vaccine. Observe the pigs at least daily for 14 days. Record body temperature the day before vaccination, at vaccination, 2 h, 4 h and 6 h later and then daily for 2 days.

It is recommended to use the mean temperature of the days before administration of the vaccine (e.g. day – 3 to day 0) as the baseline temperature to have clear guidance for evaluation of the test.

The vaccine complies with the test if no pig shows notable signs of disease or dies from causes attributable to the vaccine; a transient temperature increase not exceeding 2.0 °C may occur.

3-4. **Potency**. The vaccine complies with the requirements of the tests mentioned under Immunogenicity (section 2-4-3) when administered by a recommended route and method.

04/2013:2325

RABBIT HAEMORRHAGIC DISEASE VACCINE (INACTIVATED)

Vaccinum morbi haemorrhagici cuniculi inactivatum

1. DEFINITION

Rabbit haemorrhagic disease vaccine (inactivated) is a preparation of a suitable strain of rabbit haemorrhagic disease virus (RHDV), inactivated while maintaining adequate immunogenic properties. This monograph applies to vaccines intended for active immunisation of rabbits.

2. PRODUCTION

2-1. *PREPARATION OF THE VACCINE*

The vaccine virus is grown in rabbits. The rabbits must be healthy, not vaccinated against RHDV, free from antibodies against RHDV, not treated with antibiotics within at least 15 days of their use and from a healthy and monitored breeding unit. A suspension is prepared from a homogenate of suitable internal organs of those rabbits that are euthanised or that succumb to the infection within 120 h of inoculation. The virus in the suspension may be purified and concentrated, and is inactivated by a suitable method.

2-2. *SEED LOTS*

2-2-1. **Extraneous agents**. Each master seed lot complies with the tests for extraneous agents in seed lots prescribed in the monograph *Vaccines for veterinary use (0062)*.

2-3. *CHOICE OF VACCINE COMPOSITION*

The vaccine is shown to be satisfactory with respect to safety (*5.2.6*) and efficacy (*5.2.7*) for the rabbits for which it is intended.

The following tests for safety (section 2-3-1) and immunogenicity (section 2-3-2) may be used during the demonstration of safety and efficacy.

Vaccines

2-3-1. **Safety**

Carry out the test for each route and method of administration to be recommended for vaccination and in rabbits of each category for which the vaccine is intended. Use a batch of vaccine containing not less than the maximum potency that may be expected in a batch of vaccine.

For each test, use not fewer than 8 healthy rabbits from the same stock, not older than the minimum age to be recommended for vaccination and free from antibodies against RHDV. Administer to each rabbit 1 dose of the vaccine. If the schedule to be recommended requires a 2nd dose, administer 1 dose after an interval of at least 14 days. Observe the animals for at least 14 days after the last administration. Record the body temperature the day before vaccination, at vaccination, 4 h after vaccination and then daily for 4 days; note the maximum temperature increase for each animal.

The vaccine complies with the test if no rabbit shows abnormal local or systemic reactions or signs of disease, or dies from causes attributable to the vaccine, the average body temperature increase for all animals does not exceed 1.5 °C, and no animal shows a temperature rise greater than 2.0 °C.

2-3-2. **Immunogenicity**. A test is carried out for each route and method of administration to be recommended for vaccination.

The test is carried out using in each case rabbits not less than 10 weeks old. The vaccine administered to each rabbit is of minimum potency.

Use not fewer than 15 healthy, susceptible rabbits, free from antibodies against RHDV, from the same healthy stock, and reared in suitable isolation conditions to ensure absence of contact with RHDV. Administer 1 dose of vaccine to each of not fewer than 10 of the rabbits according to the instructions for use to be stated on the label. Maintain not fewer than 5 other rabbits as controls. Not less than 7 days after vaccination, challenge each rabbit by a suitable route with a quantity of a virulent strain of RHDV sufficient to cause signs of rabbit haemorrhagic disease (RHD) in a susceptible rabbit. Observe the rabbits for a further 14 days.

The test is not valid if fewer than 80 per cent of control rabbits die with typical signs of RHD within 120 h of challenge.

The vaccine complies with the test if not fewer than 90 per cent of vaccinated rabbits show no signs of RHD.

2-4. *MANUFACTURER'S TESTS*

2-4-1. **Residual live virus**. A test for residual live virus is carried out on the bulk harvest of each batch to confirm inactivation of the RHDV. The test for inactivation is carried out in healthy, susceptible rabbits, not less than 10 weeks old, free from antibodies against RHDV and from the same healthy stock. 5 rabbits are inoculated by a suitable parenteral route (subcutaneous or intramuscular) with at least a 5 mL dose of the suspension. The rabbits are observed for not less than 7 days. At the end of the observation period, the animals are euthanised and liver extracts are tested by a suitable method for freedom from RHDV.

The vaccine complies with the test if no rabbit dies and no RHDV antigen is detected in the livers.

2-4-2. **Batch potency test**. It is not necessary to carry out the potency test (section 3-4) for each batch of the vaccine if it has been carried out using a batch of vaccine with a minimum potency. Where the test is not carried out, an alternative validated method is used, the criteria for acceptance being set with reference to a batch of vaccine that has given satisfactory results in the test described under Potency.

The following method is given as an example. Administer 1 dose of vaccine intramuscularly to each of 5 healthy rabbits, 10 weeks old, free from antibodies against RHDV and from the same healthy stock. Maintain 2 rabbits as unvaccinated controls. Collect serum samples from each rabbit just before administration of the vaccine and after the period defined when testing the reference vaccine; determine the antibody titre of each serum by a suitable immunological method, for example, ELISA. The antibody levels are not significantly lower than those obtained with a batch that has given satisfactory results in the test described under Potency.

The test is not valid if the sera collected from the unvaccinated controls and from the rabbits just before the administration of the vaccine show detectable specific antibodies.

3. BATCH TESTS

3-1. **Identification**. When injected into susceptible animals, the vaccine stimulates the production of specific antibodies against RHDV, detectable by a haemagglutination-inhibition test or enzyme immunoassay.

3-2. **Bacteria and fungi**. The vaccine, including where applicable the diluent supplied for reconstitution, complies with the test for sterility prescribed in the monograph *Vaccines for veterinary use (0062)*.

3-3. **Residual live virus**. Use not fewer than 2 healthy rabbits, not less than 10 weeks old, free from antibodies against RHDV and from the same healthy stock. Administer by a recommended route to each rabbit 2 doses of vaccine. Observe the rabbits for 14 days.

The vaccine complies with the test if no rabbit shows notable signs of disease or dies from causes attributable to the vaccine.

3-4. **Potency**. The vaccine complies with the requirements of the test mentioned under Immunogenicity (section 2-3-2), when administered by a recommended route and method.

04/2013:0451

RABIES VACCINE (INACTIVATED) FOR VETERINARY USE

Vaccinum rabiei inactivatum ad usum veterinarium

1. DEFINITION

Rabies vaccine (inactivated) for veterinary use is a preparation of a suitable strain of fixed rabies virus, inactivated while maintaining adequate immunogenic properties. This monograph applies to vaccines intended for the active immunisation of animals against rabies.

2. PRODUCTION

2-1. *PREPARATION OF THE VACCINE*

The vaccine is prepared from virus grown either in suitable cell lines or in primary cell cultures from healthy animals (*5.2.4*). The virus suspension is harvested on one or more occasions within 28 days of inoculation. Multiple harvests from a single production cell culture may be pooled and considered as a single harvest.

The virus harvest is inactivated. The vaccine may be adjuvanted.

2-2. *SUBSTRATE FOR VIRUS PROPAGATION*

2-2-1. **Cell cultures**. The cell cultures comply with the requirements for cell cultures for production of veterinary vaccines (*5.2.4*).

2-3. *CHOICE OF VACCINE COMPOSITION*

The vaccine virus is shown to be satisfactory with respect to safety (*5.2.6*) and efficacy (*5.2.7*) for the species for which it is intended.

The following tests for safety (section 2-3-1) and immunogenicity (section 2-3-2) may be used during the demonstration of safety and efficacy in cats and dogs.

The suitability of the vaccine with respect to immunogenicity (section 2-3-2) for carnivores (cats and dogs) is demonstrated by direct challenge. For other species, if a challenge test has been carried out for the vaccine in cats or dogs, an indirect test is carried out by determining the antibody level following

Vaccines

vaccination of not fewer than 20 animals according to the schedule to be recommended; the vaccine is satisfactory if, after the period to be claimed for protection, the mean rabies virus antibody level in the serum of the animals is not less than 0.5 IU/mL and if not more than 10 per cent of the animals have an antibody level less than 0.1 IU/mL.

2-3-1. **Safety**. Carry out the test for each route and method of administration to be recommended for vaccination. Use a batch of vaccine containing not less than the maximum potency that may be expected in a batch of vaccine.

For each test, use not fewer than 8 animals of the minimum age to be recommended and that do not have antibodies against rabies virus. Administer to each animal 1 dose of the vaccine. If the schedule to be recommended requires a 2nd dose, administer 1 dose after an interval of at least 14 days. Observe the animals at least daily for at least 14 days after the last administration.

The vaccine complies with the test if no animal shows abnormal local or systemic reactions or dies from causes attributable to the vaccine.

2-3-2. **Immunogenicity**. Each test is carried out for each route and method of administration to be recommended, using in each case animals of the minimum age to be recommended for vaccination. The vaccine administered to each animal is of minimum potency.

Use for the test not fewer than 35 animals. Take a blood sample from each animal and test individually for antibodies against rabies virus to determine susceptibility. Vaccinate not fewer than 25 animals, according to the schedule to be recommended . Maintain not fewer than 10 animals as controls. Observe all the animals for a period equal to the claimed duration of immunity. No animal shows signs of rabies. On the last day of the claimed period for duration of immunity or later, challenge each animal by intramuscular injection with a sufficient quantity of virulent rabies virus of a strain approved by the competent authority. Observe the animals at least daily for 90 days after challenge. Animals that die from causes not attributable to rabies are eliminated. The test is not valid if the number of such deaths reduces the number of vaccinated animals in the test to fewer than 25 and the test is invalid unless at least 8 control animals (or a statistically equivalent number if more than 10 control animals are challenged) show signs of rabies and the presence of rabies virus in their brain is demonstrated by the fluorescent-antibody test or some other suitable method. The vaccine complies with the test if not more than 2 of the 25 vaccinated animals (or a statistically equivalent number if more than 25 vaccinated animals are challenged) show signs of rabies.

2-4. MANUFACTURER'S TESTS

2-4-1. **Residual live virus**. The test for residual live virus is carried out by inoculation of the inactivated virus into the same type of cell culture as that used in the production of the vaccine or a cell culture shown to be at least as sensitive. The quantity of inactivated virus harvest used is equivalent to not less than 25 doses of the vaccine. After incubation for 4 days, a subculture is made using trypsinised cells; after incubation for a further 4 days, the cultures are examined for residual live rabies virus by an immunofluorescence test. The inactivated virus harvest complies with the test if no live virus is detected.

2-4-2. **Antigen content of the harvest**. The content of rabies virus glycoprotein is determined by a suitable immunochemical method (*2.7.1*). The content is within the limits approved for the particular preparation.

2-4-3. **Antigen content of the pooled harvest**. The quantity of rabies virus glycoprotein per dose, determined by a suitable immunochemical method (*2.7.1*) on the pooled harvest immediately before blending, is not significantly lower than that of a batch of vaccine that gave satisfactory results in the test described under Potency.

2-4-4. **Batch potency test**. It is not necessary to carry out the potency test (section 3-4) for each batch of vaccine if it has been carried out using a batch of vaccine with a minimum potency. Where the test is not carried out, an alternative validated method is used, the criteria for acceptance being set with reference to a batch of vaccine that has given satisfactory results in the test described under Potency. In accordance with the provisions of the European Convention for the Protection of Vertebrate Animals Used for Experimental and Other Scientific Purposes, such an alternative validated method should preferably be used for routine testing. The following serological assay has been shown to be suitable[(3)] and may be used provided the test for antigen content of the pooled harvest (section 2-4-3) has been carried out with satisfactory results.

Use groups of not fewer than 8 female mice (strain NMRI), each weighing 18-20 g. Prepare a 1 IU/mL suspension of *rabies vaccine (inactivated) for veterinary use BRP* using phosphate-buffered saline (PBS) for dilution. Vaccines with a minimum potency requirement of 1 IU/mL are used without further dilution. Vaccines with a minimum potency requirement of more than 1 IU/mL are diluted with PBS to contain approximately, but not less than, 1 IU/mL. Administer by the intraperitoneal route to each mouse of one group 0.2 mL of the vaccine, diluted where necessary, and to each mouse of another group 0.2 mL of the suspension of *rabies vaccine (inactivated) for veterinary use BRP*. Take blood samples 14 days after the injection and test the sera individually for rabies antibody using a suitable virus neutralisation test, for example the rapid fluorescent focus inhibition test (RFFIT) described for *Human rabies immunoglobulin (0723)* or a suitable validated modification of the RFFIT[(4)].

The test is not valid if more than 2 mice injected with the suspension of *rabies vaccine (inactivated) for veterinary use BRP* show no antibodies in their serum.

Individual serum titres are determined with an appropriate anti-rabies immunoglobulin reference.

The antibody titre of mice receiving the suspension of *rabies vaccine (inactivated) for veterinary use BRP* is compared to the antibody titre of mice receiving the vaccine using a suitable statistical approach (*5.3*).

The vaccine complies with the test if the antibody titre of mice injected with the vaccine is significantly higher than that of mice injected with the suspension of *rabies vaccine (inactivated) for veterinary use BRP*.

3. BATCH TESTS

3-1. **Identification**. Administered to animals that do not have antibodies against rabies virus, the vaccine stimulates the production of such antibodies.

3-2. **Bacteria and fungi**. The vaccine, including where applicable the diluent supplied for reconstitution, complies with the test for sterility prescribed in the monograph *Vaccines for veterinary use (0062)*.

3-3. **Residual live virus**. Carry out the test using a pool of the contents of 5 containers.

For vaccines which do not contain an adjuvant, carry out a suitable amplification test for residual live virus using the same type of cell culture as that used in the production of the vaccine or a cell culture shown to be at least as sensitive. The vaccine complies with the test if no live virus is detected.

For vaccines that contain an adjuvant, inject intracerebrally into each of not fewer than 10 mice, each weighing 11-15 g, 0.03 mL of a pool of at least 5 times the smallest stated dose. To avoid interference from any antimicrobial preservative

(3) B. Krämer *et al.* Collaborative Study for Validation of a Serological Potency Assay for Rabies Vaccines (inactivated) for Veterinary Use, *Pharmeur Bio Sci Notes* 2010(2):37-55.
(4) B. Krämer *et al.* The rapid fluorescent focus inhibition test is a suitable method for batch potency testing of inactivated rabies vaccine. *Biologicals* 2009;**37**:119-126.

or the adjuvant, the vaccine may be diluted not more than 10 times before injection. In this case or if the vaccine strain is pathogenic only for unweaned mice, carry out the test on mice 1-4 days old. Observe the animals for 21 days. If more than 2 animals die during the first 48 h, repeat the test. The vaccine complies with the test if, from the 3rd to the 21st days following the injection, the animals show no signs of rabies and immunofluorescence tests carried out on the brains of the animals show no indication of the presence of rabies virus.

3-4. **Potency**. The potency of rabies vaccine is determined by comparing the dose necessary to protect mice against the clinical effects of the dose of rabies virus defined below, administered intracerebrally, with the quantity of a reference preparation, calibrated in International Units, necessary to provide the same protection.

The International Unit is the activity of a stated quantity of the International Standard. The equivalence in International Units of the International Standard is stated by the World Health Organization.

Rabies vaccine (inactivated) for veterinary use BRP is calibrated in International Units against the International Standard.

The test described below uses a parallel-line model with at least 3 points for the vaccine to be examined and the reference preparation. Once the analyst has experience with the method for a given vaccine, it is possible to carry out a simplified test using 1 dilution of the vaccine to be examined. Such a test enables the analyst to determine that the vaccine has a potency significantly higher than the required minimum but will not give full information on the validity of each individual potency determination. It allows a considerable reduction in the number of animals required for the test and should be considered by each laboratory in accordance with the provisions of the European Convention for the Protection of Vertebrate Animals Used for Experimental and Other Scientific Purposes.

Selection and distribution of the test animals. Use in the test healthy female mice about 4 weeks old and from the same stock. Distribute the mice into at least 10 groups of not fewer than 10 mice.

Preparation of the challenge suspension. Inoculate a group of mice intracerebrally with the CVS strain of rabies virus and when the mice show signs of rabies, but before they die, euthanise the mice and remove the brains and prepare a homogenate of the brain tissue in a suitable diluent. Separate gross particulate matter by centrifugation and use the supernatant as challenge suspension. Distribute the suspension in small volumes in ampoules, seal and store at a temperature below – 60 °C. Thaw 1 ampoule of the suspension and make serial dilutions in a suitable diluent. Allocate each dilution to a group of mice and inject intracerebrally into each mouse 0.03 mL of the dilution allocated to its group. Observe the animals at least daily for 14 days and record the number in each group that, between the 5th and the 14th days, develop signs of rabies. Calculate the ID_{50} of the undiluted suspension.

Determination of potency of the vaccine to be examined. Prepare at least 3 serial dilutions of the vaccine to be examined and 3 similar dilutions of the reference preparation. Prepare the dilutions such that those containing the largest quantity of vaccine may be expected to protect more than 50 per cent of the animals into which they are injected and those containing the smallest quantities of vaccine may be expected to protect less than 50 per cent of the animals into which they are injected. Allocate each dilution to a different group of mice and inject by the intraperitoneal route into each mouse 0.5 mL of the dilution allocated to its group. 14 days after the injection prepare a suspension of the challenge virus such that, on the basis of the preliminary titration, it contains about 50 ID_{50} in each 0.03 mL. Inject intracerebrally into each vaccinated mouse 0.03 mL of this suspension. Prepare 3 suitable serial dilutions of the challenge suspension. Allocate the challenge suspension and the 3 dilutions one to each of 4 groups of 10 unvaccinated mice and inject intracerebrally into each mouse 0.03 mL of the suspension or one of the dilutions allocated to its group. Observe the animals in each group at least daily for 14 days. The test is not valid if more than 2 mice of any group die within the first 4 days after challenge. Record the numbers in each group that show signs of rabies in the period 5 days to 14 days after challenge.

The test is invalid unless:

- for both the vaccine to be examined and the reference preparation the 50 per cent protective dose lies between the smallest and the largest dose given to the mice;
- the titration of the challenge suspension shows that 0.03 mL of the suspension contained at least 10 ID_{50};
- the confidence limits ($P = 0.95$) are not less than 25 per cent and not more than 400 per cent of the estimated potency; when this validity criteria is not met, the lower limit of the estimated potency must be at least 1 IU in the smallest prescribed dose;
- the statistical analysis shows a significant slope ($P = 0.95$) and no significant deviations from linearity or parallelism of the dose-response lines ($P = 0.99$).

The vaccine complies with the test if the estimated potency is not less than 1 IU in the smallest prescribed dose.

Application of alternative end-points. Once a laboratory has established the above assay for routine use, the lethal end-point is replaced by an observation of clinical signs and application of an end-point earlier than death to reduce animal suffering. The following is given as an example.

The progress of rabies infection in mice following intracerebral injection can be represented by 5 stages defined by typical clinical signs:

Stage 1: ruffled fur, hunched back;

Stage 2: slow movements, loss of alertness (circular movements may also occur);

Stage 3: shaky movements, trembling, convulsions;

Stage 4: signs of paresis or paralysis;

Stage 5: moribund state.

Mice are observed at least twice daily from day 4 after challenge. Clinical signs are recorded using a chart such as that shown in Table 0451.-1. Experience has shown that using stage 3 as an end-point yields assay results equivalent to those found when a lethal end-point is used. This must be verified by each laboratory by scoring a suitable number of assays using both clinical signs and the lethal end-point.

Table 0451.-1. – *Example of a chart used to record clinical signs in the rabies vaccine potency test*

	Days after challenge							
Clinical signs	**4**	**5**	**6**	**7**	**8**	**9**	**10**	**11**
Ruffled fur Hunched back								
Slow movements Loss of alertness Circular movements								
Shaky movements Trembling Convulsions								
Paresis Paralysis								
Moribund state								

4. LABELLING

The label states:

- the type of cell culture used to prepare the vaccine and the species of origin;

– the minimum number of International Units per dose;
– the minimum period for which the vaccine provides protection.

01/2014:0746

RABIES VACCINE (LIVE, ORAL) FOR FOXES AND RACCOON DOGS

Vaccinum rabiei perorale vivum ad vulpem et nyctereutem

1. DEFINITION

Rabies vaccine (live, oral) for foxes (*Vulpes vulpes*) and raccoon dogs (*Nyctereutes procyonoides*) is a preparation of a suitable immunogenic strain of an attenuated rabies virus. The virus strain has one or more stable genetic markers that discriminates the vaccine strain from other rabies virus strains. The vaccine is incorporated in bait in such a manner as to enable the tests prescribed below to be performed aseptically. The bait casing, attractive to the target species, may contain a biomarker (e.g. tetracycline). This monograph applies to vaccines intended for the active immunisation of foxes, or foxes and raccoon dogs against rabies.

2. PRODUCTION

2-1. *PREPARATION OF THE VACCINE*

The vaccine virus is grown in cell cultures. The virus suspension is harvested on one or more occasions within 14 days of inoculation. Multiple harvests from a single cell lot may be pooled and considered as a single harvest. It may be mixed with a suitable stabiliser.

2-2. *SUBSTRATE FOR VIRUS PROPAGATION*

2-2-1. **Cell cultures**. The cell cultures comply with the requirements for cell cultures for production of veterinary vaccines (*5.2.4*); if the cell cultures are of mammalian origin, they are shown to be free from rabies virus.

2-3. *CHOICE OF VACCINE VIRUS*

The vaccine virus is shown to be satisfactory with respect to safety (*5.2.6*) for the target species and the non-target species, and efficacy (*5.2.7*) for the species for which it is intended. The vaccine strain is genetically characterised by gene sequencing. The following tests for safety of the virus strain (section 2-3-1), stability of the genetic marker (section 2-3-2) and immunogenicity (2-3-3) may be used during the demonstration of safety and efficacy.

In natural and experimental conditions, the virus strain does not spread from one animal to another in wild rodents.

2-3-1. **Safety of the virus strain**. Administer the virus strain by the oral route. Use vaccine virus at the least attenuated passage level that will be present in a batch of the vaccine.

For each test performed in the target species (foxes, or foxes and raccoon dogs), use not fewer than 20 animals that do not have antibodies against rabies virus. Administer orally to each animal a quantity of the vaccine virus equivalent to not less than 10 times the maximum virus titre likely to be contained in 1 vaccine bait. Observe the animals at least daily for 180 days.

For each test performed in the non-target species (dogs, cats, and if appropriate, raccoon dogs), use not fewer than 10 animals that do not have antibodies against rabies virus. Administer orally to each animal a quantity of the vaccine virus equivalent to not less than 10 times the maximum virus titre likely to be contained in 1 vaccine bait. Observe the animals at least daily for 180 days.

The vaccine virus complies with the test if no animal shows signs of disease and if the presence of the vaccine virus is not demonstrated in the brain of any animal. The presence of rabies virus in the brain is tested using reference diagnostic tests (immunofluorescence test and cell-culture test).

2-3-2. **Stability of the genetic marker**. Carry out the test using suckling mice that have not been vaccinated against rabies. Passage the vaccine virus sequentially through 5 groups via the intracerebral route.

Inoculate each of the 5 mice of the 1st group with a quantity of the vaccine virus that will allow recovery of virus for the passages described below (e.g. not more than 0.02 mL). When the mice show signs of rabies, but not later than 14 days after inoculation, euthanise the mice and remove the brain of each mouse. Prepare a suspension from the brain of each mouse and pool the samples. Administer not more than 0.02 mL of the pooled samples to each mouse of the next group. Carry out this passage operation not fewer than 4 times; verify the presence of the virus at each passage. If the virus is not found at a passage level, repeat the passage by administration to a group of 10 animals.

Verify the genetic marker in the vaccine virus recovered from the last passage.

The vaccine virus complies with the test if the genetic marker remains stable.

2-3-3. **Immunogenicity**. A test is carried out for the oral route of administration and with the bait to be stated on the label using animals of the target species (foxes, or foxes and raccoon dogs) at least 3 months old. The quantity of vaccine virus to be administered to each fox, or fox and raccoon dog, is not greater than the minimum virus titre to be stated on the label and the virus is at the most attenuated passage level that will be present in a batch of vaccine.

Use for the test not fewer than 35 animals of each target species, that do not have antibodies against rabies virus. In each target species, apply the following protocol, validity criteria and acceptance limits.

Vaccinate not fewer than 25 animals, according to the schedule to be recommended. Maintain not fewer than 10 animals as controls. Observe the animals for 180 days after vaccination. The test is not valid if fewer than 25 vaccinated animals survive after this observation period. Challenge all the animals at least 180 days after vaccination by intramuscular injection of a sufficient quantity of a virulent rabies virus strain approved by the competent authority. Observe the animals at least daily for 90 days after challenge. Animals that die from causes not attributable to rabies are eliminated.

The test is not valid if the number of such deaths reduces the number of vaccinated animals in the test to fewer than 25 and the test is invalid unless at least 9 control animals (or a statistically equivalent number if more than 10 control animals are challenged) show signs of rabies and the presence of rabies virus in their brain is demonstrated by the immunofluorescence test or some other reliable method.

The vaccine virus complies with the test if not more than 2 of 25 vaccinated animals (or a statistically equivalent number if more than 25 vaccinated animals are challenged) show signs of rabies.

2-4. *BAIT STABILITY*

Incubate the bait at 25 °C for 5 days. Titrate the vaccine. The virus titre must be at least the minimum virus titre stated on the label. Heat the bait at 40 °C for 1 h. The bait casing complies with the test if it remains in its original shape and adheres to the vaccine container.

3. BATCH TESTS

3-1. **Identification**

3-1-1. The vaccine virus is identified by a suitable method, e.g. when mixed with a monospecific rabies antiserum, the vaccine is no longer able to infect susceptible cell cultures into which it is inoculated.

3-1-2. A test is carried out to demonstrate the presence of the genetic marker.

3-2. **Bacteria and fungi**. The vaccine complies with the test for sterility prescribed in the monograph *Vaccines for veterinary use (0062)*.

3-3. **Mycoplasmas** (*2.6.7*). The vaccine complies with the test for mycoplasmas.

3-4. **Extraneous agents**

3-4-1. Neutralise the vaccine virus with a suitable monospecific neutralising rabies virus antiserum and inoculate into susceptible cell cultures. The vaccine complies with the test if it no longer provokes cytopathic effects in susceptible cell cultures, and it shows no evidence of haemagglutinating or haemadsorbing agents.

3-4-2. Inoculate 1 in 10 and 1 in 1000 dilutions of the vaccine into susceptible cell cultures. Incubate at 37 °C. After 2, 4 and 6 days, stain the cells with a panel of monoclonal antibodies that do not react with the vaccine strain but that react with other strains of rabies vaccine (for example, street virus, Pasteur strain). The vaccine complies with the test if it shows no evidence of contaminating rabies virus.

3-5. **Virus titre**. Titrate the vaccine virus in suitable cell cultures. The vaccine complies with the test if 1 dose contains not less than the minimum virus titre stated on the label.

3-6. **Potency**. The vaccine complies with the requirements of the test prescribed under Immunogenicity (section 2-3-3) when administered by a recommended route and method. It is not necessary to carry out the potency test for each batch of the vaccine if it has been carried out on a representative batch using a vaccinating dose containing not more than the minimum virus titre stated on the label.

3-7. **Biomarker**. If the bait contains a biomarker, the stability of the biomarker is verified by a suitable method. When tetracycline is used, the vaccine complies with the test if chemical analysis of the bait casing shows less than 30 per cent conversion of the total amount of tetracycline into the epitetracycline isomer.

4. LABELLING

The label states:

- the nature of the genetic marker of the virus strain;
- where applicable, the nature of the biomarker of the bait.

04/2013:1947

SALMONELLA ENTERITIDIS VACCINE (INACTIVATED) FOR CHICKENS

Vaccinum Salmonellae Enteritidis inactivatum ad pullum

1. DEFINITION

Salmonella Enteritidis vaccine (inactivated) for chickens is a preparation of a suitable strain or strains of *Salmonella enterica* Enteritidis, inactivated while maintaining adequate immunogenic properties. This monograph applies to vaccines intended for administration to chickens for reducing *S. enterica* Enteritidis colonisation and faecal excretion of *S. enterica* Enteritidis.

2. PRODUCTION

2-1. *PREPARATION OF THE VACCINE*

The seed material is cultured in a suitable medium; each strain is cultivated separately. During production, various parameters such as growth rate are monitored by suitable methods; the values are within the limits approved for the particular vaccine. Purity of the cultures and identity are verified on the harvest using suitable methods. After cultivation, the bacterial harvests are collected separately, inactivated by a suitable method, and blended. The vaccine may contain adjuvants.

2-2. *CHOICE OF VACCINE COMPOSITION*

The vaccine is shown to be satisfactory with respect to safety (*5.2.6*) and efficacy (*5.2.7*) for the birds for which it is intended. The following tests for safety (section 2-2-1) and immunogenicity (section 2-2-2) may be used during the demonstration of safety and efficacy.

2-2-1. **Safety**. The test is carried out for each route of administration to be recommended for vaccination, using in each case chickens not older than the minimum age to be recommended for vaccination and from a flock free from specified pathogens (SPF) (*5.2.2*). Use a batch of vaccine containing not less than the maximum potency that may be expected in a batch of vaccine.

For each test performed in chickens younger than 3 weeks of age, use not fewer than 10 chickens. For each test performed in chickens older than 3 weeks of age, use not fewer than 8 chickens. Administer by a route and method to be recommended to each chicken 1 dose of the vaccine. If the schedule to be recommended requires a 2nd dose, administer 1 dose to each chicken after an interval of at least 14 days. Observe the chickens at least daily for at least 14 days after the last administration of the vaccine.

The test is not valid if more than 10 per cent of the chickens younger than 3 weeks of age show abnormal signs of disease or die from causes not attributable to the vaccine. For chickens older than 3 weeks of age, the test is not valid if non-specific mortality occurs.

The vaccine complies with the test if no chicken shows abnormal signs of disease or dies from causes attributable to the vaccine.

2-2-2. **Immunogenicity**. A test is carried out for each route and method of administration to be recommended for vaccination. The vaccine administered to each animal is of minimum potency.

Use for the test not fewer than 60 SPF chickens (*5.2.2*) not older than the minimum age to be recommended for vaccination. Vaccinate not fewer than 30 chickens with no more than the minimum recommended number of doses of vaccine. Maintain not fewer than 30 chickens as controls for each group of vaccinates. Challenge both groups, 4 weeks after the last administration of vaccine, by oral administration to each chicken of a sufficient quantity of a strain of *S. enterica* Enteritidis that is able to colonise chickens. Take blood samples from control chickens on the day before challenge. Observe the chickens at least daily for 4 weeks. Take individual fresh faeces samples on day 1 after challenge and at least twice weekly (including day 7) until 14 days after challenge. Test the fresh faeces samples for the presence of *S. enterica* Enteritidis by direct plating. Euthanise all surviving chickens at the end of the observation period, take samples of liver and spleen and test for the presence of *S. enterica* Enteritidis by an appropriate method.

The test is not valid if antibodies against *S. enterica* Enteritidis are found in any control chicken before challenge.

The vaccine complies with the test if:

- the number of *S. enterica* Enteritidis in fresh faeces samples from vaccinated chickens after challenge at the different days of sampling is significantly lower in vaccinates than in controls and remains lower until the end of the test;
- the number of positive samples of liver and spleen is significantly lower in vaccinates than in controls.

2-3. *MANUFACTURER'S TEST*

2-3-1. **Batch potency test**. It is not necessary to carry out the potency test (section 3-3) for each batch of the vaccine if it has been carried out using a batch of vaccine with a minimum potency. Where the test is not carried out, an alternative validated method is used, the criteria for acceptance being set

with reference to a batch of vaccine that has given satisfactory results in the test described under Potency. The following test may be used.

Use not fewer than 15 SPF chickens (*5.2.2*). Maintain not fewer than 5 SPF chickens as controls. Administer to each of 10 chickens 1 dose of vaccine by a recommended route. Where the schedule stated on the label requires a booster injection to be given, a booster vaccination may also be given in this test provided it has been demonstrated that this will still provide a suitably sensitive test system. At a given interval after the last injection, collect blood from each vaccinated and control chicken and prepare serum samples. Measure the titre of antibodies against *S. enterica* Enteritidis in each serum sample using a suitable validated serological method. Calculate the titre for the group of vaccinates.

The test is not valid if specific *S. enterica* Enteritidis antibodies are found in 1 or more sera from control chickens at a given interval after the time of administration of the vaccine in the vaccinated group.

The vaccine complies with the test if the antibody titres of the group of vaccinates at a given interval after each vaccination, where applicable, are not significantly lower than the value obtained with a batch that has given satisfactory results in the test described under Potency (section 3-3).

3. BATCH TESTS

3-1. **Identification**. In animals that do not have antibodies against *S. enterica* Enteritidis, the vaccine stimulates the production of such antibodies.

3-2. **Bacteria and fungi**. The vaccine, including where applicable the diluent supplied for reconstitution, complies with the test for sterility prescribed in the monograph *Vaccines for veterinary use (0062)*.

3-3. **Potency**. The vaccine complies with the requirements of the test mentioned under Immunogenicity (section 2-2-2) when administered by a recommended route and method.

04/2013:2520

SALMONELLA ENTERITIDIS VACCINE (LIVE, ORAL) FOR CHICKENS

Vaccinum Salmonellae Enteritidis vivum perorale ad pullum

1. DEFINITION

Salmonella Enteritidis vaccine (live, oral) for chickens is a preparation of a suitable strain of live *Salmonella enterica* Enteritidis. This monograph applies to vaccines intended for the active immunisation of chickens against colonisation by and faecal excretion of *S. enterica* Enteritidis.

2. PRODUCTION

2-1. *PREPARATION OF THE VACCINE*

The vaccine strain is cultured in a suitable medium. During production, various parameters such as growth rate are monitored by suitable methods; the values are within the limits approved for the particular vaccine. Purity and identity of the cultures are verified on the harvest using a combination of methods such as morphological, serological and biochemical methods and culture on appropriate selective media. Suitable test(s) are conducted to confirm the presence of relevant marker(s). The harvests are shown to be pure and the results obtained from the tests for identity are in accordance with the documented characteristics of the strain.

2-2. *CHOICE OF VACCINE STRAIN*

The vaccine strain is shown to be satisfactory with respect to safety (*5.2.6*) and efficacy (*5.2.7*) for the chickens for which it is intended. During development, the safety of the vaccine for the persons handling the vaccine or vaccinated chickens has to be addressed as well as, in accordance with the requirements of general chapter *5.2.6*, the safety of the spread of the vaccine to other susceptible species. The strain has a stable marker or markers to distinguish it from wild-type strains.

The following tests described under General safety (section 2-2-1-1), Excretion, duration of excretion and survival in the environment (section 2-2-1-2), Spread of the vaccine strain (section 2-2-1-3), Dissemination and survival of the vaccine strain in vaccinated chickens after each vaccination (section 2-2-1-4), Increase in virulence (section 2-2-1-5), Field trials (section 2-2-1-6), and Immunogenicity (sections 2-2-2-1 and 2-2-2-2) may be used during the demonstration of safety and efficacy.

For vaccines intended to prevent and/or reduce colonisation by and faecal excretion of *S. enterica* Enteritidis, the test for immunogenicity (section 2-2-2-1) is suitable to demonstrate that the vaccine is suitably immunogenic.

When the vaccine is recommended for use in laying chickens, the continuing immunogenicity of the vaccine until the end of the laying period has to be demonstrated and the test for immunogenicity at the end of the laying period (section 2-2-2-2) is suitable.

2-2-1. **Safety**. Unless otherwise indicated below, carry out each test by the oral route of administration, using chickens from a flock free from specified pathogens (SPF) (*5.2.2*) not older than the minimum age to be recommended for vaccination and that are free from antibodies against *Salmonella* spp. Where the vaccine is recommended for administration to 1-day-old chickens, the vaccine is administered before food is provided. Use vaccine bacteria at the least attenuated passage level that will be present in a batch of vaccine.

Measures taken to ensure absence of contamination by *Salmonella* spp. from the environment before the start of the test and on a regular ongoing basis are described and justified.

Whenever possible, items taken into the facilities are sterilised.

For re-isolation of the vaccine strain, suitably sensitive validated methods that are optimal for the vaccine strain concerned are used. The presence of relevant markers is confirmed to demonstrate that the organisms isolated are vaccine-derived and not wild-type contaminants.

2-2-1-1. *General safety*. For each test performed in chickens younger than 3 weeks of age, use not fewer than 10 chickens that are free from antibodies against *Salmonella* spp. Administer orally to each chicken a quantity of the vaccine strain equivalent to not less than 10 times the maximum titre(s) likely to be contained in 1 dose of the vaccine. Observe the chickens at least daily for at least 14 days.

The test is not valid if more than 10 per cent of the chickens younger than 3 weeks of age show abnormal signs or die from causes not attributable to the vaccine.

The vaccine complies with the test if no chicken shows notable signs of disease or dies from causes attributable to the vaccine.

2-2-1-2. *Excretion, duration of excretion and survival in the environment*. The same animals can be used for the test for spread of the vaccine strain (section 2-2-1-3) provided they are of the minimum age to be recommended for vaccination. Use for the test not fewer than 10 chickens. Administer orally to each chicken a quantity of the vaccine equivalent to not less than the maximum titre of the strain under study likely to be contained in 1 dose of the vaccine. Samples are collected for re-isolation of vaccine from cloacal swabs from each chicken and floor faeces on days 3, 7, 10 and 14 after vaccination and then weekly until 3 consecutive negative weekly samples are obtained from all vaccinated chickens. Samples are collected for re-isolation of the vaccine strain from the caeca of vaccinates at the end of the test.

The test is not valid if more than 10 per cent of vaccinated chickens show abnormal clinical signs or die from causes not attributable to the vaccine. The results are noted and used to formulate the label statement on the length of time of excretion of the vaccine strain.

2-2-1-3. *Spread of the vaccine strain*. The same animals can be used for the test for excretion, duration of excretion and survival in the environment (section 2-2-1-2). Use for the test not fewer than 10 chickens of the minimum age to be recommended for vaccination. Use 10 chickens as controls.

Administer orally to each chicken a quantity of the vaccine strain equivalent to not less than the maximum titre of the strain likely to be contained in 1 dose of the vaccine. 1 day after vaccination, mix the 10 vaccinates with at least 10 non-vaccinated chickens of the same age and source. Samples are collected for the re-isolation of the vaccine strain from cloacal swabs from each chicken and floor faeces on days 3, 7, 10 and 14 after vaccination and then weekly until 3 consecutive negative weekly samples are obtained from all chickens. Collect samples of the caeca and spleens for re-isolation of the vaccine strain from 10 in-contact control chickens at the end of the test. The results are noted and used to formulate the label statement on the extent to which the vaccine spreads to in-contact non-vaccinated chickens.

2-2-1-4. *Dissemination and survival of the vaccine strain in vaccinated chickens after each vaccination*. Conduct the test after each vaccination as prescribed by the vaccination schedule to be recommended in chickens of each category for which the vaccine is intended with oral administration of the test preparation. Use a sufficient number of chickens to conduct the sampling described below, the number of chickens required being dependent on the number of vaccinations to be recommended, the interval between vaccinations and the length of time chickens are maintained after the last vaccination. Administer to each chicken a quantity of the vaccine strain equivalent to not less than the maximum titre of the strain under study likely to be contained in 1 dose of the vaccine. Collect cloacal swabs from each chicken for re-isolation of the vaccine strain on days 7 and 14 after each vaccination and at later appropriate stages and with sufficient frequency to determine the duration of dissemination.

For example, for broilers, samples are collected from 5 chickens for re-isolation of the vaccine strain on days 7 and 14 after each vaccination and weekly until 8 weeks of age. At the 7- and 14-day sampling points, samples are taken from the liver, caecum and spleen of 5 chickens.

In the case of chickens intended for laying, samples are collected from 5 chickens on days 7 and 14 after each vaccination and weekly until 3 consecutive negative weekly samples are obtained or the time of the next vaccination is reached, whichever is the sooner. At the 7- and 14-day sampling points, samples are taken from the liver, caecum and spleen of 5 chickens. In addition, samples are collected from ovaries and oviducts where dissemination in vaccinated future layers is being investigated.

The test is not valid if more than 10 per cent of vaccinated chickens in any group show abnormal clinical signs or die from causes not attributable to the vaccine. The results are noted and used to formulate the label statement on the length of time the vaccine strain survives in the body and to define a suitable withdrawal period.

2-2-1-5. *Increase in virulence*. Carry out the test according to general chapter *5.2.6* using SPF chickens (*5.2.2*) not older than the minimum age to be recommended for vaccination.

Administer orally to each chicken of the 1st group a quantity of the vaccine strain of the strain under study that will allow recovery of bacteria for the passages described below. 4 to 7 days after administration of the vaccine strain, prepare a suspension from the liver, spleen and caecum of chickens and pool these samples. Administer pooled samples orally to each chicken of the next group. Carry out this passage operation not fewer than 4 times; verify the presence of the bacteria at each passage. If the bacteria are not found at a passage level, repeat the passage by administration to a group of 10 chickens. Any mortalities are investigated for the presence of the vaccine strain and the properties of any re-isolated vaccine strain determined.

Carry out the test for excretion, duration of excretion and survival in the environment (section 2-2-1-2) and, if the last group of birds from which the bacteria was recovered shows evidence of an increase in virulence indicative of reversion during the observation period, carry out the test for general safety (section 2-2-1-1), using the material used for the 1st passage and the bacteria at the last passage level where it was recovered. Test the bacteria recovered for the final passage for the presence and stability of the marker(s).

The vaccine strain complies with the test if no indication of increased virulence of the bacteria recovered for the final passage compared with the material used for the 1st passage is observed and the presence of the marker(s) is confirmed in the bacteria recovered for the final passage and remains identical to the material used for the 1st passage. If the bacteria are not recovered after an initial passage in 5 animals and a subsequent repeat passage in 10 animals, the vaccine also complies with the test.

2-2-1-6. *Field trials*. The chickens used for field trials are also used to evaluate safety. A trial is carried out in each category of chickens for which the vaccine strain is intended, in not fewer than 2 sets of premises. Samples are taken from a significant number of chickens for re-isolation of bacteria to provide information on the persistence, dissemination and spread of the bacteria, which can be used, with the data from the laboratory studies, to formulate the statements on the label. The samples include cloacal swabs, floor faeces, spleen and liver and, in laying chickens, samples of ovaries and oviducts. Environmental samples are also tested at regular intervals.

2-2-2. **Immunogenicity**. The tests described in section 2-2-2-1 and, if appropriate, in section 2-2-2-2 are carried out using chickens not older than the minimum age to be recommended for vaccination and that are free from antibodies against *Salmonella* spp. The quantity of the vaccine strain to be administered orally to each chicken is not greater than the minimum titre to be stated on the label.

Measures taken to ensure absence of contamination by *Salmonella* spp. from the environment before the start of the test and on a regular ongoing basis are described and justified.

Whenever possible, items taken into the facilities are sterilised.

Suitably sensitive validated methods are used for re-isolation of bacteria derived from the challenge and for distinguishing these from the vaccine strain.

2-2-2-1. *Immunogenicity*. Use for the test not fewer than 40 chickens of the same origin and from an SPF flock (*5.2.2*). Vaccinate according to the schedule to be recommended not fewer than 20 chickens with a single dose of vaccine. Maintain not fewer than 20 chickens as controls. Challenge each chicken after 14 days by a suitable route with a sufficient quantity of a virulent strain of *S. enterica* Enteritidis to give a valid test. Collect cloacal swabs from vaccinates and controls on days 3, 5, 7, 10 and 14 post-challenge. Samples of caecum, liver and spleen are collected from 10 chickens of each group on days 7 and 14 post-challenge for re-isolation of challenge bacteria. Collect the same samples of internal organs from any chicken that dies. Examine the samples for the presence of the challenge organisms using a suitable sensitive culture medium and compare results for vaccinates and controls.

The test is not valid if, during the observation period, fewer than 80 per cent of the control chickens die or challenge organisms are re-isolated from fewer than 80 per cent of the control chickens.

The vaccine complies with the test if there is a significant reduction in the total number of cloacal swabs from vaccinates containing challenge organisms compared with the number

from the controls and there is a significant reduction in the number of samples from internal organs from vaccinates containing challenge bacteria compared with the number from the controls.

2-2-2-2. *Immunogenicity at the end of the laying period.* Use for the test not fewer than 40 chickens of the same origin and from an SPF flock (*5.2.2*). Vaccinate not fewer than 20 chickens according to the schedule to be recommended. Maintain not fewer than 20 chickens as controls. At the end of the laying period, take serum samples and cloacal swabs from the chickens and environmental samples from the housing area. Test each serum sample individually for the presence of antibodies to *S. enterica* Enteritidis and each cloacal swab and environmental sample for the presence of *Salmonella* spp. Challenge each chicken by a suitable route with a sufficient quantity of a virulent strain of *S. enterica* Enteritidis to give a valid test. Collect cloacal swabs from vaccinates and controls on days 3, 5, 7, 10 and 14 post-challenge. Samples of caecum, liver, spleen, ovaries and oviducts are collected from 10 chickens of each group for re-isolation of challenge bacteria on days 7 and 14 post-challenge. Collect the same samples of internal organs from any chicken that dies during the observation period. Examine the samples for the presence of the challenge organisms with growth in a suitable medium and compare results for vaccinates and controls.

The test is not valid if, before the challenge, antibodies to *Salmonella* spp. are found in the serum of the controls or *Salmonella* spp. bacteria are isolated from any of the chickens. The test is also not valid if the challenge organisms are re-isolated from fewer than 80 per cent of the control chickens.

The vaccine complies with the test if there is a significant reduction in the number of cloacal swabs from vaccinates containing challenge organisms compared with the number from the controls and there is a significant decrease in the number of samples of internal organs from vaccinates containing challenge bacteria compared with the number from the controls.

3. BATCH TESTS

3-1. **Identification**. The strain present in the vaccine is identified by a combination of methods such as morphological, serological and biochemical methods and culture on appropriate selective media. Suitable test(s) are conducted to confirm the presence of the relevant marker(s).

3-2. **Bacteria and fungi**. Carry out the test by microscopic examination and by inoculation of suitable media, or verify the absence of micro-organisms other than the vaccine strain present in the vaccine as described in the test for sterility prescribed in the monograph *Vaccines for veterinary use (0062)*. The vaccine complies with the test if it does not contain extraneous micro-organisms.

Any diluent supplied for reconstitution of the vaccine complies with the test for sterility prescribed in the monograph *Vaccines for veterinary use (0062)*.

3-3. **Live bacteria**. Titrate the vaccine strain using a suitable medium for the culture of the strain. The vaccine complies with the test if it contains not less than the titre stated on the label.

3-4. **Potency**. The vaccine complies with the requirements of the test prescribed under Immunogenicity (section 2-2-2-1) when administered by a recommended route and method. It is not necessary to carry out the potency test for each batch of the vaccine if it has been carried out on a representative batch using a vaccinating dose containing not more than the minimum titre stated on the label.

4. LABELLING

The label states:

- the nature of the markers allowing the vaccine to be distinguished from wild-type strains;
- the extent to which the vaccine spreads and is transmitted to non-vaccinated chickens and the time over which this could occur;
- the time that the vaccine survives in the body;
- the length of time of excretion and the time that the vaccine survives in the environment;
- the potential for spread to other susceptible species including humans;
- the withdrawal period.

04/2013:2361

SALMONELLA TYPHIMURIUM VACCINE (INACTIVATED) FOR CHICKENS

Vaccinum Salmonellae Typhimurium inactivatum ad pullum

1. DEFINITION

Salmonella Typhimurium vaccine (inactivated) for chickens is a preparation of a suitable strain or strains of *Salmonella enterica* Typhimurium, inactivated while maintaining adequate immunogenic properties. This monograph applies to vaccines intended for administration to chickens for reducing *S. enterica* Typhimurium colonisation and faecal excretion of *S. enterica* Typhimurium.

2. PRODUCTION

2-1. *PREPARATION OF THE VACCINE*

The seed material is cultured in a suitable medium; each strain is cultivated separately. During production, various parameters such as growth rate are monitored by suitable methods; the values are within the limits approved for the particular vaccine. Purity of the cultures and identity are verified on the harvest using suitable methods. After cultivation, the bacterial harvests are collected separately, inactivated by a suitable method, and blended. The vaccine may contain adjuvants.

2-2. *CHOICE OF VACCINE COMPOSITION*

The vaccine is shown to be satisfactory with respect to safety (*5.2.6*) and efficacy (*5.2.7*) for the birds for which it is intended. The following tests for safety (section 2-2-1) and immunogenicity (section 2-2-2) may be used during the demonstration of safety and efficacy.

2-2-1. **Safety**. The test is carried out for each route of administration to be recommended for vaccination, using in each case chickens not older than the minimum age to be recommended for vaccination and from a flock free from specified pathogens (SPF) (*5.2.2*). Use a batch of vaccine containing not less than the maximum potency that may be expected in a batch of vaccine.

For each test performed in chickens younger than 3 weeks of age, use not fewer than 10 chickens. For each test performed in chickens older than 3 weeks of age, use not fewer than 8 chickens. Administer by a route and method to be recommended to each chicken 1 dose of the vaccine. If the schedule to be recommended requires a 2nd dose, administer 1 dose to each chicken after an interval of at least 14 days. Observe the chickens at least daily for at least 14 days after the last administration of the vaccine.

The test is not valid if more than 10 per cent of the chickens younger than 3 weeks of age show abnormal signs of disease or die from causes not attributable to the vaccine. For chickens older than 3 weeks of age, the test is not valid if non-specific mortality occurs.

The vaccine complies with the test if no chicken shows abnormal signs of disease or dies from causes attributable to the vaccine.

Vaccines

2-2-2. **Immunogenicity**. A test is carried out for each route and method of administration to be recommended for vaccination. The vaccine administered to each animal is of minimum potency.

Use for the test not fewer than 60 SPF chickens (*5.2.2*) not older than the minimum age to be recommended for vaccination. Vaccinate not fewer than 30 chickens with no more than the minimum number of doses of vaccine to be recommended. Maintain not fewer than 30 chickens as controls for each group of vaccinates. Challenge both groups, 4 weeks after the last administration of vaccine, by oral administration to each chicken of a sufficient quantity of a strain of *S. enterica* Typhimurium that is able to colonise chickens. Take blood samples from control chickens on the day before challenge. Observe the chickens at least daily for 4 weeks. Take individual fresh faeces samples on day 1 after challenge and at least twice weekly (including day 7) until 14 days after challenge. Test the fresh faeces samples for the presence of *S. enterica* Typhimurium by direct plating. Euthanise all surviving chickens at the end of the observation period, take samples of liver and spleen and test for the presence of *S. enterica* Typhimurium by an appropriate method.

The test is not valid if antibodies against *S. enterica* Typhimurium are found in any control chicken before challenge.

The vaccine complies with the test if:

- the number of *S. enterica* Typhimurium in fresh faeces samples from vaccinated chickens after challenge at the different days of sampling is significantly lower in vaccinates than in controls and remains lower until the end of the test;
- the number of positive samples of liver and spleen is significantly lower in vaccinates than in controls.

2-3. *MANUFACTURER'S TEST*

2-3-1. **Batch potency test**. It is not necessary to carry out the potency test (section 3-3) for each batch of the vaccine if it has been carried out using a batch of vaccine with a minimum potency. Where the test is not carried out, an alternative validated method is used, the criteria for acceptance being set with reference to a batch of vaccine that has given satisfactory results in the test described under Potency. The following test may be used.

Use not fewer than 15 SPF chickens (*5.2.2*). Maintain not fewer than 5 SPF chickens as controls. Administer to each of 10 chickens 1 dose of vaccine by a recommended route. Where the schedule stated on the label requires a booster injection to be given, a booster vaccination may also be given in this test provided it has been demonstrated that this will still provide a suitably sensitive test system. At a given interval after the last injection, collect blood from each vaccinated and control chicken and prepare serum samples. Measure the titre of antibodies against *S. enterica* Typhimurium in each serum sample using a suitable validated serological method. Calculate the titre for the group of vaccinates.

The test is not valid if specific *S. enterica* Typhimurium antibodies are found in 1 or more sera from control chickens at a given interval after the time of administration of the vaccine in the vaccinated group.

The vaccine complies with the test if the antibody titres of the group of vaccinates at a given interval after each vaccination, where applicable, are not significantly lower than the value obtained with a batch that has given satisfactory results in the test described under Potency (section 3-3).

3. BATCH TESTS

3-1. **Identification**. In animals that do not have antibodies against *S. enterica* Typhimurium, the vaccine stimulates the production of such antibodies.

3-2. **Bacteria and fungi**. The vaccine, including where applicable the diluent supplied for reconstitution, complies with the test for sterility prescribed in the monograph *Vaccines for veterinary use (0062)*.

3-3. **Potency**. The vaccine complies with the requirements of the test mentioned under Immunogenicity (section 2-2-2) when administered by a recommended route and method.

04/2013:2521

SALMONELLA TYPHIMURIUM VACCINE (LIVE, ORAL) FOR CHICKENS

Vaccinum Salmonellae Typhimurium vivum perorale ad pullum

1. DEFINITION

Salmonella Typhimurium vaccine (live, oral) for chickens is a preparation of a suitable strain of live *Salmonella enterica* Typhimurium. This monograph applies to vaccines intended for the active immunisation of chickens against colonisation by and faecal excretion of *S. enterica* Typhimurium.

2. PRODUCTION

2-1. *PREPARATION OF THE VACCINE*

The vaccine strain is cultured in a suitable medium. During production, various parameters such as growth rate are monitored by suitable methods; the values are within the limits approved for the particular vaccine. Purity and identity of the cultures are verified on the harvest using a combination of methods such as morphological, serological and biochemical methods and culture on appropriate selective media. Suitable test(s) are conducted to confirm the presence of relevant marker(s). The harvests are shown to be pure and the results obtained from the tests for identity are in accordance with the documented characteristics of the strain.

2-2. *CHOICE OF VACCINE STRAIN*

The vaccine strain is shown to be satisfactory with respect to safety (*5.2.6*) and efficacy (*5.2.7*) for the chickens for which it is intended. During development, the safety of the vaccine for the persons handling the vaccine or vaccinated chickens has to be addressed as well as, in accordance with the requirements of general chapter *5.2.6*, the safety of the spread of the vaccine to other susceptible species. The strain has a stable marker or markers to distinguish it from wild-type strains.

The following tests described under General safety (section 2-2-1-1), Excretion, duration of excretion and survival in the environment (section 2-2-1-2), Spread of the vaccine strain (section 2-2-1-3), Dissemination and survival of the vaccine strain in vaccinated chickens after each vaccination (section 2-2-1-4), Increase in virulence (section 2-2-1-5), Field trials (section 2-2-1-6), Immunogenicity (sections 2-2-2-1 and 2-2-2-2) may be used during the demonstration of safety and efficacy.

For vaccines intended to prevent and/or reduce colonisation by and faecal excretion of *S. enterica* Typhimurium, the test for immunogenicity (section 2-2-2-1) is suitable to demonstrate that the vaccine is suitably immunogenic.

When the vaccine is recommended for use in laying chickens, the continuing immunogenicity of the vaccine until the end of the laying period has to be demonstrated and the test for immunogenicity at the end of the laying period (section 2-2-2-2) is suitable.

2-2-1. **Safety**. Unless otherwise indicated below, carry out each test by the oral route of administration, using chickens from a flock free from specified pathogens (SPF) (*5.2.2*) not older than the minimum age to be recommended for vaccination and that are free from antibodies against *Salmonella* spp.

Where the vaccine is recommended for administration to 1-day-old chickens, the vaccine is administered before food is provided. Use vaccine bacteria at the least attenuated passage level that will be present in a batch of vaccine.

Measures taken to ensure absence of contamination by *Salmonella* spp. from the environment before the start of the test and on a regular ongoing basis are described and justified.

Whenever possible, items taken into the facilities are sterilised.

For re-isolation of the vaccine strain, suitably sensitive validated methods that are optimal for the vaccine strain concerned are used. The presence of relevant markers is confirmed to demonstrate that the organisms isolated are vaccine-derived and not wild-type contaminants.

2-2-1-1. *General safety*. For each test performed in chickens younger than 3 weeks of age, use not fewer than 10 chickens that are free from antibodies against *Salmonella* spp. Administer orally to each chicken a quantity of the vaccine strain equivalent to not less than 10 times the maximum titre(s) likely to be contained in 1 dose of the vaccine. Observe the chickens at least daily for at least 14 days.

The test is not valid if more than 10 per cent of the chickens younger than 3 weeks of age show abnormal signs or die from causes not attributable to the vaccine.

The vaccine complies with the test if no chicken shows abnormal signs of disease or dies from causes attributable to the vaccine.

2-2-1-2. *Excretion, duration of excretion and survival in the environment*. The same animals can be used for the test for spread of the vaccine strain (section 2-2-1-3) provided they are of the minimum age to be recommended for vaccination. Use for the test not fewer than 10 chickens. Administer orally to each chicken a quantity of the vaccine equivalent to not less than the maximum titre of the strain under study likely to be contained in 1 dose of the vaccine. Samples are collected for reisolation of vaccine from cloacal swabs from each chicken and floor faeces on days 3, 7, 10 and 14 after vaccination and then weekly until 3 consecutive negative weekly samples are obtained from all vaccinated chickens. Samples are collected for re-isolation of the vaccine strain from the caeca of vaccinates at the end of the test.

The test is not valid if more than 10 per cent of vaccinated chickens show abnormal clinical signs or die from causes not attributable to the vaccine. The results are noted and used to formulate the label statement on the length of time of excretion of the vaccine strain.

2-2-1-3. *Spread of the vaccine strain*. The same animals can be used for the test for excretion, duration of excretion and survival in the environment (section 2-2-1-2). Use for the test not fewer than 10 chickens of the minimum age to be recommended for vaccination. Use 10 chickens as controls. Administer orally to each chicken a quantity of the vaccine strain equivalent to not less than the maximum titre of the strain likely to be contained in 1 dose of the vaccine. 1 day after vaccination, mix the 10 vaccinates with at least 10 non-vaccinated chickens of the same age and source. Samples are collected for the re-isolation of the vaccine strain from cloacal swabs from each chicken and floor faeces on days 3, 7, 10 and 14 after vaccination and then weekly until 3 consecutive negative weekly samples are obtained from all chickens. Collect samples of the caeca and spleens for re-isolation of the vaccine strain from 10 in-contact control chickens at the end of the test. The results are noted and used to formulate the label statement on the extent to which the vaccine spreads to in-contact non-vaccinated chickens.

2-2-1-4. *Dissemination and survival of the vaccine strain in vaccinated chickens after each vaccination*. Conduct the test after each vaccination as prescribed by the vaccination schedule to be recommended in chickens of each category for which the vaccine is intended with oral administration of the test preparation. Use a sufficient number of chickens to conduct the sampling described below, the number of chickens required being dependent on the number of vaccinations recommended, the interval between vaccinations and the length of time chickens are maintained after the last vaccination. Administer to each chicken a quantity of the vaccine strain equivalent to not less than the maximum titre of the strain under study likely to be contained in 1 dose of the vaccine. Collect cloacal swabs from each chicken for re-isolation of vaccinal bacteria on days 7 and 14 after each vaccination and at later appropriate stages and with sufficient frequency to determine the duration of dissemination.

For example, for broilers, samples are collected from 5 chickens for re-isolation of the vaccine strain on days 7 and 14 after each vaccination and weekly until 8 weeks of age. At the 7- and 14-day sampling points, samples are taken from the liver, caecum and spleen of 5 chickens.

In the case of chickens intended for laying, samples are collected from 5 chickens on days 7 and 14 after each vaccination and weekly until 3 consecutive negative weekly samples are obtained or the time of the next vaccination is reached, whichever is the sooner. At the 7- and 14- day sampling points, samples are taken from the liver, caecum and spleen of 5 chickens. In addition, samples are collected from ovaries and oviducts where dissemination in vaccinated future layers is being investigated.

The test is not valid if more than 10 per cent of vaccinated chickens in any group show abnormal clinical signs or die from causes not attributable to the vaccine. The results are noted and used to formulate the label statement on the length of time the vaccine strain survives in the body and to define a suitable withdrawal period.

2-2-1-5. *Increase in virulence*. Carry out the test according to general chapter *5.2.6* using SPF chickens (*5.2.2*) not older than the minimum age to be recommended for vaccination.

Administer orally to each chicken of the 1st group a quantity of the vaccine strain under study that will allow recovery of bacteria for the passages described below. 4 to 7 days after administration of the vaccine strain, prepare a suspension from the liver, spleen and caecum of chickens and pool these samples. Administer pooled samples orally to each chicken of the next group. Carry out this passage operation not fewer than 4 times; verify the presence of the bacteria at each passage. If the bacteria are not found at a passage level, repeat the passage by administration to a group of 10 chickens. Any mortalities are investigated for the presence of the vaccine strain and the properties of any re-isolated vaccine strain determined.

Carry out the test for excretion, duration of excretion and survival in the environment (section 2-2-1-2) and, if the last group of birds from which the bacteria was recovered shows evidence of an increase in virulence indicative of reversion during the observation period, carry out the test for general safety (section 2-2-1-1), using the material used for the 1st passage and the bacteria at the last passage level where it was recovered. Test the bacteria recovered for the final passage for the presence and stability of the marker(s).

The vaccine strain complies with the test if no indication of increased virulence of the bacteria recovered for the final passage compared with the material used for the 1st passage is observed and the presence of the marker(s) is confirmed in the bacteria recovered for the final passage and remains identical to the material used for the 1st passage. If the bacteria are not recovered after an initial passage in 5 animals and a subsequent repeat passage in 10 animals, the vaccine also complies with the test.

2-2-1-6. *Field trials*. The chickens used for field trials are also used to evaluate safety. A trial is carried out in each category of chickens for which the vaccine strain is intended, in not fewer than 2 sets of premises. Samples are taken from a significant number of chickens for re-isolation of bacteria to provide information on the persistence, dissemination and spread of the bacteria, which can be used, with the data from the

laboratory studies, to formulate the statements on the label. The samples include cloacal swabs, floor faeces, spleen and liver and, in laying chickens, samples of ovaries and oviducts. Environmental samples are also tested at regular intervals.

2-2-2. **Immunogenicity**. The tests described in section 2-2-2-1 and, if appropriate, in section 2-2-2-2, are carried out using chickens not older than the minimum age to be recommended for vaccination and that are free from antibodies against *Salmonella* spp. The quantity of the vaccine strain to be administered orally to each chicken is not greater than the minimum titre to be stated on the label.

Measures taken to ensure absence of contamination by *Salmonella* spp. from the environment before the start of the test and on a regular ongoing basis are described and justified.

Suitably sensitive validated methods are used for re-isolation of bacteria derived from the challenge and for distinguishing these from the vaccine strain.

2-2-2-1. *Immunogenicity*. Use for the test not fewer than 40 chickens of the same origin and from an SPF flock (*5.2.2*). Vaccinate according to the schedule to be recommended not fewer than 20 chickens with a single dose of vaccine. Maintain not fewer than 20 chickens as controls. Challenge each chicken after 14 days by a suitable route with a sufficient quantity of a virulent strain of *S. enterica* Typhimurium to give a valid test. Collect cloacal swabs from vaccinates and controls on days 3, 5, 7, 10 and 14 post-challenge. Samples of caecum, liver and spleen are collected from 10 chickens of each group on days 7 and 14 post-challenge for re-isolation of challenge bacteria. Collect the same samples of internal organs from any chicken that dies. Examine the samples for the presence of the challenge organisms using a suitable sensitive culture medium and compare results for vaccinates and controls.

The test is not valid if, during the observation period, fewer than 80 per cent of the control chickens die or challenge organisms are re-isolated from fewer than 80 per cent of the control chickens.

The vaccine complies with the test if there is a significant reduction in the number of cloacal swabs from vaccinates containing challenge organisms compared with the number from the controls and there is a significant reduction in the number of samples from internal organs from vaccinates containing challenge bacteria compared with the number from the controls.

2-2-2-2. *Immunogenicity at the end of the laying period*. Use for the test not fewer than 40 chickens of the same origin and from an SPF flock (*5.2.2*). Vaccinate not fewer than 20 chickens according to the schedule to be recommended. Maintain not fewer than 20 chickens as controls. At the end of the laying period, take serum samples and cloacal swabs from the chickens and environmental samples from the housing area. Test each serum sample individually for the presence of antibodies to *S. enterica* Typhimurium and each cloacal swab and fresh environmental sample for the presence of *Salmonella* spp. Challenge each chicken by a suitable route with a sufficient quantity of a virulent strain of *S. enterica* Typhimurium to give a valid test. Collect cloacal swabs from vaccinates and controls on days 3, 5, 7, 10 and 14 post-challenge. Samples of caecum, liver, spleen, ovaries and oviducts are collected from 10 chickens of each group for re-isolation of challenge bacteria on days 7 and 14 post-challenge. Collect the same samples of internal organs from any chicken that dies during the observation period. Examine the samples for the presence of the challenge organisms with growth in a suitable medium and compare results for vaccinates and controls.

The test is not valid if, before the challenge, antibodies to *Salmonella* spp. are found in the serum of the controls or *Salmonella* spp. bacteria are isolated from any of the chickens. The test is also not valid if the challenge organisms are re-isolated from fewer than 80 per cent of the control chickens.

The vaccine complies with the test if there is a significant reduction in the number of cloacal swabs from vaccinates containing challenge organisms compared with the number from the controls and there is a significant decrease in the number of samples of internal organs from vaccinates containing challenge bacteria compared with the number from the controls.

3. BATCH TESTS

3-1. **Identification**. The strain present in the vaccine is identified by a combination of methods such as morphological, serological and biochemical methods and culture on appropriate selective media. Suitable test(s) are conducted to confirm the presence of the relevant marker(s).

3-2. **Bacteria and fungi**. Carry out the test by microscopic examination and by inoculation of suitable media, or verify the absence of micro-organisms other than the vaccine strain present in the vaccine as described in the test for sterility prescribed in the monograph *Vaccines for veterinary use (0062)*. The vaccine complies with the test if it does not contain extraneous micro-organisms.

Any diluent supplied for reconstitution of the vaccine complies with the test for sterility prescribed in the monograph *Vaccines for veterinary use (0062)*.

3-3. **Live bacteria**. Titrate the vaccine strain using a suitable medium for the culture of the strain. The vaccine complies with the test if it contains not less than the titre stated on the label.

3-4. **Potency**. The vaccine complies with the requirements of the test prescribed under Immunogenicity (section 2-2-2-1) when administered by a recommended route and method. It is not necessary to carry out the potency test for each batch of the vaccine if it has been carried out on a representative batch using a vaccinating dose containing not more than the minimum titre stated on the label.

4. LABELLING

The label states:

- the nature of the markers allowing the vaccine to be distinguished from wild-type strains;
- the extent to which the vaccine spreads and is transmitted to non-vaccinated chickens and the time over which this could occur;
- the time that the vaccine survives in the body;
- the length of time of excretion and the time that the vaccine survives in the environment;
- the potential for spread to other susceptible species including humans;
- the withdrawal period.

04/2013:0064

SWINE ERYSIPELAS VACCINE (INACTIVATED)

Vaccinum erysipelatis suillae inactivatum

1. DEFINITION

Swine erysipelas vaccine (inactivated) is a preparation of one or more suitable strains of *Erysipelothrix rhusiopathiae*, inactivated while maintaining adequate immunogenic properties. This monograph applies to vaccines intended for the active immunisation of pigs against swine erysipelas.

2. PRODUCTION

The vaccine may be adjuvanted.

2-1. *CHOICE OF VACCINE COMPOSITION*

The vaccine is shown to be satisfactory with respect to safety (*5.2.6*) and efficacy (*5.2.7*) for the pigs for which it is intended.

The following test for safety (section 2-1-1) and immunogenicity (section 2-1-2) may be used during the demonstration of safety and efficacy.

2-1-1. **Safety**. Carry out the test for each route and method of administration to be recommended for vaccination and where applicable, in pigs of each category for which the vaccine is intended, using in each case pigs not older than the minimum age to be recommended for vaccination. Use a batch of vaccine containing not less than the maximum potency that may be expected in a batch of vaccine.

For each test, use not fewer than 8 pigs that do not have antibodies against swine erysipelas. Administer to each pig 1 dose of the vaccine. If the schedule to be recommended requires a 2nd dose, administer another dose after an interval of at least 14 days. Observe the pigs at least daily until at least 14 days after the last administration. Record body temperatures the day before each vaccination, at vaccination, 2 h, 4 h and 6 h later and daily for 4 days; note the maximum temperature increase for each pig.

The vaccine complies with the test if no pig shows abnormal local or systemic reactions or signs of disease, or dies from causes attributable to the vaccine, if the average body temperature increase for all pigs does not exceed 1.5 °C, and if no pig shows a rise greater than 2.0 °C.

2-1-2. **Immunogenicity**. The test described below is suitable to demonstrate immunogenicity of the vaccine with respect to *E. rhusiopathiae* serotypes 1 and 2. If claims are made concerning another serotype, then a further test to demonstrate immunogenicity against this serotype is necessary.

If the vaccine contains more than 1 serotype, a test for 2 serotypes may be carried out on a single group by injecting each challenge serotype on different flanks of the pigs. Validation and acceptance criteria are applied separately to the respective injection sites. If the vaccine contains more than 1 serotype, the immunogenicity test may also be carried out using a separate group for each serotype.

A test is carried out for each route and method of administration to be recommended, using in each case pigs not less than 12 weeks old and weighing not less than 20 kg. The vaccine administered to each pig is of minimum potency.

For each test, use not fewer than 15 pigs that do not have antibodies against swine erysipelas. Divide the pigs into 2 groups. Vaccinate a group of not fewer than 10 pigs according to the schedule to be recommended. Maintain a group of not fewer than 5 pigs as controls. Challenge each pig 3 weeks after vaccination by the intradermal route by separate injections of 0.1 mL of a virulent strain of each of serotype 1 and serotype 2 of *E. rhusiopathiae*. Observe the pigs at least daily for 7 days.

The test is not valid if fewer than 80 per cent of control pigs show typical signs of disease, i.e. diamond skin lesions at the injection sites. The vaccine complies with the test if not fewer than 90 per cent of the vaccinated pigs remain free from diamond skin lesions at the injection site.

Swine erysipelas bacteria serotype 1 BRP and *swine erysipelas bacteria serotype 2 BRP* are suitable for use as challenge strains.

2-2. *MANUFACTURER'S TESTS*

2-2-1. **Batch potency test**. It is not necessary to carry out the potency test (section 3-3) for each batch of vaccine if it has been carried out using a batch of vaccine with a minimum potency. Where the test is not carried out, an alternative validated method is used, the criteria for acceptance being set with reference to a batch of vaccine that has given satisfactory results in the test described under Potency. The following test may be used.

Use 10 mice of a suitable strain (for example, NMRI) weighing 17-20 g, from a uniform stock and that do not have antibodies against swine erysipelas. Vaccinate each mouse by the subcutaneous route with a suitable dose (usually 1/10 of the pig dose). At a given interval (for example, 21-28 days), depending on the vaccine to be examined, bleed the mice under anaesthesia. Pool the sera, using an equal volume from each mouse. Determine the level of antibodies by a suitable immunochemical method (*2.7.1*), for example, enzyme-linked immunosorbent assay with *erysipelas ELISA coating antigen BRP*. The vaccine complies with the test if the antibody level is not significantly less than that obtained with a batch that has given satisfactory results in the test described under Potency.

3. BATCH TESTS

3-1. **Identification**. Injected into animals that do not have antibodies against *E. rhusiopathiae*, the vaccine stimulates the production of such antibodies.

3-2. **Bacteria and fungi**. The vaccine, including where applicable the diluent supplied for reconstitution, complies with the test for sterility prescribed in the monograph *Vaccines for veterinary use (0062)*.

3-3. **Potency**. The vaccine complies with the requirements of the tests mentioned under Immunogenicity (section 2-1-2) when administered by a recommended route and method.

04/2013:0065

SWINE-FEVER VACCINE (LIVE, PREPARED IN CELL CULTURES), CLASSICAL

Vaccinum pestis classicae suillae vivum ex cellulis

1. DEFINITION

Classical swine-fever vaccine (live, prepared in cell cultures) is a preparation obtained from a strain of classical swine-fever virus that has lost its pathogenicity for the pig by *in vivo* and/or *in vitro* passage and has been adapted to growth in cell cultures.

2. PRODUCTION

2-1. *PREPARATION OF THE VACCINE*

The vaccine virus is grown in cell cultures.

2-2. *SUBSTRATE FOR VIRUS PROPAGATION*

Cell cultures. Cell cultures comply with the requirements for cell cultures for production of veterinary vaccines (*5.2.4*).

2-3. *CHOICE OF VACCINE VIRUS*

The vaccine virus is shown to be satisfactory with respect to safety (*5.2.6*) and efficacy (*5.2.7*) for the swine for which it is intended.

The following tests described under Safety test in piglets (section 2-3-1), Safety test in pregnant sows and test for transplacental transmission (section 2-3-2), Non-transmissibility (section 2-3-3), Increase in virulence (section 2-3-4) and Immunogenicity (section 2-3-5) may be used during the demonstration of safety and immunogenicity.

2-3-1. **Safety test in piglets**. Carry out the test for each route to be recommended using in each case piglets not older than the minimum age to be recommended for vaccination. Use vaccine virus at the least attenuated passage level that will be present in a batch of the vaccine.

Use not fewer than 8 healthy piglets that do not have antibodies against pestiviruses. Administer to not fewer than 8 piglets a quantity of the vaccine virus equivalent to not less than 10 times the maximum virus titre likely to be contained in 1 dose of the vaccine. Observe the piglets at least daily for at least 14 days. The body temperature of each vaccinated piglet is measured on at least the 3 days preceding administration of the vaccine, at the time of administration, 4 h after and then daily for at least 14 days. The vaccine complies with the test

if the average body temperature increase for all piglets does not exceed 1.5 °C, no piglet shows a temperature rise greater than 1.5 °C for a period exceeding 3 days, and no piglet shows notable signs of disease or dies from causes attributable to the vaccine.

2-3-2. **Safety test in pregnant sows and test for transplacental transmission**. Carry out the test by a route to be recommended using not fewer than 8 healthy sows or gilts of the same age and origin, between the 55th and 80th days of gestation, and that do not have antibodies against pestiviruses. Use vaccine virus at the least attenuated passage level that will be present in a batch of the vaccine.

Administer to not fewer than 8 sows or gilts a quantity of the vaccine virus equivalent to not less than the maximum virus titre likely to be contained in 1 dose of the vaccine. Record the body temperature on at least the 3 days preceding administration of the vaccine, at the time of administration, 4 h after and then daily for at least 15 days. Observe until farrowing.

Carry out tests for serum antibodies against classical swine-fever virus. No antibodies against classical swine-fever virus are found in sera taken from the newborn piglets before ingestion of colostrum. The test is not valid if the vaccinated sows do not seroconvert. The vaccine virus complies with the test if no abnormalities in the gestation or in the piglets are noted, no sow or gilt shows a temperature rise greater than 1.5 °C for a period exceeding 5 days, and no sow or gilt shows notable signs of disease or dies from causes attributable to the vaccine.

2-3-3. **Non-transmissibility**. Keep together for the test not fewer than 12 healthy piglets, 6-10 weeks old and of the same origin, and that do not have antibodies against pestiviruses. Use vaccine virus at the least attenuated passage level that will be present between the master seed lot and a batch of the vaccine. Administer by a route to be recommended to not fewer than 6 piglets a quantity of the vaccine virus equivalent to not less than the maximum virus titre likely to be contained in 1 dose of the vaccine. Maintain not fewer than 6 piglets as contact controls. The mixing of vaccinated piglets and contact piglets is done 24 h after vaccination.

After 45 days, euthanise all piglets. Carry out appropriate tests on the piglets to detect antibodies to classical swine-fever. Carry out appropriate tests on the control piglets to detect classical swine-fever virus in the tonsils. The vaccine complies with the test if antibodies are found in all vaccinated piglets and if no antibodies and no virus are found in the control piglets.

2-3-4. **Increase in virulence**. Carry out the test according to chapter *5.2.6. Evaluation of safety of veterinary vaccines and immunosera*, using piglets 6-10 weeks old that do not have antibodies against pestiviruses. If the properties of the vaccine virus allow sequential passage through 5 groups via natural spreading, this method may be used, otherwise passage as described below is carried out.

Administer to each piglet of the 1st group by a route to be recommended a quantity of the vaccine virus equivalent to not less than the maximum virus titre likely to be contained in 1 dose of the vaccine. Collect an appropriate quantity of blood from each piglet daily between day 2 and day 7 after administration of the vaccine virus, and pool the samples taken on the same day. Administer 2 mL of the pooled blood with the highest virus titre by a route to be recommended to each piglet of the next group. Carry out this passage operation not fewer than 4 times, verifying the presence of the virus at each passage. If no virus is found, repeat the test once. If virus is found, carry out a 2nd series of passages by administering 2 mL of positive blood by a route to be recommended to each piglet of a group of 10 animals.

If the 5th group of animals shows no evidence of an increase in virulence indicative of reversion during the observation period, further testing is not required. Otherwise, carry out an additional safety test and compare the clinical signs and any relevant parameters in a group of at least 8 animals receiving the material used for the 1st passage and another similar group receiving the virus at the final passage level.

The vaccine virus complies with the test if no indication of increasing virulence of the virus recovered for the final passage compared with the material used for the 1st passage is observed. If virus is not recovered after an initial passage in 2 animals and a subsequent repeat passage in 10 animals, the vaccine virus also complies with the test.

2-3-5. **Immunogenicity**

2-3-5-1. *Protective dose*. The efficacy of the vaccine is expressed by the number of 50 per cent protective doses (PD_{50}) for pigs contained in the vaccinal dose as indicated on the label. The vaccine contains at least 100 PD_{50} per dose.

Use 1 or more groups of piglets aged 6-10 weeks and that do not have antibodies against pestiviruses, and use an additional group of piglets of the same age and origin as controls. Each group of piglets is vaccinated with 1 dilution of the vaccine dose. 14 days after the single injection of vaccine, challenge the piglets by a suitable route with a suitable strain of virulent virus and a dose that kills not fewer than 50 per cent of the non-vaccinated piglets in less than 21 days. Observe the piglets for 21 days and record the body temperature 3 days before challenge and daily after challenge for 21 days. The PD_{50} is calculated by the usual statistical methods (for example, *5.3*), taking into account the surviving piglets that have no clinical signs of swine fever, including cutaneous lesions or an increase in body temperature.

The test is not valid if fewer than 50 per cent of the control piglets display typical signs of serious infection with swine-fever virus, including cutaneous lesions, or die, and if fewer than 100 per cent of the control piglets show clinical signs of disease within the 21 days following challenge. The vaccine complies with the test if the minimum dose stated on the label corresponds to not less than 100 PD_{50}.

2-3-5-2. *Protection against transplacental infection*. Use at least 8 sows that do not have antibodies against pestiviruses, randomly allocated to either the vaccine group (n = 6) or the control group (n = 2).

Between the 40th and 50th day of gestation, all sows allocated to the vaccine group are vaccinated once with 1 dose of vaccine containing not more than the minimum titre stated on the label. On day 60 of gestation, all sows are challenged by a route to be recommended with a suitable strain of virulent virus. Just before farrowing and about 5-6 weeks after challenge, the sows are euthanised and their foetuses are examined for classical swine-fever virus. Serum samples from sows and foetuses are tested for the presence of antibodies against classical swine-fever virus. Isolation of classical swine-fever virus is carried out from blood of the sows (collected 7 and 9 days after challenge and at euthanasia), and from homogenised organ material (spleen, kidneys, lymph nodes) of the foetuses.

The test is not valid if one or more of the vaccinated sows do not seroconvert after the vaccination and the control sows do not seroconvert after the challenge, or if no virus is found in more than 50 per cent of the foetuses from the control sows (excluding mummified foetuses).

The vaccine complies with the test if no virus is found in the blood of vaccinated sows and in foetuses from the vaccinated sows, and no antibodies against classical swine-fever virus are found in the serum of the foetuses from the vaccinated sows.

3. BATCH TESTS

3-1. **Identification**

Specific classical swine-fever monoclonal antibodies are used to identify the vaccinal strain.

3-2. **Bacteria and fungi**. The vaccine, including where applicable, the diluent supplied for reconstitution, complies with the test for sterility prescribed in the monograph *Vaccines for veterinary use (0062)*.

3-3. **Mycoplasmas** (*2.6.7*). The vaccine complies with the test for mycoplasmas.

3-4. **Extraneous agents**. Neutralise the vaccine virus using monoclonal antibodies to the vaccine virus. Inoculate into cell cultures known to be sensitive to viruses pathogenic for pigs and to pestiviruses. Maintain these cultures for not less than 14 days and carry out at least 3 passages during this period.

The vaccine complies with the test if no cytopathic effect is produced and if the cells show no evidence of the presence of haemadsorbing agents.

Use monoclonal antibodies that can identify possible contamination with pestiviruses. No virus is detected by an appropriate method.

3-5. **Virus titre**. Titrate the vaccine virus in suitable cell cultures (*5.2.4*). The vaccine complies with the test if 1 dose contains not less than the minimum virus titre stated on the label.

3-6. **Potency**. The vaccine complies with the requirements of the test prescribed under Immunogenicity (section 2-3-5) when administered by a recommended route and method. It is not necessary to carry out the potency test for each batch of the vaccine if it has been carried out on a representative batch using a vaccinating dose containing not more than the minimum virus titre stated on the label.

04/2013:0697

TETANUS VACCINE FOR VETERINARY USE

Vaccinum tetani ad usum veterinarium

1. DEFINITION

Tetanus vaccine for veterinary use is a preparation of the neurotoxin of *Clostridium tetani* inactivated to eliminate its toxicity while maintaining adequate immunogenic properties. The vaccine may be used to induce active and/or passive immunity.

2. PRODUCTION

2-1. *PREPARATION OF THE VACCINE*

C. tetani used for production is grown in an appropriate liquid medium. The toxin is purified and then detoxified or it may be detoxified before purification. The antigenic purity is determined in Lf units of tetanus toxoid per milligram of protein and shown to be not less than the value approved for the particular product.

2-2. *CHOICE OF VACCINE COMPOSITION*

The vaccine is shown to be satisfactory with respect to safety (*5.2.6*) and efficacy (*5.2.7*) for the animals for which it is intended. The following tests for production of antigens (section 2-2-1), safety (section 2-2-2) and immunogenicity (section 2-2-3) may be used during demonstration of safety and efficacy.

The *C. tetani* strain used in the preparation of the vaccine is shown to be satisfactory with respect to the production of the neurotoxin.

2-2-1. **Production of antigens**. The production of the neurotoxin of *C. tetani* is verified by a suitable immunochemical method (*2.7.1*) carried out on the neurotoxin obtained from the vaccine strain under the conditions used for the production of the vaccine.

2-2-2. **Safety**. Carry out the test for each route and method of administration to be recommended for vaccination and where applicable, in animals of each category for which the vaccine is intended, using in each case animals not older than the minimum age to be recommended for vaccination and of the most sensitive category for the species. Use a batch of vaccine containing not less than the maximum potency that may be expected in a batch of vaccine.

For each test use not fewer than 8 animals, free from antitoxic antibodies. Administer to each animal 1 dose of vaccine. If the schedule to be recommended requires a 2nd dose, administer another dose after an interval of at least 14 days. Observe the animals at least daily until at least 14 days after the last administration.

The vaccine complies with the test if no animal shows abnormal local or systemic reactions or dies from causes attributable to the vaccine. If the test is carried out in pregnant animals, no adverse effects on gestation or the offspring are noted.

2-2-3. **Immunogenicity**

2-2-3-1. *Immunogenicity test in the target species*

It shall be demonstrated for each target species that the vaccine, when administered according to the schedule to be recommended and by the route to be recommended, stimulates an immune response (for example, induction of antitoxic antibodies or induction of protective levels of antitoxic antibodies) consistent with the claims made for the product.

2-2-3-2. *Immunogenicity test in guinea-pigs*

Administer 1 dose of vaccine by the subcutaneous route to each of at least 5 guinea-pigs that do not have antibodies against the neurotoxin of *C. tetani*. After 28 days, administer again to each guinea-pig 1 dose by the subcutaneous route. 14 days after the 2nd dose, collect blood from each guinea-pig and prepare serum samples. Determine for each serum the titre of antibodies against the neurotoxin of *C. tetani* using a suitable immunochemical method (*2.7.1*) such as a toxin-binding-inhibition test (ToBI test) and a homologous reference serum. Determine the average antibody titre of the serum samples.

Clostridium tetani guinea-pig antiserum for vaccines for veterinary use BRP is suitable for use as a reference serum.

Tetanus vaccine intended for use in animals other than horses complies with the test if the average antibody titre is not less than 7.5 IU/mL.

Tetanus vaccine intended for use in horses complies with the test if the average antibody titre is not less than 30 IU/mL.

For tetanus vaccine presented as a combined vaccine for use in animals other than horses, the above test may be carried out in susceptible rabbits instead of guinea-pigs. The vaccine complies with the test if the average antibody titre of the sera of the vaccinated rabbits is not less than 2.5 IU/mL.

Clostridia (multicomponent) rabbit antiserum BRP and *Clostridium tetani rabbit antiserum BRP* are suitable for use as reference sera.

2-3. *MANUFACTURER'S TESTS*

2-3-1. **Absence of toxin and irreversibility of toxoid**. Carry out a test for reversion to toxicity on the detoxified harvest using 2 groups of 5 guinea-pigs, each weighing 350-450 g; if the vaccine is adsorbed, carry out the test with the shortest practical time interval before adsorption. Prepare a dilution of the detoxified harvest so that the guinea-pigs each receive 10 times the amount of toxoid (measured in Lf units) that will be present in a dose of vaccine. Divide the dilution into 2 equal parts. Keep 1 part at 5 ± 3 °C and the other at 37 °C for 6 weeks. Attribute each dilution to a separate group of guinea-pigs and inject into each guinea-pig the dilution attributed to its group. Observe the animals at least daily for 21 days. The toxoid complies with the test if no guinea-pig shows signs of disease or dies from causes attributable to the neurotoxin of *C. tetani*.

2-3-2. **Batch potency test**. It is not necessary to carry out the potency test (section 3-4) for each batch of vaccine if it has been carried out using a batch of vaccine with a minimum potency.

Where the test described under Potency is used as the batch potency test, the vaccine complies with the test if the antibody titre in International Units is not less than that found for a batch of vaccine shown to be satisfactory with respect to immunogenicity in the target species.

3. BATCH TESTS

3-1. **Identification**

If the nature of the adjuvant allows it, carry out test A. Otherwise carry out test B.

A. Dissolve in the vaccine sufficient *sodium citrate R* to give a 100 g/L solution. Maintain the solution at 37 °C for about 16 h and centrifuge until a clear supernatant is obtained. The supernatant reacts with a suitable tetanus antitoxin, giving a precipitate.

B. When injected into animals that do not have antibodies against the neurotoxin of *C. tetani*, the vaccine stimulates the production of such antibodies.

3-2. **Bacteria and fungi**. The vaccine, including where applicable the diluent supplied for reconstitution, complies with the test for sterility prescribed in the monograph *Vaccines for veterinary use (0062)*.

3-3. **Residual toxicity**. Administer 5 mL of the vaccine by the subcutaneous route, as 2 equal divided doses at separate sites, into each of 5 healthy guinea-pigs, each weighing 350-450 g, that have not previously been treated with any material that will interfere with the test. The vaccine complies with the test if no animal shows notable signs of disease or dies from causes attributable to the vaccine. If within 21 days of the injection any of the animals shows signs of or dies from tetanus, the vaccine does not comply with the test. If more than 1 animal dies from non-specific causes, repeat the test. If any animal dies in the 2nd test, the vaccine does not comply with the test.

3-4. **Potency**. The vaccine complies with the requirements of the test mentioned under Immunogenicity (section 2-2-3-2).

04/2013:2461

TURKEY INFECTIOUS RHINOTRACHEITIS VACCINE (LIVE)

Vaccinum rhinotracheitidis infectivae vivum ad meleagrem

1. DEFINITION

Turkey infectious rhinotracheitis vaccine (live) is a preparation of a suitable strain of turkey rhinotracheitis virus. This monograph applies to vaccines intended for administration to turkeys for active immunisation against turkey infectious rhinotracheitis.

2. PRODUCTION

2-1. *PREPARATION OF THE VACCINE*

The vaccine virus is grown in cell cultures.

2-2. *SUBSTRATE FOR VIRUS PROPAGATION*

2-2-1. **Cell cultures**. The vaccine virus is grown in cell cultures that comply with the requirements for cell cultures for production of veterinary vaccines (*5.2.4*).

2-3. *SEED LOTS*

2-3-1. **Extraneous agents**. The master seed lot complies with the tests for extraneous agents in seed lots (*2.6.24*). In these tests on the master seed lot, the organisms used are not more than 5 passages from the master seed lot at the start of the test.

2-4. *CHOICE OF VACCINE VIRUS*

The vaccine virus shall be shown to be satisfactory with respect to safety (*5.2.6*) and efficacy (*5.2.7*) for the turkeys for which it is intended.

The following tests for safety (section 2-4-1), increase in virulence (section 2-4-2) and immunogenicity (section 2-4-3) may be used during the demonstration of safety and efficacy.

2-4-1. **Safety**

Safety for the respiratory tract. Carry out the test using turkeys not older than the minimum age to be recommended for vaccination and free from antibodies against turkey rhinotracheitis virus. Use vaccine virus at the least attenuated passage level that will be present in a batch of vaccine.

For each test performed in turkeys younger than 3 weeks of age, use not fewer than 10 turkeys. For each test performed in turkeys older than 3 weeks of age, use not fewer than 8 turkeys. Administer to each turkey, by the oculonasal route, a quantity of the vaccine virus equivalent to not less than 10 times the maximum virus titre likely to be contained in 1 dose of the vaccine. Observe the turkeys at least daily for at least 14 days and monitor clinical signs individually by a suitable scoring system. Mortality should be taken into account when calculating clinical scores. Record the death of any turkey and check for lesions of the respiratory tract.

The test is not valid if more than 10 per cent of the turkeys younger than 3 weeks of age show abnormal signs of disease or die from causes not attributable to the vaccine virus. For turkeys older than 3 weeks of age, the test is not valid if non-specific mortality occurs.

The vaccine virus complies with the test if no vaccinated turkey shows notable signs of disease or dies from causes attributable to the vaccine virus.

The clinical scores are used in the test described under 2-4-2.

2-4-2. **Increase in virulence**. Carry out the test according to general chapter *5.2.6* using turkeys younger than 3 weeks of age and free from antibodies against turkey rhinotracheitis virus. If the properties of the vaccine virus allow sequential passage through 5 groups via natural spreading, this method may be used, otherwise, passage as described below is carried out.

Administer to each turkey of the 1st group, by the oculonasal route, a quantity of the vaccine virus that will allow recovery of virus for the passages described below. 2-6 days after administration of the vaccine virus, prepare a suspension from the mucosa of the turbinates or the upper trachea, or from an oro-pharyngal or tracheal swab from not less than 5 inoculated turkeys and pool these samples. Administer 0.1 mL of the pooled samples by the oculonasal route to each turkey of the next group. Carry out this passage operation not fewer than 4 times; verify the presence of the virus at each passage. If the virus is not found at a passage level, repeat the passage by administration to a group of 10 turkeys.

If the 5th group of turkeys shows no evidence of an increase in virulence during the observation period, further testing is not required. Otherwise, carry out an additional safety test for the respiratory tract and compare the clinical signs and any relevant parameters in a group of at least 10 turkeys receiving the material used for the 1st passage and another similar group receiving the virus at the final passage level.

The vaccine virus complies with the test if no indication of an increased virulence of the virus at the final passage level compared with the material used for the 1st passage is observed or a slight increase in virulence of the virus at the final passage level may be observed for a vaccine which complies with the safety test (section 2-4-1). If virus is not recovered after an initial passage in 5 turkeys and a subsequent repeat passage in 10 turkeys, the vaccine virus also complies with the test.

2-4-3. **Immunogenicity**. A test is carried out for each route and method of administration to be recommended using turkeys not older than the minimum age to be recommended

for vaccination and that are free from antibodies against turkey rhinotracheitis virus. The quantity of vaccine virus to be administered to each turkey is not greater than the minimum virus titre to be stated on the label and the virus is at the most attenuated passage level that will be present in a batch of the vaccine.

Clinical protection against virulent challenge. Use not fewer than 30 turkeys of the same origin and free from antibodies against turkey rhinotracheitis virus. Vaccinate by a route to be recommended not fewer than 20 turkeys according to the schedule to be recommended. Maintain not fewer than 10 turkeys as controls. Challenge each turkey after 21 days by the oculonasal route with a sufficient quantity of a suitable strain of virulent turkey rhinotracheitis virus. Observe the turkeys at least daily for 10 days and monitor clinical signs individually. Record the death of any turkey and check for lesions of the respiratory tract.

The test is not valid if one or more of the following applies:

- fewer than 80 per cent of the unvaccinated turkeys show typical signs of respiratory disease following challenge with the virulent turkey rhinotracheitis virus;
- during the period between vaccination and challenge, more than 10 per cent of vaccinated or control turkeys show abnormal clinical signs or die from causes not attributable to the vaccine.

The vaccine virus complies with the test if during the observation period after challenge not fewer than 90 per cent of the vaccinated turkeys survive and show no typical clinical signs or lesions of an infection with turkey rhinotracheitis virus.

3. BATCH TESTS

3-1. **Identification**. The vaccine, diluted if necessary and mixed with turkey rhinotracheitis virus antiserum specific for the virus subgroup, no longer infects susceptible cell cultures (*5.2.4*) into which it is inoculated. The vaccine may also be identified using appropriate molecular biology techniques (for example RT-PCR).

3-2. **Bacteria and fungi**. Vaccines intended for administration by injection comply with the test for sterility prescribed in the monograph *Vaccines for veterinary use (0062)*.

Any diluent supplied for reconstitution of the vaccine complies with the test for sterility prescribed in the monograph *Vaccines for veterinary use (0062)*.

3-3. **Mycoplasmas**. The vaccine complies with the test for mycoplasmas (*2.6.7*).

3-4. **Extraneous agents**. The vaccine complies with the tests for extraneous agents in batches of finished product (*2.6.25*).

3-5. **Virus titre**. Titrate the vaccine virus by inoculation into suitable cell cultures (*5.2.4*). The vaccine complies with the test if 1 dose contains not less than the minimum titre of vaccine virus stated on the label.

3-6. **Potency**. The vaccine complies with the requirements of the test prescribed under Immunogenicity (section 2-4-3) when administered according to the recommended schedule by a recommended route and method. It is not necessary to carry out the potency test for each batch of the vaccine if it has been carried out on a representative batch using a vaccinating dose containing not more than the minimum virus titre stated on the label.

04/2013:1580

VIBRIOSIS (COLD-WATER) VACCINE (INACTIVATED) FOR SALMONIDS

Vaccinum vibriosidis aquae frigidae inactivatum ad salmonidas

1. DEFINITION

Cold-water vibriosis vaccine (inactivated) for salmonids is prepared from cultures of one or more suitable strains of *Vibrio salmonicida*, inactivated while maintaining adequate immunogenic properties. This monograph applies to vaccines intended for administration by injection or immersion for the active immunisation of salmonids against cold-water vibriosis.

2. PRODUCTION

2-1. *PREPARATION OF THE VACCINE*

The strains of *V. salmonicida* are cultured and harvested separately. The harvests are inactivated by a suitable method. They may be purified and concentrated. Whole or disrupted cells may be used and the vaccine may contain extracellular products of the bacterium released into the growth medium.

2-2. *CHOICE OF VACCINE COMPOSITION*

The strain or strains of *V. salmonicida* used are shown to be suitable with respect to production of antigens of assumed protective importance. The vaccine is shown to be satisfactory with respect to safety (*5.2.6*) and efficacy (*5.2.7*) in the species of fish for which it is intended.

The following tests for safety (section 2-2-1) and immunogenicity (section 2-2-2) may be used during the demonstration of safety and efficacy.

2-2-1. **Safety**

2-2-1-1. *Laboratory tests*. Safety is tested using test 2-2-1-1-1, test 2-2-1-1-2, or both, depending on the recommendations for use.

Carry out the test in each species of fish for which the vaccine is intended, using fish of the minimum body mass to be recommended for vaccination. Use a batch of vaccine containing not less than the maximum potency that may be expected in a batch of vaccine. The test is carried out in the conditions to be recommended for use of the vaccine with a water temperature not less than 10 °C.

2-2-1-1-1. *Vaccines intended for administration by injection*. Use not fewer than 50 fish from a population that does not have specific antibodies against *V. salmonicida* and has not been vaccinated against or exposed to cold-water vibriosis. Administer to each fish by the intraperitoneal route 1 dose of the vaccine. Observe the fish at least daily for 21 days.

The test is not valid if more than 6 per cent of the fish die from causes not attributable to the vaccine. The vaccine complies with the test if no fish shows abnormal local or systemic reactions or dies from causes attributable to the vaccine.

2-2-1-1-2. *Vaccines intended for administration by immersion*. Use not fewer than 50 fish from a population that does not have specific antibodies against *V. salmonicida* and has not been vaccinated against or exposed to cold-water vibriosis. Prepare an immersion bath at twice the concentration to be recommended. Bathe the fish for twice the time to be recommended. Observe the fish at least daily for 21 days.

The test is not valid if more than 6 per cent of the fish die from causes not attributable to the vaccine. The vaccine complies with the test if no fish shows abnormal local or systemic reactions or dies from causes attributable to the vaccine.

2-2-1-2. *Field studies*. Safety is demonstrated in addition in field trials by administering the dose to be recommended to a sufficient number of fish distributed in not fewer than 2 sets of premises.

The vaccine complies with the test if no fish shows abnormal reactions or dies from causes attributable to the vaccine.

2-2-2. **Immunogenicity**. Carry out a separate test for each fish species and each strain included in the vaccine, according to a protocol defining water source, water flow, temperature limits, and preparation of a standardised challenge. Each test is carried out for each route and method of administration to be recommended. The vaccine administered to each fish is of minimum potency.

Use for the test not fewer than 60 fish of the minimum body mass to be recommended for vaccination, from a population that does not have specific antibodies against *V. salmonicida* and has not been vaccinated against or exposed to cold-water vibriosis. Vaccinate not fewer than 30 fish according to the instructions for use. Perform mock vaccination on a control group of not fewer than 30 fish; mark vaccinated and control fish for identification. Keep all the fish in the same tank or mix equal numbers of controls and vaccinates in each tank if more than 1 tank is used. Where justified and when fish cannot be marked, non-marked fish may be used. Vaccinates and controls may then be kept in the same tank but physically separated (for example by fishing nets). Challenge each fish at a fixed interval after vaccination, corresponding to the onset of immunity claimed, by a suitable route, with a sufficient quantity of a culture of *V. salmonicida* whose virulence has been verified. Observe the fish at least daily until at least 60 per cent specific mortality is reached in the control group. Plot for both vaccinates and controls a curve of specific mortality against time from challenge and determine by interpolation the time corresponding to 60 per cent specific mortality in controls.

The test is not valid if the specific mortality is less than 60 per cent in the control group 21 days after the 1st death in the fish. Read from the curve for vaccinates the mortality (*M*) at the time corresponding to 60 per cent mortality in controls. Calculate the relative percentage survival (RPS) using the following expression:

$$\left(1 - \frac{M}{60}\right) \times 100$$

The vaccine complies with the test if the RPS is not less than 60 per cent for vaccines administered by immersion and 90 per cent for vaccines administered by injection.

2-3. *MANUFACTURER'S TESTS*

2-3-1. **Batch potency test**. The potency test (section 3-3) may be carried out for each batch of vaccine using fish of one of the species for which the vaccine is intended. Where the test is not carried out, an alternative validated method based on antibody response may be used, the criteria for acceptance being set with reference to a batch of vaccine that has given satisfactory results in the test described under Potency. The following test may be used.

Use not fewer than 35 fish from a population that does not have specific antibodies against *V. salmonicida* and that are within specified limits for body mass. Carry out the test at a defined temperature. Inject into each of not fewer than 25 fish 1 dose of vaccine, according to the instructions for use. Perform mock vaccination on a control group of not fewer than 10 fish. Collect blood samples at a defined time after vaccination. Determine for each sample the level of specific antibodies against *V. salmonicida* by a suitable immunochemical method (*2.7.1*). The test is not valid if the control group shows antibodies against *V. salmonicida*. The vaccine complies with the test if the mean level of antibodies in the vaccinates is not significantly lower than that found for a batch that gave satisfactory results in the test described under Potency.

3. BATCH TESTS

3-1. **Identification**. When injected into fish that do not have specific antibodies against *V. salmonicida*, the vaccine stimulates the production of such antibodies.

3-2. **Bacteria and fungi**. The vaccine, including where applicable the diluent supplied for reconstitution, complies with the test for sterility prescribed in the monograph *Vaccines for veterinary use (0062)*.

3-3. **Potency**. The vaccine complies with the requirements of the test mentioned under Immunogenicity (section 2-2-2) when administered by a recommended route and method.

4. LABELLING

The label states information on the time needed for development of immunity after vaccination under the range of conditions corresponding to the recommended use.

04/2013:1581

VIBRIOSIS VACCINE (INACTIVATED) FOR SALMONIDS

Vaccinum vibriosidis inactivatum ad salmonidas

1. DEFINITION

Vibriosis vaccine (inactivated) for salmonids is prepared from cultures of one or more suitable strains or serovars of *Listonella anguillarum (Vibrio anguillarum)*, inactivated while maintaining adequate immunogenic properties; the vaccine may also include *Vibrio ordalii*. This monograph applies to vaccines intended for administration by injection or immersion for the active immunisation of salmonids against vibriosis.

2. PRODUCTION

2-1. *PREPARATION OF THE VACCINE*

The strains of *L. anguillarum* and *V. ordalii* are cultured and harvested separately. The harvests are inactivated by a suitable method. They may be purified and concentrated. Whole or disrupted cells may be used and the vaccine may contain extracellular products of the bacterium released into the growth medium.

2-2. *CHOICE OF VACCINE COMPOSITION*

The strains of *L. anguillarum* and *V. ordalii* used are shown to be suitable with respect to production of antigens of assumed protective importance. The vaccine is shown to be satisfactory with respect to safety (*5.2.6*) and efficacy (*5.2.7*) in the species of fish for which it is intended.

The following tests for safety (section 2-2-1) and immunogenicity (section 2-2-2) may be used during the demonstration of safety and efficacy.

2-2-1. **Safety**

2-2-1-1. *Laboratory tests*. Safety is tested using test 2-2-1-1-1, test 2-2-1-1-2, or both, depending on the recommendations for use.

Carry out the test in each species of fish for which the vaccine is intended, using fish of the minimum body mass to be recommended for vaccination. Use a batch of vaccine containing not less than the maximum potency that may be expected in a batch of vaccine. The test is carried out in the conditions to be recommended for use of the vaccine with a water temperature not less than 10 °C.

2-2-1-1-1. *Vaccines intended for administration by injection*. Use not fewer than 50 fish from a population that does not have specific antibodies against *L. anguillarum* or where applicable *V. ordalii* and has not been vaccinated against

or exposed to vibriosis. Administer to each fish by the intraperitoneal route 1 dose of the vaccine. Observe the fish at least daily for 21 days.

The test is not valid if more than 6 per cent of the fish die from causes not attributable to the vaccine. The vaccine complies with the test if no fish shows abnormal local or systemic reactions or dies from causes attributable to the vaccine.

2-2-1-1-2. *Vaccines intended for administration by immersion*. Use not fewer than 50 fish from a population that does not have specific antibodies against *L. anguillarum* or where applicable *V. ordalii* and has not been vaccinated against or exposed to vibriosis. Prepare an immersion bath at twice the concentration to be recommended. Bathe the fish for twice the time to be recommended. Observe the fish at least daily for 21 days.

The test is not valid if more than 6 per cent of the fish die from causes not attributable to the vaccine. The vaccine complies with the test if no fish shows abnormal local or systemic reactions or dies from causes attributable to the vaccine.

2-2-1-2. *Field studies*. Safety is demonstrated in addition in field trials by administering the dose to be recommended to a sufficient number of fish distributed in not fewer than 2 sets of premises.

The vaccine complies with the test if no fish shows abnormal reactions or dies from causes attributable to the vaccine.

2-2-2. **Immunogenicity**. Carry out a separate test for each fish species and each serovar included in the vaccine, according to a protocol defining water source, water flow and temperature limits, and preparation of a standardised challenge. Each test is carried out for each route and method of administration to be recommended. The vaccine administered to each fish is of minimum potency.

Use for the test not fewer than 60 fish of the minimum body mass to be recommended for vaccination, from a population that does not have specific antibodies against *L. anguillarum* or where applicable *V. ordalii* and has not been vaccinated against or exposed to vibriosis. Vaccinate not fewer than 30 fish according to the instructions for use. Perform mock vaccination on a control group of not fewer than 30 fish; mark vaccinated and control fish for identification. Keep all the fish in the same tank or mix equal numbers of controls and vaccinates in each tank if more than 1 tank is used. Where justified and when fish cannot be marked, non-marked fish may be used. Vaccinates and controls may then be kept in the same tank but physically separated (for example by fishing nets). Challenge each fish at a fixed interval after vaccination, corresponding to the onset of immunity claimed, by a suitable route with a sufficient quantity of cultures of *L. anguillarum* or *V. ordalii* whose virulence has been verified. Observe the fish at least daily until at least 60 per cent specific mortality is reached in the control group. Plot for both vaccinates and controls a curve of specific mortality against time from challenge and determine by interpolation the time corresponding to 60 per cent specific mortality in controls.

The test is not valid if the specific mortality is less than 60 per cent in the control group 21 days after the 1st death in the fish. Read from the curve for vaccinates the mortality (M) at the time corresponding to 60 per cent mortality in controls. Calculate the relative percentage survival (RPS) using the following expression:

$$\left(1 - \frac{M}{60}\right) \times 100$$

The vaccine complies with the test if the RPS is not less than 60 per cent for vaccines administered by immersion and 75 per cent for vaccines administered by injection.

2-3. *MANUFACTURER'S TESTS*

2-3-1. **Batch potency test**. The potency test (section 3-3) may be carried out for each batch of vaccine, using fish of one of the species for which the vaccine is intended. Where the test is not carried out, an alternative validated method based on antibody response may be used, the criteria for acceptance being set with reference to a batch of vaccine that has given satisfactory results in the test described under Potency. The following test may be used.

Use not fewer than 35 fish from a population that does not have specific antibodies against *L. anguillarum* included in the vaccine and where applicable against *V. ordalii*, and that are within specified limits for body mass. Carry out the test at a defined temperature. Inject into each of not fewer than 25 fish 1 dose of vaccine, according to the instructions for use. Perform mock vaccination on a control group of not fewer than 10 fish. Collect blood samples at a defined time after vaccination. Determine for each sample the level of specific antibodies against *L. anguillarum* included in the vaccine and where applicable against *V. ordalii*, by a suitable immunochemical method (*2.7.1*). The test is not valid if the control group shows antibodies against *L. anguillarum* or, where applicable, against *V. ordalii*. The vaccine complies with the test if the mean level of antibodies in the vaccinates is not significantly lower than that found for a batch that gave satisfactory results in the test described under Potency.

3. BATCH TESTS

3-1. **Identification**. When injected into fish that do not have specific antibodies against *L. anguillarum* and, where applicable, *V. ordalii*, the vaccine stimulates the production of such antibodies.

3-2. **Bacteria and fungi**. The vaccine, including where applicable the diluent supplied for reconstitution, complies with the test for sterility prescribed in the monograph *Vaccines for veterinary use (0062)*.

3-3. **Potency**. The vaccine complies with the requirements of the test mentioned under Immunogenicity (section 2-2-2) when administered by a recommended route and method.

4. LABELLING

The label states information on the time needed for the development of immunity after vaccination under the range of conditions corresponding to the recommended use.

04/2013:1950

YERSINIOSIS VACCINE (INACTIVATED) FOR SALMONIDS

Vaccinum yersiniosidis inactivatum ad salmonidas

1. DEFINITION

Yersiniosis vaccine (inactivated) for salmonids is prepared from cultures of serovars 1 or 2 of *Yersinia ruckeri*, inactivated while maintaining adequate immunogenic properties. This monograph applies to vaccines intended for administration by injection or immersion for the active immunisation of salmonids against yersiniosis.

2. PRODUCTION

2-1. *PREPARATION OF THE VACCINE*

The strains of *Y. ruckeri* are harvested and inactivated by a suitable method. They may be purified and concentrated. Whole or disrupted cells may be used and the vaccine may contain extracellular products of the bacterium released into the growth medium.

2-2. *CHOICE OF VACCINE COMPOSITION*

The strains of *Y. ruckeri* used are shown to be suitable with respect to the production of antigens of assumed protective importance. The vaccine is shown to be satisfactory with respect to safety (*5.2.6*) and efficacy (*5.2.7*) in the species of fish for which it is intended.

Vaccines

The following tests for safety (section 2-2-1) and immunogenicity (section 2-2-2) may be used during the demonstration of safety and efficacy.

2-2-1. **Safety**

2-2-1-1. *Laboratory tests*. Safety is tested using test 2-2-1-1-1, test 2-2-1-1-2, or both, depending on the recommendations for use.

Carry out the test in each species of fish for which the vaccine is intended, using in each case fish of the minimum body mass to be recommended for vaccination. Use a batch of vaccine containing not less than the maximum potency that may be expected in a batch of vaccine. The test is carried out in the conditions to be recommended for use of the vaccine with a water temperature not less than 10 °C.

2-2-1-1-1. *Vaccines intended for administration by injection*. Use not fewer than 50 fish from a population that does not have specific antibodies against the relevant serovars of *Y. ruckeri* and has not been vaccinated against or exposed to yersiniosis. Where the size of the fish for the test is such that a blood sample cannot be removed for antibody testing, a number of larger fish may be kept with the group for this purpose. Administer to each fish by the intraperitoneal route 1 dose of the vaccine. Observe the fish at least daily for 21 days.

The test is not valid if more than 6 per cent of the fish die from causes not attributable to the vaccine. The vaccine complies with the test if no fish shows abnormal local or systemic reactions or dies from causes attributable to the vaccine.

2-2-1-1-2. *Vaccines intended for administration by immersion*. Use not fewer than 50 fish from a population that does not have specific antibodies against the relevant serovars of *Y. ruckeri* and has not been vaccinated against or exposed to yersiniosis. Where the size of the fish for the test is such that a blood sample cannot be removed for antibody testing, a number of larger fish may be kept with the group for this purpose. Prepare an immersion bath at twice the concentration to be recommended. Bathe the fish for twice the time to be recommended. Observe the fish at least daily for 21 days.

The test is not valid if more than 6 per cent of the fish die from causes not attributable to the vaccine. The vaccine complies with the test if no fish shows abnormal local or systemic reactions or dies from causes attributable to the vaccine.

2-2-2. **Immunogenicity**. Carry out a separate test for each fish species and each serovar included in the vaccine, according to a protocol defining water source, water flow and temperature limits, and preparation of a standardised challenge. Each test is carried out for each route and method of administration to be recommended. Where the size of the fish for the test is such that a blood sample cannot be removed for antibody testing, a number of larger fish of the same origin may be selected for this purpose. The vaccine administered to each fish is of minimum potency.

Use for the test not fewer than 60 fish of the minimum body mass to be recommended for vaccination, from a population that does not have specific antibodies against the relevant serovars of *Y. ruckeri* and has not been vaccinated against or exposed to yersiniosis. Vaccinate not fewer than 30 fish according to the instructions for use. Perform mock vaccination on a control group of not fewer than 30 fish; mark vaccinated and control fish for identification. Keep all the fish in the same tank or mix equal numbers of controls and vaccinates in each tank if more than 1 tank is used. Where justified and when fish cannot be marked, non-marked fish may be used. Vaccinates and controls may then be kept in the same tank but physically separated (for example by fishing nets). Challenge each fish at a fixed interval after vaccination, corresponding to the onset of immunity claimed, by injection or immersion, with a sufficient quantity of cultures of *Y. ruckeri* whose virulence has been verified or, where all fish are kept in the same tank, with a sufficient challenge by cohabitation. Observe the fish at least daily until at least 60 per cent specific mortality is reached in the control group. Plot for both vaccinates and controls a curve of specific mortality against time and determine by interpolation the time corresponding to 60 per cent specific mortality in controls.

The test is not valid if the specific mortality is less than 60 per cent in the control group 21 days after the 1st death in the fish. Read from the curve for vaccinates the mortality (*M*) at the time corresponding to 60 per cent mortality in controls. Calculate the relative percentage survival (RPS) using the following expression:

$$\left(1 - \frac{M}{60}\right) \times 100$$

For serovar 1 vaccines, the vaccine complies with the test if the RPS is not less than 75 per cent for vaccines administered by immersion and 90 per cent for vaccines administered by injection.

For serovar 2 vaccines, the vaccine complies with the test if the RPS is not less than 60 per cent for vaccines administered by immersion and 85 per cent for vaccines administered by injection.

2-3. *MANUFACTURER'S TESTS*

2-3-1. **Batch potency test**. The potency test (section 3-3) may be carried out for each batch of the vaccine, using fish of one of the species for which the vaccine is intended. Where the test is not carried out, an alternative validated method based on antibody response in fish or other vertebrate animals may be used, the criteria for acceptance being set with reference to a batch of vaccine that has given satisfactory results in the test described under Potency. The following test may be used.

Use not fewer than 25 fish from a population that does not have specific antibodies against the relevant serovars of *Y. ruckeri* and that are within specified limits for body mass. Carry out the test at a defined temperature. Inject into each of not fewer than 20 fish 1 dose of vaccine, according to the instructions for use. Perform mock vaccination on a control group of not fewer than 5 fish. Collect blood samples at a defined time after vaccination. Determine for each sample the level of specific antibodies against the relevant serovars of *Y. ruckeri* included in the vaccine by a suitable immunochemical method (*2.7.1*).

The test is not valid if the control group shows antibodies against the relevant serovars of *Y. ruckeri*. The vaccine complies with the test if the mean level of antibodies in the vaccinates is not significantly lower than that found for a batch that gave satisfactory results in the test described under Potency.

3. BATCH TESTS

3-1. **Identification**. When injected into animals that do not have specific antibodies against the relevant serovars of *Y. ruckeri*, the vaccine stimulates the production of such antibodies or protects against virulent challenge with *Y. ruckeri*.

3-2. **Bacteria and fungi**. The vaccine, including where applicable the diluent supplied for reconstitution, complies with the test for sterility prescribed in the monograph *Vaccines for veterinary use (0062)*.

3-3. **Potency**. The vaccine complies with the requirements of the test mentioned under Immunogenicity (section 2-2-2) when administered by a recommended route and method.

4. LABELLING

The label states information on the time needed for development of immunity after vaccination under the range of conditions corresponding to the recommended use.

01/2008:0085

BOTULINUM ANTITOXIN

Immunoserum botulinicum

DEFINITION

Botulinum antitoxin is a preparation containing antitoxic globulins that have the power of specifically neutralising the toxins formed by *Clostridium botulinum* type A, type B or type E, or any mixture of these types.

PRODUCTION

It is obtained by fractionation from the serum of horses, or other mammals, that have been immunised against *Cl. botulinum* type A, type B and type E toxins.

IDENTIFICATION

It specifically neutralises the types of *Cl. botulinum* toxins stated on the label, rendering them harmless to susceptible animals.

POTENCY

Not less than 500 IU of antitoxin per millilitre for each of types A and B and not less than 50 IU of antitoxin per millilitre for type E.

The potency of botulinum antitoxin is determined by comparing the dose necessary to protect mice against the lethal effects of a fixed dose of botulinum toxin with the quantity of the standard preparation of botulinum antitoxin necessary to give the same protection. For this comparison a reference preparation of each type of botulinum antitoxin, calibrated in International Units, and suitable preparations of botulinum toxins, for use as test toxins, are required. The potency of each test toxin is determined in relation to the specific reference preparation; the potency of the botulinum antitoxin to be examined is determined in relation to the potency of the test toxins by the same method.

International Units of the antitoxin are the specific neutralising activity for botulinum toxin type A, type B and type E contained in stated amounts of the International Standards which consist of dried immune horse sera of types A, B and E. The equivalence in International Units of the International Standard is stated from time to time by the World Health Organization.

Selection of animals. Use mice having body masses such that the difference between the lightest and the heaviest does not exceed 5 g.

Preparation of test toxins. CAUTION: Botulinum toxin is extremely toxic: exceptional care must be taken in any procedure in which it is employed. Prepare type A, B and E toxins from sterile filtrates of approximately 7-day cultures in liquid medium of *Cl. botulinum* types A, B and E. To the filtrates, add 2 volumes of glycerol, concentrate, if necessary, by dialysis against glycerol and store at or slightly below 0 °C.

Selection of test toxins. Select toxins of each type for use as test toxins by determining for mice the L+/10 dose and the LD_{50}, the observation period being 96 h. The test toxins contain at least 1000 LD_{50} in an L+/10 dose.

Determination of test doses of the toxins (L+/10 dose). Prepare solutions of the reference preparations in a suitable liquid such that each contains 0.25 IU of antitoxin per millilitre. Using each solution in turn, determine the test dose of the corresponding test toxin.

Prepare mixtures of the solution of the reference preparation and the test toxin such that each contains 2.0 mL of the solution of the reference preparation, one of a graded series of volumes of the test toxin and sufficient of a suitable liquid to bring the total volume to 5.0 mL. Allow the mixtures to stand at room temperature, protected from light, for 60 min. Using four mice for each mixture, inject a dose of 1.0 mL intraperitoneally into each mouse. Observe the mice for 96 h.

The test dose of toxin is the quantity in 1.0 mL of the mixture made with the smallest amount of toxin capable of causing, despite partial neutralisation by the reference preparation, the death of all four mice injected with the mixture within the observation period.

Determination of potency of the antitoxin. Prepare solutions of each reference preparation in a suitable liquid such that each contains 0.25 IU of antitoxin per millilitre.

Prepare solutions of each test toxin in a suitable liquid such that each contains 2.5 test doses per millilitre.

Using each toxin solution and the corresponding reference preparation in turn, determine the potency of the antitoxin. Prepare mixtures of the solution of the test toxin and the antitoxin to be examined such that each contains 2.0 mL of the solution of the test toxin, one of a graded series of volumes of the antitoxin to be examined, and sufficient of a suitable liquid to bring the total volume to 5.0 mL. Also prepare mixtures of the solution of the test toxin and the solution of the reference preparation such that each contains 2.0 mL of the solution of the test toxin, one of a graded series of volumes of the solution of the reference preparation centred on that volume (2.0 mL) that contains 0.5 IU, and sufficient of a suitable liquid to bring the total volume to 5.0 mL. Allow the mixtures to stand at room temperature, protected from light, for 60 min. Using four mice for each mixture, inject a dose of 1.0 mL intraperitoneally into each mouse. Observe the mice for 96 h.

The mixture that contains the largest volume of antitoxin that fails to protect the mice from death contains 0.5 IU. This quantity is used to calculate the potency of the antitoxin in International Units per millilitre.

The test is not valid unless all the mice injected with mixtures containing 2.0 mL or less of the solution of the reference preparation die and all those injected with mixtures containing more survive.

LABELLING

The label states the types of *Cl. botulinum* toxin neutralised by the preparation.

01/2008:0086

DIPHTHERIA ANTITOXIN

Immunoserum diphthericum

DEFINITION

Diphtheria antitoxin is a preparation containing antitoxic globulins that have the power of specifically neutralising the toxin formed by *Corynebacterium diphtheriae*.

PRODUCTION

It is obtained by fractionation from the serum of horses, or other mammals, that have been immunised against diphtheria toxin.

IDENTIFICATION

It specifically neutralises the toxin formed by *C. diphtheriae*, rendering it harmless to susceptible animals.

ASSAY

Not less than 1000 IU of antitoxin per millilitre for antitoxin obtained from horse serum. Not less than 500 IU of antitoxin per millilitre for antitoxin obtained from the serum of other mammals.

The potency of diphtheria antitoxin is determined by comparing the dose necessary to protect guinea-pigs or rabbits against the erythrogenic effects of a fixed dose of diphtheria toxin with the quantity of the standard preparation of diphtheria antitoxin necessary to give the same protection.

For this comparison a reference preparation of diphtheria antitoxin, calibrated in International Units, and a suitable preparation of diphtheria toxin, for use as a test toxin, are required. The potency of the test toxin is determined in relation to the reference preparation; the potency of the diphtheria antitoxin to be examined is determined in relation to the potency of the test toxin by the same method.

The International Unit of antitoxin is the specific neutralising activity for diphtheria toxin contained in a stated amount of the International Standard, which consists of a quantity of dried immune horse serum. The equivalence in International Units of the International Standard is stated by the World Health Organization.

Preparation of test toxin. Prepare diphtheria toxin from cultures of *C. diphtheriae* in a liquid medium. Filter the culture to obtain a sterile toxic filtrate and store at 4 °C.

Selection of test toxin. Select a toxin for use as a test toxin by determining for guinea-pigs or rabbits the lr/100 dose and the minimal reacting dose, the observation period being 48 h. The test toxin has at least 200 minimal reacting doses in the lr/100 dose.

Minimal reacting dose. This is the smallest quantity of toxin which, when injected intracutaneously into guinea-pigs or rabbits, causes a small, characteristic reaction at the site of injection within 48 h.

The test toxin is allowed to stand for some months before being used for the assay of antitoxin. During this time its toxicity declines and the lr/100 dose may be increased. Determine the minimal reacting dose and the lr/100 dose at frequent intervals. When experiment shows that the lr/100 dose is constant, the test toxin is ready for use and may be used for a long period. Store the test toxin in the dark at 0 °C to 5 °C. Maintain its sterility by the addition of toluene or other antimicrobial preservative that does not cause a rapid decline in specific toxicity.

Determination of test dose of toxin (lr/100 dose). Prepare a solution of the reference preparation in a suitable liquid such that it contains 0.1 IU of antitoxin per millilitre.

Prepare mixtures of the solution of the reference preparation and of the test toxin such that each contains 1.0 mL of the solution of the reference preparation, one of a graded series of volumes of the test toxin and sufficient of a suitable liquid to bring the total volume to 2.0 mL. Allow the mixtures to stand at room temperature, protected from light, for 15 min to 60 min. Using two animals for each mixture, inject a dose of 0.2 mL intracutaneously into the shaven or depilated flanks of each animal. Observe the animals for 48 h.

The test dose of toxin is the quantity in 0.2 mL of the mixture made with the smallest amount of toxin capable of causing, despite partial neutralisation by the reference preparation, a small but characteristic erythematous lesion at the site of injection.

Determination of potency of the antitoxin. Prepare a solution of the reference preparation in a suitable liquid such that it contains 0.125 IU of antitoxin per millilitre.

Prepare a solution of the test toxin in a suitable liquid such that it contains 12.5 test doses per millilitre.

Prepare mixtures of the solution of the test toxin and of the antitoxin to be examined such that each contains 0.8 mL of the solution of the test toxin, one of a graded series of volumes of the antitoxin to be examined and sufficient of a suitable liquid to bring the total volume to 2.0 mL. Also prepare mixtures of the solution of the test toxin and the solution of the reference preparation such that each contains 0.8 mL of the solution of the test toxin, one of a graded series of volumes of the solution of the reference preparation centred on that volume (0.8 mL) that contains 0.1 IU and sufficient of a suitable liquid to bring the total volume to 2.0 mL. Allow the mixtures to stand at room temperature, protected from light, for 15 min to 60 min. Using two animals for each mixture, inject a dose of 0.2 mL intracutaneously into the shaven or depilated flanks of each animal. Observe the animals for 48 h.

The mixture that contains the largest volume of antitoxin that fails to protect the guinea-pigs from the erythematous effects of the toxin contains 0.1 IU. This quantity is used to calculate the potency of the antitoxin in International Units per millilitre.

The test is not valid unless all the sites injected with mixtures containing 0.8 mL or less of the solution of the reference preparation show erythematous lesions and at all those injected with mixtures containing more there are no lesions.

01/2008:0090

GAS-GANGRENE ANTITOXIN, MIXED

Immunoserum gangraenicum mixtum

DEFINITION

Mixed gas-gangrene antitoxin is prepared by mixing gas-gangrene antitoxin (novyi), gas-gangrene antitoxin (perfringens) and gas-gangrene antitoxin (septicum) in appropriate quantities.

IDENTIFICATION

It specifically neutralises the alpha toxins formed by *Clostridium novyi* (former nomenclature: *Clostridium oedematiens*), *Clostridium perfringens* and *Clostridium septicum*, rendering them harmless to susceptible animals.

ASSAY

Gas-gangrene antitoxin (novyi), not less than 1000 IU of antitoxin per millilitre; gas-gangrene antitoxin (perfringens), not less than 1000 IU of antitoxin per millilitre; gas-gangrene antitoxin (septicum) not less than 500 IU of antitoxin per millilitre.

Carry out the assay for each component, as prescribed in the monographs on *Gas-gangrene antitoxin (novyi) (0087)*, *Gas-gangrene antitoxin (perfringens) (0088)* and *Gas-gangrene antitoxin (septicum) (0089)*.

01/2008:0087

GAS-GANGRENE ANTITOXIN (NOVYI)

Immunoserum gangraenicum (Clostridium novyi)

DEFINITION

Gas-gangrene antitoxin (novyi) is a preparation containing antitoxic globulins that have the power of neutralising the alpha toxin formed by *Clostridium novyi* (Former nomenclature: *Clostridium oedematiens*). It is obtained by fractionation from the serum of horses, or other mammals, that have been immunised against *Cl. novyi* alpha toxin.

IDENTIFICATION

It specifically neutralises the alpha toxin formed by *Cl. novyi*, rendering it harmless to susceptible animals.

ASSAY

Not less than 3750 IU of antitoxin per millilitre.

The potency of gas-gangrene antitoxin (novyi) is determined by comparing the dose necessary to protect mice or other suitable animals against the lethal effects of a fixed dose of *Cl. novyi* toxin with the quantity of the standard preparation of gas-gangrene antitoxin (novyi) necessary to give the same protection. For this comparison a reference preparation of gas-gangrene antitoxin (novyi), calibrated in International

Units, and a suitable preparation of *Cl. novyi* toxin for use as a test toxin are required. The potency of the test toxin is determined in relation to the reference preparation; the potency of the gas-gangrene antitoxin (novyi) to be examined is determined in relation to the potency of the test toxin by the same method.

The International Unit of antitoxin is the specific neutralising activity for *Cl. novyi* toxin contained in a stated amount of the International Standard, which consists of a quantity of dried immune horse serum. The equivalence in International Units of the International Standard is stated by the World Health Organization.

Selection of animals. Use mice having body masses such that the difference between the lightest and the heaviest does not exceed 5 g.

Preparation of test toxin. Prepare the test toxin from a sterile filtrate of an approximately 5-day culture in liquid medium of *Cl. novyi*. Treat the filtrate with *ammonium sulfate R*, collect the precipitate, which contains the toxin, dry *in vacuo* over *diphosphorus pentoxide R*, powder and store dry.

Selection of test toxin. Select a toxin for use as a test toxin by determining for mice the L+ dose and the LD_{50}, the observation period being 72 h. The test toxin has an L+ dose of 0.5 mg or less and contains not less than 25 LD_{50} in each L+ dose.

Determination of test dose of toxin (L+ dose). Prepare a solution of the reference preparation in a suitable liquid such that it contains 12.5 IU of antitoxin per millilitre.

Prepare a solution of the test toxin in a suitable liquid such that 1 mL contains a precisely known amount such as 10 mg.

Prepare mixtures of the solution of the reference preparation and the solution of the test toxin such that each contains 0.8 mL of the solution of the reference preparation, one of a graded series of volumes of the solution of the test toxin and sufficient of a suitable liquid to bring the total volume to 2.0 mL. Allow the mixtures to stand at room temperature, protected from light, for 60 min. Using six mice for each mixture, inject a dose of 0.2 mL intramuscularly into each mouse. Observe the mice for 72 h.

The test dose of toxin is the quantity in 0.2 mL of the mixture made with the smallest amount of toxin capable of causing, despite partial neutralisation by the reference preparation, the death of all six mice injected with the mixture within the observation period.

Determination of potency of the antitoxin. Prepare a solution of the reference preparation in a suitable liquid such that it contains 12.5 IU of antitoxin per millilitre.

Prepare a solution of the test toxin in a suitable liquid such that it contains 12.5 test doses per millilitre.

Prepare mixtures of the solution of the test toxin and the antitoxin to be examined such that each contains 0.8 mL of the solution of the test toxin, one of a graded series of volumes of the antitoxin to be examined and sufficient of a suitable liquid to bring the total volume to 2.0 mL. Also prepare mixtures of the solution of the test toxin and the solution of the reference preparation such that each contains 0.8 mL of the solution of the test toxin, one of a graded series of volumes of the solution of the reference preparation centred on that volume (0.8 mL) that contains 10 IU and sufficient of a suitable liquid to bring the total volume to 2.0 mL. Allow the mixtures to stand at room temperature, protected from light, for 60 min. Using six mice for each mixture, inject a dose of 0.2 mL intramuscularly into each mouse. Observe the mice for 72 h.

The mixture that contains the largest volume of antitoxin that fails to protect the mice from death contains 10 IU. This quantity is used to calculate the potency of the antitoxin in International Units per millilitre.

The test is not valid unless all the mice injected with mixtures containing 0.8 mL or less of the solution of the reference preparation die and all those injected with mixtures containing a larger volume survive.

01/2008:0088

GAS-GANGRENE ANTITOXIN (PERFRINGENS)

Immunoserum gangraenicum (Clostridium perfringens)

DEFINITION

Gas-gangrene antitoxin (perfringens) is a preparation containing antitoxic globulins that have the power of specifically neutralising the alpha toxin formed by *Clostridium perfringens*. It is obtained by fractionation from the serum of horses, or other mammals, that have been immunised against *Cl. perfringens* alpha toxin.

IDENTIFICATION

It specifically neutralises the alpha toxin formed by *Cl. perfringens*, rendering it harmless to susceptible animals.

ASSAY

Not less than 1500 IU of antitoxin per millilitre.

The potency of gas-gangrene antitoxin (perfringens) is determined by comparing the dose necessary to protect mice or other suitable animals against the lethal effects of a fixed dose of *Cl. perfringens* toxin with the quantity of the standard preparation of gas-gangrene antitoxin (perfringens) necessary to give the same protection. For this comparison a reference preparation of gas-gangrene antitoxin (perfringens), calibrated in International Units, and a suitable preparation of *Cl. perfringens* toxin for use as a test toxin are required. The potency of the test toxin is determined in relation to the reference preparation; the potency of the gas-gangrene antitoxin (perfringens) to be examined is determined in relation to the potency of the test toxin by the same method.

The International Unit of antitoxin is the specific neutralising activity for *Cl. perfringens* toxin contained in a stated amount of the International Standard, which consists of a quantity of dried immune horse serum. The equivalence in International Units of the International Standard is stated by the World Health Organization.

Selection of animals. Use mice having body masses such that the difference between the lightest and the heaviest does not exceed 5 g.

Preparation of test toxin. Prepare the test toxin from a sterile filtrate of an approximately 5-day culture in liquid medium of *Cl. perfringens*. Treat the filtrate with *ammonium sulfate R*, collect the precipitate, which contains the toxin, dry *in vacuo* over *diphosphorus pentoxide R*, powder and store dry.

Selection of test toxin. Select a toxin for use as a test toxin by determining for mice the L+ dose and the LD_{50}, the observation period being 48 h. The test toxin has an L+ dose of 4 mg or less and contains not less than 20 LD_{50} in each L+ dose.

Determination of test dose of toxin (L+ dose). Prepare a solution of the reference preparation in a suitable liquid such that it contains 5 IU of antitoxin per millilitre.

Prepare a solution of the test toxin in a suitable liquid such that 1 mL contains a precisely known amount such as 10 mg.

Prepare mixtures of the solution of the reference preparation and the solution of the test toxin such that each contains 2.0 mL of the solution of the reference preparation, one of a graded series of volumes of the solution of the test toxin and sufficient of a suitable liquid to bring the total volume to 5.0 mL. Allow the mixtures to stand at room temperature,

Immunosera

protected from light, for 60 min. Using six mice for each mixture, inject a dose of 0.5 mL intravenously into each mouse. Observe the mice for 48 h.

The test dose of toxin is the quantity in 0.5 mL of the mixture made with the smallest amount of toxin capable of causing, despite partial neutralisation by the reference preparation, the death of all six mice injected with the mixture within the observation period.

Determination of potency of the antitoxin. Prepare a solution of the reference preparation in a suitable liquid such that it contains 5 IU of antitoxin per millilitre.

Prepare a solution of the test toxin in a suitable liquid such that it contains five test doses per millilitre.

Prepare mixtures of the solution of the test toxin and the antitoxin to be examined such that each contains 2.0 mL of the solution of the test toxin, one of a graded series of volumes of the antitoxin to be examined and sufficient of a suitable liquid to bring the total volume to 5.0 mL. Also prepare mixtures of the solution of the test toxin and the solution of the reference preparation such that each contains 2.0 mL of the solution of the test toxin, one of a graded series of volumes of the solution of the reference preparation centred on that volume (2.0 mL) that contains 10 IU and sufficient of a suitable liquid to bring the total volume to 5.0 mL. Allow the mixtures to stand at room temperature, protected from light, for 60 min. Using six mice for each mixture, inject a dose of 0.5 mL intravenously into each mouse. Observe the mice for 48 h.

The mixture that contains the largest volume of antitoxin that fails to protect the mice from death contains 10 IU. This quantity is used to calculate the potency of the antitoxin in International Units per millilitre.

The test is not valid unless all the mice injected with mixtures containing 2.0 mL or less of the solution of the reference preparation die and all those injected with mixtures containing a larger volume survive.

01/2008:0089

GAS-GANGRENE ANTITOXIN (SEPTICUM)

Immunoserum gangraenicum (Clostridium septicum)

DEFINITION

Gas-gangrene antitoxin (septicum) is a preparation containing antitoxic globulins that have the power of specifically neutralising the alpha toxin formed by *Clostridium septicum*. It is obtained by fractionation from the serum of horses, or other mammals, that have been immunised against *Cl. septicum* alpha toxin.

IDENTIFICATION

It specifically neutralises the alpha toxin formed by *Cl. septicum*, rendering it harmless to susceptible animals.

ASSAY

Not less than 1500 IU of antitoxin per millilitre.

The potency of gas-gangrene antitoxin (septicum) is determined by comparing the dose necessary to protect mice or other suitable animals against the lethal effects of a fixed dose of *Cl. septicum* toxin with the quantity of the standard preparation of gas-gangrene antitoxin (septicum) necessary to give the same protection. For this comparison a reference preparation of gas-gangrene antitoxin (septicum), calibrated in International Units, and a suitable preparation of *Cl. septicum* toxin for use as a test toxin are required.

The potency of the test toxin is determined in relation to the reference preparation; the potency of the gas-gangrene antitoxin (septicum) to be examined is determined in relation to the potency of the test toxin by the same method.

The International Unit of antitoxin is the specific neutralising activity for *Cl. septicum* toxin contained in a stated amount of the International Standard, which consists of a quantity of dried immune horse serum. The equivalence in International Units of the International Standard is stated by the World Health Organization.

Selection of animals. Use mice having body masses such that the difference between the lightest and the heaviest does not exceed 5 g.

Preparation of test toxin. Prepare the test toxin from a sterile filtrate of an approximately 5-day culture in liquid medium of *Cl. septicum*. Treat the filtrate with *ammonium sulfate R*, collect the precipitate, which contains the toxin, dry *in vacuo* over *diphosphorus pentoxide R*, powder and store dry.

Selection of test toxin. Select a toxin for use as a test toxin by determining for mice the L+ dose and the LD_{50}, the observation period being 72 h. The test toxin has an L+ dose of 0.5 mg or less and contains not less than 25 LD_{50} in each L+ dose.

Determination of test dose of toxin (L+ dose). Prepare a solution of the reference preparation in a suitable liquid such that it contains 5 IU of antitoxin per millilitre.

Prepare a solution of the test toxin in a suitable liquid such that 1 mL contains a precisely known amount such as 20 mg.

Prepare mixtures of the solution of the reference preparation and the solution of the test toxin such that each contains 2.0 mL of the solution of the reference preparation, one of a graded series of volumes of the solution of the test toxin and sufficient of a suitable liquid to bring the total volume to 5.0 mL. Allow the mixtures to stand at room temperature, protected from light, for 60 min. Using six mice for each mixture, inject a dose of 0.5 mL intravenously into each mouse. Observe the mice for 72 h.

The test dose of toxin is the quantity in 0.5 mL of the mixture made with the smallest amount of toxin capable of causing, despite partial neutralisation by the reference preparation, the death of all six mice injected with the mixture within the observation period.

Determination of potency of the antitoxin. Prepare a solution of the reference preparation in a suitable liquid such that it contains 5 IU of antitoxin per millilitre.

Prepare a solution of the test toxin in a suitable liquid such that it contains five test doses per millilitre.

Prepare mixtures of the solution of the test toxin and the antitoxin to be examined such that each contains 2.0 mL of the solution of the test toxin, one of a graded series of volumes of the antitoxin to be examined and sufficient of a suitable liquid to bring the total volume to 5.0 mL. Also prepare mixtures of the solution of the test toxin and the solution of the reference preparation such that each contains 2.0 mL of the solution of the test toxin, one of a graded series of volumes of the solution of the reference preparation centred on that volume (2.0 mL) that contains 10 IU and sufficient of a suitable liquid to bring the total volume to 5.0 mL. Allow the mixtures to stand at room temperature, protected from light, for 60 min. Using six mice for each mixture, inject a dose of 0.5 mL intravenously into each mouse. Observe the mice for 72 h.

The mixture that contains the largest volume of antitoxin that fails to protect the mice from death contains 10 IU. This quantity is used to calculate the potency of the antitoxin in International Units per millilitre.

The test is not valid unless all the mice injected with mixtures containing 2.0 mL or less of the solution of the reference preparation die and all those injected with mixtures containing more survive.

01/2008:0091

TETANUS ANTITOXIN FOR HUMAN USE

Immunoserum tetanicum ad usum humanum

DEFINITION

Tetanus antitoxin for human use is a preparation containing antitoxic globulins that have the power of specifically neutralising the toxin formed by *Clostridium tetani*.

PRODUCTION

It is obtained by fractionation from the serum of horses, or other mammals, that have been immunised against tetanus toxin.

IDENTIFICATION

It specifically neutralises the toxin formed by *Cl. tetani*, rendering it harmless to susceptible animals.

POTENCY

Not less than 1000 IU of antitoxin per millilitre when intended for prophylactic use. Not less than 3000 IU of antitoxin per millilitre when intended for therapeutic use.

The potency of tetanus antitoxin is determined by comparing the dose necessary to protect guinea-pigs or mice against the paralytic effects of a fixed dose of tetanus toxin with the quantity of the standard preparation of tetanus antitoxin necessary to give the same protection. In countries where the paralysis method is not obligatory the lethal method may be used. For this method the number of animals and the procedure are identical with those described for the paralysis method but the end-point is the death of the animal rather than the onset of paralysis and the L+/10 dose is used instead of the Lp/10 dose. For this comparison a reference preparation of tetanus antitoxin, calibrated in International Units, and a suitable preparation of tetanus toxin, for use as a test toxin, are required. The potency of the test toxin is determined in relation to the reference preparation; the potency of the tetanus antitoxin to be examined is determined in relation to the potency of the test toxin by the same method.

The International Unit of antitoxin is the specific neutralising activity for tetanus toxin contained in a stated amount of the International Standard which consists of a quantity of dried immune horse serum. The equivalence in International Units of the International Standard is stated by the World Health Organization.

Selection of animals. If mice are used, the body masses should be such that the difference between the lightest and the heaviest does not exceed 5 g.

Preparation of test toxin. Prepare the test toxin from a sterile filtrate of an approximately 9-day culture in liquid medium of *Cl. tetani*. To the filtrate add 1 to 2 volumes of glycerol and store slightly below 0 °C. Alternatively, treat the filtrate with *ammonium sulfate R*, collect the precipitate, which contains the toxin, dry *in vacuo* over *diphosphorus pentoxide R*, powder and store dry, either in sealed ampoules or *in vacuo* over *diphosphorus pentoxide R*.

Determination of test dose of toxin (Lp/10 dose). Prepare a solution of the reference preparation in a suitable liquid such that it contains 0.5 IU of antitoxin per millilitre.

If the test toxin is stored dry, reconstitute it using a suitable liquid.

Prepare mixtures of the solution of the reference preparation and the test toxin such that each contains 2.0 mL of the solution of the reference preparation, one of a graded series of volumes of the test toxin and sufficient of a suitable liquid to bring the volume to 5.0 mL. Allow the mixtures to stand at room temperature, protected from light, for 60 min. Using six mice for each mixture, inject a dose of 0.5 mL subcutaneously into each mouse. Observe the mice for 96 h. Mice that become paralysed may be euthanised.

The test dose of toxin is the quantity in 0.5 mL of the mixture made with the smallest amount of toxin capable of causing, despite partial neutralisation by the reference preparation, paralysis in all six mice injected with the mixture within the observation period.

Determination of potency of the antitoxin. Prepare a solution of the reference preparation in a suitable liquid such that it contains 0.5 IU of antitoxin per millilitre.

Prepare a solution of the test toxin in a suitable liquid such that it contains five test doses per millilitre.

Prepare mixtures of the solution of the test toxin and the antitoxin to be examined such that each contains 2.0 mL of the solution of the test toxin, one of a graded series of volumes of the antitoxin to be examined and sufficient of a suitable liquid to bring the total volume to 5.0 mL. Also prepare mixtures of the solution of the test toxin and the solution of the reference preparation such that each contains 2.0 mL of the solution of the test toxin, one of a graded series of volumes of the solution of the reference preparation centred on that volume (2.0 mL) that contains 1 IU and sufficient of a suitable liquid to bring the total volume to 5.0 mL. Allow the mixtures to stand at room temperature, protected from light, for 60 min. Using six mice for each mixture, inject into each mouse subcutaneously a dose of 0.5 mL. Observe the mice for 96 h. Mice that become paralysed may be euthanised.

The mixture that contains the largest volume of antitoxin that fails to protect the mice from paralysis contains 1 IU. This quantity is used to calculate the potency of the antitoxin in International Units per millilitre.

The test is not valid unless all the mice injected with mixtures containing 2.0 mL or less of the solution of the reference preparation show paralysis and all those injected with mixtures containing more do not.

01/2008:0145

VIPER VENOM ANTISERUM, EUROPEAN

Immunoserum contra venena viperarum europaearum

DEFINITION

European viper venom antiserum is a preparation containing antitoxic globulins that have the power of neutralising the venom of one or more species of viper. The globulins are obtained by fractionation of the serum of animals that have been immunised against the venom or venoms.

IDENTIFICATION

It neutralises the venom of *Vipera ammodytes*, or *Vipera aspis*, or *Vipera berus*, or *Vipera ursinii* or the mixture of these venoms stated on the label, rendering them harmless to susceptible animals.

ASSAY

Each millilitre of the preparation to be examined contains sufficient antitoxic globulins to neutralise not less than 100 mouse LD_{50} of *Vipera ammodytes* venom or *Vipera aspis* venom and not less than 50 mouse LD_{50} of the venoms of other species of viper.

The potency of European viper venom antiserum is determined by estimating the dose necessary to protect mice against the lethal effects of a fixed dose of venom of the relevant species of viper.

Selection of test venoms. Use venoms which have the normal physicochemical, toxicological and immunological characteristics of venoms from the particular species of vipers. They are preferably freeze-dried and stored in the dark at 5 ± 3 °C.

Select a venom for use as a test venom by determining the LD_{50} for mice, the observation period being 48 h.

Determination of the test dose of venom. Prepare graded dilutions of the reconstituted venom in a 9 g/L solution of *sodium chloride R* or other isotonic diluent in such a manner that the middle dilution contains in 0.25 mL the dose expected to be the LD_{50}. Dilute with an equal volume of the same diluent. Using at least four mice, each weighing 18 g to 20 g, for each dilution, inject 0.5 mL intravenously into each mouse. Observe the mice for 48 h and record the number of deaths. Calculate the LD_{50} using the usual statistical methods.

Determination of the potency of the antiserum to be examined. Dilute the reconstituted test venom so that 0.25 mL contains the test dose of 5 LD_{50} (test venom solution).

Prepare serial dilutions of the antiserum to be examined in a 9 g/L solution of *sodium chloride R* or other isotonic diluent, the dilution factor being 1.5 to 2.5. Use a sufficient number and range of dilutions to enable a mortality curve between 20 per cent and 80 per cent mortality to be established and to permit an estimation of the statistical variation.

Prepare mixtures such that 5 mL of each mixture contains 2.5 mL of one of the dilutions of the antiserum to be examined and 2.5 mL of the test venom solution. Allow the mixtures to stand in a water-bath at 37 °C for 30 min. Using not fewer than six mice, each weighing 18 g to 20 g, for each mixture, inject 0.5 mL intravenously into each mouse. Observe the mice for 48 h and record the number of deaths. Calculate the PD_{50}, using the usual statistical methods. At the same time verify the number of LD_{50} in the test dose of venom, using the method described above. Calculate the potency of the antiserum using the following expression:

$$\frac{(T_v - 1)}{PD_{50}}$$

T_v = number of LD_{50} in the test dose of venom.

In each mouse dose of the venom-antiserum mixture at the end point there is one LD_{50} of venom remaining unneutralised by the antiserum and it is this unneutralised venom that is responsible for the deaths of 50 per cent of the mice inoculated with the mixture. The amount of venom neutralised by the antiserum is thus one LD_{50} less than the total amount contained in each mouse dose. Therefore, as the potency of the antiserum is defined in terms of the number of LD_{50} of venom that are neutralised. rather than the number of LD_{50} in each mouse dose, the expression required in the calculation of potency is $T_v - 1$ rather than T_v.

Alternatively, the quantity of test venom in milligrams that is neutralised by 1 mL or some other defined volume of the antiserum to be examined may be calculated.

LABELLING

The label states the venom or venoms against which the antiserum is effective.

CAUTION: because of the allergenic properties of viper venoms, inhalation of venom dust should be avoided by suitable precautions.

Immunosera

01/2008:0339

CLOSTRIDIUM NOVYI ALPHA ANTITOXIN FOR VETERINARY USE

Immunoserum Clostridii novyi alpha ad usum veterinarium

DEFINITION

Clostridium novyi alpha antitoxin for veterinary use is a preparation containing the globulins that have the power of specifically neutralising the alpha toxin formed by *Clostridium novyi*. It consists of the serum or a preparation obtained from the serum of animals immunised against *C. novyi* alpha toxin.

PRODUCTION

CHOICE OF COMPOSITION

The antitoxin is shown to be satisfactory with respect to safety (*5.2.6*) and efficacy (*5.2.7*). For the latter, it shall be demonstrated, for each target species, that the product, when administered at the minimum recommended dose and according to the recommended schedule(s), provides a response or responses consistent with the claims made for the product.

Batch potency test. The test described under Potency is not necessarily carried out for routine testing of batches of antitoxin. It is carried out on 1 or more occasions as decided by or with the agreement of the competent authority. Where the test is not carried out, a suitable validated alternative test is carried out, the criteria for acceptance being set with reference to a batch of antitoxin that has given satisfactory results in the test described under Potency and that has been shown to be satisfactory with respect to immunogenicity in the target species. The following test may be used after a satisfactory correlation with the test described under Potency has been established.

Determine the level of antibodies against *C. novyi* alpha toxin in the batch of antitoxin using a suitable method such as an immunochemical method (*2.7.1*) or neutralisation in cell cultures. Use a homologous reference serum calibrated in International Units of Clostridium novyi alpha antitoxin.

The International Unit is the specific neutralising activity for *C. novyi* alpha toxin contained in a stated amount of the International Standard, which consists of a quantity of dried immune horse serum. The equivalence in International Units of the International Standard is stated by the World Health Organization.

The potency of the finished product is expressed in International Units per millilitre and is shown to be not less than the minimum number stated on the label.

IDENTIFICATION

The antitoxin is shown, by a suitable immunochemical method (*2.7.1*), to react specifically with the alpha toxin formed by *C. novyi*.

POTENCY

The potency of Clostridium novyi alpha antitoxin is determined by comparing the dose necessary to protect mice or other suitable animals against the toxic effects of a fixed dose of *C. novyi* alpha toxin with the quantity of a reference preparation of Clostridium novyi alpha antitoxin, calibrated in International Units, necessary to give the same protection. For this comparison, a suitable preparation of *C. novyi* alpha toxin for use as a test toxin is required. The dose of the test toxin is determined in relation to the reference preparation; the potency of the antitoxin to be examined is determined in relation to the reference preparation using the test toxin.

Preparation of test toxin. Prepare the test toxin from a sterile filtrate of an approximately 5-day culture in liquid medium of *C. novyi* type B and dry by a suitable method. Select the test toxin by determining for mice the L+/10 dose and the LD_{50}, the observation period being 72 h. A suitable alpha toxin contains not less than one L+/10 dose in 0.05 mg and not less than 10 LD_{50} in each L+/10 dose.

Determination of test dose of toxin. Prepare a solution of the reference preparation in a suitable liquid so that it contains 1 IU/mL. Prepare a solution of the test toxin in a suitable liquid so that 1 mL contains a precisely known amount such as 1 mg. Prepare mixtures of the solution of the reference preparation and the solution of the test toxin such that each mixture contains 1.0 mL of the solution of the reference preparation (1 IU), one of a series of graded volumes of the solution of the test toxin and sufficient of a suitable liquid to bring the total volume to 2.0 mL. Allow the mixtures to stand at room temperature for 60 min. Using not fewer than 2 mice, each weighing 17-22 g, for each mixture, inject a dose of 0.2 mL intramuscularly or subcutaneously into each mouse. Observe the mice for 72 h. If all the mice die, the amount of toxin present in 0.2 mL of the mixture is in excess of the test dose. If none of the mice die, the amount of toxin present in 0.2 mL of the mixture is less than the test dose. Prepare similar fresh mixtures such that 2.0 mL of each mixture contains 1.0 mL of the solution of the reference preparation (1 IU) and 1 of a series of graded volumes of the solution of the test toxin separated from each other by steps of not more than 20 per cent and covering the expected end-point. Allow the mixtures to stand at room temperature for 60 min. Using not fewer than 2 mice for each mixture, inject a dose of 0.2 mL intramuscularly or subcutaneously into each mouse. Observe the mice for 72 h. Repeat the determination at least once and combine the results of the separate tests that have been carried out with mixtures of the same composition so that a series of totals is obtained, each total representing the mortality due to a mixture of a given composition. The test dose of toxin is the amount present in 0.2 mL of that mixture which causes the death of one half of the total number of mice injected with it.

Determination of the potency of the antitoxin to be examined

Preliminary test. Dissolve a quantity of the test toxin in a suitable liquid so that 1 mL contains 10 times the test dose (solution of the test toxin). Prepare mixtures of the solution of the test toxin and of the antitoxin to be examined such that each mixture contains 1.0 mL of the solution of the test toxin, one of a series of graded volumes of the antitoxin to be examined and sufficient of a suitable liquid to bring the final volume to 2.0 mL. Allow the mixtures to stand at room temperature for 60 min. Using not fewer than 2 mice for each mixture, inject a dose of 0.2 mL intramuscularly or subcutaneously into each mouse. Observe the mice for 72 h. If none of the mice die, 0.2 mL of the mixture contains more than 0.1 IU. If all the mice die, 0.2 mL of the mixture contains less than 0.1 IU.

Final test. Prepare mixtures of the solution of the test toxin and of the antitoxin to be examined such that 2.0 mL of each mixture contains 1.0 mL of the solution of the test toxin and one of a series of graded volumes of the antitoxin to be examined, separated from each other by steps of not more than 20 per cent and covering the expected end-point as determined by the preliminary test. Prepare further mixtures such that 2.0 mL of each mixture contains 1.0 mL of the solution of the test toxin and one of a series of graded volumes of the solution of the reference preparation, in order to confirm the test dose of the toxin. Allow the mixtures to stand at room temperature for 60 min. Using not fewer than 2 mice for each mixture, proceed as described in the preliminary test. The test mixture which contains 0.1 IU in 0.2 mL is that mixture which kills the same or almost the same number of mice as the reference mixture containing 0.1 IU in 0.2 mL. Repeat the determination

at least once and calculate the average of all valid estimates. Estimates are valid only if the reference preparation gives a result within 20 per cent of the expected value.

The confidence limits ($P = 0.95$) have been estimated to be:

- 85 per cent and 114 per cent when 2 animals per dose are used;
- 91.5 per cent and 109 per cent when 4 animals per dose are used;
- 93 per cent and 108 per cent when 6 animals per dose are used.

The potency of the finished product is expressed in International Units per millilitre and is shown to be not less than the minimum number stated on the label.

01/2008:0340

CLOSTRIDIUM PERFRINGENS BETA ANTITOXIN FOR VETERINARY USE

Immunoserum Clostridii perfringentis beta ad usum veterinarium

DEFINITION

Clostridium perfringens beta antitoxin for veterinary use is a preparation containing principally the globulins that have the power of specifically neutralising the beta toxin formed by *Clostridium perfringens* (types B and C). It consists of the serum or a preparation obtained from the serum of animals immunised against *C. perfringens* beta toxin.

PRODUCTION

CHOICE OF COMPOSITION

The antitoxin is shown to be satisfactory with respect to safety (*5.2.6*) and efficacy (*5.2.7*). For the latter, it shall be demonstrated, for each target species, that the product, when administered at the minimum recommended dose and according to the recommended schedule(s), provides a response or responses consistent with the claims made for the product.

Batch potency test. The test described under Potency is not necessarily carried out for routine testing of batches of antitoxin. It is carried out on 1 or more occasions as decided by or with the agreement of the competent authority. Where the test is not carried out, a suitable validated alternative test is carried out, the criteria for acceptance being set with reference to a batch of antitoxin that has given satisfactory results in the test described under Potency and that has been shown to be satisfactory with respect to immunogenicity in the target species. The following test may be used after a satisfactory correlation with the test described under Potency has been established.

Determine the level of antibodies against *C. perfringens* beta toxin in the batch of antitoxin using a suitable method such as an immunochemical method (*2.7.1*) or neutralisation in cell cultures. Use a homologous reference serum calibrated in International Units of Clostridium perfringens beta antitoxin.

The International Unit is the specific neutralising activity for *C. perfringens* beta toxin contained in a stated amount of the International Standard, which consists of a quantity of dried immune horse serum. The equivalence in International Units of the International Standard is stated by the World Health Organization.

The potency of the finished product is expressed in International Units per millilitre and is shown to be not less than the minimum number stated on the label.

IDENTIFICATION

The antitoxin is shown, by a suitable immunochemical method (*2.7.1*), to react specifically with the beta toxin formed by *C. perfringens*.

POTENCY

The potency of Clostridium perfringens beta antitoxin is determined by comparing the dose necessary to protect mice or other suitable animals against the toxic effects of a fixed dose of *C. perfringens* beta toxin with the quantity of a reference preparation of Clostridium perfringens beta antitoxin, calibrated in International Units, necessary to give the same protection. For this comparison, a suitable preparation of *C. perfringens* beta toxin for use as a test toxin is required. The dose of the test toxin is determined in relation to the reference preparation; the potency of the antitoxin to be examined is determined in relation to the reference preparation using the test toxin.

Preparation of test toxin. Prepare the test toxin from a sterile filtrate of an early culture in liquid medium of *C. perfringens* type B or type C and dry by a suitable method. Select the test toxin by determining for mice the L+ dose and the LD_{50}, the observation period being 72 h. A suitable beta toxin contains not less than one L+ dose in 0.2 mg and not less than 25 LD_{50} in each L+ dose.

Determination of test dose of toxin. Prepare a solution of the reference preparation in a suitable liquid so that it contains 5 IU/mL. Prepare a solution of the test toxin in a suitable liquid so that 1 mL contains a precisely known amount such as 10 mg. Prepare mixtures of the solution of the reference preparation and the solution of the test toxin such that each mixture contains 2.0 mL of the solution of the reference preparation (10 IU), one of a series of graded volumes of the solution of the test toxin and sufficient of a suitable liquid to bring the total volume to 5.0 mL. Allow the mixtures to stand at room temperature for 30 min. Using not fewer than 2 mice, each weighing 17-22 g, for each mixture, inject a dose of 0.5 mL intravenously or intraperitoneally into each mouse. Observe the mice for 72 h. If all the mice die, the amount of toxin present in 0.5 mL of the mixture is in excess of the test dose. If none of the mice die, the amount of toxin present in 0.5 mL of the mixture is less than the test dose. Prepare similar fresh mixtures such that 5.0 mL of each mixture contains 2.0 mL of the solution of the reference preparation (10 IU) and 1 of a series of graded volumes of the solution of the test toxin separated from each other by steps of not more than 20 per cent and covering the expected end-point. Allow the mixtures to stand at room temperature for 30 min. Using not fewer than 2 mice for each mixture, inject a dose of 0.5 mL intravenously or intraperitoneally into each mouse. Observe the mice for 72 h. Repeat the determination at least once and combine the results of the separate tests that have been carried out with mixtures of the same composition so that a series of totals is obtained, each total representing the mortality due to a mixture of a given composition. The test dose of toxin is the amount present in 0.5 mL of that mixture which causes the death of one half of the total number of mice injected with it.

Determination of the potency of the antitoxin to be examined

Preliminary test. Dissolve a quantity of the test toxin in a suitable liquid so that 2.0 mL contains 10 times the test dose (solution of the test toxin). Prepare mixtures of the solution of the test toxin and of the antitoxin to be examined such that each mixture contains 2.0 mL of the solution of the test toxin, one of a series of graded volumes of the antitoxin to be examined and sufficent of a suitable liquid to bring the final volume to 5.0 mL. Allow the mixtures to stand at room temperature for 30 min. Using not fewer than 2 mice for each mixture, inject a dose of 0.5 mL intravenously or intraperitoneally into each mouse. Observe the mice for 72 h. If none of the mice die, 0.5 mL of the mixture contains more than 1 IU. If all the mice die, 0.5 mL of the mixture contains less than 1 IU.

Final test. Prepare mixtures of the solution of the test toxin and of the antitoxin to be examined such that 5.0 mL of each mixture contains 2.0 mL of the solution of the test toxin

and one of a series of graded volumes of the antitoxin to be examined, separated from each other by steps of not more than 20 per cent and covering the expected end-point as determined by the preliminary test. Prepare further mixtures such that 5.0 mL of each mixture contains 2.0 mL of the solution of the test toxin and one of a series of graded volumes of the solution of the reference preparation, in order to confirm the test dose of the toxin. Allow the mixtures to stand at room temperature for 30 min. Using not fewer than 2 mice for each mixture, proceed as described in the preliminary test. The test mixture which contains 1 IU in 0.5 mL is that mixture which kills the same or almost the same number of mice as the reference mixture containing, 1 IU in 0.5 mL. Repeat the determination at least once and calculate the average of all valid estimates. Estimates are valid only if the reference preparation gives a result within 20 per cent of the expected value.

The confidence limits ($P = 0.95$) have been estimated to be:

- 85 per cent and 114 per cent when 2 animals per dose are used;
- 91.5 per cent and 109 per cent when 4 animals per dose are used;
- 93 per cent and 108 per cent when 6 animals per dose are used.

The potency of the finished product is expressed in International Units per millilitre and is shown to be not less than the minimum number stated on the label.

01/2008:0341

CLOSTRIDIUM PERFRINGENS EPSILON ANTITOXIN FOR VETERINARY USE

Immunoserum Clostridii perfringentis epsilon ad usum veterinarium

DEFINITION

Clostridium perfringens epsilon antitoxin for veterinary use is a preparation containing the globulins that have the power of specifically neutralising the epsilon toxin formed by *Clostridium perfringens* type D. It consists of the serum or a preparation obtained from the serum of animals immunised against *C. perfringens* epsilon toxin.

PRODUCTION

CHOICE OF COMPOSITION

The antitoxin is shown to be satisfactory with respect to safety (*5.2.6*) and efficacy (*5.2.7*). For the latter, it shall be demonstrated, for each target species, that the product, when administered at the minimum recommended dose and according to the recommended schedule(s), provides a response or responses consistent with the claims made for the product.

Batch potency test. The test described under Potency is not necessarily carried out for routine testing of batches of antitoxin. It is carried out on one or more occasions as decided by or with the agreement of the competent authority. Where the test is not carried out, a suitable validated alternative test is carried out, the criteria for acceptance being set with reference to a batch of antitoxin that has given satisfactory results in the test described under Potency and that has been shown to be satisfactory with respect to immunogenicity in the target species. The following test may be used after a satisfactory correlation with the test described under Potency has been established.

Determine the level of antibodies against *C. perfringens* epsilon toxin in the batch of antitoxin using a suitable method such as an immunochemical method (*2.7.1*) or neutralisation in cell cultures. Use a homologous reference serum calibrated in International Units of Clostridium perfringens epsilon antitoxin.

The International Unit is the specific neutralising activity for *C. perfringens* epsilon toxin contained in a stated amount of the International Standard, which consists of a quantity of dried immune horse serum. The equivalence in International Units of the International Standard is stated by the World Health Organization.

The potency of the finished product is expressed in International Units per millilitre and is shown to be not less than the minimum number stated on the label.

IDENTIFICATION

The antitoxin is shown, by a suitable immunochemical method (*2.7.1*), to react specifically with the epsilon toxin formed by *C. perfringens*.

POTENCY

The potency of Clostridium perfringens epsilon antitoxin is determined by comparing the dose necessary to protect mice or other suitable animals against the toxic effects of a fixed dose of *C. perfringens* epsilon toxin with the quantity of a reference preparation of Clostridium perfringens epsilon antitoxin, calibrated in International Units, necessary to give the same protection. For this comparison, a suitable preparation of *C. perfringens* epsilon toxin for use as a test toxin is required. The dose of the test toxin is determined in relation to the reference preparation, the potency of the antitoxin to be examined is determined in relation to the reference preparation using the test toxin.

Preparation of test toxin. Prepare the test toxin from a sterile filtrate of an early culture in liquid medium of *C. perfringens* type D and dry by a suitable method. Select the test toxin by determining for mice the L+/10 dose and the LD_{50}, the observation period being 72 h. A suitable epsilon toxin contains not less than one L+/10 dose in 0.005 mg and not less than 20 LD_{50} in each L+/10 dose.

Determination of test dose of toxin. Prepare a solution of the reference preparation in a suitable liquid so that it contains 0.5 IU/mL. Prepare a solution of the test toxin in a suitable liquid so that 1 mL contains a precisely known amount such as 1 mg. Prepare mixtures of the solution of the reference preparation and the solution of the test toxin such that each mixture contains 2.0 mL of the solution of the reference preparation (1 IU), one of a series of graded volumes of the solution of the test toxin and sufficient of a suitable liquid to bring the total volume to 5.0 mL. Allow the mixtures to stand at room temperature for 30 min. Using not fewer than 2 mice, each weighing 17-22 g, for each mixture, inject a dose of 0.5 mL intravenously or intraperitoneally into each mouse. Observe the mice for 72 h. If all the mice die, the amount of toxin present in 0.5 mL of the mixture is in excess of the test dose. If none of the mice die, the amount of toxin present in 0.5 mL of the mixture is less than the test dose. Prepare similar fresh mixtures such that 5.0 mL of each mixture contains 2.0 mL of the solution of the reference preparation (1 IU) and 1 of a series of graded volumes of the solution of the test toxin, separated from each other by steps of not more than 20 per cent and covering the expected end-point. Allow the mixtures to stand at room temperature for 30 min. Using not fewer than 2 mice for each mixture, inject a dose of 0.5 mL intravenously or intraperitoneally into each mouse. Observe the mice for 72 h. Repeat the determination at least once and combine the results of the separate tests that have been made with mixtures of the same composition so that a series of totals is obtained, each total representing the mortality due to a mixture of a given composition. The test dose of the toxin is the amount present in 0.5 mL of that mixture which causes the death of one half of the total number of mice injected with it.

Determination of the potency of the antitoxin to be examined

Preliminary test. Dissolve a quantity of the test toxin in a suitable liquid so that 2.0 mL contains 10 times the test dose (solution of the test toxin). Prepare mixtures of the solution of the test toxin and of the antitoxin to be examined such that each mixture contains 2.0 mL of the solution of the test toxin, one of a series of graded volumes of the antitoxin to be examined and sufficient of a suitable liquid to bring the final volume to 5.0 mL. Allow the mixtures to stand at room temperature for 30 min. Using not fewer than 2 mice for each mixture, inject a dose of 0.5 mL intravenously or intraperitoneally into each mouse. Observe the mice for 72 h. If none of the mice die, 0.5 mL of the mixture contains more than 0.1 IU. If all the mice die, 0.5 mL of the mixture contains less than 0.1 IU.

Final test. Prepare mixtures of the solution of the test toxin and of the antitoxin to be examined such that 5.0 mL of each mixture contains 2.0 mL of the solution of the test toxin and one of a series of graded volumes of the antitoxin to be examined, separated from each other by steps of not more than 20 per cent and covering the expected end-point as determined by the preliminary test. Prepare further mixtures such that 5.0 mL of each mixture contains 2.0 mL of the solution of the test toxin and one of a series of graded volumes of the solution of the reference preparation to confirm the test dose of the toxin. Allow the mixtures to stand at room temperature for 30 min. Using not fewer than 2 mice for each mixture proceed as described in the preliminary test. The test mixture which contains 0.1 IU in 0.5 mL is that mixture which kills the same or almost the same number of mice as the reference mixture containing 0.1 IU in 0.5 mL. Repeat the determination at least once and calculate the average of all valid estimates. Estimates are valid only if the reference preparation gives a result within 20 per cent of the expected value.

The confidence limits ($P = 0.95$) have been estimated to be:

- 85 per cent and 114 per cent when 2 animals per dose are used;
- 91.5 per cent and 109 per cent when 4 animals per dose are used;
- 93 per cent and 108 per cent when 6 animals per dose are used.

The potency of the finished product is expressed in International Units per millilitre and is shown to be not less than the minimum number stated on the label.

01/2008:0343

TETANUS ANTITOXIN FOR VETERINARY USE

Immunoserum tetanicum ad usum veterinarium

DEFINITION

Tetanus antitoxin for veterinary use is a preparation containing principally the globulins that have the power of specifically neutralising the neurotoxin formed by *Clostridium tetani*. It consists of the serum or a preparation obtained from the serum of animals immunised against tetanus toxin.

PRODUCTION

CHOICE OF COMPOSITION

The antitoxin is shown to be satisfactory with respect to safety (*5.2.6*) and efficacy (*5.2.7*). For the latter, it shall be demonstrated, for each target species, that the product, when administered at the minimum recommended dose and according to the recommended schedule(s), provides a response or responses consistent with the claims made for the product. The ability of the product to neutralise the neurotoxin formed by *C. tetani* must also be demonstrated, e.g. by conducting the test in mice as described below.

Demonstration of neurotoxin neutralisation. The ability of tetanus antitoxin to neutralise the neurotoxin of *C. tetani* is determined by establishing the dose necessary to protect mice (or guinea-pigs) against the toxic effects of a fixed dose of tetanus toxin. The test must be conducted in parallel with a test of a reference preparation of tetanus antitoxin, calibrated in International Units, using a quantity expected to give the same protection. The ability of the test antitoxin to neutralise the neurotoxin (potency) can then be expressed in International Units. For this study, a suitable preparation of tetanus toxin for use as a test toxin is required. The dose of the test toxin is determined in relation to the reference preparation; the potency of the antitoxin to be examined is determined in relation to the reference preparation using the test toxin.

Preparation of test toxin. Prepare the test toxin from a sterile filtrate of an 8-10 day culture in liquid medium of *C. tetani*. A test toxin may be prepared by adding this filtrate to *glycerol R* in the proportion of 1 volume of filtrate to 1 to 2 volumes of *glycerol R*. The solution of test toxin may be stored at or slightly below 0 °C. The toxin may also be dried by a suitable method. Select the test toxin by determining for mice the Lp/10 dose and the paralytic dose 50 per cent. A suitable toxin contains not less than 1000 times the paralytic dose 50 per cent in 1 Lp/10 dose.

Lp/10 dose (Limes paralyticum). This is the smallest quantity of toxin which when mixed with 0.1 IU of antitoxin and injected subcutaneously into mice (or guinea-pigs) causes tetanic paralysis in the animals on or before the 4th day after injection.

Paralytic dose 50 per cent. This is the quantity of toxin which when injected subcutaneously into mice (or guinea-pigs) causes tetanic paralysis in one half of the animals on or before the 4th day after injection.

Determination of test dose of toxin. Reconstitute or dilute the reference preparation with a suitable liquid so that it contains 0.5 IU/mL. Measure or weigh a quantity of the test toxin and dilute with or dissolve in a suitable liquid. Prepare mixtures of the solution of the reference preparation and the solution of the test toxin so that each mixture will contain 0.1 IU of antitoxin in the volume chosen for injection and one of a series of graded volumes of the solution of the test toxin, separated from each other by steps of not more than 20 per cent and covering the expected end-point. Adjust each mixture with a suitable liquid to the same final volume (0.4 mL to 0.6 mL if mice are used for the test or 4.0 mL if guinea-pigs are used). Allow the mixtures to stand at room temperature for 60 min. Using not fewer than 2 animals for each mixture, inject the chosen volume subcutaneously into each animal. Observe the animals for 96 h and make daily records of the degree of tetanus developing in each group of animals. Repeat the test at least once and calculate the test dose as the mean of the different tests. The test dose of the toxin is the amount present in that mixture which causes tetanic paralysis in one half of the total number of animals injected with it.

Determination of the neutralising ability of the antitoxin to be examined

Preliminary test. Measure or weigh a quantity of the test toxin and dilute with or dissolve in a suitable liquid so that the solution contains 5 test doses per millilitre (solution of the test toxin). Prepare mixtures of the solution of the test toxin and of the antitoxin to be examined so that for each mixture the volume chosen for injection contains the test dose of toxin and one of a series of graded volumes of the antitoxin to be examined. Adjust each mixture to the same final volume with a suitable liquid. Allow the mixtures to stand at room temperature for 60 min. Using not fewer than 2 animals for

each mixture, inject the chosen volume subcutaneously into each animal. Observe the animals for 96 h and make daily records of the degree of tetanus developing in each group of animals. Using the results, select suitable mixtures for the final test.

Final test. Prepare mixtures of the solution of the test toxin and of the antitoxin to be examined so that for each mixture the volume chosen for the injection contains the test dose of toxin and one of a series of graded volumes of the antitoxin to be examined, separated from each other by steps of not more than 20 per cent and covering the expected end-point as determined in the preliminary test. Prepare further mixtures with the same amount of test toxin and graded volumes of the reference preparation, centred on 0.1 IU in the volume chosen for injection, to confirm the test dose of the toxin. Adjust each mixture to the same final volume with a suitable liquid. Allow the mixtures to stand at room temperature for 60 min. Using not fewer than 2 animals for each mixture, inject the chosen volume subcutaneously into each animal. Observe the animals for 96 h and make daily records of the degree of tetanus developing in each group of animals. The test mixture which contains 0.1 IU in the volume injected is that mixture which causes tetanic paralysis in the same, or almost the same, number of animals as the reference mixture containing 0.1 IU in the volume injected. Repeat the determination at least once and calculate the mean of all valid estimates. Estimates are valid only if the reference preparation gives a result within 20 per cent of the expected value.

The confidence limits (P = 0.95) have been estimated to be:

- 85 per cent and 114 per cent when 2 animals per dose are used;
- 91.5 per cent and 109 per cent when 3 animals per dose are used;
- 93 per cent and 108 per cent when 6 animals per dose are used.

IDENTIFICATION

The antitoxin is shown, by a suitable immunochemical method (*2.7.1*), to react specifically with the neurotoxin formed by *C. tetani*. The potency test may also serve for identification.

POTENCY

Determine the titre of antibodies against the neurotoxin formed by *C. tetani* using a suitable immunochemical method (*2.7.1*) such as a toxin-binding-inhibition test (ToBI test) and a homologous reference serum, calibrated in International Units per millilitre.

The International Unit is the specific neutralising activity for tetanus toxin contained in a stated amount of the International Standard which consists of a quantity of dried immune horse serum. The equivalence in International Units of the International Standard is stated by the World Health Organization.

The potency of the finished product is expressed in International Units per millilitre and is shown to be not less than the minimum number stated on the label.

01/2014:2460

ALOVUDINE (^{18}F) INJECTION

Alovudini (^{18}F) solutio iniectabilis

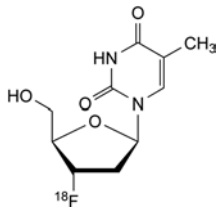

$C_{10}H_{13}{}^{18}FN_2O_4$ M_r 243.2

DEFINITION

Sterile solution containing 1-[(2*R*,4*S*,5*R*)-4-[^{18}F]fluoro-5-(hydroxymethyl)tetrahydrofuran-2-yl]-5-methylpyrimidine-2,4(1*H*,3*H*)-dione (3′-deoxy-3′-[^{18}F]fluorothymidine, [^{18}F]fluorodeoxythymidine, [^{18}F]FLT). It may contain a suitable buffer.

Content:

- *fluorine-18*: 90 per cent to 110 per cent of the declared fluorine-18 radioactivity at the date and time stated on the label;
- *alovudine*: maximum 0.1 mg per maximum recommended dose in millilitres.

CHARACTERS

Appearance: clear, colourless or slightly yellow solution.

Half-life and nature of radiation of fluorine-18: see general chapter *5.7. Table of physical characteristics of radionuclides*.

IDENTIFICATION

A. Gamma-ray spectrometry.

Result: the principal gamma photons have an energy of 0.511 MeV and, depending on the measurement geometry, a sum peak of 1.022 MeV may be observed.

B. Determine the approximate half-life by no fewer than 3 measurements of the activity of a sample in the same geometrical conditions within a suitable period of time (for example, 30 min).

Result: 105 min to 115 min.

C. Examine the chromatograms obtained in the test for [^{18}F]alovudine under radiochemical purity (see Tests).

Result: the principal peak in the radiochromatogram obtained with the test solution is similar in retention time to the principal peak in the chromatogram obtained with reference solution (a).

TESTS

pH: 4.5 to 8.5, using a *pH indicator strip R*.

Impurity A. Spot test.

Test solution. To 100 µL of the preparation to be examined add 400 µL of *water R* and mix.

Reference solution (a): *water R*.

Reference solution (b). Dissolve 11.0 mg of *aminopolyether R* (impurity A) in *water R* and dilute to 25.0 mL with the same solvent. Dilute 1.0 mL of the solution to *V* with *water R*, *V* being the maximum recommended dose in millilitres.

Plate: *TLC silica gel plate for aminopolyether test R*.

Application: 2.5 µL; as an additional spot, apply 2.5 µL of the test solution and then 2.5 µL of reference solution (b) at the same place.

Detection: visually compare the spots 1 min after application.

System suitability:

- the spot due to the application of both the test solution and reference solution (b) is similar in appearance to the spot due to reference solution (b), which is characterised by a number of concentric circles; the darker innermost circle (of intensity proportional to the concentration of impurity A) may be surrounded by a bluish-black ring, outside of which is a lighter circle surrounded by a peripheral dark edge;
- the spot due to reference solution (a) has a more diffuse inner circle, which is brownish-pink and without a distinct margin between it and the surrounding lighter zone;
- the spot due to reference solution (b) is clearly different from the spot due to reference solution (a).

Limit:

- the central portion of the spot due to the test solution is not more intense than that of the spot due to reference solution (b) (2.2 mg/*V*).

Impurity B. Liquid chromatography (*2.2.29*).

Test solution. The preparation to be examined.

Reference solution (a). Dissolve 0.170 g of *tetrabutylammonium hydroxide R* in *water R* and dilute to 20.0 mL with the same solvent. Dilute 1.0 mL of the solution to *V* with *water R*, *V* being the maximum recommended dose in millilitres.

Reference solution (b). Dissolve 80.0 mg of *tetrabutylammonium hydroxide R* in *water R* and dilute to 10.0 mL with the same solvent. Dilute 1.0 mL of the solution to 25.0 mL with *water R*.

Column:

- *size*: *l* = 0.1 m, Ø = 4.6 mm;
- *stationary phase*: *octadecylsilyl silica gel for chromatography R* (3 µm).

Mobile phase: 0.95 g/L solution of *toluenesulfonic acid R*, *acetonitrile R* (25:75 *V*/*V*).

Flow rate: 0.6 mL/min.

Detection: spectrophotometer at 254 nm.

Injection: 20 µL.

Run time: twice the retention time of impurity B.

Retention time: impurity B = about 3.3 min.

System suitability: reference solution (b):

- *signal-to-noise ratio*: minimum 10 for the principal peak;
- *symmetry factor*: maximum 1.8 for the principal peak.

Limit:

- *impurity B*: not more than the area of the corresponding peak in the chromatogram obtained with reference solution (a) (2.6 mg/*V*).

Alovudine and related substances. Liquid chromatography (*2.2.29*).

Test solution. The preparation to be examined.

Reference solution (a). Dissolve 5.0 mg of *alovudine R* in *water R* and dilute to 50.0 mL with the same solvent. Dilute 1.0 mL of the solution to *V* with *water R*, *V* being the maximum recommended dose in millilitres.

Reference solution (b). Dissolve 5.0 mg of *stavudine R* (impurity C) in *water R* and dilute to 50.0 mL with the same solvent. Dilute 1.0 mL of the solution to *V* with *water R*, *V* being the maximum recommended dose in millilitres.

Reference solution (c). Mix 1 mL of reference solution (a) and 1 mL of reference solution (b).

Blank solution. Prepare a solution containing each excipient at the concentration used in the preparation.

Column:

- *size*: *l* = 0.25 m, Ø = 4.6 mm;
- *stationary phase*: *end-capped polar-embedded octadecylsilyl amorphous organosilica polymer R* (5 µm).

Mobile phase:

- *mobile phase A*: *carbon dioxide-free water R*, protected from the atmosphere during chromatography;
- *mobile phase B*: *acetonitrile R*;

Time (min)	Mobile phase A (per cent *V/V*)	Mobile phase B (per cent *V/V*)
0 - 10	90	10
10 - 20	90 → 5	10 → 95
20 - 30	5	95

Flow rate: 1 mL/min.

Detection: spectrophotometer at 270 nm and radioactivity detector connected in series.

Injection: 20 µL.

Relative retention with reference to alovudine (retention time = about 8 min): impurity C = about 0.6.

System suitability: reference solution (c) using the spectrophotometer:

- *resolution*: minimum 5.0 between the peaks due to impurity C and alovudine.

Limits: in the chromatogram obtained with the spectrophotometer:

- *alovudine*: not more than the area of the corresponding peak in the chromatogram obtained with reference solution (a) (0.1 mg/*V*);
- *impurity C*: not more than the area of the corresponding peak in the chromatogram obtained with reference solution (b) (0.1 mg/*V*);
- *any other impurity*: for each impurity, not more than the area of the principal peak in the chromatogram obtained with reference solution (a) (0.1 mg/*V*);
- *total*: not more than 5 times the area of the principal peak in the chromatogram obtained with reference solution (a) (0.5 mg/*V*);
- *disregard limit*: 0.3 times the area of the principal peak in the chromatogram obtained with reference solution (a) (0.03 mg/*V*).

Ethanol (*2.4.24* or another suitable, validated method): maximum 10 per cent *V/V* and maximum 2.5 g per administration, taking the density (*2.2.5*) to be 0.790 g/mL.

Residual solvents: limited according to the principles defined in general chapter *5.4*. The preparation may be released for use before completion of the test.

Sterility. It complies with the test for sterility prescribed in the monograph *Radiopharmaceutical preparations (0125)*. The preparation may be released for use before completion of the test.

Bacterial endotoxins (*2.6.14*): less than 175/*V* IU/mL, *V* being the maximum recommended dose in millilitres. The preparation may be released for use before completion of the test.

RADIONUCLIDIC PURITY

The preparation may be released for use before completion of test B.

Fluorine-18: minimum 99.9 per cent of the total radioactivity.

A. Gamma-ray spectrometry.

Limit: peaks in the gamma spectrum corresponding to photons with an energy different from 0.511 MeV or 1.022 MeV represent not more than 0.1 per cent of the total radioactivity.

B. Gamma-ray spectrometry.

Determine the amount of fluorine-18 and radionuclidic impurities with a half-life longer than 2 h. For the detection and quantification of impurities, retain the preparation to be examined for at least 24 h to allow the fluorine-18 to decay to a level that permits the detection of impurities.

Result: the total radioactivity due to radionuclidic impurities is not more than 0.1 per cent.

RADIOCHEMICAL PURITY

[18F]Alovudine. Liquid chromatography (*2.2.29*) as described in the test for alovudine and related substances. If necessary, dilute the test solution with *water R* to obtain a radioactivity concentration suitable for the radioactivity detector.

Examine the chromatogram recorded using the radioactivity detector and locate the peak due to [18F]alovudine by comparison with the chromatogram obtained with reference solution (a) using the spectrophotometer.

Limit:

- *[18F]alovudine*: minimum 95 per cent of the total radioactivity due to fluorine-18.

Impurity D. Thin-layer chromatography (*2.2.27*).

Test solution. The preparation to be examined.

Plate: *TLC silica gel plate R*.

Mobile phase: *water R*, *acetonitrile R* (5:95 *V/V*).

Application: about 5 µL.

Development: over 2/3 of the plate.

Drying: in a current of warm air.

Detection: suitable detector to determine the distribution of radioactivity.

Retardation factors: impurity D = about 0; [18F]alovudine = about 0.7.

Limit:

- *impurity D*: maximum 5 per cent of the total radioactivity due to fluorine-18.

RADIOACTIVITY

Determine the radioactivity using a calibrated instrument.

LABELLING

The label states the percentage content of ethanol in the preparation.

IMPURITIES

Specified impurities: *A, B, C, D*.

Other detectable impurities (the following substances would, if present at a sufficient level, be detected by one or other of the tests in the monograph. They are limited by the general acceptance criterion for other/unspecified impurities. It is therefore not necessary to identify these impurities for demonstration of compliance): *E, F*.

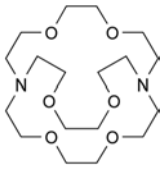

A. 4,7,13,16,21,24-hexaoxa-1,10-diazabicyclo[8.8.8]-hexacosane (aminopolyether),

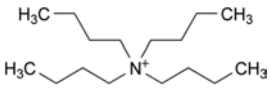

B. *N,N,N*-tributylbutan-1-aminium (tetrabutylammonium),

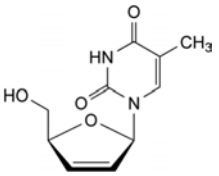

C. 1-[(2*R*,5*S*)-5-(hydroxymethyl)-2,5-dihydrofuran-2-yl]-5-methylpyrimidine-2,4(1*H*,3*H*)-dione (stavudine),

D. [^{18}F]fluoride,

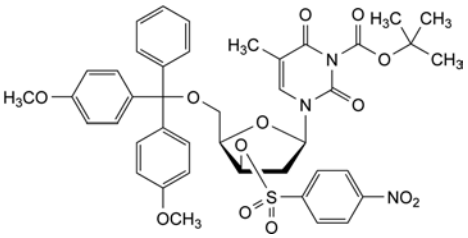

E. *tert*-butyl 3-[(2*R*,4*R*,5*R*)-5-[[bis(4-methoxyphenyl)phenylmethoxy]methyl]-4-[[(4-nitrophenyl)sulfonyl]oxy]tetrahydrofuran-2-yl]-5-methyl-2,6-dioxo-3,6-dihydropyrimidine-1(2*H*)-carboxylate,

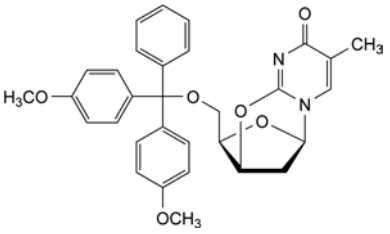

F. (2*R*,3*R*,5*R*)-3-[[bis(4-methoxyphenyl)phenylmethoxy]methyl]-8-methyl-2,3-dihydro-9*H*-2,5-methanopyrimido-[2,1-*b*][1,5,3]dioxazepin-9-one.

01/2008:1492
corrected 7.0

AMMONIA (^{13}N) INJECTION

Ammoniae (^{13}N) solutio iniectabilis

DEFINITION

Sterile solution of [^{13}N]ammonia for diagnostic use.

Nitrogen-13: 90 per cent to 110 per cent of the declared nitrogen-13 radioactivity at the date and time stated on the label.

CHARACTERS

Appearance: clear, colourless solution.

Half-life and nature of radiation of nitrogen-13: see general chapter *5.7. Table of physical characteristics of radionuclides*.

IDENTIFICATION

A. Gamma-ray spectrometry.

Results: the only gamma photons have an energy of 0.511 MeV and, depending on the measurement geometry, a sum peak of 1.022 MeV may be observed.

B. Test A for radionuclidic purity (see Tests).

C. Examine the chromatograms obtained in the test for radiochemical purity (see Tests).

Result: the principal peak in the radiochromatogram obtained with the test solution has approximately the same retention time as the principal peak in the radiochromatogram obtained with the reference solution.

TESTS

pH (*2.2.3*): 5.5 to 8.5.

Sterility. It complies with the test for sterility prescribed in the monograph *Radiopharmaceutical preparations (0125)*. The preparation may be released for use before completion of the test.

Bacterial endotoxins (*2.6.14*): less than 175/*V* IU/mL, *V* being the maximum recommended dose in millilitres. The preparation may be released for use before completion of the test.

Aluminium: maximum 2 ppm. The preparation may be released for use before completion of the test.

Test solution. In a test-tube about 12 mm in internal diameter, mix 1 mL of *acetate buffer solution pH 4.6 R* and 2 mL of a 1 in 20 dilution of the preparation to be examined in *water R*. Add 0.05 mL of a 10 g/L solution of *chromazurol S R*.

Reference solution. Prepare at the same time and in the same manner as the test solution using 2 mL of a 1 in 20 dilution of *aluminium standard solution (2 ppm Al) R*.

After 3 min, the colour of the test solution is not more intense than that of the reference solution.

RADIONUCLIDIC PURITY

The preparation may be released for use before completion of tests A and B.

A. *Half-life*. The half-life is between 9 min and 11 min.

B. *Gamma emitting impurities*: maximum 1.0 per cent of the total radioactivity.

Gamma-ray spectrometry. Retain a sample of the preparation to be examined for 2 h. Examine the gamma-ray spectrum of the decayed material for the presence of radionuclidic impurities, which should, where possible, be identified and quantified.

RADIOCHEMICAL PURITY

[^{13}N]Ammonia. Liquid chromatography (*2.2.29*).

The preparation may be released for use before completion of the test.

Test solution. The preparation to be examined.

Reference solution. Dilute 1.0 mL of *dilute ammonia R2* to 10.0 mL with *water R*.

Column:

- *size*: *l* = 0.04 m, Ø = 4.0 mm;
- *stationary phase*: *cation-exchange resin R* (10 µm);
- *temperature*: constant at 20-30 °C.

Mobile phase: *0.002 M nitric acid*.

Flow rate: 2 mL/min.

Detection: suitable radioactivity detector and conductivity detector.

System suitability: the chromatogram obtained with the test solution and the radioactivity detector shows a principal peak with approximately the same retention time as the peak in the chromatogram obtained with the reference solution and the conductivity detector.

Limit:

- *[^{13}N]ammonia*: minimum 99 per cent of the total radioactivity due to nitrogen-13.

RADIOACTIVITY

Determine the radioactivity using a calibrated instrument.

IMPURITIES

A. [^{13}N]O_2^-,

B. [^{13}N]O_3^-,

C. [^{18}F$^-$],

D. H_2[^{15}O].

Radiopharmaceutical preparations

01/2008:1607

CARBON MONOXIDE (^{15}O)

Carbonei monoxidum (^{15}O)

DEFINITION

Mixture of carbon [^{15}O]monoxide in the gaseous phase and a suitable vehicle such as *Medicinal air (1238)*, for diagnostic use.

Purity:

- minimum 99 per cent of the total radioactivity corresponds to oxygen-15,
- minimum 97 per cent of the total radioactivity corresponds to oxygen-15 in the form of carbon monoxide (CO).

PRODUCTION

RADIONUCLIDE PRODUCTION

Oxygen-15 is a radioactive isotope of oxygen which may be produced by various nuclear reactions such as proton irradiation of nitrogen-15 or deuteron irradiation of nitrogen-14.

RADIOCHEMICAL SYNTHESIS

In order to recover oxygen-15 as molecular oxygen from the nitrogen target gas, carrier oxygen is added at concentrations generally ranging from 0.2 per cent *V/V* to 1.0 per cent *V/V*. After irradiation, the target gas is usually reacted with activated charcoal at a temperature of about 950 °C. The activated charcoal is preconditioned before use by flushing an inert gas at the production flow rate at a temperature of about 950 °C for not less than 1 h. The carbon [^{15}O]monoxide obtained is purified by passage through a carbon dioxide scavenger, such as soda lime, before mixing with the vehicle.

CHARACTERS

Appearance: colourless gas.

Half-life and nature of radiation of oxygen-15: see general chapter *5.7. Table of physical characteristics of radionuclides*.

IDENTIFICATION

A. Gamma spectrometry.

Results: the only gamma photons have an energy of 0.511 MeV and, depending on the measurement geometry, a sum peak of 1.022 MeV may be observed.

B. Radionuclidic purity (see Tests).

C. Examine the chromatograms obtained in the test for radiochemical purity.

Results: the principal peaks in the chromatogram obtained with the test gas using the radioactivity detector are similar in retention times to the principal peaks corresponding to carbon monoxide in the chromatogram obtained with reference gas (a) using the thermal conductivity detector.

TESTS

The following tests are performed on carbon [^{15}O]monoxide as described under radiochemical synthesis before mixing with the vehicle.

Carbon monoxide. Gas chromatography (*2.2.28*) as described in the test for radiochemical purity.

The concentration of carbon monoxide in the test sample is determined before administration and is used to calculate the amount of carbon monoxide to be administered to the patient.

Injection: test sample, reference gas (b).

Examine the chromatogram obtained with the thermal conductivity detector and calculate the content of carbon monoxide.

RADIONUCLIDIC PURITY

Oxygen-15: minimum 99 per cent of the total radioactivity.

A. Gamma spectrometry.

Comparison: standardised fluorine-18 solution, or by using an instrument calibrated with the aid of such a solution. Standardised fluorine-18 solutions and/or standardisation services are available from the competent authority.

Results: the spectrum obtained with the solution to be examined does not differ significantly from that obtained with a standardised fluorine-18 solution.

B. Half-life: 1.9 min to 2.2 min.

The preparation may be released for use before completion of the test.

RADIOCHEMICAL PURITY

Carbon [^{15}O]monoxide. Gas chromatography (*2.2.28*): use the normalisation procedure.

Test sample. Carbon [^{15}O]monoxide as described under radiochemical synthesis.

Reference gas (a). Nitrogen gas mixture R.

Reference gas (b). Nitrogen R, containing 2.0 per cent *V/V* of *carbon monoxide R1*.

Column:

- *size*: *l* = 1.8 m, Ø1 = 6.3 mm and Ø2 = 3.2 mm,
- *stationary phase*: *GC concentrical column R*,

Carrier gas: *helium for chromatography R*.

Flow rate: 65 mL/min.

Temperature:

- *column*: 40 °C,
- *injection port*: 40 °C,
- *thermal conductivity detector*: 70 °C.

Detection: thermal conductivity detector and radioactivity detector connected in series.

Injection: loop injector.

Run time: 10 min.

Retention times: oxygen, nitrogen and carbon monoxide eluting from the inner column = about 0.4 min; carbon dioxide eluting from the inner column = about 0.8 min; oxygen eluting from the outer column = about 2.1 min; nitrogen eluting from the outer column = about 3.1 min; carbon monoxide eluting from the outer column = about 6.2 min.

System suitability: reference gas (a):

- 5 clearly separated principal peaks are observed in the chromatogram obtained using the thermal conductivity detector,
- *resolution*: minimum of 1.5 between the peaks due to carbon dioxide eluting from the inner column and oxygen eluting from the outer column, in the chromatogram obtained using the thermal conductivity detector.

Limits: examine the chromatogram obtained with the radioactivity detector and calculate the percentage content of oxygen-15 substances from the peak areas.

- *carbon [^{15}O]monoxide*: minimum 97 per cent of the total radioactivity.
- *disregard* the first peak corresponding to components co-eluting from the inner column.

RADIOACTIVITY

The radioactive concentration is determined before administration.

Measure the radioactivity using suitable equipment by comparison with a standardised fluorine-18 solution or by measurement in an instrument calibrated with the aid of such a solution.

07/2008:0266
corrected 7.0

CHROMIUM (^{51}Cr) EDETATE INJECTION

Chromii (^{51}Cr) edetatis solutio iniectabilis

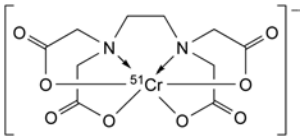

DEFINITION

Sterile solution containing chromium-51 in the form of a complex of chromium(III) with (ethylenedinitrilo)tetraacetic acid, the latter being present in excess. It may be made isotonic by the addition of sodium chloride and may contain a suitable antimicrobial preservative such as benzyl alcohol.

Chromium-51: 90 per cent to 110 per cent of the declared chromium-51 radioactivity at the date and time stated on the label.

Chromium: maximum 1 mg/mL.

CHARACTERS

Appearance: clear, violet solution.

Half-life and nature of radiation of chromium-51: see general chapter *5.7. Table of physical characteristics of radionuclides*.

IDENTIFICATION

A. Radionuclidic purity (see Tests).

B. Examine the chromatograms obtained in the test for radiochemical purity (see Tests).

Result: the principal peak in the radiochromatogram obtained with the test solution is similar in retardation factor to the principal peak in the chromatogram obtained with the reference solution.

TESTS

pH (*2.2.3*): 3.5 to 6.5.

Chromium: maximum 1 mg/mL.

Ultraviolet and visible absorption spectrophotometry (*2.2.25*).

Test solution. The preparation to be examined.

Reference solution. Dissolve 0.96 g of *chromic potassium sulfate R* and 2.87 g of *sodium edetate R* in 50 mL of *water R*, boil for 10 min, cool, adjust to pH 3.5-6.5 with *dilute sodium hydroxide solution R* and dilute to 100.0 mL with *water R*.

Measure the absorbance of the test solution and the reference solution at the absorption maximum at 560 nm.

Result: the absorbance of the test solution is not greater than that of the reference solution.

Sterility. It complies with the test for sterility prescribed in the monograph *Radiopharmaceutical preparations (0125)*. The preparation may be released for use before completion of the test.

RADIONUCLIDIC PURITY

Chromium-51: minimum 99.9 per cent of the total radioactivity.

A. Gamma-ray spectrometry.

Results: the only gamma photons have an energy of 0.320 MeV.

B. Gamma-ray spectrometry.

Determine the relative amount of radionuclidic impurities.

Results: the total radioactivity due to radionuclidic impurities is not more than 0.1 per cent.

RADIOCHEMICAL PURITY

[^{51}Cr]Chromium edetate. Descending paper chromatography (*2.2.26*).

Test solution. The preparation to be examined.

Reference solution. Use the reference solution from the test for chromium.

Chromate carrier solution. Dissolve 0.1 g of *potassium chromate R* in 1 mL of *concentrated ammonia R1* and dilute to 100 mL with *water R*.

Paper: *paper for chromatography R*.

Mobile phase: *concentrated ammonia R1*, *ethanol (96 per cent) R*, *water R* (1:2:5 *V/V/V*).

Application. Apply a band of a 50 g/L solution of *lead acetate R* to the paper at about 4 cm from the origin and dry in hot air. Apply 10 µL of the chromate carrier solution at the origin, followed by 10 µL of the test solution on the same spot. On a separate sheet, repeat the above procedure, applying 10 µL of the reference solution instead of the test solution.

Development: immediately, over a path of 14 cm.

Drying: in air.

Detection: suitable detector to determine the distribution of radioactivity.

Retardation factors: impurity A = 0; impurity B = 0.2 to 0.4; [^{51}Cr]chromium edetate = 0.8 to 0.9.

System suitability. The band of lead acetate turns yellow due to reaction with the chromate carrier solution. The retardation factor of the radioactive spot due to [^{51}Cr]chromium edetate in the radiochromatogram obtained with the test solution is similar to that of the violet spot in the chromatogram obtained with the reference solution.

Limit:

– *[^{51}Cr]chromium edetate*: minimum 97.0 per cent of the total radioactivity due to chromium-51.

RADIOACTIVITY

Determine the radioactivity using a calibrated instrument.

IMPURITIES

A. [^{51}Cr]chromium(III) ion,

B. [^{51}Cr]chromate ion.

01/2008:0710
corrected 7.0

CYANOCOBALAMIN (^{57}Co) CAPSULES

Cyanocobalamini (^{57}Co) capsulae

DEFINITION

Capsules containing [^{57}Co]-α-(5,6-dimethylbenzimidazol-1-yl)cobamide cyanide; they may contain suitable excipients.

The capsules comply with the requirements for hard capsules prescribed in the monograph *Capsules (0016)*, unless otherwise justified and authorised.

Cobalt-57: 90 per cent to 110 per cent of the declared cobalt-57 radioactivity at the date stated on the label.

CHARACTERS

Appearance: hard, gelatin capsules.

Half-life and nature of radiation of cobalt-57: see general chapter *5.7. Table of physical characteristics of radionuclides*.

IDENTIFICATION

A. Gamma-ray spectrometry.

Result: the most prominent gamma photon of cobalt-57 has an energy of 0.122 MeV.

B. Examine the chromatograms obtained in the test for radiochemical purity (see Tests).

Radiopharmaceutical preparations

Result: the principal peak in the radiochromatogram obtained with the test solution is similar in retention time to the principal peak in the chromatogram obtained with the reference solution.

TESTS

Disintegration. The capsules comply with the test for disintegration of tablets and capsules (*2.9.1*), except that 1 capsule is used in the test instead of 6.

Uniformity of content. Determine, by measurement in a suitable counting assembly and under identical geometrical conditions, the radioactivity of each of not fewer than 10 capsules. Calculate the average radioactivity per capsule. The radioactivity of no capsule differs by more than 10 per cent from the average. The relative standard deviation is less than 3.5 per cent.

RADIONUCLIDIC PURITY

Cobalt-57: minimum 99.9 per cent of the total radioactivity.

Gamma-ray spectrometry.

Determine the relative amounts of cobalt-57, cobalt-56 and cobalt-58 present.

RADIOCHEMICAL PURITY

[^{57}Co]Cyanocobalamin. Liquid chromatography (*2.2.29*).

Test solution. Dissolve the contents of a capsule in 1.0 mL of *water R* and allow to stand for 10 min. Centrifuge at 2000 r/min for 10 min. Use the supernatant.

Reference solution. Dissolve 10 mg of *cyanocobalamin CRS* in the mobile phase and dilute to 100 mL with the mobile phase. Dilute 2 mL of this solution to 100 mL with the mobile phase. *Use within 1 h of preparation.*

Column:

- *size*: *l* = 0.25 m, Ø = 4.0 mm;
- *stationary phase*: *octylsilyl silica gel for chromatography R* (5 µm).

Mobile phase: 26.5 volumes of *methanol R* and 73.5 volumes of a 10 g/L solution of *disodium hydrogen phosphate R* adjusted to pH 3.5 using *phosphoric acid R. Use within 2 days of preparation.*

Flow rate: 1.0 mL/min.

Detection: radioactivity detector adjusted for cobalt-57 and spectrophotometer at 361 nm.

Injection: 100 µL.

Run time: 3 times the retention time of cyanocobalamin for the test solution; 30 min for the reference solution.

Limit:

- *[^{57}Co]cyanocobalamin*: minimum 90 per cent of the total radioactivity due to cobalt-57.

RADIOACTIVITY

Determine the radioactivity using a calibrated instrument.

STORAGE

In an airtight container, protected from light, at a temperature of 2 °C to 8 °C.

IMPURITIES

A. cobalt-56,

B. cobalt-58.

01/2008:0269
corrected 7.0

CYANOCOBALAMIN (^{57}Co) SOLUTION

Cyanocobalamini (^{57}Co) solutio

DEFINITION

Solution of [^{57}Co]-α-(5,6-dimethylbenzimidazol-1-yl)cobamide cyanide and may contain a stabiliser and an antimicrobial preservative.

Cobalt-57: 90 per cent to 110 per cent of the declared cobalt-57 radioactivity at the date stated on the label.

CHARACTERS

Appearance: clear, colourless or slightly pink solution.

Half-life and nature of radiation of cobalt-57: see general chapter *5.7. Table of physical characteristics of radionuclides.*

IDENTIFICATION

A. Gamma-ray spectrometry.

Result: the most prominent gamma photon of cobalt-57 has an energy of 0.122 MeV.

B. Examine the chromatograms obtained in the test for radiochemical purity (see Tests).

Result: the principal peak in the radiochromatogram obtained with the test solution is similar in retention time to the principal peak in the chromatogram obtained with the reference solution.

TESTS

pH (*2.2.3*): 4.0 to 6.0.

RADIONUCLIDIC PURITY

Cobalt-57: minimum 99.9 per cent of the total radioactivity.

Gamma-ray spectrometry.

Determine the relative amounts of cobalt-57, cobalt-56 and cobalt-58 present.

RADIOCHEMICAL PURITY

[^{57}Co]Cyanocobalamin. Liquid chromatography (*2.2.29*).

Test solution. The preparation to be examined.

Reference solution. Dissolve 10 mg of *cyanocobalamin CRS* in the mobile phase and dilute to 100 mL with the mobile phase. Dilute 2 mL of this solution to 100 mL with the mobile phase. *Use within 1 h after preparation.*

Column:

- *size*: *l* = 0.25 m, Ø = 4.0 mm;
- *stationary phase*: *octylsilyl silica gel for chromatography R* (5 µm).

Mobile phase: 26.5 volumes of *methanol R* and 73.5 volumes of a 10 g/L solution of *disodium hydrogen phosphate R* adjusted to pH 3.5 using *phosphoric acid R* (use within 2 days after preparation).

Flow rate: 1.0 mL/min.

Detection: radioactivity detector adjusted for cobalt-57 and spectrophotometer at 361 nm.

Injection: 100 µL.

Run time: 3 times the retention time of cyanocobalamin for the test solution; 30 min for the reference solution.

Limit:

- *[^{57}Co]cyanocobalamin*: minimum 90 per cent of the radioactivity due to cobalt-57.

RADIOACTIVITY

Determine the radioactivity using a calibrated instrument.

STORAGE

Protected from light, at a temperature of 2 °C to 8 °C.

IMPURITIES

A. cobalt-56,

B. cobalt-58.

01/2008:1505
corrected 7.0

CYANOCOBALAMIN (^{58}Co) CAPSULES

Cyanocobalamini (^{58}Co) capsulae

DEFINITION

Capsules containing [^{58}Co]-α-(5,6-dimethylbenzimidazol-1-yl)cobamide cyanide; they may contain suitable excipients.

The capsules comply with the requirements for hard capsules in the monograph *Capsules (0016)*, unless otherwise justified and authorised.

Cobalt-58: average between 90 per cent and 110 per cent of the declared cobalt-58 radioactivity at the date stated on the label.

CHARACTERS

Appearance: hard gelatin capsules.

Half-life and nature of radiation of cobalt-58: see general chapter *5.7. Table of physical characteristics of radionuclides*.

IDENTIFICATION

A. Gamma-ray spectrometry.

Results: the most prominent gamma photons of cobalt-58 have energies of 0.511 MeV (annihilation radiation) and 0.811 MeV.

B. Examine the chromatograms obtained in the test for radiochemical purity (see Tests).

Result: the principal peak in the radiochromatogram obtained with the test solution is similar in retention time to the principal peak in the chromatogram obtained with the reference solution.

TESTS

Disintegration. The capsules comply with the test for disintegration of tablets and capsules (*2.9.1*) except that 1 capsule is used in the test instead of 6.

Uniformity of content. Determine by measurement in a suitable counting assembly and under identical geometrical conditions the radioactivity of each of not less than 10 capsules. Calculate the average radioactivity per capsule. The radioactivity of no capsule differs by more than 10 per cent from the average. The relative standard deviation is less than 3.5 per cent.

RADIONUCLIDIC PURITY

Cobalt-58: minimum 98 per cent of the total radioactivity.

Gamma-ray spectrometry.

Determine the relative amounts of cobalt-58, cobalt-57 and cobalt-60 present.

Result:

– *cobalt-60*: maximum 1 per cent of the total radioactivity.

RADIOCHEMICAL PURITY

[^{58}Co]Cyanocobalamin. Liquid chromatography (*2.2.29*).

Test solution. Dissolve the contents of a capsule in 1.0 mL of *water R* and allow to stand for 10 min. Centrifuge at 2000 r/min for 10 min. Use the supernatant.

Reference solution. Dissolve 10 mg of *cyanocobalamin CRS* in the mobile phase and dilute to 100 mL with the mobile phase. Dilute 2 mL of this solution to 100 mL with the mobile phase. *Use within 1 h after preparation.*

Column:

– *size*: *l* = 0.25 m, Ø = 4.0 mm;

– *stationary phase*: *octylsilyl silica gel for chromatography R* (5 µm).

Mobile phase: 26.5 volumes of *methanol R* and 73.5 volumes of a 10 g/L solution of *disodium hydrogen phosphate R*, adjusted to pH 3.5 with *phosphoric acid R* (use within 2 days).

Flow rate: 1.0 mL/min.

Detection: radioactivity detector adjusted for cobalt-58 and spectrophotometer at 361 nm.

Injection: 100 µL.

Run time: 3 times the retention time of cyanocobalamin for the test solution; 30 min for the reference solution.

Limit:

– *[^{58}Co]cyanocobalamin*: minimum 84 per cent of the total radioactivity due to cobalt-58.

RADIOACTIVITY

Determine the radioactivity using a calibrated instrument.

STORAGE

In an airtight container, protected from light, at a temperature of 2 °C to 8 °C.

IMPURITIES

A. cobalt-57,

B. cobalt-60.

01/2008:0270
corrected 7.0

CYANOCOBALAMIN (^{58}Co) SOLUTION

Cyanocobalamini (^{58}Co) solutio

DEFINITION

Solution of [^{58}Co]-α-(5,6-dimethylbenzimidazol-1-yl)cobamide cyanide and may contain a stabiliser and an antimicrobial preservative.

Cobalt-58: 90 per cent to 110 per cent of the declared cobalt-58 radioactivity at the date stated on the label.

CHARACTERS

Appearance: clear, colourless or slightly pink solution.

Half-life and nature of radiation of cobalt-58: see general chapter *5.7. Table of physical characteristics of radionuclides*.

IDENTIFICATION

A. Gamma-ray spectrometry.

Results: the most prominent gamma photons of cobalt-58 have energies of 0.511 MeV (annihilation radiation) and 0.811 MeV.

B. Examine the chromatograms obtained in the test for radiochemical purity (see Tests).

Result: the principal peak in the radiochromatogram obtained with the test solution is similar in retention time to the principal peak in the chromatogram obtained with the reference solution.

TESTS

pH (*2.2.3*): 4.0 to 6.0.

RADIONUCLIDIC PURITY

Cobalt-58: minimum 98 per cent of the total radioactivity.

Gamma-ray spectrometry.

Determine the relative amounts of cobalt-58, cobalt-57 and cobalt-60 present.

Result:

– *cobalt-60*: maximum 1 per cent of the total radioactivity.

Radiopharmaceutical preparations

RADIOCHEMICAL PURITY

[^{58}Co]Cyanocobalamin. Liquid chromatography (*2.2.29*).

Test solution. The preparation to be examined.

Reference solution. Dissolve 10 mg of *cyanocobalamin CRS* in the mobile phase and dilute to 100 mL with the mobile phase. Dilute 2 mL of this solution to 100 mL with the mobile phase. *Use within 1 h after preparation*.

Column:

- *size*: *l* = 0.25 m, Ø = 4.0 mm;
- *stationary phase*: *octylsilyl silica gel for chromatography R* (5 µm).

Mobile phase: 26.5 volumes of *methanol R* and 73.5 volumes of a 10 g/L solution of *disodium hydrogen phosphate R* adjusted to pH 3.5 using *phosphoric acid R* (use within 2 days).

Flow rate: 1.0 mL/min.

Detection: radioactivity detector adjusted for cobalt-58 and spectrophotometer at 361 nm.

Injection: 100 µL.

Run time: 3 times the retention time of cyanocobalamin for the test solution; 30 min for the reference solution.

Limit:

- *[^{58}Co]cyanocobalamin*: minimum 90 per cent of the radioactivity due to cobalt-58.

RADIOACTIVITY

Determine the radioactivity using a calibrated instrument.

STORAGE

Protected from light, at a temperature of 2 °C to 8 °C.

IMPURITIES

A. cobalt-57,

B. cobalt-60.

01/2014:1325

FLUDEOXYGLUCOSE (^{18}F) INJECTION

Fludeoxyglucosi (^{18}F) solutio iniectabilis

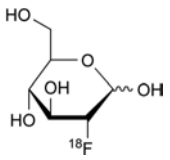

$C_6H_{11}{}^{18}FO_5$ M_r 181.1

DEFINITION

Sterile solution containing 2-[^{18}F]fluoro-2-deoxy-D-glucopyranose (2-[^{18}F]fluoro-2-deoxy-D-glucose) prepared by nucleophilic substitution. It may also contain 2-[^{18}F]fluoro-2-deoxy-D-mannose.

Content:

- *fluorine-18*: 90 per cent to 110 per cent of the declared fluorine-18 radioactivity at the date and time stated on the label.
- *2-fluoro-2-deoxy-D-glucose*: maximum 0.5 mg per maximum recommended dose in millilitres.

CHARACTERS

Appearance: clear, colourless or slightly yellow solution.

Half-life and nature of radiation of fluorine-18: see general chapter *5.7. Table of physical characteristics of radionuclides*.

IDENTIFICATION

A. Gamma-ray spectrometry.

Result: the principal gamma photons have an energy of 0.511 MeV and, depending on the measurement geometry, a sum peak of 1.022 MeV may be observed.

B. Determine the approximate half-life by no fewer than 3 measurements of the activity of a sample in the same geometrical conditions within a suitable period of time (for example, 30 min).

Result: 105 min to 115 min.

C. Examine the chromatograms obtained in test A for radiochemical purity (see Tests).

Result: the principal peak in the radiochromatogram obtained with the test solution is similar in retention time to the principal peak in the chromatogram obtained with reference solution (a).

TESTS

Particular tests for chemical impurities may be omitted if the substances mentioned are not used or cannot be formed in the production process.

pH (*2.2.3*): 4.5 to 8.5.

2-Fluoro-2-deoxy-D-glucose and impurity A. Liquid chromatography (*2.2.29*).

Test solution. The preparation to be examined.

Reference solution (a). Dissolve 1.0 mg of *2-fluoro-2-deoxy-D-glucose R* in *water R* and dilute to 2.0 mL with the same solvent. Dilute 1.0 mL of the solution to *V* with *water R*, *V* being the maximum recommended dose in millilitres.

Reference solution (b). Dissolve 1.0 mg of *2-chloro-2-deoxy-D-glucose R* (impurity A) in *water R* and dilute to 2.0 mL with the same solvent. Dilute 1.0 mL of the solution to *V* with *water R*, *V* being the maximum recommended dose in millilitres.

Reference solution (c). Dissolve 1.0 mg of *2-fluoro-2-deoxy-D-mannose R* in *water R* and dilute to 2.0 mL with the same solvent. Mix 0.5 mL of this solution with 0.5 mL of reference solution (a).

Column:

- *size*: *l* = 0.25 m, Ø = 4.0 mm;
- *stationary phase*: *strongly basic anion-exchange resin for chromatography R* (10 µm).

Mobile phase: 4 g/L solution of *sodium hydroxide R* in *carbon dioxide-free water R*, protected from the atmosphere during chromatography.

Flow rate: 1 mL/min.

Detection: detector suitable for carbohydrates in the required concentration range, such as a pulsed amperometric detector and radioactivity detector connected in series.

Injection: 20 µL.

Run time: twice the retention time of 2-fluoro-2-deoxy-D-glucose.

Relative retention with reference to 2-fluoro-2-deoxy-D-glucose (retention time = about 12 min): 2-fluoro-2-deoxy-D-mannose = about 0.9; impurity A = about 1.1.

System suitability: reference solution (c) using the carbohydrate detector:

- *resolution*: minimum 1.5 between the peaks due to 2-fluoro-2-deoxy-D-mannose and 2-fluoro-2-deoxy-D-glucose;
- *signal-to-noise ratio*: minimum 10 for the peak due to 2-fluoro-2-deoxy-D-glucose.

Limits: in the chromatogram obtained with the carbohydrate detector:

- *2-fluoro-2-deoxy-D-glucose*: not more than the area of the corresponding peak in the chromatogram obtained with reference solution (a) (0.5 mg/*V*);
- *impurity A*: not more than the area of the corresponding peak in the chromatogram obtained with reference solution (b) (0.5 mg/*V*).

Impurity B. Spot test.

Test solution. To 100 µL of the preparation to be examined add 400 µL of *water R* and mix.

Reference solution (a): *water R*.

Reference solution (b). Dissolve 11.0 mg of *aminopolyether R* (impurity B) in *water R* and dilute to 25.0 mL with the same solvent. Dilute 1.0 mL of the solution to *V* with *water R*, *V* being the maximum recommended dose in millilitres.

Plate: *TLC silica gel plate for aminopolyether test R*.

Application: 2.5 µL; in addition, apply 2.5 µL of the test solution and then 2.5 µL of reference solution (b) at the same place.

Detection: visually compare the spots 1 min after application.

System suitability:

- the spot due to the successive application of the test solution and reference solution (b) is similar in appearance to the spot due to reference solution (b), which is characterised by a number of concentric circles; the darker innermost circle (of intensity proportional to the concentration of impurity B) may be surrounded by a bluish-black ring, outside of which is a lighter circle surrounded by a peripheral dark edge;
- the spot due to reference solution (a) has a more diffuse inner circle, which is brownish-pink and without a distinct margin between it and the surrounding lighter zone;
- the spot due to reference solution (b) is clearly different from the spot due to reference solution (a).

Limit:

- the central portion of the spot due to the test solution is not more intense than that of the spot due to reference solution (b) (2.2 mg/*V*).

Impurity C. Liquid chromatography (*2.2.29*).

Test solution. The preparation to be examined.

Reference solution (a). Dissolve 0.170 g of *tetrabutylammonium hydroxide R* in *water R* and dilute to 20.0 mL with the same solvent. Dilute 1.0 mL of the solution to *V* with *water R*, *V* being the maximum recommended dose in millilitres.

Reference solution (b). Dissolve 80.0 mg of *tetrabutylammonium hydroxide R* in *water R* and dilute to 10.0 mL with the same solvent. Dilute 1.0 mL of the solution to 25.0 mL with *water R*.

Column:

- *size*: *l* = 0.10 m, Ø = 4.6 mm;
- *stationary phase*: *octadecylsilyl silica gel for chromatography R* (3 µm).

Mobile phase: 25 volumes of a 0.95 g/L solution of *toluenesulfonic acid R* and 75 volumes of *acetonitrile R*.

Flow rate: 0.6 mL/min.

Detection: spectrophotometer at 254 nm.

Injection: 20 µL.

Run time: twice the retention time of impurity C.

Retention time: impurity C = about 3.3 min.

System suitability: reference solution (b):

- *signal-to-noise ratio*: minimum 10 for the principal peak;
- *symmetry factor*: maximum 1.8 for the principal peak.

Limit:

- *impurity C*: not more than the area of the corresponding peak in the chromatogram obtained with reference solution (a) (2.6 mg/*V*).

Impurity D: maximum 0.02 mg/*V*.

Ultraviolet and visible absorption spectrophotometry (*2.2.25*).

Test solution. The preparation to be examined.

Reference solution. Dissolve 20.0 mg of *4-(4-methylpiperidin-1-yl)pyridine R* (impurity D) in *water R* and dilute to 100.0 mL with the same solvent. Dilute 0.1 mL of the solution to *V* with *water R*, *V* being the maximum recommended dose in millilitres.

Measure the absorbance of the test solution and the reference solution at the absorption maximum of 263 nm.

Result: the absorbance of the test solution is not greater than that of the reference solution.

Residual solvents: limited according to the principles defined in general chapter *5.4*. The preparation may be released for use before completion of the test.

Sterility. It complies with the test for sterility prescribed in the monograph *Radiopharmaceutical preparations (0125)*. The preparation may be released for use before completion of the test.

Bacterial endotoxins (*2.6.14*): less than 175/*V* IU/mL, *V* being the maximum recommended dose in millilitres. The preparation may be released for use before completion of the test.

RADIONUCLIDIC PURITY

The preparation may be released for use before completion of test B.

Fluorine-18: minimum 99.9 per cent of the total radioactivity.

A. Gamma-ray spectrometry.

Limit: peaks in the gamma spectrum corresponding to photons with an energy different from 0.511 MeV or 1.022 MeV represent not more than 0.1 per cent of the total radioactivity.

B. Gamma-ray spectrometry.

Determine the amount of fluorine-18 and radionuclidic impurities with a half-life longer than 2 h. For the detection and quantification of impurities, retain the preparation to be examined for at least 24 h to allow the fluorine-18 to decay to a level that permits the detection of impurities.

Results: the total radioactivity due to radionuclidic impurities is not more than 0.1 per cent.

RADIOCHEMICAL PURITY

A. Liquid chromatography (*2.2.29*) as described in the test for 2-fluoro-2-deoxy-D-glucose and impurity A. If necessary, dilute the test solution with *water R* to obtain a radioactivity concentration suitable for the radioactivity detector.

Injection: test solution and reference solutions (a) and (c).

Relative retention with reference to 2-[^{18}F]fluoro-2-deoxy-D-glucose (retention time = about 12 min): 2-[^{18}F]fluoro-2-deoxy-D-mannose = about 0.9. Partially or fully acetylated derivatives of both compounds hydrolyse under the chromatographic conditions and therefore elute as 2-[^{18}F]fluoro-2-deoxy-D-glucose and 2-[^{18}F]fluoro-2-deoxy-D-mannose.

Locate the peaks due to 2-[^{18}F]fluoro-2-deoxy-D-glucose and 2-[^{18}F]fluoro-2-deoxy-D-mannose using the chromatograms obtained with the carbohydrate detector and reference solutions (a) and (c).

Limits:

- *[^{18}F]fluorine in the form of 2-[^{18}F]fluoro-2-deoxy-D-glucose and 2-[^{18}F]fluoro-2-deoxy-D-mannose*: minimum 95 per cent of the total radioactivity due to fluorine-18;
- *2-[^{18}F]fluoro-2-deoxy-D-mannose*: maximum 10 per cent of the total radioactivity due to 2-[^{18}F]fluoro-2-deoxy-D-glucose and 2-[^{18}F]fluoro-2-deoxy-D-mannose.

B. Thin-layer chromatography (*2.2.27*).

Test solution. The preparation to be examined.

Reference solution. Dissolve, with gentle heating, 30 mg of *1,2,3,4-tetra-O-acetyl-β-D-glucopyranose R* and 20 mg of *glucose R* in 1 mL of *water R*.

Radiopharmaceutical preparations

Plate: *TLC silica gel plate R.*

Mobile phase: *water R*, *acetonitrile R* (5:95 *V/V*).

Application: about 5 µL.

Development: over a path of 8 cm.

Drying: in air for 15 min.

Detection: suitable detector to determine the distribution of radioactivity; immerse the plate in a 75 g/L solution of *sulfuric acid R* in *methanol R* and dry with a heat gun or at 150 °C until the appearance of dark spots in the chromatogram obtained with the reference solution.

Retardation factors: [^{18}F]fluoride = about 0; 2-[^{18}F]fluoro-2-deoxy-D-glucose and 2-[^{18}F]fluoro-2-deoxy-D-mannose = about 0.45; partially or fully acetylated derivatives of 2-[^{18}F]fluoro-2-deoxy-D-glucose and 2-[^{18}F]fluoro-2-deoxy-D-mannose = about 0.8 to 0.95.

System suitability: reference solution:

– the chromatogram shows 2 clearly separated spots.

Limits:

– *[^{18}F]fluorine in the form of 2-[^{18}F]fluoro-2-deoxy-D-glucose and 2-[^{18}F]fluoro-2-deoxy-D-mannose*: minimum 95 per cent of the total radioactivity due to fluorine-18;

– *[^{18}F]fluorine in the form of fluoride and partially or fully acetylated derivatives of 2-[^{18}F]fluoro-2-deoxy-D-glucose and 2-[^{18}F]fluoro-2-deoxy-D-mannose*: maximum 5 per cent of the total radioactivity due to fluorine-18.

RADIOACTIVITY

Determine the radioactivity using a calibrated instrument.

IMPURITIES

Specified impurities: A, B, C, D, E.

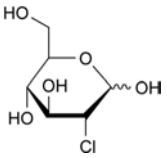

A. 2-chloro-2-deoxy-D-glucopyranose (2-chloro-2-deoxy-D-glucose),

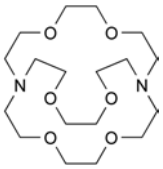

B. 4,7,13,16,21,24-hexaoxa-1,10-diazabicyclo[8.8.8]-hexacosane (aminopolyether),

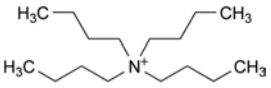

C. *N*,*N*,*N*-tributylbutan-1-aminium (tetrabutylammonium),

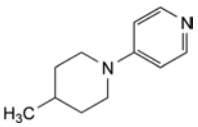

D. 4-(4-methylpiperidin-1-yl)pyridine,

E. [^{18}F]fluoride.

01/2008:1917

FLUMAZENIL (*N*-[^{11}C]METHYL) INJECTION

Flumazenili (*N*-[^{11}C]methyl) solutio iniectabilis

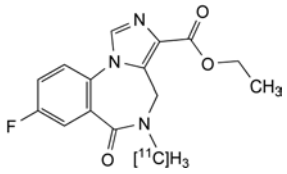

DEFINITION

Sterile solution of ethyl 8-fluoro-5-[^{11}C]methyl-6-oxo-5,6-dihydro-4*H*-imidazo[1,5-*a*][1,4]benzodiazepine-3-carboxylate which may contain a stabiliser such as ascorbic acid.

Content: 90 per cent to 110 per cent of the declared carbon-11 radioactivity at the date and time stated on the label.

Content of flumazenil: maximum 50 µg in the maximum recommended dose in millilitres.

PRODUCTION

RADIONUCLIDE PRODUCTION

Carbon-11 is a radioactive isotope of carbon which is most commonly produced by proton irradiation of nitrogen. Depending on the addition of either trace amounts of oxygen or small amounts of hydrogen, the radioactivity is obtained as [^{11}C]carbon dioxide or [^{11}C]methane, respectively.

RADIOCHEMICAL SYNTHESIS

[5-Methyl-^{11}C]flumazenil may be prepared by *N*-alkylation of ethyl 8-fluoro-6-oxo-5,6-dihydro-4*H*-imidazo[1,5-*a*][1,4]benzodiazepine-3-carboxylate (demethylflumazenil) with iodo[^{11}C]methane or [^{11}C]methyl trifluoromethanesulfonate.

Synthesis of iodo[^{11}C]methane

Iodo[^{11}C]methane may be produced from [^{11}C]carbon dioxide or from [^{11}C]methane. The most frequently used method is reduction of [^{11}C]carbon dioxide with lithium aluminium hydride. The [^{11}C]methanolate formed is reacted with hydriodic acid. Alternatively [^{11}C]methane, either obtained directly in the target or by on-line processes from [^{11}C]carbon dioxide, is reacted with iodine.

Synthesis of [^{11}C]methyl trifluoromethanesulfonate

[^{11}C]methyl trifluoromethanesulfonate may be prepared from iodo[^{11}C]methane using a solid support such as graphitised carbon, impregnated with silver trifluoromethanesulfonate.

Synthesis of [5-methyl-^{11}C]flumazenil

The most widely used method to obtain [5-methyl-^{11}C]-flumazenil is the *N*-alkylation of demethylflumazenil with iodo[^{11}C]methane in alkaline conditions in a solvent such as dimethylformamide or acetone. The resulting [5-methyl-^{11}C]flumazenil can be purified by semi-preparative liquid chromatography. For example, a column packed with octadecylsilyl silica gel for chromatography eluted with a mixture of ethanol and water is suitable.

PRECURSOR FOR SYNTHESIS

Demethylflumazenil

Melting point (*2.2.14*): 286 °C to 289 °C.

Infrared absorption spectrophotometry (*2.2.24*).

Comparison: *Ph. Eur. reference spectrum of demethylflumazenil.*

CHARACTERS

Appearance: clear, colourless solution.

Radiopharmaceutical preparations

Half-life and nature of radiation of carbon-11: see general chapter *5.7. Table of physical characteristics of radionuclides*.

IDENTIFICATION

A. Gamma-ray spectrometry.

Results: the only gamma photons have an energy of 0.511 MeV and, depending on the measurement geometry, a sum peak of 1.022 MeV may be observed.

B. It complies with test B for radionuclidic purity (see Tests).

C. Examine the chromatograms obtained in the test for radiochemical purity.

Results: the principal peak in the radiochromatogram obtained with the test solution is similar in retention time to the principal peak in the chromatogram obtained with reference solution (a).

TESTS

pH (*2.2.3*): 6.0 to 8.0.

Sterility. It complies with the test for sterility prescribed in the monograph on *Radiopharmaceutical preparations (0125)*. The injection may be released for use before completion of the test.

Bacterial endotoxins (*2.6.14*): less than 175/*V* IU/mL, *V* being the maximum recommended dose in millilitres. The injection may be released for use before completion of the test.

Flumazenil and impurity A. Liquid chromatography (*2.2.29*).

Test solution. The preparation to be examined.

Reference solution (a). Dissolve 2.5 mg of *flumazenil R* in 5 mL of *methanol R*.

Reference solution (b). Dissolve 2.5 mg of *demethylflumazenil R* in 50 mL of *methanol R*.

Reference solution (c). To 0.1 mL of reference solution (a) add 0.1 mL of reference solution (b) and dilute to *V* with a 0.9 g/L solution of *sodium chloride R*, *V* being the maximum recommended dose in millilitres.

Reference solution (d). Dilute 0.1 mL of reference solution (a) to 50 mL with *methanol R*. Dilute 1.0 mL of this solution to *V* with a 0.9 g/L solution of *sodium chloride R*, *V* being the maximum recommended dose in millilitres.

Column:

- *size*: *l* = 0.15 m, Ø = 3.9 mm,
- *stationary phase*: spherical *octadecylsilyl silica gel for chromatography R* (5 µm) with a specific surface area of 440 m^2/g, a pore size of 100 nm and a carbon loading of 19 per cent,
- *temperature*: maintain at a constant temperature between 20-30 °C.

Mobile phase: *methanol R*, *water R* (45:55 *V/V*).

Flow rate: 1 mL/min.

Detection: spectrophotometer at 260 nm and radioactivity detector connected in series.

Injection: 100 µL.

Run time: 10 min.

Relative retention with reference to flumazenil: impurity A = about 0.74.

System suitability: reference solution (c):

- *resolution*: minimum 2.5 between the peaks due to flumazenil and impurity A.

Limits: examine the chromatogram obtained with the spectrophotometer:

- *flumazenil*: not more than the area of the corresponding peak in the chromatogram obtained with reference solution (c) (50 µg/*V*),
- *impurity A*: not more than the area of the corresponding peak in the chromatogram obtained with reference solution (c) (5 µg/*V*),
- *any other impurity*: not more than the area of the principal peak in the chromatogram obtained with reference solution (d) (1 µg/*V*).

Residual solvents are limited according to the principles defined in the general chapter (*5.4*), using the general method (*2.4.24*). The preparation may be released for use before completion of the test.

RADIONUCLIDIC PURITY

Carbon-11: minimum 99 per cent of the total radioactivity.

The preparation may be released for use before completion of the test.

A. Gamma-ray spectrometry.

Results: the spectrum obtained with the solution to be examined does not differ significantly from that obtained with a standardised fluorine-18 solution.

B. Half-life: 19.9 min to 20.9 min.

RADIOCHEMICAL PURITY

Liquid chromatography (*2.2.29*) as described in the test for flumazenil and impurity A, with the following modifications.

Injection: test solution and reference solution (a); if necessary, dilute the test solution to a radioactivity concentration suitable for the detector.

Limit: examine the chromatogram obtained with the radioactivity detector:

- *[5-methyl-^{11}C]flumazenil*: minimum 95 per cent of the total radioactivity.

RADIOACTIVITY

Determine the radioactivity using a calibrated instrument.

LABELLING

The label states the maximum recommended dose in millilitres.

IMPURITIES

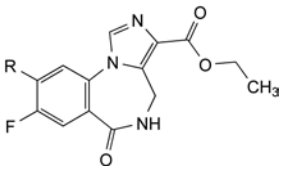

A. R = H: ethyl 8-fluoro-6-oxo-5,6-dihydro-4*H*-imidazo[1,5-*a*][1,4]benzodiazepine-3-carboxylate (demethylflumazenil),

B. R = CH_2-CO-CH_3: ethyl 8-fluoro-6-oxo-9-(2-oxopropyl)-5,6-dihydro-4*H*-imidazo[1,5-*a*][1,4]benzodiazepine-3-carboxylate (acetone addition compound of demethylflumazenil).

01/2011:2390

FLUORIDE (^{18}F) SOLUTION FOR RADIOLABELLING

Fluoridi (^{18}F) solutio ad radio-signandum

DEFINITION

Alkaline solution containing fluorine-18 in the form of [^{18}F]fluoride.

Content: 90 per cent to 110 per cent of the declared fluorine-18 radioactivity at the date and time stated on the label.

CHARACTERS

Appearance: clear, colourless solution.

Half-life and nature of radiation of fluorine-18: see general chapter *5.7. Table of physical characteristics of radionuclides*.

Radiopharmaceutical preparations

IDENTIFICATION

A. Gamma-ray spectrometry.

Result: the principal photons have an energy of 0.511 MeV and, depending on the measurement geometry, a sum peak of 1.022 MeV may be observed.

B. Determine the approximate half-life by no fewer than 3 measurements of the activity of a sample in the same geometrical conditions within a suitable period of time (for example, 30 min).

Result: 105 min to 115 min.

C. Examine the chromatograms obtained in the test for radiochemical purity (see Tests).

Results: the principal peak in the radiochromatogram obtained with the test solution is similar in retention time to the principal peak in the chromatogram obtained with the reference solution; in the chromatogram obtained with the reference solution, the signal due to fluoride is negative.

TESTS

pH: 8.0 to 14.0, using a *pH indicator strip R*.

Bacterial endotoxins (*2.6.14*): less than 20 IU/mL, if intended for use in the manufacture of parenteral preparations without a further appropriate procedure for the removal of bacterial endotoxins. The preparation may be released for use before completion of the test.

RADIONUCLIDIC PURITY

The preparation may be released for use before completion of test B.

Fluorine-18: minimum 99.9 per cent of the total radioactivity.

A. Gamma-ray spectrometry. Preliminary test.

Limit: peaks in the gamma spectrum corresponding to photons with an energy different from 0.511 MeV or 1.022 MeV represent not more than 0.1 per cent of the total radioactivity.

B. Gamma-ray spectrometry.

Determine the amount of fluorine-18 and radionuclidic impurities with a half-life longer than 2 h. For the detection and quantification of impurities, retain the preparation to be examined for at least 24 h to allow the fluorine-18 to decay to a level that permits the detection of impurities.

Result: the total radioactivity due to radionuclidic impurities is not more than 0.1 per cent.

RADIOCHEMICAL PURITY

[^{18}F]fluoride. Liquid chromatography (*2.2.29*).

Test solution. Dilute the preparation to be examined with *water R* to obtain a radioactivity concentration suitable for the radioactivity detector.

Reference solution. Dissolve 10 mg of *potassium fluoride R* in *water R* and dilute to 10 mL with the same solvent.

Column:

- *size*: *l* = 0.25 m, Ø = 4.0 mm;
- *stationary phase*: *strongly basic anion-exchange resin for chromatography R* (10 µm).

Mobile phase: 4 g/L solution of *sodium hydroxide R* in *carbon dioxide-free water R*, protected from atmospheric carbon dioxide.

Flow rate: 1 mL/min.

Detection: spectrophotometer at 220 nm and a radioactivity detector connected in series.

Injection: 20 µL.

Run time: 12 min.

System suitability: reference solution:

- *signal-to-noise ratio*: minimum 10 for the principal peak;
- *retention time of fluoride*: minimum 3 times the hold-up time.

Examine the chromatogram obtained with the test solution using the radioactivity detector and locate the peak due to fluoride by comparison with the chromatogram obtained with the reference solution using the spectrophotometer.

Limit:

- *[^{18}F]fluoride*: minimum 98.5 per cent of the total radioactivity due to fluorine-18.

RADIOACTIVITY

Determine the radioactivity using a calibrated instrument.

LABELLING

The label states:

- that the solution is not for direct administration to humans;
- where applicable, that the substance is suitable for use in the manufacture of parenteral preparations.

01/2008:1918

FLUORODOPA (^{18}F) (PREPARED BY ELECTROPHILIC SUBSTITUTION) INJECTION

Fluorodopae (^{18}F) ab electrophila substitutione solutio iniectabilis

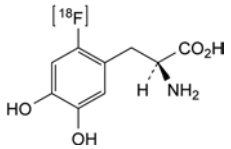

DEFINITION

Sterile solution of (2*S*)-2-amino-3-(2-([^{18}F]fluoro)-4,5-dihydroxyphenyl)propanoic acid (6-[^{18}F]fluorolevodopa). It may contain stabilisers such as ascorbic acid and edetic acid.

This monograph applies to an injection containing 6-[^{18}F]fluorolevodopa produced by electrophilic substitution.

Content:

- *fluorine-18*: 90 per cent to 110 per cent of the declared fluorine-18 radioactivity at the date and time stated on the label;
- *dopa*: maximum 1 mg per maximum recommended dose in millilitres;
- *6-fluorolevodopa*: maximum 15 mg per maximum recommended dose in millilitres.

PRODUCTION

RADIONUCLIDE PRODUCTION

Fluorine-18 is a radioactive isotope of fluorine that may be produced by various nuclear reactions induced by proton irradiation of oxygen-18, deuteron irradiation of neon-20, or helium-3 or helium-4 irradiation of oxygen-16.

In order to obtain fluorine-18 in a chemical form suitable for electrophilic substitution reactions, such as fluorine gas or gaseous acetylhypofluorite, a small amount of non-radioactive fluorine gas (0.3-0.8 per cent of the target gas volume) must be added as a carrier at some step in the production process.

RADIOCHEMICAL SYNTHESIS

6-[^{18}F]Fluorolevodopa may be prepared by various radiochemical synthetic pathways, which lead to different products in terms of yield, specific radioactivity, by-products and possible impurities. Electrophilic pathways for production of 6-[^{18}F]fluorolevodopa may proceed by fluorodemetallation of a stannylated derivative of levodopa, with molecular [^{18}F]fluorine or [^{18}F]acetylhypofluorite, followed by hydrolysis of protecting groups and final purification by semipreparative liquid chromatography. Pathways using demercuration or dethallation must not be used.

CHARACTERS

Appearance: clear, colourless solution.

Half-life and nature of radiation of fluorine-18: see general chapter *5.7. Table of physical characteristics of radionuclides*.

IDENTIFICATION

A. Test A for radionuclidic purity (see Tests).

B. Determine the approximate half-life by at least 3 measurements of the activity of a sample in the same geometrical conditions over a suitable period of time, for example 30 min.

Results: 105 min to 115 min.

C. Examine the chromatograms obtained in the test for radiochemical purity (see Tests).

Results: the principal peak in the radiochromatogram obtained with the test solution is similar in retention time to the peak due to 6-fluorolevodopa in the chromatogram obtained with reference solution (a).

D. Examine the chromatograms obtained in the test for impurities C and D (see Tests).

Results: the principal peak in the radiochromatogram obtained with the test solution is similar in retardation factor to the peak due to 6-fluorolevodopa in the chromatogram obtained with reference solution (b).

TESTS

pH (*2.2.3*): 4.0 to 5.5.

Sterility. It complies with the test for sterility prescribed in the monograph *Radiopharmaceutical preparations (0125)*. The injection may be released for use before completion of the test.

Bacterial endotoxins (*2.6.14*): less than 175/*V* IU/mL, *V* being the maximum recommended dose in millilitres. The injection may be released for use before completion of the test.

6-Fluorolevodopa, dopa, impurity A and impurity B. Liquid chromatography (*2.2.29*). *Prepare the reference solutions immediately before use.*

Test solution. The preparation to be examined.

Reference solution (a). Dissolve 18.0 mg of *6-fluorolevodopa hydrochloride R* in 5.0 mL of the mobile phase and dilute to *V* with the mobile phase, *V* being the maximum recommended dose in millilitres.

Reference solution (b). Dissolve 1.0 mg of *levodopa R* in 5 mL of the mobile phase and dilute to *V* with the mobile phase, *V* being the maximum recommended dose in millilitres.

Reference solution (c). Dissolve 1.0 mg of *trimethyltin chloride R* (impurity A) in 2.0 mL of the mobile phase. Dilute 1.0 mL of this solution to *V* with the mobile phase, *V* being the maximum recommended dose in millilitres.

Reference solution (d). Mix equal volumes of reference solutions (b) and (c).

Reference solution (e). Dissolve 2.0 mg of *6-hydroxydopa R* (impurity B) in 20.0 mL of the mobile phase. Dilute 0.25 mL of this solution to *V* with the mobile phase, *V* being the maximum recommended dose in millilitres.

Column:

- *size*: *l* = 0.25 m, Ø = 4.0 mm;
- *stationary phase*: spherical *end-capped octadecylsilyl silica gel for chromatography R*;
- *temperature*: maintain at a constant temperature between 20 °C and 30 °C.

Mobile phase: 6.9 g/L solution of *sodium dihydrogen phosphate R* adjusted to pH 2.4 with a 4.8 g/L solution of *phosphoric acid R*.

Flow rate: 1 mL/min.

Detection: spectrophotometer at 200 nm and radioactivity detector connected in series.

Injection: 20 µL.

Run time: 15 min.

Relative retention with reference to 6-fluorolevodopa (retention time = about 6 min): impurity A and impurity B = about 0.7; dopa = about 0.8.

System suitability: reference solution (d):

- *resolution*: minimum 1.5 between the peaks due to dopa and impurity A.

Limits: examine the chromatograms obtained with the spectrophotometer:

- *6-fluorolevodopa*: not more than the area of the corresponding peak in the chromatogram obtained with reference solution (a) (15 mg/*V*);
- *dopa*: not more than the area of the peak due to levodopa in the chromatogram obtained with reference solution (b) (1.0 mg/*V*);
- *sum of impurities A and B*: not more than the area of the principal peak in the chromatogram obtained with reference solution (e) (corresponding to a limit of 0.5 mg/*V* of impurity A or a limit of 0.025 mg/*V* of impurity B, or to lower limits of each if both impurities are present).

Residual solvents: limited according to the principles defined in general chapter *5.4*. The preparation may be released for use before completion of the test.

RADIONUCLIDIC PURITY

Fluorine-18: minimum 99.9 per cent of the total radioactivity. The preparation may be released for use before completion of test B.

A. Gamma-ray spectrometry

Results: the only gamma photons have an energy of 0.511 MeV and, depending on the measurement geometry, a sum peak of 1.022 MeV may be observed.

B. Gamma-ray spectrometry

Determine the amount of fluorine-18 and radionuclidic impurities with a half-life longer than 2 h. For the detection and quantification of impurities, retain the preparation to be examined for a sufficient time to allow the fluorine-18 to decay to a level that permits the detection of impurities.

Results: the spectrum obtained with the preparation to be examined does not differ significantly from a background spectrum.

RADIOCHEMICAL PURITY

Liquid chromatography (*2.2.29*) as described in the test for 6-fluorolevodopa, dopa, impurity A and impurity B.

Examine the chromatogram recorded using the radioactivity detector and locate the peak due to 6-[^{18}F]fluorolevodopa by comparison with the chromatogram obtained with reference solution (a) and the spectrophotometer.

Limit:

- *6-[^{18}F]fluorolevodopa*: minimum 95 per cent of the total radioactivity due to fluorine-18.

Impurities C and D. Thin-layer chromatography (*2.2.27*).

Test solution. The preparation to be examined.

Reference solution (a). Dissolve 2 mg of *DL-6-fluorodopa hydrochloride R* in *water R* and dilute to 10 mL with the same solvent.

Reference solution (b). Dissolve 2 mg of *6-fluorolevodopa hydrochloride R* in *water R* and dilute to 10 mL with the same solvent.

Plate: *TLC octadecylsilyl silica gel plate for chiral separations R*.

Mobile phase: *methanol R*, *water R* (50:50 *V*/*V*).

Application: 2 µL.

Development: over a path of 10 cm.

Drying: in air for 5 min.

Detection: spray with a 2 g/L solution of *ninhydrin R* in *anhydrous ethanol R* and heat at 60 °C for 10 min; determine the distribution of radioactivity using a suitable detector.

Retardation factors: impurity D = about 0; 6-[^{18}F]fluorolevodopa = about 0.3; impurity C = about 0.5.

System suitability: reference solution (a):

– the chromatogram shows 2 clearly separated spots.

Limits:

– *impurity C*: maximum 2 per cent of the total radioactivity due to fluorine-18;
– *impurity D*: maximum 4 per cent of the total radioactivity due to fluorine-18.

RADIOACTIVITY

Measure the radioactivity using a calibrated instrument.

LABELLING

The label states the maximum recommended dose in millilitres.

IMPURITIES

A. Cl-Sn(CH_3)$_3$: chlorotrimethylstannane (trimethyltin chloride),

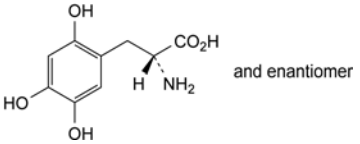

B. (2*RS*)-2-amino-3-(2,4,5-trihydroxyphenyl)propanoic acid (6-hydroxydopa),

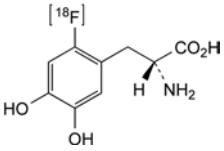

C. (2*R*)-2-amino-3-(2-[^{18}F]fluoro-4,5-dihydroxyphenyl)-propanoic acid (6-[^{18}F]fluorodextrodopa),

D. [^{18}F]fluoride.

01/2014:2459

FLUOROMISONIDAZOLE (^{18}F) INJECTION

Fluoromisonidazoli (^{18}F) solutio iniectabilis

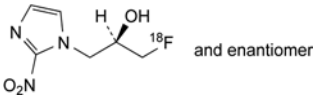

$C_6H_8{}^{18}FN_3O_3$ M_r 188.1

DEFINITION

Sterile solution containing (2*RS*)-1-[^{18}F]fluoro-3-(2-nitro-1*H*-imidazol-1-yl)propan-2-ol ([^{18}F]FMISO). It may contain a suitable buffer.

Content:

– *fluorine-18*: 90 per cent to 110 per cent of the declared fluorine-18 radioactivity at the date and time stated on the label;
– *fluoromisonidazole*: maximum 0.1 mg per maximum recommended dose in millilitres.

CHARACTERS

Appearance: clear, colourless or slightly yellow solution.

Half-life and nature of radiation of fluorine-18: see general chapter *5.7. Table of physical characteristics of radionuclides*.

IDENTIFICATION

A. Gamma-ray spectrometry.

Result: the principal gamma photons have an energy of 0.511 MeV and, depending on the measurement geometry, a sum peak of 1.022 MeV may be observed.

B. Determine the approximate half-life by no fewer than 3 measurements of the activity of a sample in the same geometrical conditions within a suitable period of time (for example, 30 min).

Result: 105 min to 115 min.

C. Examine the chromatograms obtained in the test for [^{18}F]fluoromisonidazole under radiochemical purity (see Tests).

Result: the principal peak in the radiochromatogram obtained with the test solution is similar in retention time to the principal peak in the chromatogram obtained with reference solution (a).

TESTS

pH: 4.5 to 8.5, using a *pH indicator strip R*.

Impurity A. Spot test.

Test solution. To 100 µL of the preparation to be examined add 400 µL of *water R* and mix.

Reference solution (a): *water R*.

Reference solution (b). Dissolve 11.0 mg of *aminopolyether R* (impurity A) in *water R* and dilute to 25.0 mL with the same solvent. Dilute 1.0 mL of the solution to *V* with *water R*, *V* being the maximum recommended dose in millilitres.

Plate: *TLC silica gel plate for aminopolyether test R*.

Application: 2.5 µL; as an additional spot, apply 2.5 µL of the test solution and then 2.5 µL of reference solution (b) at the same place.

Detection: visually compare the spots 1 min after application.

System suitability:

– the spot due to the application of both the test solution and reference solution (b) is similar in appearance to the spot due to reference solution (b), which is characterised by a number of concentric circles; the darker innermost circle (of intensity proportional to the concentration of impurity A) may be surrounded by a bluish-black ring, outside of which is a lighter circle surrounded by a peripheral dark edge;
– the spot due to reference solution (a) has a more diffuse inner circle, which is brownish-pink and without a distinct margin between it and the surrounding lighter zone;
– the spot due to reference solution (b) is clearly different from the spot due to reference solution (a).

Limit:

– the central portion of the spot due to the test solution is not more intense than that of the spot due to reference solution (b) (2.2 mg/*V*).

Impurity B. Liquid chromatography (*2.2.29*).

Test solution. The preparation to be examined.

Reference solution (a). Dissolve 0.170 g of *tetrabutylammonium hydroxide R* in *water R* and dilute to 20.0 mL with the same solvent. Dilute 1.0 mL of the solution to *V* with *water R*, *V* being the maximum recommended dose in millilitres.

Reference solution (b). Dissolve 80.0 mg of *tetrabutylammonium hydroxide R* in *water R* and dilute to 10.0 mL with the same solvent. Dilute 1.0 mL of the solution to 25.0 mL with *water R*.

Column:

– *size*: *l* = 0.1 m, Ø = 4.6 mm;
– *stationary phase*: *octadecylsilyl silica gel for chromatography R* (3 µm).

Mobile phase: 0.95 g/L solution of *toluenesulfonic acid R*, *acetonitrile R* (25:75 *V*/*V*).

Flow rate: 0.6 mL/min.

Detection: spectrophotometer at 254 nm.

Radiopharmaceutical preparations

Injection: 20 µL.

Run time: twice the retention time of impurity B.

Retention time: impurity B = about 3.3 min.

System suitability: reference solution (b):

- *signal-to-noise ratio*: minimum 10 for the principal peak;
- *symmetry factor*: maximum 1.8 for the principal peak.

Limit:

- *impurity B*: not more than the area of the corresponding peak in the chromatogram obtained with reference solution (a) (2.6 mg/*V*).

Fluoromisonidazole and related substances. Liquid chromatography (*2.2.29*).

Test solution. The preparation to be examined.

Reference solution (a). Dissolve 5.0 mg of *fluoromisonidazole R* in *water R* and dilute to 50.0 mL with the same solvent. Dilute 1.0 mL of the solution to *V* with *water R*, *V* being the maximum recommended dose in millilitres.

Reference solution (b). Dissolve 5.0 mg of *desmethylmisonidazole R* (impurity C) in *water R* and dilute to 50.0 mL with the same solvent. Dilute 1.0 mL of the solution to *V* with *water R*, *V* being the maximum recommended dose in millilitres.

Reference solution (c). Mix 1 mL of reference solution (a) and 1 mL of reference solution (b).

Blank solution. Prepare a solution containing each excipient at the concentration used in the preparation.

Column:

- *size*: *l* = 0.25 m, Ø = 4.6 mm;
- *stationary phase*: *end-capped polar-embedded octadecylsilyl amorphous organosilica polymer R* (5 µm).

Mobile phase:

- *mobile phase A*: *carbon dioxide-free water R*, protected from the atmosphere during chromatography;
- *mobile phase B*: *acetonitrile R*;

Time (min)	Mobile phase A (per cent *V/V*)	Mobile phase B (per cent *V/V*)
0 - 10	90	10
10 - 20	90 → 5	10 → 95
20 - 30	5	95

Flow rate: 1 mL/min.

Detection: spectrophotometer at 320 nm and radioactivity detector connected in series.

Injection: 20 µL.

Relative retention with reference to fluoromisonidazole (retention time = about 6 min): impurity C = about 0.6.

System suitability: reference solution (c) using the spectrophotometer:

- *resolution*: minimum 5.0 between the peaks due to impurity C and fluoromisonidazole.

Limits: in the chromatogram obtained with the spectrophotometer:

- *fluoromisonidazole*: not more than the area of the corresponding peak in the chromatogram obtained with reference solution (a) (0.1 mg/*V*);
- *impurity C*: not more than the area of the corresponding peak in the chromatogram obtained with reference solution (b) (0.1 mg/*V*);
- *any other impurity*: for each impurity, not more than the area of the principal peak in the chromatogram obtained with reference solution (a) (0.1 mg/*V*);
- *total*: not more than 5 times the area of the principal peak in the chromatogram obtained with reference solution (a) (0.5 mg/*V*);
- *disregard limit*: 0.3 times the area of the principal peak in the chromatogram obtained with reference solution (a) (0.03 mg/*V*).

Ethanol (*2.4.24* or another suitable, validated method): maximum 10 per cent *V/V* and maximum 2.5 g per administration, taking the density (*2.2.5*) to be 0.790 g/mL.

Residual solvents: limited according to the principles defined in general chapter *5.4*. The preparation may be released for use before completion of the test.

Sterility. It complies with the test for sterility prescribed in the monograph *Radiopharmaceutical preparations (0125)*. The preparation may be released for use before completion of the test.

Bacterial endotoxins (*2.6.14*): less than 175/*V* IU/mL, *V* being the maximum recommended dose in millilitres. The preparation may be released for use before completion of the test.

RADIONUCLIDIC PURITY

The preparation may be released for use before completion of test B.

Fluorine-18: minimum 99.9 per cent of the total radioactivity.

A. Gamma-ray spectrometry.

Limit: peaks in the gamma spectrum corresponding to photons with an energy different from 0.511 MeV or 1.022 MeV represent not more than 0.1 per cent of the total radioactivity.

B. Gamma-ray spectrometry.

Determine the amount of fluorine-18 and radionuclidic impurities with a half-life longer than 2 h. For the detection and quantification of impurities, retain the preparation to be examined for at least 24 h to allow the fluorine-18 to decay to a level that permits the detection of impurities.

Result: the total radioactivity due to radionuclidic impurities is not more than 0.1 per cent.

RADIOCHEMICAL PURITY

[^{18}F]Fluoromisonidazole. Liquid chromatography (*2.2.29*) as described in the test for fluoromisonidazole and related substances. If necessary, dilute the test solution with *water R* to obtain a radioactivity concentration suitable for the radioactivity detector.

Examine the chromatogram recorded using the radioactivity detector and locate the peak due to [^{18}F]fluoromisonidazole by comparison with the chromatogram obtained with reference solution (a) using the spectrophotometer.

Limit:

- *[^{18}F]fluoromisonidazole*: minimum 95 per cent of the total radioactivity due to fluorine-18.

Impurity D. Thin-layer chromatography (*2.2.27*).

Test solution. The preparation to be examined.

Plate: *TLC silica gel plate R*.

Mobile phase: *water R*, *acetonitrile R* (5:95 *V/V*).

Application: about 5 µL.

Development: over 2/3 of the plate.

Drying: in a current of warm air.

Detection: suitable detector to determine the distribution of radioactivity.

Retardation factors: impurity D = about 0; [^{18}F]fluoromisonidazole = about 0.8.

Limit:

- *impurity D*: maximum 5 per cent of the total radioactivity due to fluorine-18.

RADIOACTIVITY

Determine the radioactivity using a calibrated instrument.

Radiopharmaceutical preparations

LABELLING

The label states the percentage content of ethanol in the preparation.

IMPURITIES

Specified impurities: A, B, C, D.

Other detectable impurities (the following substances would, if present at a sufficient level, be detected by one or other of the tests in the monograph. They are limited by the general acceptance criterion for other/unspecified impurities. It is therefore not necessary to identify these impurities for demonstration of compliance): *E.*

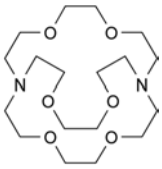

A. 4,7,13,16,21,24-hexaoxa-1,10-diazabicyclo[8.8.8]-hexacosane (aminopolyether),

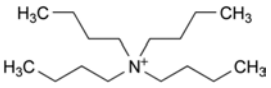

B. *N,N,N*-tributylbutan-1-aminium (tetrabutylammonium),

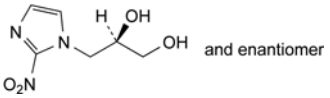

C. (2*RS*)-3-(2-nitro-1*H*-imidazol-1-yl)propane-1,2-diol (desmethylmisonidazole),

D. [^{18}F]fluoride,

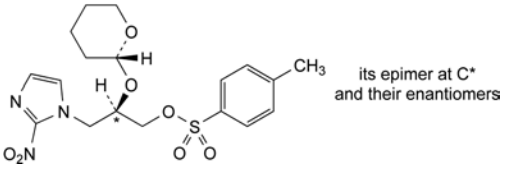

E. mixture of the 4 stereoisomers of 3-(2-nitro-1*H*-imidazol-1-yl)-2-(tetrahydro-2*H*-pyran-2-yloxy)propyl 4-methylbenzenesulfonate.

01/2008:0555
corrected 7.0

GALLIUM (^{67}Ga) CITRATE INJECTION

Gallii (^{67}Ga) citratis solutio iniectabilis

DEFINITION

Sterile solution of gallium-67 in the form of gallium citrate. It may be made isotonic by the addition of sodium chloride and sodium citrate and may contain a suitable antimicrobial preservative such as benzyl alcohol.

Gallium-67: 90 per cent to 110 per cent of the declared gallium-67 radioactivity at the date and time stated on the label.

CHARACTERS

Appearance: clear, colourless solution.

Half-life and nature of radiation of gallium-67: see general chapter *5.7. Table of physical characteristics of radionuclides.*

IDENTIFICATION

A. Gamma-ray spectrometry.

Results: the most prominent gamma photons have energies of 0.093 MeV, 0.185 MeV and 0.300 MeV.

B. To 0.2 mL of the preparation to be examined add 0.2 mL of a solution containing 1 g/L of *ferric chloride R* and 0.1 per cent *V/V* of *hydrochloric acid R* and mix.

Compare the colour with that of a solution containing 7 g/L of *sodium chloride R* and 9 g/L of *benzyl alcohol R* treated in the same manner. A yellow colour develops in the test solution only.

TESTS

pH (*2.2.3*): 5.0 to 8.0.

Zinc: maximum 5 ppm.

Test solution. To 0.1 mL of the preparation to be examined add 0.9 mL of *water R*, 1 mL of a 250 g/L solution of *sodium thiosulfate R*, 5 mL of *acetate buffer solution pH 4.7 R* and 5.0 mL of a dithizone solution prepared as follows: dissolve 10 mg of *dithizone R* in 100 mL of *methyl ethyl ketone R* allow to stand for 5 min, filter and immediately before use dilute the solution to 10 times its volume with *methyl ethyl ketone R*. Shake vigorously for 2 min and allow the organic layer to separate.

Reference solution. 0.1 mL of *zinc standard solution (5 ppm Zn) R* treated in the same manner as the test solution.

Measure the absorbance (*2.2.25*) of the organic layers at 530 nm, using the organic layer of a blank solution as the compensation liquid.

Results: the absorbance of the organic layer obtained with the test solution is not greater than that of the organic layer obtained with the reference solution.

Sterility. It complies with the test for sterility prescribed in the monograph *Radiopharmaceutical preparations (0125)*. The preparation may be released for use before completion of the test.

RADIONUCLIDIC PURITY

Gallium-67: minimum 99.8 per cent of the total radioactivity.

Gamma-ray spectrometry.

Determine the relative amounts of gallium-66 and other radionuclidic impurities present.

RADIOACTIVITY

Determine the radioactivity using a calibrated instrument.

IMPURITIES

A. gallium-66.

07/2013:2464

GALLIUM (^{68}Ga) CHLORIDE SOLUTION FOR RADIOLABELLING

Gallii (^{68}Ga) chloridi solutio ad radio-signandum

$^{68}GaCl_3$ M_r 174.3

DEFINITION

Solution containing gallium-68 in the form of gallium chloride in dilute hydrochloric acid. The preparation may contain acetone.

Content:

– *gallium-68*: 90 per cent to 110 per cent of the declared gallium-68 radioactivity at the date and time stated on the label.

CHARACTERS

Appearance: clear, colourless solution.

Half-life and nature of radiation of gallium-68: see general chapter *5.7. Table of physical characteristics of radionuclides.*

IDENTIFICATION

A. Gamma-ray spectrometry.

Result: the principal gamma photons have energies of 0.511 MeV and 1.077 MeV and, depending on the measurement geometry, a sum peak of 1.022 MeV may be observed.

B. Determine the approximate half-life by no fewer than 3 measurements of the activity of a sample in the same geometrical conditions within a suitable period of time (for example, 15 min).

Result: 62 min to 74 min.

C. pH (see Tests).

D. To a volume of 20-100 µL of the solution to be examined add 1 mL of a 1.03 g/L solution of *hydrochloric acid R*. Apply this solution to the top of a column containing *strong cation-exchange resin R*, push 5 mL of air through the column and collect the eluate. Determine the radioactivity of the eluate (A1). Elute the column with 1 mL of a 1.03 g/L solution of *hydrochloric acid R*. Determine the radioactivity of the eluate (A2). Elute the column with 1 mL of a mixture of 2 volumes of *hydrochloric acid R* and 98 volumes of *acetone R* and push 5 mL of air through the column. Determine the radioactivity of the eluate (A3) and the residual activity on the column (A4).

Calculate the percentage of radioactivity in the A3 eluate using the following expression:

$$A3 \times 100/(A1 + A2 + A3 + A4)$$

Result: the percentage of radioactivity in the A3 eluate is not less than 90 per cent.

E. To 100 µL of *silver nitrate solution R2* add 50 µL of the solution to be examined. A white precipitate is formed.

TESTS

pH: maximum 2, using a *pH indicator strip R*.

Iron: maximum 10 µg/GBq.

Atomic absorption spectrometry (*2.2.23, Method I*).

Modifier solution: 14 g/L solution of *magnesium nitrate R*.

Test solution. Dilute the solution to be examined with a 1 per cent *V/V* solution of *nitric acid R* to obtain a radioactivity concentration of 2.5 MBq/mL.

Reference solutions. Prepare the reference solutions using *iron standard solution (20 ppm Fe) R*, diluting with a 1 per cent *V/V* solution of *nitric acid R*.

Source: iron hollow-cathode lamp.

Wavelength: 248.3 nm.

Atomisation device: graphite furnace.

An example of the injection and instrument parameters for the graphic furnace atomic absorption analysis is shown below.

Internal and external protective gas: *argon R*.

Injection: 20 µL of the test solution and the reference solutions, and 1 µL of the modifier solution.

Injection temperature: 20 °C.

Furnace programme:

Step	Final temperature (°C)	Ramp time (s)	Hold time (s)	Internal protective gas flow rate (mL/min)
Drying	110	1	30	250
Drying	130	15	30	250
Pyrolysis	1400	10	20	250
Atomisation	2100	0	5	0
Cleaning	2450	1	3	250

The solution may be released for use before completion of the test.

Zinc: maximum 10 µg/GBq.

Atomic absorption spectrometry (*2.2.23, Method I*).

Test solution. Dilute the solution to be examined with a 1 per cent *V/V* solution of *nitric acid R* to obtain a radioactivity concentration of 50 MBq/mL.

Reference solutions. Prepare the reference solutions using *zinc standard solution (10 ppm Zn) R*, diluting with a 1 per cent *V/V* solution of *nitric acid R*.

Source: zinc hollow-cathode lamp.

Wavelength: 213.9 nm.

Atomisation device: air-acetylene flame.

The solution may be released for use before completion of the test.

Bacterial endotoxins (*2.6.14*): less than 175 IU/*V*, *V* being the maximum volume to be used for the preparation of a single patient dose, if intended for use in the manufacture of parenteral preparations without a further appropriate procedure for the removal of bacterial endotoxins. The solution may be released for use before completion of the test.

RADIONUCLIDIC PURITY

The solution may be released for use before completion of test B.

Gallium-68: minimum 99.9 per cent of the total radioactivity.

A. Gamma-ray spectrometry.

Limit: peaks in the gamma-ray spectrum corresponding to photons with an energy different from 0.511 MeV, 1.077 MeV, 1.022 MeV and 1.883 MeV represent not more than 0.1 per cent of the total radioactivity.

B. Germanium-68 and gamma-ray-emitting impurities. Gamma-ray spectrometry.

Determine the amount of gallium-68, germanium-68 and radionuclidic impurities with a half-life longer than 5 h. For the detection and quantification of germanium-68 and gamma-ray-emitting impurities, retain the solution to be examined for at least 48 h to allow the gallium-68 to decay to a level that permits the detection of impurities.

Result: the total radioactivity due to germanium-68 and gamma-ray-emitting impurities is not more than 0.001 per cent.

RADIOCHEMICAL PURITY

[^{68}Ga]Gallium(III) ion. Thin-layer chromatography (*2.2.27*).

Test solution. Adjust the solution to be examined to obtain a concentration of *hydrochloric acid R* of 10.3 g/L.

Reference solution (a). To 0.2 mL of the test solution add 0.3 mL of a 4 g/L solution of *sodium hydroxide R*. Use within 30 min of preparation.

Reference solution (b). To 1 mL of the test solution add 1 mL of a 10 g/L solution of *pentetic acid R* in a 4 g/L solution of *sodium hydroxide R*. Use within 30 min of preparation.

Plate: *TLC silica gel plate R*; use a glass-fibre plate.

Mobile phase: 77 g/L solution of *ammonium acetate R*, *methanol R* (50:50 *V/V*).

Application: about 5 µL.

Development: immediately, over a path of at least 10 cm.

Drying: in air.

Detection: suitable detector to determine the distribution of radioactivity.

Retardation factor: [^{68}Ga]Gallium(III) ion = 0-0.2.

System suitability: the retardation factor of the principal peak in the chromatogram obtained with reference solution (a) is not more than 0.1; the retardation factor of the principal peak in the chromatogram obtained with reference solution (b) is not less than 0.7.

Limit:

– *[^{68}Ga]gallium(III) ion*: minimum 95 per cent of the total radioactivity due to gallium-68.

Radiopharmaceutical preparations

RADIOACTIVITY

Determine the radioactivity using a calibrated instrument.

LABELLING

The label states:

- that the solution is not intended for direct administration to humans;
- the maximum volume that can be used for the preparation of a single patient dose;
- the concentration of hydrochloric acid;
- the concentration of acetone, if present;
- that the solution is intended for use in the preparation of gallium-68-labelled radiopharmaceuticals;
- a procedure to reduce the level of germanium-68 below 0.001 per cent of the total radioactivity.

IMPURITIES

A. germanium-68.

01/2013:2482

GALLIUM (^{68}Ga) EDOTREOTIDE INJECTION

Gallii (^{68}Ga) edotreotidi solutio iniectabilis

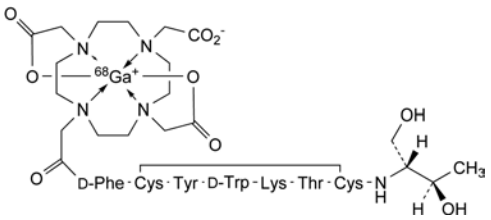

$C_{65}H_{89}{}^{68}GaN_{14}O_{18}S_2$ M_r 1487

DEFINITION

Sterile solution of a complex of gallium-68 with edotreotide (*N*-[[4,7,10-tris(carboxymethyl)-1,4,7,10-tetraazacyclododecan-1-yl]acetyl]-D-phenylalanyl-L-cysteinyl-L-tyrosyl-D-tryptophyl-L-lysyl-L-threonyl-*N*-[(1*R*,2*R*)-2-hydroxy-1-(hydroxymethyl)propyl]-L-cysteinamide cyclic (2→7)-disulfide) (gallium-68 DOTATOC).

Content:

- *gallium-68*: 90 per cent to 110 per cent of the declared gallium-68 radioactivity at the date and time stated on the label;
- *edotreotide*: maximum 50 µg per maximum recommended dose in millilitres.

CHARACTERS

Appearance: clear, colourless solution.

Half-life and nature of radiation of gallium-68: see general chapter *5.7. Table of physical characteristics of radionuclides*.

IDENTIFICATION

A. Gamma-ray spectrometry.

Result: the principal gamma photons have energies of 0.511 MeV and 1.077 MeV and, depending on the measurement geometry, a sum peak of 1.022 MeV may be observed.

B. Determine the approximate half-life by no fewer than 3 measurements of the activity of a sample in the same geometrical conditions within a suitable period of time (for example, 15 min).

Result: 62 min to 74 min.

C. Examine the chromatograms obtained in the test for other radiochemical impurities (see Tests).

Result: the principal peak in the radiochromatogram obtained with the test solution has a relative retention of 1.3 with reference to the principal peak in the chromatogram obtained with reference solution (a) using the spectrophotometer.

TESTS

pH: 4.0 to 8.0, using a *pH indicator strip R*.

Edotreotide, gallium edotreotide and other related substances. Liquid chromatography (*2.2.29*).

Test solution. The preparation to be examined.

Reference solution (a). Prepare a 50 µg/*V* solution of *edotreotide R* in a 10.3 g/L solution of *hydrochloric acid R*, *V* being the maximum recommended dose in millilitres.

Reference solution (b). Prepare a 50 µg/*V* solution of *octreotide acetate R* in a 10.3 g/L solution of *hydrochloric acid R*, *V* being the maximum recommended dose in millilitres.

Reference solution (c). Mix 0.1 mL of reference solution (a) and 0.1 mL of reference solution (b).

Column:

- *size*: *l* = 0.15 m, Ø = 3.0 mm;
- *stationary phase*: *base-deactivated octadecylsilyl silica gel for chromatography R* (3 µm).

Mobile phase:

- *mobile phase A*: *trifluoroacetic acid R*, *water R* (0.1:99.9 *V/V*);
- *mobile phase B*: *trifluoroacetic acid R*, *acetonitrile R* (0.1:99.9 *V/V*);

Time (min)	Mobile phase A (per cent *V/V*)	Mobile phase B (per cent *V/V*)
0 - 8	76	24
8 - 9	76 → 40	24 → 60
9 - 14	40	60

Flow rate: 0.6 mL/min.

Detection: spectrophotometer at 220 nm and radioactivity detector connected in series.

Injection: 20 µL.

Relative retention with reference to edotreotide (retention time = about 3.3 min): gallium edotreotide = about 1.3; octreotide = about 2.6.

System suitability: reference solution (c) using the spectrophotometer:

- *resolution*: minimum 5.0 between the peaks due to edotreotide and octreotide.

Limits: in the chromatogram obtained with the spectrophotometer:

- *edotreotide and metal complexes of edotreotide* (sum of the areas of the peaks with a relative retention with reference to edotreotide between 0.8 and 1.4): not more than the area of the principal peak in the chromatogram obtained with reference solution (a) (50 µg/*V*);
- *unspecified impurities*: for each impurity, not more than the area of the principal peak in the chromatogram obtained with reference solution (a) (50 µg/*V*); disregard any peak with a relative retention with reference to edotreotide of 0.5 or less.

Impurity D. Thin-layer chromatography (*2.2.27*).

Test solution. The preparation to be examined.

Reference solution. Dissolve 10 mg of *HEPES R* (impurity D) in *water R* and dilute to *V* with the same solvent, *V* being the maximum recommended dose in millilitres. Dilute 1.0 mL of the solution to 50.0 mL with *water R*.

Plate: *TLC silica gel F_{254} plate R*; use an aluminium plate.

Mobile phase: *water R*, *acetonitrile R* (25:75 *V/V*).

Radiopharmaceutical preparations

Application: (*V*/2000) mL, *V* being the maximum recommended dose in millilitres; apply portions of 1 µL and dry with a current of warm air after each application.

Development: over 2/3 of the plate.

Detection: expose to iodine vapour for 4 min.

Retardation factor: impurity D = about 0.3.

System suitability: reference solution:

– the chromatogram shows a clearly visible spot.

Limit:

– *impurity D*: any spot due to impurity D is not more intense than the corresponding spot in the chromatogram obtained with the reference solution (200 µg/*V*).

Ethanol. Gas chromatography (*2.2.28*).

Internal standard solution. Dilute 1 mL of *propanol R* to 1000 mL with *water R*.

Test solution. Dilute 0.10 mL of the preparation to be examined to 10.0 mL with the internal standard solution.

Reference solution. Dilute 1.0 mL of *anhydrous ethanol R* to 100.0 mL with the internal standard solution. Dilute 1.0 mL of this solution to 10.0 mL with the internal standard solution.

Column:

– *material*: fused silica;

– *size*: *l* = 30 m, Ø = 0.53 mm;

– *stationary phase*: *macrogol 20 000 R* (film thickness 1.0 µm).

Carrier gas: *helium for chromatography R*.

Flow rate: 10 mL/min.

Split ratio: 1:10.

Temperature:

– *column*: 35 °C;

– *injection port*: 140 °C;

– *detector*: 220 °C.

Detection: flame ionisation.

Injection: 1.0 µL.

System suitability: reference solution:

– *retention time*: ethanol = 2 min to 4 min;

– *resolution*: minimum 5.0 between the peaks due to ethanol and propanol.

Limit:

– *ethanol*: maximum 10 per cent *V/V* and maximum 2.5 g per administration, taking the density (*2.2.5*) to be 0.790 g/mL.

Sterility. It complies with the test for sterility prescribed in the monograph *Radiopharmaceutical preparations (0125)*. The preparation may be released for use before completion of the test.

Bacterial endotoxins (*2.6.14*): less than 175/*V* IU/mL, *V* being the maximum recommended dose in millilitres. The preparation may be released for use before completion of the test.

RADIONUCLIDIC PURITY

The preparation may be released for use before completion of test B.

Gallium-68: minimum 99.9 per cent of the total radioactivity.

A. Gamma-ray spectrometry.

Limit: peaks in the gamma-ray spectrum corresponding to photons with an energy different from 0.511 MeV, 1.077 MeV, 1.022 MeV and 1.883 MeV represent not more than 0.1 per cent of the total radioactivity.

B. Germanium-68 and gamma-ray-emitting impurities. Gamma-ray spectrometry.

Determine the amount of gallium-68, germanium-68 and radionuclidic impurities with a half-life longer than 5 h. For the detection and quantification of germanium-68 and gamma-ray-emitting impurities, retain the preparation to be examined for at least 48 h to allow the gallium-68 to decay to a level that permits the detection of impurities.

Result: the total radioactivity due to germanium-68 and gamma-ray-emitting impurities is not more than 0.001 per cent.

RADIOCHEMICAL PURITY

– *[^{68}Ga]gallium edotreotide*: minimum 91 per cent of the total radioactivity due to gallium-68.

Impurity A. Thin-layer chromatography (*2.2.27*).

Test solution. The preparation to be examined.

Reference solution (a). Dilute *gallium (^{68}Ga) chloride solution R* with *water R* to obtain a final concentration of 10 g/L of *hydrochloric acid R*. To 1 mL of this solution add 1.5 mL of a 4 g/L solution of *sodium hydroxide R*. Use within 30 min of preparation.

Reference solution (b). Dilute *gallium (^{68}Ga) chloride solution R* with *water R* to obtain a final concentration of 10 g/L of *hydrochloric acid R*. To 1 mL of this solution add 1 mL of a solution containing 10 g/L of *pentetic acid R* and 4 g/L of *sodium hydroxide R*. Use within 30 min after preparation.

Plate: *TLC silica gel plate R*; use a glass-fibre plate.

Mobile phase: 77 g/L solution of *ammonium acetate R* in *water R*, *methanol R* (50:50 *V/V*).

Application: 5 µL.

Development: immediately, over 2/3 of the plate.

Drying: in air.

Detection: suitable detector to determine the distribution of radioactivity.

Retardation factors: impurity A = 0.0-0.1; [^{68}Ga]gallium edotreotide = 0.8-1.0.

System suitability: the retardation factor of the principal signal in the chromatogram obtained with reference solution (a) is not more than 0.1; the retardation factor of the principal signal in the chromatogram obtained with reference solution (b) is more than 0.7.

Limit:

– *impurity A*: not more than 3 per cent of the total radioactivity due to gallium-68.

Other radiochemical impurities. Liquid chromatography (*2.2.29*) as described in the test for edotreotide, gallium edotreotide and other related substances. If necessary, dilute the test solution with *water R* to a radioactivity concentration suitable for the radioactivity detector.

Examine the chromatogram recorded using the radioactivity detector and locate the peak due to [^{68}Ga]gallium edotreotide by comparison with the chromatogram obtained with reference solution (a) and the spectrophotometer.

Relative retention with reference to [^{68}Ga]gallium edotreotide (retention time = about 4.2 min): impurity B = about 0.3.

Limit:

– *impurity B*: not more than 2 per cent of the total radioactivity due to gallium-68.

Calculate the percentage of radioactivity due to [^{68}Ga]gallium edotreotide using the following expression:

$$(100 - A) \times T$$

A = percentage of radioactivity due to impurity A determined in the test for impurity A under radiochemical purity;

T = proportion of the area of the peak due to [^{68}Ga]gallium edotreotide relative to the total areas of the peaks in the chromatogram obtained with the test solution.

RADIOACTIVITY

Determine the radioactivity using a calibrated instrument.

Radiopharmaceutical preparations

LABELLING

The label states the percentage content of ethanol in the preparation.

IMPURITIES

Specified impurities: A, B, C, D.

A. [^{68}Ga]gallium in colloidal form,

B. [^{68}Ga]gallium(III) ion,

C. germanium-68,

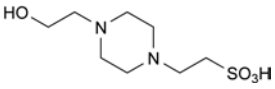

D. 2-[4-(2-hydroxyethyl)piperazin-1-yl]ethanesulfonic acid (HEPES).

01/2008:1922

HUMAN ALBUMIN INJECTION, IODINATED (^{125}I)

Iodinati (^{125}I) humani albumini solutio iniectabilis

DEFINITION

Sterile, endotoxin-free solution of human albumin labelled with iodine-125. It may contain a suitable buffer and an antimicrobial preservative. The human albumin used complies with the requirements of the monograph on *Human albumin solution (0255)*.

Content: 90 per cent to 110 per cent of the declared iodine-125 radioactivity at the date stated on the label.

Purity:

- minimum of 99.0 per cent of the total radioactivity corresponds to iodine-125,
- minimum of 80 per cent of the total radioactivity is associated with the albumin fractions II to V,
- maximum of 5 per cent of the total radioactivity corresponds to unbound iodide.

Content of albumin: 95 per cent to 105 per cent of the declared albumin content stated on the label.

CHARACTERS

Appearance: clear, colourless to yellowish solution.

Half-life and nature of radiation of iodine-125: see general chapter *5.7. Table of physical characteristics of radionuclides*.

IDENTIFICATION

A. Gamma-ray and X-ray spectrometry.

Comparison: standardised iodine-125 solution, or by using a calibrated instrument. Standardised iodine-125 solutions and/or standardisation services are available from the competent authority.

Results: the spectrum obtained with the preparation to be examined does not differ significantly from that obtained with a standardised iodine-125 solution, apart from any differences attributable to the presence of iodine-126. The most prominent photon has an energy of 0.027 MeV, corresponding to the characteristic X-ray of tellurium, gamma photons of an energy of 0.035 MeV are also present. Iodine-126 has a half-life of 13.11 days and its most prominent gamma photons have energies of 0.388 MeV and 0.666 MeV.

B. Examine by a suitable immunoelectrophoresis technique (*2.7.1*). Using antiserum to normal human serum, compare normal human serum and the preparation to be examined, both diluted if necessary. The main component of the preparation to be examined corresponds to the main component of the normal human serum. The diluted solution may show the presence of small quantities of other plasma proteins.

TESTS

pH (*2.2.3*): 5.0 to 9.0.

Albumin

Reference solution. Dilute *human albumin solution R* with a 9 g/L solution of *sodium chloride R* to a concentration of 5 mg of albumin per millilitre.

To 1.0 mL of the preparation to be examined and to 1.0 mL of the reference solution add 4.0 mL of *biuret reagent R* and mix. After exactly 30 min, measure the absorbance (*2.2.25*) of each solution at 540 nm, using as the compensation liquid a 9 g/L solution of *sodium chloride R* treated in the same manner. From the absorbances measured, calculate the content of albumin in the injection to be examined in milligrams per millilitre.

Sterility. It complies with the test for sterility prescribed in the monograph on *Radiopharmaceutical preparations (0125)*.

Bacterial endotoxins (*2.6.14*): less than 175/*V* IU/mL, *V* being the maximum recommended dose in millilitres.

RADIONUCLIDIC PURITY

Iodine-125: minimum 99.0 per cent of the total radioactivity.

Gamma-ray and X-ray spectroscopy.

Comparison: standardised solution of iodine-125.

Determine the relative amounts of iodine-125 and iodine-126 present.

RADIOCHEMICAL PURITY

Iodine-125 in albumin fractions II to V, iodine-125 corresponding to unbound iodide. Size-exclusion chromatography (*2.2.30*).

Test solution. Mix 0.25 mL of the preparation to be examined with 0.25 mL of the mobile phase. Use immediately after mixing.

Reference solution. *Human albumin solution R* or another appropriate human albumin standard diluted with the mobile phase to a suitable albumin concentration.

Column:

- *size*: *l* = 0.6 m, Ø = 7.5 mm,
- *stationary phase*: *silica gel for size-exclusion chromatography R*,
- *temperature*: 25 °C.

Mobile phase: dissolve 11.24 g of *potassium dihydrogen phosphate R*, 42.0 g of *disodium hydrogen phosphate R*, 11.70 g of *sodium chloride R* in 2000 mL of *water R*.

Flow rate: 0.6 mL/min.

Detection: spectrophotometer at 280 nm and radioactivity detector set for iodine-125 connected in series.

Injection: loop injector.

Run time: 85 min.

Retention times:

Peak No.	Fraction	Description of the compound	Retention time (min)
1	I	High molecular mass compound	18 - 20
2	II	Poly III albumin	23 - 24
3	III	Poly II albumin	25 - 26
4	IV	Poly I albumin	28
5	V	Human serum albumin	29 - 31
6	VI	Iodide	43 - 45

Radiopharmaceutical preparations

The main peak in the chromatogram obtained with the reference solution corresponds to fraction V.

Limits:

- *radioactivity in fractions II to V*: minimum 80 per cent of the total radioactivity applied to the column,
- *iodine-125 in fraction VI*: maximum 5 per cent of the total radioactivity.

RADIOACTIVITY

Measure the radioactivity using suitable equipment by comparison with a standardised iodine-125 solution or by measurement with a calibrated instrument.

LABELLING

The label states:

- the amount of albumin,
- the maximum volume to be injected.

01/2008:1227
corrected 7.0

INDIUM (^{111}In) CHLORIDE SOLUTION

Indii (^{111}In) chloridi solutio

DEFINITION

Sterile solution of indium-111 as the chloride in aqueous hydrochloric acid containing no additives.

Indium-111: 90 per cent to 110 per cent of the declared indium-111 radioactivity at the date and time stated on the label.

Specific radioactivity: minimum 1.85 GBq of indium-111 per microgram of indium.

PRODUCTION

No carrier indium is added.

CHARACTERS

Appearance: clear, colourless solution.

Half-life and nature of radiation of indium-111: see general chapter *5.7. Table of physical characteristics of radionuclides*.

IDENTIFICATION

A. Gamma-ray and X-ray spectrometry. *Carry out the test after allowing sufficient time for short-lived impurities such as indium-110m to decay*.

   Results: the most prominent gamma photons of indium-111 have energies of 0.171 MeV and 0.245 MeV.

B. To 100 µL of *silver nitrate solution R2* add 50 µL of the preparation to be examined. A white precipitate is formed.

C. pH (see Tests).

D. Examine the chromatogram obtained in the test for radiochemical purity (see Tests).

   Result: the retardation factor of the principal peak in the radiochromatogram obtained with the test solution is 0.5 to 0.8.

TESTS

pH (*2.2.3*): 1.0 to 2.0.

Cadmium: maximum 0.40 µg/mL.

Atomic absorption spectrometry (*2.2.23, Method I*).

Test solution. Dilute 0.05 mL of the preparation to be examined to a suitable volume with a suitable concentration of *hydrochloric acid R*.

Reference solutions. Prepare the reference solutions using *cadmium standard solution (0.1 per cent Cd) R*, diluting with the same concentration of *hydrochloric acid R* as in the test solution.

Source: cadmium hollow-cathode lamp.

Wavelength: 228.8 nm.

Atomisation device: electrothermal.

Copper: maximum 0.15 µg/mL.

Atomic absorption spectrometry (*2.2.23, Method I*).

Test solution. Dilute 0.1 mL of the preparation to be examined to a suitable volume with a suitable concentration of *hydrochloric acid R*.

Reference solutions. Prepare the reference solutions using *copper standard solution (0.1 per cent Cu) R* diluting with the same concentration of *hydrochloric acid R* as in the test solution.

Source: copper hollow-cathode lamp.

Wavelength: 324.8 nm.

Atomisation device: electrothermal.

Iron: maximum 0.60 µg/mL.

Atomic absorption spectrometry (*2.2.23, Method I*).

Test solution. Dilute 0.1 mL of the preparation to be examined to a suitable volume with a suitable concentration of *hydrochloric acid R*.

Reference solutions. Prepare the reference solutions using *iron standard solution (0.1 per cent Fe) R* diluting with the same concentration of *hydrochloric acid R* as in the test solution.

Source: iron hollow-cathode lamp

Wavelength: 248.3 nm.

Atomisation device: electrothermal.

Sterility. It complies with the test for sterility prescribed in the monograph *Radiopharmaceutical preparations (0125)*. The preparation may be released for use before completion of the test.

RADIONUCLIDIC PURITY

Indium-111. Gamma-ray and X-ray spectrometry.

Comparison: standardised indium-111 solution.

Result: the spectrum obtained with the preparation to be examined does not differ significantly from that obtained with a standardised indium-111 solution apart from any differences due to the presence of indium-114m.

Impurity A: maximum 0.25 per cent of the total radioactivity.

Gamma-ray spectrometry. *Carry out the test after allowing sufficient time for short-lived impurities such as indium-110m to decay*.

Take a volume equivalent to 30 MBq and record the gamma-ray spectrum using a suitable detector with a shield of lead, 6 mm thick, placed between the sample and the detector.

Results: the response in the region corresponding to the 0.558 MeV photon and the 0.725 MeV photon of indium-114m does not exceed that obtained using 75 kBq of a standardised indium-114m solution measured under the same conditions, when all measurements are calculated with reference to the date and time of administration.

RADIOCHEMICAL PURITY

[^{111}In]Indium(III) ion. Thin-layer chromatography (*2.2.27*)

Test solution. The preparation to be examined.

Plate: *TLC silica gel plate R*. Use silica gel as the coating substance on a glass-fibre sheet.

Mobile phase: 9.0 g/L solution of *sodium chloride R* adjusted to pH 2.3 ± 0.05 with *dilute hydrochloric acid R*.

Application: 5 µL.

Development: immediately over a path of 15 cm.

Drying: in a current of cold air.

Detection: suitable detector to determine the distribution of radioactivity.

Retardation factor: [^{111}In]indium(III) ion = 0.5 to 0.8.

Limit:

- *[^{111}In]indium(III) ion* : minimum 95 per cent of the radioactivity due to indium-111.

Radiopharmaceutical preparations

RADIOACTIVITY

Determine the radioactivity using a calibrated instrument.

IMPURITIES

A. indium-114m.

01/2008:1109
corrected 7.0

INDIUM (^{111}In) OXINE SOLUTION

Indii (^{111}In) oxini solutio

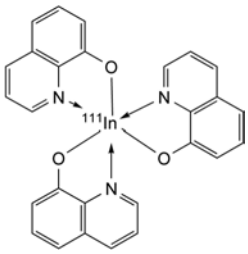

$C_{27}H_{18}[^{111}In]N_3O_3$ M_r 543.5

DEFINITION

Sterile solution of indium-111 in the form of a complex with 8-hydroxyquinoline. It may contain suitable surface active agents and may be made isotonic by the addition of sodium chloride and a suitable buffer.

Indium-111: 90 per cent to 110 per cent of the declared indium-111 radioactivity at the date and time stated on the label.

Specific radioactivity: minimum 1.85 GBq of indium-111 per microgram of indium.

PRODUCTION

No carrier indium is added.

CHARACTERS

Appearance: clear, colourless solution.

Half-life and nature of radiation of indium-111: see general chapter *5.7. Table of physical characteristics of radionuclides*.

IDENTIFICATION

A. Gamma-ray and X-ray spectrometry. *Carry out the test after allowing sufficient time for short-lived impurities such as indium-110m to decay*.

   Results: the most prominent gamma photons of indium-111 have energies of 0.171 MeV and 0.245 MeV.

B. Place 5-10 mg of *magnesium oxide R* in a glass container about 20 mm in internal diameter. Add 20 µL of the preparation to be examined. Examine in ultraviolet light at 365 nm. Bright yellow fluorescence is produced.

C. The distribution of radioactivity between the organic and aqueous phases in the test for radiochemical purity (see Tests) contributes to the identification of the preparation.

TESTS

pH (*2.2.3*): 6.0 to 7.5.

Sterility. It complies with the test for sterility prescribed in the monograph *Radiopharmaceutical preparations (0125)*. The preparation may be released for use before completion of the test.

RADIONUCLIDIC PURITY

Indium-111. Gamma-ray and X-ray spectrometry.

Comparison: standardised indium-111 solution.

Result: the spectrum obtained with the preparation to be examined does not differ significantly from that obtained with a standardised indium-111 solution, apart from any differences due to the presence of indium-114m.

Impurity A: maximum 0.25 per cent of the total radioactivity.

Gamma-ray spectrometry. *Carry out the test after allowing sufficient time for short-lived impurities such as indium-110m to decay*.

Take a volume equivalent to 30 MBq and record the gamma-ray spectrum using a suitable detector with a shield of lead, 6 mm thick, placed between the sample and the detector.

Results: the response in the region corresponding to the 0.558 MeV photon and the 0.725 MeV photon of indium-114m does not exceed that obtained using 75 kBq of a standardised indium-114m solution measured under the same conditions, when all measurements are calculated with reference to the date and time of administration.

RADIOCHEMICAL PURITY

[^{111}In]Indium oxine. To a silanised separating funnel containing 3 mL of a 9 g/L solution of *sodium chloride R* add 100 µL of the preparation to be examined and mix. Add 6 mL of *octanol R* and shake vigorously. Allow the phases to separate and then run the lower layer into a suitable vial for counting. Allow the upper layer to drain completely into a similar vial. Add 1 mL of *octanol R* to the separating funnel, shake vigorously and drain into the vial containing the organic fraction. Add 5 mL of *dilute hydrochloric acid R* to the separating funnel, shake vigorously and drain these rinsings into a 3rd vial. Seal each vial and, using a suitable instrument, measure the radioactivity in each. Calculate the radiochemical purity by expressing the radioactivity of the [^{111}In]indium oxine, found in the organic phase, as a percentage of the total radioactivity due to indium-111 measured in the 3 solutions.

Result: minimum 90 per cent of the radioactivity due to indium-111.

RADIOACTIVITY

Determine the radioactivity using a calibrated instrument.

LABELLING

The label states that the solution is not for direct administration to humans.

IMPURITIES

A. indium-114m.

01/2008:0670
corrected 7.0

INDIUM (^{111}In) PENTETATE INJECTION

Indii (^{111}In) pentetatis solutio iniectabilis

DEFINITION

Sterile solution containing indium-111 in the form of indium diethylenetriaminepenta-acetate. It may contain calcium and may be made isotonic by the addition of sodium chloride and a suitable buffer.

Indium-111: 90 per cent to 110 per cent of the declared indium-111 radioactivity at the date and time stated on the label.

CHARACTERS

Appearance: clear, colourless solution.

Half-life and nature of radiation of Indium-111: see general chapter *5.7. Table of physical characteristics of radionuclides*.

IDENTIFICATION

A. Gamma-ray and X-ray spectrometry.

Radiopharmaceutical preparations

Results: the most prominent gamma photons of indium-111 have energies of 0.171 MeV and 0.245 MeV.

B. Examine the chromatogram obtained in the test for radiochemical purity (see Tests). The distribution of radioactivity contributes to the identification of the preparation.

TESTS

pH (*2.2.3*): 7.0 to 8.0.

Cadmium: maximum 5 µg/mL.

Atomic absorption spectrometry (*2.2.23, Method II*).

Test solution. Mix 0.1 mL of the preparation to be examined with 0.9 mL of a mixture of 1 volume of *hydrochloric acid R* and 99 volumes of *water R*.

Reference solutions. Prepare the reference solutions using *cadmium standard solution (0.1 per cent Cd) R* and diluting with a mixture of 1 volume of *hydrochloric acid R* and 99 volumes of *water R*.

Source: cadmium hollow-cathode lamp.

Wavelength: 228.8 nm.

Atomisation device: air-acetylene flame.

Uncomplexed diethylenetriaminepenta-acetic acid: maximum 0.4 mg/mL.

In a micro test-tube, mix 100 µL of the preparation to be examined with 100 µL of a freshly prepared 1 g/L solution of *hydroxynaphthol blue, sodium salt R* in a 42 g/L solution of *sodium hydroxide R*. Add 50 µL of a 0.15 g/L solution of *calcium chloride R*. The solution remains pinkish-violet or changes from blue to pinkish-violet.

Sterility. It complies with the test for sterility prescribed in the monograph *Radiopharmaceutical preparations (0125)*. The preparation may be released for use before completion of the test.

Bacterial endotoxins (*2.6.14*): less than 14/*V* IU/mL, *V* being the maximum recommended dose in millilitres.

RADIONUCLIDIC PURITY

Indium-111. Gamma-ray and X-ray spectrometry.

Comparison: standardised indium-111 solution.

Result: the spectrum obtained with the preparation to be examined does not differ significantly from that obtained with a standardised indium-111 solution apart from any differences due to the presence of indium-114m.

Impurity A: maximum 0.2 per cent of the total radioactivity at the date and time of administration.

Gamma-ray spectrometry.

Retain a sample of the preparation to be examined for a sufficient time to allow the indium-111 radioactivity to decay to a sufficiently low level to permit the detection of radionuclidic impurities. Record the gamma-ray spectrum of the decayed material in a suitable instrument calibrated with the aid of a standardised indium-114m solution.

Result: indium-114m has a half-life of 49.5 days and its most prominent gamma photon has an energy of 0.190 MeV.

RADIOCHEMICAL PURITY

[^{111}In]Indium pentetate. Thin-layer chromatography (*2.2.27*).

Test solution. The preparation to be examined.

Plate: *TLC silica gel plate R*; use silica gel as the coating substance on a glass-fibre sheet heated at 110 °C for 10 min.

Mobile phase: 9 g/L solution of *sodium chloride R*.

Application: 5-10 µL.

Development: over a path of 10-15 cm in about 10 min.

Drying: in air.

Detection: suitable detector to determine the distribution of radioactivity.

Identification of spots: [^{111}In]indium pentetate migrates near to the solvent front.

Limit:

– *[^{111}In]indium pentetate* : minimum 95 per cent of the radioactivity due to indium-111.

RADIOACTIVITY

Determine the radioactivity using a calibrated instrument.

IMPURITIES

A. indium-114m.

01/2008:1113
corrected 7.0

IOBENGUANE (^{123}I) INJECTION

Iobenguani (^{123}I) solutio iniectabilis

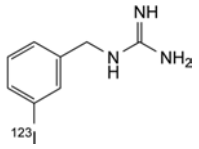

$C_8H_{10}[^{123}I]N_3$

DEFINITION

Sterile, bacterial endotoxin-free solution of 1-(3-[^{123}I]iodobenzyl)guanidine or its salts. It may contain a suitable buffer, a suitable labelling catalyst such as ionic copper, a suitable labelling stabiliser such as ascorbic acid and antimicrobial preservatives.

Iodine-123: 90 per cent to 110 per cent of the declared iodine-123 radioactivity at the date and time stated on the label.

Specific radioactivity: minimum 10 GBq of iodine-123 per gram of iobenguane base.

CHARACTERS

Appearance: clear, colourless or slightly yellow solution.

Half-life and nature of radiation of iodine-123: see general chapter *5.7. Table of physical characteristics of radionuclides*.

IDENTIFICATION

A. Gamma-ray and X-ray spectrometry.

Result: the energy of the most prominent gamma photon of iodine-123 is 0.159 MeV.

B. Examine the chromatogram obtained in the test for radiochemical purity (see Tests). The distribution of the radioactivity contributes to the identification of the preparation.

TESTS

pH (*2.2.3*): 3.5 to 8.0.

Specific radioactivity. The specific radioactivity is calculated from the results obtained in the test for radiochemical purity. Determine the content of iobenguane sulfate from the areas of the peaks due to iobenguane in the chromatograms obtained with the test solution and reference solution (b). Calculate the concentration as iobenguane base by multiplying the result obtained in the test by 0.85.

Sterility. It complies with the test for sterility prescribed in the monograph *Radiopharmaceutical preparations (0125)*. The preparation may be released for use before completion of the test.

Bacterial endotoxins (*2.6.14*): less than 175/*V* IU/mL, *V* being the maximum recommended dose in millilitres.

RADIONUCLIDIC PURITY

The preparation may be released for use before completion of the test.

Radiopharmaceutical preparations

Radionuclides other than iodine-123: maximum 0.35 per cent of the total radioactivity.

Gamma-ray and X-ray spectrometry.

Record the gamma-ray spectrum and the X-ray spectrum using a suitable instrument.

Determine the relative amounts of iodine-125, tellurium-121 and other radionuclidic impurities present. For their determination, retain the preparation to be examined for a sufficient time to allow iodine-123 to decay to a level which permits the detection of radionuclidic impurities. No radionuclides with a half-life longer than that of iodine-125 are detected.

RADIOCHEMICAL PURITY

[^{123}I]Iobenguane. Liquid chromatography (*2.2.29*).

Test solution. The preparation to be examined.

Reference solution (a). Dissolve 0.100 g of *sodium iodide R* in the mobile phase and dilute to 100 mL with the mobile phase.

Reference solution (b). Dissolve 10.0 mg of *iobenguane sulfate CRS* in 25 mL of the mobile phase and dilute to 50.0 mL with the mobile phase.

Column:

- *size*: *l* = 0.25 m, Ø = 4.0 mm;
- *stationary phase*: *silica gel for chromatography R* (5 µm).

Mobile phase: 80 g/L solution of *ammonium nitrate R*, *dilute ammonia R2*, *methanol R* (1:2:27 *V*/*V*/*V*).

Flow rate: 1.0 mL/min.

Detection: suitable detector to determine the distribution of radioactivity and spectrophotometer at 254 nm, provided with a flow-cell.

Injection: 10 µL.

Limits:

- *[^{123}I]iobenguane*: minimum 95 per cent of the radioactivity due to iodine-123;
- *impurity A*: maximum 4 per cent of the radioactivity due to iodine-123;
- *other impurities*: maximum 1 per cent of the radioactivity due to iodine-123.

RADIOACTIVITY

Determine the radioactivity using a calibrated instrument.

STORAGE

Protected from light.

LABELLING

The label states the specific radioactivity expressed in GBq of iodine-123 per gram of iobenguane base.

IMPURITIES

A. [^{123}I]iodide,

B. iodine-125,

C. tellurium-121.

01/2008:1111
corrected 7.0

IOBENGUANE (^{131}I) INJECTION FOR DIAGNOSTIC USE

Iobenguani (^{131}I) solutio iniectabilis ad usum diagnosticum

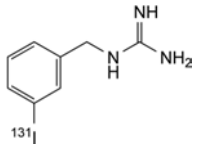

$C_8H_{10}[^{131}I]N_3$

DEFINITION

Sterile, bacterial endotoxin-free solution of 1-(3-[^{131}I]iodobenzyl)guanidine or its salts. It may contain a suitable buffer, a suitable labelling catalyst such as ionic copper, a suitable labelling stabiliser such as ascorbic acid, and antimicrobial preservatives.

Iodine-131: 90 per cent to 110 per cent of the declared iodine-131 radioactivity at the date and time stated on the label.

Specific radioactivity: minimum 20 GBq of iodine-131 per gram of iobenguane base.

CHARACTERS

Appearance: clear, colourless or slightly yellow solution.

Half-life and nature of radiation of iodine-131: see general chapter *5.7. Table of physical characteristics of radionuclides*.

IDENTIFICATION

A. Gamma-ray spectrometry.
   Result: the most prominent gamma photon of iodine-131 has an energy of 0.365 MeV.

B. Examine the chromatogram obtained in the test for radiochemical purity (see Tests). The distribution of the radioactivity contributes to the identification of the preparation.

TESTS

pH (*2.2.3*): 3.5 to 8.0.

Specific radioactivity. The specific radioactivity is calculated from the results obtained in the test for radiochemical purity. Determine the content of iobenguane sulfate from the areas of the peaks due to iobenguane in the chromatograms obtained with the test solution and reference solution (b). Calculate the concentration as iobenguane base by multiplying the result obtained in the test by 0.85.

Sterility. It complies with the test for sterility prescribed in the monograph *Radiopharmaceutical preparations (0125)*. The preparation may be released for use before completion of the test.

Bacterial endotoxins (*2.6.14*): less than 175/*V* IU/mL, *V* being the maximum recommended dose in millilitres.

RADIONUCLIDIC PURITY

Iodine-131: minimum 99.9 per cent of the total radioactivity.

Gamma-ray spectrometry.

Determine the relative amounts of iodine-131, iodine-133, iodine-135 and other radionuclidic impurities present.

RADIOCHEMICAL PURITY

[^{131}I]Iobenguane. Liquid chromatography (*2.2.29*).

Test solution. The preparation to be examined.

Reference solution (a). Dissolve 0.100 g of *sodium iodide R* in the mobile phase and dilute to 100 mL with the mobile phase.

Radiopharmaceutical preparations

Reference solution (b). Dissolve 10.0 mg of *iobenguane sulfate CRS* in 25 mL of the mobile phase and dilute to 50.0 mL with the mobile phase.

Column:

- *size*: *l* = 0.25 m, Ø = 4.0 mm;
- *stationary phase*: *silica gel for chromatography R* (5 µm).

Mobile phase: 80 g/L solution of *ammonium nitrate R*, *dilute ammonia R2*, *methanol R* (1:2:27 *V*/*V*/*V*).

Flow rate: 1.0 mL/min.

Detection: suitable detector to determine the distribution of radioactivity and spectrophotometer at 254 nm, provided with a flow-cell.

Injection: 10 µL.

Limits:

- *[^{131}I]iobenguane*: minimum 94 per cent of the radioactivity due to iodine-131;
- *impurity A*: maximum 5 per cent of the radioactivity due to iodine-131;
- *other impurities*: maximum 1 per cent of the radioactivity due to iodine-131.

RADIOACTIVITY

Determine the radioactivity using a calibrated instrument.

STORAGE

Protected from light.

LABELLING

The label states the specific radioactivity expressed in GBq of iodine-131 per gram of iobenguane base.

IMPURITIES

A. [^{131}I]iodide,

B. iodine-133,

C. iodine-135.

01/2008:1112
corrected 7.0

IOBENGUANE (^{131}I) INJECTION FOR THERAPEUTIC USE

Iobenguani (^{131}I) solutio iniectabilis ad usum therapeuticum

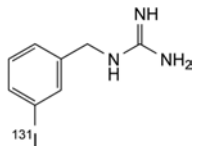

C_8H_{10} [^{131}I] N_3

DEFINITION

Sterile, bacterial endotoxin-free solution of 1-(3-[^{131}I]iodobenzyl)guanidine or its salts. It may contain a suitable buffer, a suitable labelling catalyst such as ionic copper, a suitable labelling stabiliser such as ascorbic acid, and antimicrobial preservatives.

Iodine-131: 90 per cent to 110 per cent of the declared iodine-131 radioactivity at the date and time stated on the label.

Specific radioactivity: minimum 400 GBq of iodine-131 per gram of iobenguane base.

CHARACTERS

Appearance: clear, colourless or slightly yellow solution.

Half-life and nature of radiation of iodine-131: see general chapter *5.7. Table of physical characteristics of radionuclides*.

IDENTIFICATION

A. Gamma-ray spectrometry.
   Result: the most prominent gamma photon of iodine-131 has an energy of 0.365 MeV.

B. Examine the chromatogram obtained in the test for radio-chemical purity (see Tests). The distribution of the radioactivity contributes to the identification of the preparation.

TESTS

pH (*2.2.3*): 3.5 to 8.0.

Specific radioactivity. The specific radioactivity is calculated from the results obtained in the test for radiochemical purity. Determine the content of iobenguane sulfate from the areas of the peaks due to iobenguane in the chromatograms obtained with the test solution and reference solution (b). Calculate the concentration as iobenguane base by multiplying the result obtained in the test by 0.85.

Sterility. It complies with the test for sterility prescribed in the monograph *Radiopharmaceutical preparations (0125)*. The preparation may be released for use before completion of the test.

Bacterial endotoxins (*2.6.14*): less than 175/*V* IU/mL, *V* being the maximum recommended dose in millilitres.

RADIONUCLIDIC PURITY

Iodine-131: minimum 99.9 per cent of the total radioactivity.

Gamma-ray spectrometry.

Determine the relative amounts of iodine-131, iodine-133, iodine-135 and other radionuclidic impurities present.

RADIOCHEMICAL PURITY

[^{131}I]Iobenguane. Liquid chromatography (*2.2.29*).

Test solution. The preparation to be examined.

Reference solution (a). Dissolve 0.100 g of *sodium iodide R* in the mobile phase and dilute to 100 mL with the mobile phase.

Reference solution (b). Dissolve 10.0 mg of *iobenguane sulfate CRS* in 25 mL of the mobile phase and dilute to 50.0 mL with the mobile phase.

Column:

- *size*: *l* = 0.25 m, Ø = 4.0 mm;
- *stationary phase*: *silica gel for chromatography R* (5 µm).

Mobile phase: 80 g/L solution of *ammonium nitrate R*, *dilute ammonia R2*, *methanol R* (1:2:27 *V*/*V*/*V*).

Flow rate: 1.0 mL/min.

Detection: suitable detector to determine the distribution of radioactivity and spectrophotometer at 254 nm, provided with a flow-cell.

Injection: 10 µL.

Limits:

- *[^{131}I]iobenguane*: minimum 92 per cent of the radioactivity due to iodine-131;
- *impurity A*: maximum 7 per cent of the radioactivity due to iodine-131;
- *other impurities*: maximum 1 per cent of the radioactivity due to iodine-131.

RADIOACTIVITY

Determine the radioactivity using a calibrated instrument.

STORAGE

Protected from light.

LABELLING

The label states the specific radioactivity expressed in GBq of iodine-131 per gram of iobenguane base.

IMPURITIES

A. [^{131}I]iodide,

B. iodine-133,

C. iodine-135.

01/2010:2351

IOBENGUANE SULFATE FOR RADIOPHARMACEUTICAL PREPARATIONS

Iobenguani sulfas ad radiopharmaceutica

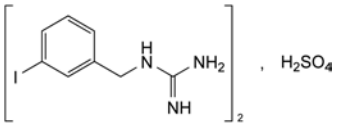

$C_{16}H_{22}I_2N_6O_4S$ M_r 648

DEFINITION

Bis[(3-iodobenzyl)guanidine] sulfate.

Content: 98.0 per cent to 102.0 per cent (dried substance).

CHARACTERS

Appearance: white or almost white crystals.

IDENTIFICATION

A. Infrared absorption spectrophotometry (*2.2.24*).
Comparison: *Ph. Eur. reference spectrum of iobenguane sulfate.*

B. Dissolve about 10 mg in 1 mL of *water R* with gentle heating. The solution gives reaction (a) of sulfates (*2.3.1*).

TESTS

Impurity A. Liquid chromatography (*2.2.29*). *Prepare the solutions and the mobile phase immediately before use.*

Test solution. Dissolve 10.0 mg of the substance to be examined in 1 mL of the mobile phase and dilute to 5.0 mL with the mobile phase.

Reference solution (a). Dissolve 10.0 mg of *iobenguane sulfate CRS* in 1 mL of the mobile phase and dilute to 5.0 mL with the mobile phase.

Reference solution (b). Dissolve 23.1 mg of *3-iodobenzylammonium chloride R* (salt of impurity A) in 1 mL of the mobile phase and dilute to 10.0 mL with the mobile phase.

Reference solution (c). Mix 1 mL of reference solution (a) and 1 mL of reference solution (b).

Reference solution (d). Dilute 0.1 mL of reference solution (b) to 10.0 mL with the mobile phase.

Column:
- *size*: *l* = 0.25 m, Ø = 4.0 mm;
- *stationary phase*: *silica gel for chromatography R* (5 µm);
- *temperature*: maintain at a constant temperature between 20 °C and 30 °C.

Mobile phase: mix 40 mL of an 80 g/L solution of *ammonium nitrate R*, 80 mL of *dilute ammonia R2* and 1080 mL of *methanol R*.

Flow rate: 1 mL/min.

Detection: spectrophotometer at 254 nm.

Injection: 20 µL of the test solution and reference solutions (c) and (d).

Run time: 15 min.

Relative retention with reference to iobenguane (retention time = about 7 min): impurity A = about 0.2.

System suitability: reference solution (c):
- *resolution*: minimum 4.0 between the peaks due to impurity A and iobenguane.

Limit:
- *impurity A*: not more than the area of the corresponding peak in the chromatogram obtained with reference solution (d) (1.0 per cent).

Loss on drying (*2.2.32*): maximum 3.0 per cent, determined on 0.100 g by drying in an oven at 105 °C.

Bacterial endotoxins (*2.6.14*): less than 10 IU/mg, if intended for use without a further appropriate procedure for the removal of bacterial endotoxins.

ASSAY

Liquid chromatography (*2.2.29*) as described in the test for related substances with the following modification.

Injection: test solution and reference solution (a).

Calculate the percentage content of $C_{16}H_{22}I_2N_6O_4S$ from the declared content of *iobenguane sulfate CRS*.

STORAGE

Protected from light, at a temperature below 25 °C.

LABELLING

The label recommends testing the substance in a production test before its use for the manufacture of radiopharmaceutical preparations. This ensures that, under specified production conditions, the substance yields the radiopharmaceutical preparation in the desired quantity and quality specified.

IMPURITIES

Specified impurities: A.

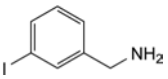

A. 1-(3-iodophenyl)methanamine.

01/2008:0939
corrected 7.0

IODOMETHYLNORCHOLESTEROL (^{131}I) INJECTION

Iodomethylnorcholesteroli (^{131}I) solutio iniectabilis

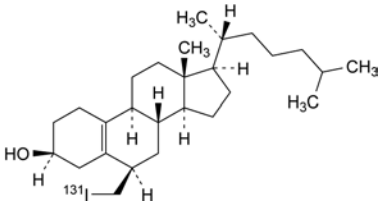

DEFINITION

Sterile solution of 6β-[^{131}I]iodomethyl-19-norcholest-5(10)-en-3β-ol. It may contain a suitable emulsifier such as polysorbate 80 and a suitable antimicrobial preservative such as benzyl alcohol.

Iodine-131: 90 per cent to 110 per cent of the declared iodine-131 radioactivity at the date and time stated on the label.

Specific radioactivity: 3.7 GBq to 37 GBq per gram of 6β-iodomethylnorcholesterol.

CHARACTERS

Appearance: clear or slightly turbid, colourless or pale yellow solution.

Radiopharmaceutical preparations

Half-life and nature of radiation of iodine-131: see general chapter *5.7. Table of physical characteristics of radionuclides*.

IDENTIFICATION

A. Gamma-ray spectrometry.

Result: the most prominent photon of iodine-131 has an energy of 0.365 MeV.

B. Examine the chromatogram obtained in the test for radiochemical purity 6β-[^{131}I]iodomethyl-19-norcholest-5(10)-en-3β-ol (see Tests).

Result: the retardation factor of the principal peak in the radiochromatogram obtained with the test solution is about 0.5.

TESTS

pH (*2.2.3*): 3.5 to 8.5.

Sterility. It complies with the test for sterility prescribed in the monograph *Radiopharmaceutical preparations (0125)*. The preparation may be released for use before completion of the test.

Bacterial endotoxins (*2.6.14*): less than 175/*V* IU/mL, *V* being the maximum recommended dose in millilitres.

RADIONUCLIDIC PURITY

Iodine-131: minimum 99.9 per cent of the total radioactivity.

Gamma-ray spectrometry.

Determine the relative amounts of iodine-131, iodine-133, iodine-135 and other radionuclidic impurities present.

RADIOCHEMICAL PURITY

6β-[^{131}I]Iodomethyl-19-norcholest-5(10)-en-3β-ol. Thin-layer chromatography (*2.2.27*).

Test solution. The preparation to be examined.

Carrier solution. Dissolve 10 mg of *potassium iodide R*, 20 mg of *potassium iodate R* and 0.1 g of *sodium hydrogen carbonate R* in *distilled water R* and dilute to 10 mL with the same solvent.

Plate: *TLC silica gel GF$_{254}$ plate R*.

Mobile phase: *chloroform R*.

Application: up to 5 µL of the test solution and 10 µL of the carrier solution on the same spot.

Development: over a path of 15 cm in about 60 min.

Drying: in air.

Detection: ultraviolet light at 254 nm and suitable detector to determine the distribution of radioactivity.

Retardation factor: 6β-[^{131}I]iodomethyl-19-norcholest-5(10)-en-3β-ol = about 0.5.

Identification of spots: impurity C remains near the point of application.

Limit:

– *6β-[^{131}I]iodomethyl-19-norcholest-5(10)-en-3β-ol*: minimum 85 per cent of the total radioactivity due to iodine-131.

Impurity C. Thin-layer chromatography (*2.2.27*).

Test solution. The preparation to be examined.

Carrier solution. Dissolve 10 mg of *potassium iodide R*, 20 mg of *potassium iodate R* and 0.1 g of *sodium hydrogen carbonate R* in *distilled water R* and dilute to 10 mL with the same solvent.

Plate: *TLC silica gel GF$_{254}$ plate R*.

Mobile phase: *chloroform R*, *anhydrous ethanol R* (50:50 *V*/*V*).

Application: 10 µL of the carrier solution and then up to 5 µL of the test solution on the same spot.

Development: over a path of 15 cm in about 90 min.

Drying: in air.

Detection: ultraviolet light at 254 nm for 5 min and suitable detector to determine the distribution of radioactivity.

Retardation factor: impurity C (yellow spot) = about 0.5.

Identifications of spots: the principal peak of radioactivity is near to the solvent front; other iodocholesterols migrate near the solvent front.

Limit:

– *impurity C*: maximum 5 per cent of the total radioactivity.

RADIOACTIVITY

Determine the radioactivity using a calibrated instrument.

STORAGE

Protected from light, at – 18 °C or below.

IMPURITIES

A. iodine-133,

B. iodine-135,

C. [^{131}I]iodide.

01/2008:1533

KRYPTON (^{81m}Kr) INHALATION GAS

Kryptonum (^{81m}Kr) ad inhalationem

DEFINITION

Gaseous mixture of krypton-81m and a suitable vehicle such as air.

PRODUCTION

Krypton-81m is formed by decay of its parent radionuclide rubidium-81. Rubidium-81 has a half-life of 4.58 h.

The krypton-81m formed is separated from the rubidium-81 with a flow of a suitable gas in a rubidium/krypton generator. Rubidium-81 is produced by proton irradiation of krypton isotopes or by helium-3 or helium-4 irradiation of bromine. After separation of rubidium-81 from the target, it is retained by a suitable support.

Krypton-81m is eluted at a suitable flow rate with a vehicle such as air. The level of moisture required in the eluent depends on the type of generator used. The transport tube for administration has a defined length and inner diameter. The radioactivity concentration is determined before administration.

CHARACTERS

Appearance: clear, colourless gas.

Half-life and nature of radiation of krypton-81m: see general chapter *5.7. Table of physical characteristics of radionuclides*.

IDENTIFICATION

A. Gamma-ray and X-ray spectrometry.

Result: the gamma photon of krypton-81m has an energy of 0.190 MeV.

B. The half-life of krypton-81m is 11.8 s to 14.4 s.

TESTS

RADIONUCLIDIC PURITY

Radionuclides other than krypton-81m: maximum 0.1 per cent of the radioactivity passed through the absorber, calculated with reference to the date and time of administration.

Gamma-ray and X-ray spectrometry.

Elute the generator as prescribed. Pass a sufficient amount (2 L to 10 L) of eluate at a suitable flow rate through a suitable absorber such as water. Determine the amount of radioactivity eluted. Allow the krypton-81m to decay for 5 min and record the gamma and X-ray spectrum of the residual radioactivity on the absorber using a suitable instrument. Examine the gamma-ray and X-ray spectrum of the absorber for the presence of radioactive impurities, which must be identified and quantified.

RADIOACTIVITY

Determine the radioactive concentration of the preparation using suitable equipment such as an ionisation chamber or a gamma ray spectrometer. The radioactivity is measured under defined operating conditions, such as gas flow rate and measurement geometry, that are identical to those used for the calibration of the instrument.

STORAGE

The storage conditions apply to the generator.

LABELLING

The labelling conditions apply to the generator.

07/2009:2350

MEDRONIC ACID FOR RADIOPHARMACEUTICAL PREPARATIONS

Acidum medronicum ad radiopharmaceutica

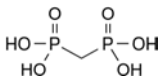

$CH_6O_6P_2$ M_r 176.0
[1984-15-2]

DEFINITION

Methylenediphosphonic acid.

Content: 99.0 per cent to 101.0 per cent (dried substance).

CHARACTERS

Appearance: white or almost white, amorphous or crystalline, hygroscopic powder.

Solubility: very soluble in water, very slightly soluble in anhydrous ethanol, practically insoluble in methylene chloride.

IDENTIFICATION

First identification: A.

Second identification: B.

A. ^{1}H Nuclear magnetic resonance spectrometry (*2.2.33*).

Preparation: 100 g/L solution in *deuterium oxide R*.

Comparison: 100 g/L solution of *medronic acid CRS* in *deuterium oxide R*.

B. Infrared absorption spectrophotometry (*2.2.24*).

Comparison: *medronic acid CRS*.

TESTS

Impurities A and B. ^{1}H Nuclear magnetic resonance spectrometry (*2.2.33*).

Test solution. To 1.0 g of the substance to be examined add 10 mL of *deuterated chloroform R*. Stir for 1 hour. Pass the resulting solution through a sintered-glass filter to remove the precipitate containing medronic acid. Evaporate the filtrate to about 0.5 mL.

Reference solution (a). Mix 10 µL of *medronic acid impurity A CRS* with 1.0 mL of *deuterated chloroform R*.

Reference solution (b). Mix 10 µL of *medronic acid impurity B CRS* with 1.0 mL of *deuterated chloroform R*.

Reference solution (c). After recording the NMR spectrum of the test solution, add 10 µL of *medronic acid impurity A CRS* and 10 µL of *medronic acid impurity B CRS* to the test solution.

Apparatus: NMR spectrometer operating at minimum 250 MHz.

Record the ^{1}H NMR spectra of the test solution and the reference solutions, if necessary using *tetramethylsilane R* as a chemical shift internal reference compound.

Position of the signals: deuterated chloroform = about 7.3 ppm; impurity A = about 4.4 ppm and 1.3 ppm; impurity B = about 4.7 ppm, 2.4 ppm and 1.3 ppm.

System suitability:

- the positions of the signals due to impurities A and B in the spectrum obtained with reference solution (c) do not differ significantly from those in the spectra obtained with reference solutions (a) and (b).

Limits:

- *integration*: integrate the multiplet at 4.4 ppm due to impurity A and the multiplet at 2.4 ppm due to impurity B in the spectra obtained with the test solution and reference solution (c) to obtain the areas of the peaks used in the comparison of impurity contents;
- *impurities A, B*: for each impurity, not more than 0.5 times the area of the corresponding peak in the spectrum obtained with reference solution (c) (1 per cent).

Phosphates (*2.4.11*): maximum 1.0 per cent.

Dissolve 0.100 g in 10 mL of *water R* and dilute to 100.0 mL with the same solvent. Dilute 1.0 mL of this solution to 100.0 mL with *water R*.

Loss on drying (*2.2.32*): maximum 0.5 per cent, determined on 0.500 g by drying in an oven at 105 °C.

Bacterial endotoxins (*2.6.14*): less than 2.0 IU/mg.

ASSAY

Dissolve 75 mg in *water R* and dilute to 50 mL with the same solvent. Titrate with *0.1 M sodium hydroxide*, using 0.1 mL of *bromocresol green solution R* as indicator.

1 mL of *0.1 M sodium hydroxide* is equivalent to 8.80 mg of $CH_6O_6P_2$.

STORAGE

In an airtight container, protected from light.

LABELLING

The label recommends testing the substance in a production test before its use for the manufacture of radiopharmaceutical preparations. This ensures that, under specified production conditions, the substance yields the radiopharmaceutical preparation in the desired quantity and quality specified.

IMPURITIES

Specified impurities: A, B.

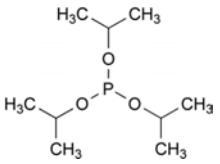

A. tris(1-methylethoxy)phosphane,

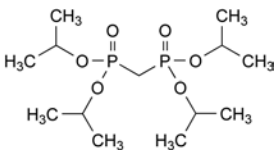

B. tetrakis(1-methylethyl) methylenediphosphonate.

Radiopharmaceutical preparations

01/2008:1617

L-METHIONINE ([11C]METHYL) INJECTION

L-Methionini ([11C]methyl) solutio iniectabilis

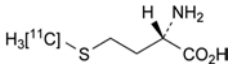

DEFINITION

Sterile solution of (2*S*)-2-amino-4-([11C]methylsulfanyl)-butanoic acid for diagnostic use.

Content: 90 per cent to 110 per cent of the declared carbon-11 radioactivity at the date and time stated on the label.

Purity:

- minimum of 99 per cent of the total radioactivity corresponds to carbon-11,
- minimum of 95 per cent of the total radioactivity corresponds to carbon-11 in the form of L-[*methyl*-11C]methionine and D-[*methyl*-11C]methionine,
- maximum of 10 per cent of the total radioactivity corresponds to carbon-11 in the form of D-[*methyl*-11C]methionine.

Content of methionine: maximum of 2 mg per maximum recommended dose in millilitres.

PRODUCTION

RADIONUCLIDE PRODUCTION

Carbon-11 is a radioactive isotope of carbon which is most commonly produced by proton irradiation of nitrogen. Depending on the addition of either trace amounts of oxygen or small amounts of hydrogen, the radioactivity is obtained as [11C]carbon dioxide or [11C]methane.

RADIOCHEMICAL SYNTHESIS

L-[*Methyl*-11C]methionine can be prepared by various chemical synthetic pathways. All methods rely on the alkylation of the sulfide anion of L-homocysteine with [11C]methyl iodide or [11C]methyl triflate. Variations in the procedures used to generate the sulfide anion of L-homocysteine and methods to obtain [11C]methyl iodide lead to negligible differences with respect to quality in terms of specific radioactivity, enantiomeric purity and possible chemical and radiochemical impurities.

Synthesis of [11C]methyl iodide

[11C]Methyl iodide can be obtained either starting from [11C]carbon dioxide or from [11C]methane. The most frequently used method is the reduction of [11C]carbon dioxide with lithium aluminium hydride. The formed [11C]methanol is reacted with hydroiodic acid. Alternatively [11C]methane, either obtained directly in the target or by on-line processes from [11C]carbon dioxide, is reacted with iodine.

Synthesis of [11C]methyl triflate

[11C]methyl triflate can be prepared from [11C]methyl iodide using a silver triflate-impregnated solid support such as graphitised carbon.

Synthesis of L-[*methyl*-11C]methionine

The most widely used method to obtain L-[*methyl*-11C]-methionine is the alkylation of the sulfide anion, generated from L-homocysteine thiolactone, with [11C]methyl iodide or [11C]methyl triflate in alkaline conditions in a solvent such as acetone. The L-[*methyl*-11C]methionine obtained can be purified by semi-preparative liquid chromatography. For example, a column packed with octadecylsilyl silica gel for chromatography eluted with a 9 g/L solution of sodium chloride is suitable.

L-Homocysteine thiolactone hydrochloride

Specific optical rotation (*2.2.7*): + 20.5 to + 21.5, determined on a 10 g/L solution at 25 °C.

Infrared absorption spectrophotometry (*2.2.24*).

Comparison: *Ph. Eur. reference spectrum of L-homocysteine thiolactone hydrochloride.*

CHARACTERS

Appearance: clear, colourless solution.

Half-life and nature of radiation of carbon-11: see general chapter *5.7. Table of physical characteristics of radionuclides.*

IDENTIFICATION

A. Gamma-ray spectrometry.
   Results: the only gamma photons have an energy of 0.511 MeV and, depending on the measurement geometry, a sum peak of 1.022 MeV may be observed.
B. Radionuclidic purity (see Tests).
C. Examine the chromatograms obtained in the test for radiochemical purity.
   Results: the principal peak in the radiochromatogram obtained with the test solution is similar in retention time to the principal peak in the chromatogram obtained with reference solution (b).

TESTS

pH (*2.2.3*): 4.5 to 8.5.

Sterility. It complies with the test for sterility prescribed in the monograph on *Radiopharmaceutical preparations (0125)*. The injection may be released for use before completion of the test.

Bacterial endotoxins (*2.6.14*): less than 175/*V* IU/mL, *V* being the maximum recommended dose in millilitres. The injection may be released for use before completion of the test.

CHEMICAL PURITY

Impurity A, impurity B and methionine. Liquid chromatography (*2.2.29*).

Test solution. The preparation to be examined.

Reference solution (a). Dissolve 0.6 mg of *L-homocysteine thiolactone hydrochloride R*, 2 mg of *DL-homocysteine R* and 2 mg of *DL-methionine R* in *water R* and dilute to *V*, *V* being the maximum recommended dose in millilitres.

Reference solution (b). Dissolve 2 mg of *L-methionine R* in the same solvent as used in the test solution and dilute to 10 mL with the same solvent.

Column:

- *size*: *l* = 0.25 m, Ø = 4.6 mm,
- *stationary phase*: spherical *octadecylsilyl silica gel for chromatography R* (5 µm) with a specific surface of 220 m^2/g, a pore size of 8 nm and a carbon loading of 6.2 per cent,
- *temperature*: 25 °C.

Mobile phase: 1.4 g/L solution of *potassium dihydrogen phosphate R*.

Flow rate: 1 mL/min.

Detection: spectrophotometer at 225 nm and radioactivity detector connected in series.

Injection: loop injector.

Run time: 10 min.

Relative retention with reference to methionine (retention time = about 2.6 min): impurity B = about 0.8, impurity A = about 2.7.

System suitability: reference solution (a):

- *resolution*: minimum of 2.5 between the peaks due to methionine and impurity B.

Radiopharmaceutical preparations

Limits: examine the chromatogram obtained with the spectrophotometer:

- *impurity A*: not more than the area of the corresponding peak in the chromatogram obtained with reference solution (a) (0.6 mg/*V*),
- *impurity B*: not more than the area of the corresponding peak in the chromatogram obtained with reference solution (a) (2 mg/*V*),
- *methionine*: not more than the area of the corresponding peak in the chromatogram obtained with reference solution (a) (2 mg/*V*).

Residual solvents (*2.4.24*): maximum 50 mg/*V* for the concentration of acetone, *V* being the maximum recommended dose in millilitres. The preparation may be released for use before completion of the test.

RADIONUCLIDIC PURITY

Carbon-11: minimum 99 per cent of the total radioactivity.

A. Gamma-ray spectroscopy.

Comparison: standardised fluorine-18 solution, or by using an instrument calibrated with the aid of such a solution. Standardised fluorine-18 solutions and/or standardisation services are available from the competent authority.

Results: the spectrum obtained with the solution to be examined does not differ significantly from that obtained with a standardised fluorine-18 solution.

B. Half-life: 19.9 min to 20.9 min.

The preparation may be released for use before completion of the test.

RADIOCHEMICAL PURITY

L-[*Methyl*-^{11}C]methionine and impurity E. Liquid chromatography (*2.2.29*) as described in the test for impurity A, impurity B and methionine.

Injection: test solution and reference solution (b).

Limits: examine the chromatogram obtained with the radioactivity detector:

- *total of L-[methyl-^{11}C]methionine and impurity E*: minimum of 95 per cent of the total radioactivity,
- other peaks in the chromatogram may be due to impurity C, impurity D and impurity F.

ENANTIOMERIC PURITY

Impurity E. Thin-layer chromatography (*2.2.27*).

Test solution. The preparation to be examined.

Reference solution (a). Dissolve 2 mg of *L-methionine R* in *water R* and dilute to 10 mL with the same solvent.

Reference solution (b). Dissolve 4 mg of *DL-methionine R* in *water R* and dilute to 10 mL with the same solvent.

Plate: *TLC octadecylsilyl silica gel plate for chiral separations R*.

Mobile phase: *methanol R*, *water R* (50:50 *V/V*).

Application: 2-10 µL.

Development: over a path of 8 cm.

Drying: in air for 5 min.

Detection: spray with a 2 g/L solution of *ninhydrin R* in *ethanol R* and heat at 60 °C for 10 min. Determine the distribution of radioactivity using a suitable detector.

Retardation factors: L-[*methyl*-^{11}C]methionine = about 0.58; impurity E = about 0.51.

System suitability: the chromatogram obtained with reference solution (b) shows 2 clearly separated spots.

Limits:

- *total of L-[methyl-^{11}C]methionine and impurity E*: minimum 95 per cent of the total radioactivity,
- *impurity E*: maximum 10 per cent of the total radioactivity.

The preparation may be released for use before completion of the test.

RADIOACTIVITY

Measure the radioactivity using suitable equipment by comparison with a standardised fluorine-18 solution or by measurement in an instrument calibrated with the aid of such a solution.

LABELLING

The accompanying information specifies the maximum recommended dose in millilitres.

IMPURITIES

A. (3*S*)-3-aminodihydrothiophen-2(3*H*)-one (L-homocysteine thiolactone),

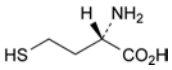

B. (2*S*)-2-amino-4-sulfanylbutanoic acid (L-homocysteine),

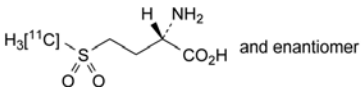

C. (2*RS*)-2-amino-4-([^{11}C]methylsulfonyl)butanoic acid (DL-[*methyl*-^{11}C]methionine *S,S*-dioxide),

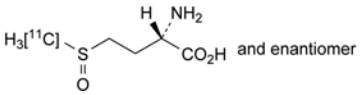

D. (2*RS*)-2-amino-4-([^{11}C]methylsulfinyl)butanoic acid (DL-[*methyl*-^{11}C]methionine *S*-oxide),

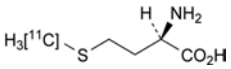

E. (2*R*)-2-amino-4-([^{11}C]methylsulfanyl)butanoic acid (D-[*methyl*-^{11}C]methionine),

F. [^{11}C]methanol

01/2008:1620

OXYGEN (^{15}O)

Oxygenium (^{15}O)

DEFINITION

Mixture of [^{15}O]oxygen in the gaseous phase and a suitable vehicle such as *Medicinal air (1238)*, for diagnostic use.

Purity:

- minimum 99 per cent of the total radioactivity corresponds to oxygen-15,
- minimum 97 per cent of the total radioactivity corresponds to oxygen-15 in the form of oxygen (O_2).

PRODUCTION

RADIONUCLIDIC PRODUCTION

Oxygen-15 is a radioactive isotope of oxygen which may be produced by various nuclear reactions such as proton irradiation of nitrogen-15 or deuteron irradiation of nitrogen-14.

RADIOCHEMICAL SYNTHESIS

In order to recover oxygen-15 as molecular oxygen from the nitrogen target gas, carrier oxygen is added at concentrations generally ranging from 0.2 per cent *V/V* to 1.0 per cent *V/V*. After irradiation, the target gas is usually passed through activated charcoal and a carbon dioxide scavenger, such as soda lime, before mixing with the vehicle.

Radiopharmaceutical preparations

CHARACTERS

Appearance: colourless gas.

Half-life and nature of radiation of oxygen-15: see general chapter *5.7. Table of physical characteristics of radionuclides*.

IDENTIFICATION

A. Gamma spectrometry.

Results: the only gamma photons have an energy of 0.511 MeV and, depending on the measurement geometry, a sum peak of 1.022 MeV may be observed.

B. Radionuclidic purity (see Tests).

C. Examine the chromatograms obtained in the test for radiochemical purity.

Results: the retention times of the principal peaks in the chromatogram obtained with the test gas using the radioactivity detector are similar to those of the principal peaks corresponding to oxygen in the chromatogram obtained with the reference gas using the thermal conductivity detector.

TESTS

The following tests are performed on [^{15}O]oxygen as described under radiochemical synthesis before mixing with the vehicle.

RADIONUCLIDIC PURITY

Oxygen-15: minimum 99 per cent of the total radioactivity.

A. Gamma spectrometry.

Comparison: standardised fluorine-18 solution, or by using an instrument calibrated with the aid of such a solution. Standardised fluorine-18 solutions and/or standardisation services are available from the competent authority.

Results: the spectrum obtained with the solution to be examined does not differ significantly from that obtained with a standardised fluorine-18 solution.

B. Half-life: 1.9 min to 2.2 min.

The preparation may be released for use before completion of the test.

RADIOCHEMICAL PURITY

Oxygen-15 in the form of O_2. Gas chromatography (*2.2.28*): use the normalisation procedure.

Test sample. [^{15}O]oxygen as described under radiochemical synthesis.

Reference gas. Nitrogen gas mixture R.

Column:

- *size*: l = 1.8 m, Ø1 = 6.3 mm and Ø2 = 3.2 mm,
- *stationary phase*: *GC concentrical column R.*

Carrier gas: *helium for chromatography R.*

Flow rate: 65 mL/min.

Temperature:

- *column*: 40 °C,
- *injection port*: 40 °C,
- *thermal conductivity detector*: 70 °C.

Detection: thermal conductivity detector and radioactivity detector connected in series.

Injection: loop injector.

Run time: 10 min.

Retention times: oxygen, nitrogen and carbon monoxide eluting from the inner column = about 0.4 min; carbon dioxide eluting from the inner column = about 0.8 min; oxygen eluting from the outer column = about 2.1 min; nitrogen eluting from the outer column = about 3.1 min; carbon monoxide eluting from the outer column = about 6.2 min.

System suitability: reference gas:

- 5 clearly separated principal peaks are observed in the chromatogram obtained using the thermal conductivity detector,
- *resolution*: minimum of 1.5 between the peaks due to carbon dioxide eluting from the inner column and oxygen eluting from the outer column, in the chromatogram obtained using the thermal conductivity detector.

Limits: examine the chromatogram obtained with the radioactivity detector and calculate the percentage content of oxygen-15 substances from the peak areas.

- *oxygen-15 gas in the form of O_2*: minimum 97 per cent of the total radioactivity,
- disregard the first peak corresponding to components co-eluting from the inner column.

RADIOACTIVITY

The radioactive concentration is determined before administration.

Measure the radioactivity using suitable equipment by comparison with a standardised fluorine-18 solution or by measurement in an instrument calibrated with the aid of such a solution.

01/2009:2353

PENTETATE SODIUM CALCIUM FOR RADIOPHARMACEUTICAL PREPARATIONS

Natrii calcii pentetas ad radiopharmaceutica

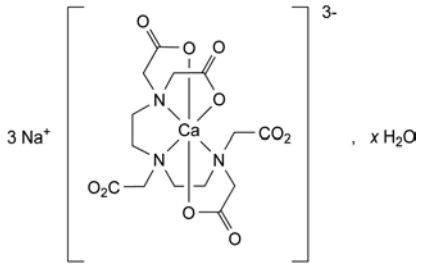

$C_{14}H_{18}CaN_3Na_3O_{10},xH_2O$ M_r 497.4 (anhydrous substance)

DEFINITION

Trisodium [1,1′,1″,1‴-[[(carboxylatomethyl)imino]-bis(ethylenenitrilo)]tetraacetato]calciate(3-).

It is a starting material for the preparation of technetium (^{99m}Tc) pentetate injection.

Content: 98.0 per cent to 102.0 per cent (anhydrous substance).

CHARACTERS

Appearance: white or almost white, hygroscopic powder or crystals.

Solubility: freely soluble in water, practically insoluble in ethanol (96 per cent).

IDENTIFICATION

A. Infrared absorption spectrophotometry (*2.2.24*).

Comparison: *pentetate sodium calcium CRS.*

B. Ignite. The residue gives reaction (b) of calcium (*2.3.1*).

C. The substance to be examined gives reaction (a) of sodium (*2.3.1*).

TESTS

Solution S. Dissolve 5.0 g in *carbon dioxide-free water R* and dilute to 25.0 mL with the same solvent.

Appearance of solution. Solution S is clear (*2.2.1*) and colourless (*2.2.2, Method II*).

pH (*2.2.3*): 8.0 to 9.5 for solution S.

Radiopharmaceutical preparations

Impurity A. Liquid chromatography (*2.2.29*). *Carry out the test protected from light.*

Solvent mixture. Dissolve 10 g of *ferric sulfate pentahydrate R* in 20 mL of *0.5 M sulfuric acid* and add 780 mL of *water R*. Adjust to pH 2.0 with *1 M sodium hydroxide* and dilute to 1000 mL with *water R*.

Test solution. Dissolve 0.100 g of the substance to be examined in the solvent mixture and dilute to 25.0 mL with the solvent mixture.

Reference solution (a). Dissolve 0.100 g of *sodium calcium edetate R* in the solvent mixture and dilute to 25.0 mL with the solvent mixture.

Reference solution (b). Dissolve 40.0 mg of *nitrilotriacetic acid R* (impurity A) in the solvent mixture and dilute to 100.0 mL with the solvent mixture. To 10.0 mL of the solution add 1 mL of reference solution (a) and dilute to 100.0 mL with the solvent mixture. Dilute 1.0 mL of this solution to 10.0 mL with the solvent mixture.

Column:
- *size*: *l* = 0.10 m, Ø = 4.6 mm;
- *stationary phase*: spherical *graphitised carbon for chromatography R1* (5 µm) with a specific surface area of 120 m^2/g and a pore size of 25 nm.

Mobile phase: dissolve 50 mg of *ferric sulfate pentahydrate R* in 50 mL of *0.5 M sulfuric acid* and add 750 mL of *water R*; adjust to pH 1.5 with *0.5 M sulfuric acid* or *1 M sodium hydroxide*, add 20 mL of *ethylene glycol R* and dilute to 1000 mL with *water R*.

Flow rate: 1 mL/min.

Detection: spectrophotometer at 273 nm.

Injection: 20 µL of the test solution and reference solution (b); filter the solutions and inject immediately.

Run time: 4 times the retention time of the iron complex of impurity A.

Retention time: iron complex of impurity A = about 5 min; iron complex of edetic acid = about 10 min; the iron complex of pentetic acid elutes with the void volume.

System suitability: reference solution (b):
- *resolution*: minimum 7 between the peaks due to the iron complex of impurity A and the iron complex of edetic acid;
- *signal-to-noise ratio*: minimum 50 for the peak due to the iron complex of impurity A.

Limit:
- *impurity A*: not more than the area of the corresponding peak in the chromatogram obtained with reference solution (b) (0.1 per cent).

Impurity B: maximum 1.0 per cent.

Dissolve 5.0 g of the substance to be examined in 250 mL of *water R*. Add 10 mL of *ammonium chloride buffer solution pH 10.0 R* and 50 mg of *mordant black 11 triturate R*. Not more than 1.3 mL of *0.1 M magnesium chloride* is required to change the colour of the indicator to violet.

Chlorides: maximum 0.1 per cent.

Dissolve 0.7 g in *water R* and dilute to 20 mL with the same solvent. Add 30 mL of *dilute nitric acid R*, allow to stand for 30 min and filter. Dilute 10 mL of the filtrate to 50 mL with *water R*. Use this solution as the test solution. Prepare the reference solution using 0.40 mL of *0.01 M hydrochloric acid*, add 6 mL of *dilute nitric acid R* and dilute to 50 mL with *water R*. Filter both solutions if necessary. Add 1 mL of *silver nitrate solution R2* to the test solution and the reference solution. Mix and allow to stand for 5 min protected from light. Any opalescence in the test solution is not more intense than that in the reference solution.

Iron (*2.4.9*): maximum 20 ppm.

Dilute 2.5 mL of solution S to 10 mL with *water R*. Add 0.25 g of *calcium chloride R* to the test solution and the standard before the addition of the *thioglycollic acid R*.

Heavy metals (*2.4.8*): maximum 20 ppm.

1.0 g complies with test F. For the digestion replace *sulfuric acid R* by *nitric acid R*. Prepare the reference solution using 2 mL of *lead standard solution (10 ppm Pb) R*.

Water (*2.5.12*): maximum 15.0 per cent, determined on 0.100 g.

Bacterial endotoxins (*2.6.14*): less than 0.1 IU/mg, if intended for use in the manufacture of parenteral preparations without a further appropriate procedure for the removal of bacterial endotoxins.

ASSAY

Dissolve 0.100 g in *water R* and dilute to 50.0 mL with the same solvent. To 25.0 mL of this solution add 80 mL of *water R* and adjust to pH 2.3 with *dilute nitric acid R*. Titrate with *0.01 M bismuth nitrate* using 0.1 mL of a 1 g/L solution of *xylenol orange R* as indicator. The colour of the solution changes from yellow to red.

1 mL of *0.01 M bismuth nitrate* is equivalent to 4.974 mg of $C_{14}H_{18}CaN_3Na_3O_{10}$.

STORAGE

In an airtight container, protected from light.

LABELLING

The label recommends testing the substance in a production test before its use for the manufacture of radiopharmaceutical preparations. This ensures that, under specified production conditions, the substance yields the radiopharmaceutical preparation in the desired quantity and of the quality specified.

IMPURITIES

Specified impurities: A, B.

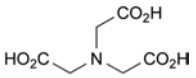

A. nitrilotriacetic acid,

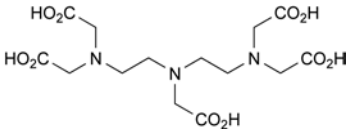

B. [[(carboxymethyl)imino]bis(ethylenenitrilo)]tetraacetic acid (pentetic acid).

01/2008:1924

RACLOPRIDE ([^{11}C]METHOXY) INJECTION

Raclopridi ([^{11}C]methoxy) solutio iniectabilis

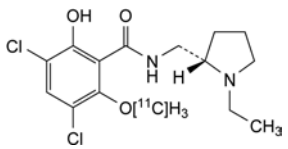

DEFINITION

Sterile solution of 3,5-dichloro-*N*-[[(2*S*)-1-ethylpyrrolidin-2-yl]methyl]-2-hydroxy-6-([^{11}C]methoxy)benzamide.

Content: 90 per cent to 110 per cent of the declared carbon-11 radioactivity at the date and time stated on the label.

Purity:
- minimum of 99 per cent of the total radioactivity corresponds to carbon-11,

Radiopharmaceutical preparations

– minimum of 95 per cent of the total radioactivity corresponds to carbon-11 in the form of [*methoxy*-^{11}C]raclopride.

Content of raclopride: maximum of 10 µg per maximum recommended dose in millilitres.

PRODUCTION

RADIONUCLIDE PRODUCTION

Carbon-11 is a radioactive isotope of carbon most commonly produced by proton irradiation of nitrogen. Depending on the addition of either trace amounts of oxygen or small amounts of hydrogen, the radioactivity is obtained as [^{11}C]carbon dioxide or [^{11}C]methane, respectively.

RADIOCHEMICAL SYNTHESIS

[*Methoxy*-^{11}C]raclopride may be prepared by *O*-alkylation of the corresponding phenolate anion (*S*)-3,5-dichloro-2,6-dihydroxy-*N*-[(1-ethylpyrrolidin-2-yl)methyl]benzamide with iodo[^{11}C]methane or [^{11}C]methyl trifluoromethanesulfonate.

Synthesis of iodo[^{11}C]methane

Iodo[^{11}C]methane may be produced from [^{11}C]carbon dioxide or from [^{11}C]methane. The most frequently used method is reduction of [^{11}C]carbon dioxide with lithium aluminium hydride. The lithium aluminium [^{11}C]methanolate formed is reacted with hydroiodic acid to iodo[^{11}C]methane via [^{11}C]methanol. Alternatively [^{11}C]methane, either obtained directly in the target or by on-line processes from [^{11}C]carbon dioxide, is reacted with iodine.

Synthesis of [^{11}C]methyl trifluoromethanesulfonate

[^{11}C]Methyl trifluoromethanesulfonate may be prepared from iodo[^{11}C]methane using a solid support such as graphitised carbon impregnated with silver trifluoromethanesulfonate.

Synthesis of [*methoxy*-^{11}C]raclopride

Methylation with iodo[^{11}C]methane is performed under alkaline conditions in a solvent such as dimethyl sulfoxide. The methylation with [^{11}C]methyl trifluoromethanesulfonate is performed in a solvent such as dimethylformamide or acetone. The resulting [*methoxy*-^{11}C]raclopride may be purified by semi-preparative liquid chromatography using, for example, a column packed with octadecylsilyl silica gel for chromatography eluted with a mixture of 25 volumes of acetonitrile and 75 volumes of 0.01 M phosphoric acid.

PRECURSOR FOR SYNTHESIS

(*S*)-3,5-Dichloro-2,6-dihydroxy-*N*-[(1-ethylpyrrolidin-2-yl)methyl]benzamide hydrobromide

Melting point (*2.2.14*): 211 °C to 213 °C.

Specific optical rotation (*2.2.7*): + 11.3 to + 11.5, determined on a 15.0 g/L solution in *ethanol R* at 22 °C.

CHARACTERS

Appearance: clear, colourless solution.

Half-life and nature of radiation of carbon-11: see general chapter *5.7. Table of physical characteristics of radionuclides*.

IDENTIFICATION

A. Gamma-ray spectrometry.

Results: the only gamma photons have an energy of 0.511 MeV and, depending on the measurement geometry, a sum peak of 1.022 MeV may be observed.

B. It complies with test B for radionuclidic purity (see Tests).

C. Examine the chromatograms obtained in the test for radiochemical purity.

Results: the principal peak in the radiochromatogram obtained with the test solution is similar in retention time to the principal peak in the chromatogram obtained with reference solution (d).

TESTS

pH (*2.2.3*): 4.5 to 8.5.

Sterility. It complies with the test for sterility prescribed in the monograph on *Radiopharmaceutical preparations (0125)*. The injection may be released for use before completion of the test.

Bacterial endotoxins (*2.6.14*): less than 175/*V* IU/mL, *V* being the maximum recommended dose in millilitres. The injection may be released for use before completion of the test.

CHEMICAL PURITY

Raclopride and impurity A. Liquid chromatography (*2.2.29*).

Test solution. The preparation to be examined.

Reference solution (a). Dissolve 7.2 mg of *raclopride tartrate R* in *water R* and dilute to 50 mL with the same solvent.

Reference solution (b). Dissolve 1.2 mg of *(S)-3,5-dichloro-2,6-dihydroxy-N-[(1-ethylpyrrolidin-2-yl)methyl]benzamide hydrobromide R* in *methanol R* and dilute to 100 mL with the same solvent.

Reference solution (c). To 0.1 mL of reference solution (a) add 0.1 mL of reference solution (b) and dilute to *V* with *water R*, *V* being the maximum recommended dose in millilitres.

Reference solution (d). Dilute 1.0 mL of reference solution (a) to 10.0 mL with *water R*.

Column:

– *size*: *l* = 0.05 m, Ø = 4.6 mm,
– *stationary phase*: spherical *end-capped octadecylsilyl silica gel for chromatography R* (3.5 µm) with a specific surface area of 175 m^2/g, a pore size of 12.5 nm, a pore volume of 0.7 cm^3/g and a carbon loading of 15 per cent,
– *temperature*: 30 °C.

Mobile phase: dissolve 2 g of *sodium heptanesulfonate R* in 700 mL of *water R*, adjust to pH 3.9 with *phosphoric acid R* and dilute to 1000 mL with *acetonitrile R*.

Flow rate: 1 mL/min.

Detection: spectrophotometer at 220 nm and radioactivity detector connected in series.

Injection: loop injector; inject the test solution and reference solutions (b) and (c).

Run time: 10 min.

Relative retention with reference to raclopride: impurity A = about 0.46.

System suitability: reference solution (c):

– *resolution*: minimum of 5 between the peaks due to raclopride and to impurity A.

Limits: examine the chromatogram obtained with the spectrophotometer:

– *raclopride*: not more than the area of the corresponding peak in the chromatogram obtained with reference solution (c) (10 µg/*V*),
– *impurity A*: not more than the area of the corresponding peak in the chromatogram obtained with reference solution (c) (1 µg/*V*).

Residual solvents are limited according to the principles defined in the general chapter (*5.4*), using the general method (*2.4.24*). The preparation may be released for use before completion of the test.

RADIONUCLIDIC PURITY

Carbon-11: minimum 99 per cent of the total radioactivity. The preparation may be released for use before completion of the test.

A. Gamma-ray spectrometry.

Comparison: standardised fluorine-18 solution, or by using a calibrated instrument. Standardised fluorine-18 solutions and/or standardisation services are available from the competent authority.

Results: the spectrum obtained with the solution to be examined does not differ significantly from that obtained with a standardised fluorine-18 solution.

B. Half-life. 19.9 min to 20.9 min.

Radiopharmaceutical preparations

RADIOCHEMICAL PURITY

Liquid chromatography (*2.2.29*) as described in the test for raclopride and impurity A with the following modifications.

Injection: test solution and reference solution (d).

Limits: examine the chromatogram obtained with the radioactivity detector:

– [*Methoxy-^{11}C] raclopride*: minimum of 95 per cent of the total radioactivity.

RADIOACTIVITY

Mesure the radioactivity using suitable equipment by comparison with a standardised fluorine-18 solution or by using a calibrated instrument.

LABELLING

The accompanying information specifies the maximum recommended dose in millilitres.

IMPURITIES

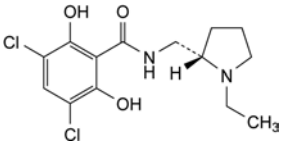

A. 3,5-dichloro-*N*-[[(2*S*)-1-ethylpyrrolidin-2-yl]methyl]-2,6-dihydroxybenzamide.

01/2008:1920

SODIUM ACETATE ([1-^{11}C]) INJECTION

Natrii acetatis ([1-^{11}C]) solutio iniectabilis

$CH_3{}^{11}COONa$

DEFINITION

Sterile solution of sodium [1-^{11}C]acetate, in equilibrium with [1-^{11}C]acetic acid.

Content: 90 per cent to 110 per cent of the declared carbon-11 radioactivity at the date and time stated on the label.

PRODUCTION

RADIONUCLIDE PRODUCTION

Carbon-11 is a radioactive isotope of carbon which is most commonly produced by proton irradiation of nitrogen. By the addition of trace amounts of oxygen, the radioactivity is obtained as [^{11}C]carbon dioxide.

RADIOCHEMICAL SYNTHESIS

[^{11}C]Carbon dioxide may be separated from the target gas mixture by cryogenic trapping or by trapping on a molecular sieve at room temperature. [^{11}C]Carbon dioxide is then released from the trap using an inert gas such as nitrogen at a temperature higher than the trapping temperature. [1-^{11}C]Acetate is usually prepared by reaction of [^{11}C]carbon dioxide with methylmagnesium bromide in organic solvents such as ether or tetrahydrofuran.

Hydrolysis of the product yields [1-^{11}C]acetic acid. It is purified by chromatographic procedures. The eluate is diluted with sodium chloride solution.

PRECURSOR FOR SYNTHESIS

Methylmagnesium bromide. The reactivity of methylmagnesium bromide is tested by decomposition of a defined amount with water. The amount of methane released during this reaction is not less than 90 per cent of the theoretical value.

CHARACTERS

Appearance: clear, colourless solution.

Half-life and nature of radiation of carbon-11: see general chapter *5.7. Table of physical characteristics of radionuclides*.

IDENTIFICATION

A. Gamma-ray spectrometry.

Results: the only gamma photons have an energy of 0.511 MeV and, depending on the measurement geometry, a sum peak of 1.022 MeV may be observed.

B. It complies with test B for radionuclidic purity (see Tests).

C. Examine the chromatograms obtained in the test for radiochemical purity.

Results: the principal peak in the radiochromatogram obtained with the test solution is similar in retention time to the principal peak in the chromatogram obtained with the reference solution.

TESTS

pH (*2.2.3*): 4.5 to 8.5.

Sterility. It complies with the test for sterility prescribed in the monograph on *Radiopharmaceutical preparations (0125)*. The injection may be released for use before completion of the test.

Bacterial endotoxins (*2.6.14*): less than 175/*V* IU/mL, *V* being the maximum recommended dose in millilitres. The injection may be released for use before completion of the test.

CHEMICAL PURITY

Acetate. Liquid chromatography (*2.2.29*).

Test solution. The preparation to be examined.

Reference solution. Dissolve 28 mg of *sodium acetate R* in *water R* and dilute to *V*, *V* being the maximum recommended dose in millilitres.

Column:

– *size*: *l* = 0.25 m, Ø = 4.0 mm;
– *stationary phase*: *strongly basic anion-exchange resin for chromatography R* (10 µm);
– *temperature*: 25 °C.

Mobile phase: *0.1 M sodium hydroxide* protected from atmospheric carbon dioxide.

Flow rate: 1 mL/min.

Detection: spectrophotometer at 220 nm and radioactivity detector connected in series.

Injection: loop injector.

Run time: 10 min.

System suitability: reference solution:

– *resolution*: minimum 4.0 between the peaks due to hold-up volume and acetate.

Limit: examine the chromatograms obtained with the spectrophotometer:

– *acetate*: not more than the area of the corresponding peak in the chromatogram obtained with the reference solution (20 mg per *V*).

Residual solvents are limited according to the principles defined in the general chapter (*5.4*), using the general method (*2.4.24*). The preparation may be released for use before completion of the test.

RADIONUCLIDIC PURITY

Carbon-11: minimum 99 per cent of the total radioactivity.

The preparation may be released for use before completion of the tests.

A. Gamma-ray spectrometry.

Comparison: standardised fluorine-18 solution, or by using a calibrated instrument. Standardised fluorine-18 solutions and/or standardisation services are available from laboratories recognised by the competent authority.

Results: the spectrum obtained with the solution to be examined does not differ significantly from that obtained with a standardised fluorine-18 solution.

Radiopharmaceutical preparations

B. Half-life: 19.9 min to 20.9 min.

RADIOCHEMICAL PURITY

[1-^{11}C]Acetate. Liquid chromatography (*2.2.29*) as described in the test for acetate.

Limit: examine the chromatograms obtained with the spectrophotometer and the radioactivity detector:

– *total of [1-^{11}C]acetate*: minimum 95 per cent of the total radioactivity.

RADIOACTIVITY

Measure the radioactivity using suitable equipment by comparison with a standardised fluorine-18 solution or by measurement with a calibrated instrument.

LABELLING

The accompanying information specifies the maximum recommended dose in millilitres.

01/2008:0279
corrected 7.0

SODIUM CHROMATE (^{51}Cr) STERILE SOLUTION

Natrii chromatis (^{51}Cr) solutio sterilis

DEFINITION

Sterile solution of sodium [^{51}Cr]chromate made isotonic by the addition of sodium chloride.

Chromium-51: 90 per cent to 110 per cent of the declared chromium-51 radioactivity at the date and time stated on the label.

Specific radioactivity: minimum 370 MBq of chromium-51 per milligram of chromate ion.

CHARACTERS

Appearance: clear, colourless or slightly yellow solution.

Half-life and nature of radiation of chromium-51: see general chapter *5.7. Table of physical characteristics of radionuclides*.

IDENTIFICATION

A. Gamma-ray spectrometry.

Result: the only gamma photon of chromium-51 has an energy of 0.320 MeV.

B. Examine the chromatogram obtained in the test for radiochemical purity (see Tests).

Result: the retardation factor of the principal peak in the radiochromatogram obtained with the test solution is about 0.9.

TESTS

pH (*2.2.3*): 6.0 to 8.5.

Total chromate: maximum 2.7 µg of chromate ion (CrO_4^{2-}) per MBq.

Test solution. The preparation to be examined.

Reference solution. 1.7 mg/L solution of *potassium chromate R*.

Measure the absorbance of the solutions (*2.2.25*) at the absorption maximum at 370 nm. If necessary, adjust the test solution and the reference solution to pH 8.0 by adding *sodium hydrogen carbonate solution R*. Calculate the content of chromate in the preparation to be examined using the measured absorbances.

Sterility. It complies with the test for sterility prescribed in the monograph *Radiopharmaceutical preparations (0125)*. The preparation may be released for use before completion of the test.

RADIONUCLIDIC PURITY

Chromium-51. Gamma-ray spectrometry.

Result: the spectrum obtained with the preparation to be examined does not differ significantly from that obtained with a standardised chromium-51 solution.

RADIOCHEMICAL PURITY

[^{51}Cr]Chromate ion. Ascending paper chromatography (*2.2.26*).

Test solution. The preparation to be examined.

Paper: *paper for chromatography R*.

Mobile phase: *ammonia R*, *ethanol (96 per cent) R*, *water R* (25:50:125 *V/V/V*).

Application: a volume of the solution sufficient for the detection method.

Development: immediately, for 2.5 h.

Detection: suitable detector to determine the distribution of the radioactivity.

Retardation factor: impurity A = 0.0 to 0.1; chromate ion = about 0.9.

Limit:

– *[^{51}Cr]chromate ion*: minimum 90 per cent of the total radioactivity due to chromium-51.

RADIOACTIVITY

Determine the radioactivity using a calibrated instrument.

IMPURITIES

A. [^{51}Cr]chromium(III) ion.

01/2008:2100

SODIUM FLUORIDE (^{18}F) INJECTION

Natrii fluoridi (^{18}F) solutio iniectabilis

DEFINITION

Sterile solution containing fluorine-18 in the form of sodium fluoride. It may contain carrier fluoride and a suitable buffer.

Content:

– *fluorine-18*: 90 per cent to 110 per cent of the declared fluorine-18 radioactivity at the date and hour stated on the label,

– *fluoride*: maximum 4.52 mg per maximum recommended dose in millilitres.

PRODUCTION

The radionuclide fluorine-18 is most commonly produced by proton irradiation of water enriched in oxygen-18. Fluorine-18 in the form of fluoride is recovered from the target water, generally by adsorption and desorption from anion-exchange resins or electrochemical deposition and redissolution.

CHARACTERS

Appearance: clear, colourless solution.

Half-life and nature of radiation of fluorine-18: see general chapter *5.7. Table of physical characteristics of radionuclides*.

IDENTIFICATION

A. Gamma-ray spectrometry.

Results: the only gamma photons have an energy of 0.511 MeV and, depending on the measurement geometry, a sum peak of 1.022 MeV may be observed.

B. It complies with test B for radionuclidic purity (see Tests).

C. Examine the chromatograms obtained in the test for radiochemical purity (see Tests).

Radiopharmaceutical preparations

Results: the principal peak in the radiochromatogram obtained with the test solution is similar in retention time to the principal peak in the chromatogram obtained with the reference solution. In the chromatogram obtained with the reference solution, the peak due to fluoride is negative.

TESTS

pH (*2.2.3*): 5.0 to 8.5.

Fluoride. Liquid chromatography (*2.2.29*).

Test solution. The preparation to be examined.

Reference solution. Dissolve 10 mg of *sodium fluoride R* in *water R* and dilute to *V* with the same solvent, *V* being the maximum recommended dose in millilitres.

Column:

- *size*: *l* = 0.25 m, Ø = 4 mm,
- *stationary phase*: *strongly basic anion-exchange resin for chromatography R* (10 µm),
- *temperature*: constant, between 20 °C and 30 °C.

Mobile phase: 4 g/L solution of *sodium hydroxide R*, protected from atmospheric carbon dioxide.

Flow rate: 1 mL/min.

Detection: spectrophotometer at 220 nm and a radioactivity detector connected in series.

Injection: 20 µL.

Run time: 15 min.

System suitability: examine the chromatogram obtained with the reference solution using the spectrophotometer:

- *signal-to-noise ratio*: minimum 10 for the principal peak,
- *retention time of fluoride*: minimum 3 times the hold-up time.

Limit: examine the chromatogram obtained with the spectrophotometer:

- *fluoride*: not more than the area of the corresponding peak in the chromatogram obtained with the reference solution (4.52 mg/*V*).

Sterility. It complies with the test for sterility prescribed in the monograph on *Radiopharmaceutical preparations (0125)*. The injection may be released for use before completion of the test.

Bacterial endotoxins (*2.6.14*): less than 175/*V* IU/mL, *V* being the maximum recommended dose in millilitres. The injection may be released for use before completion of the test.

RADIONUCLIDIC PURITY

Fluorine-18: minimum 99.9 per cent of the total radioactivity.

The preparation may be released for use before completion of the tests.

A. Gamma-ray spectrometry.

Determine the amount of fluorine-18 and radionuclidic impurities with a half-life longer than 2 h. For the detection and quantification of impurities, retain the preparation to be examined for a sufficient time to allow the fluorine-18 to decay to a level which permits the detection of impurities.

Results: the spectrum obtained with the preparation to be examined does not differ significantly from that of a background spectrum.

B. Half-life: 105 min to 115 min.

RADIOCHEMICAL PURITY

[^{18}F]fluoride. Liquid chromatography (*2.2.29*) as described in the test for fluoride. If necessary, dilute the test solution with *water R* to obtain a radioactivity concentration suitable for the radioactivity detector.

Limit: examine the chromatogram obtained with the radioactivity detector:

- *[^{18}F]fluoride*: minimum 98.5 per cent of the total radioactivity.

RADIOACTIVITY

Determine the radioactivity using a calibrated instrument.

LABELLING

The label states the maximum recommended dose in millilitres.

01/2008:0563

SODIUM IODIDE (^{123}I) INJECTION

Natrii iodidi (^{123}I) solutio iniectabilis

DEFINITION

Sterile solution containing iodine-123 in the form of sodium iodide; it may contain sodium thiosulfate or some other suitable reducing agent and a suitable buffer.

Content: 90 per cent to 110 per cent of the declared iodine-123 radioactivity at the date and hour stated on the label.

PRODUCTION

Iodine-123 is obtained by proton irradiation of xenon enriched in xenon-124 (minimum 98 per cent) followed by the decay of xenon-123 which is formed directly and by the decay of caesium-123. No carrier iodide is added.

CHARACTERS

Appearance: clear, colourless solution.

Half-life and nature of radiation of iodine-123: see general chapter *5.7. Table of physical characteristics of radionuclides*.

IDENTIFICATION

A. Gamma-ray spectrometry.

Results: the spectrum obtained with the preparation to be examined does not differ significantly from that of a standardised iodine-123 solution. The most prominent gamma photon has an energy of 0.159 MeV and is accompanied by the principal X-ray of 0.027 MeV.

B. Examine the chromatograms obtained in the test for radiochemical purity.

Results: the principal peak in the radiochromatogram obtained with the test solution is similar in retention time to the principal peak in the chromatogram obtained with reference solution (a).

TESTS

pH (*2.2.3*): 7.0 to 10.0.

Sterility. It complies with the test for sterility prescribed in the monograph on *Radiopharmaceutical preparations (0125)*. The preparation may be released for use before completion of the test.

RADIONUCLIDIC PURITY

Iodine-123: minimum 99.65 per cent of the total radioactivity.

Gamma-ray spectrometry.

Determine the relative amounts of iodine-123, iodine-125, tellurium-121 and other radionuclidic impurities present. For the detection of tellurium-121 and iodine-125, retain the preparation to be examined for a sufficient time to allow iodine-123 to decay to a level which permits the detection of radionuclidic impurities. No radionuclides with a half-life longer than that of iodine-125 are detected.

The preparation may be released for use before completion of the test.

RADIOCHEMICAL PURITY

[^{123}I]Iodide. Liquid chromatography (*2.2.29*).

Test solution. Dilute the preparation to be examined with a 2 g/L solution of *sodium hydroxide R* to a radioactive concentration suitable for the detector. Add an equal volume of a solution containing 1 g/L of *potassium iodide R*, 2 g/L of

Radiopharmaceutical preparations

potassium iodate R and 10 g/L of *sodium hydrogen carbonate R* and mix.

Reference solution (a). Dilute 1 mL of a 26.2 mg/L solution of *potassium iodide R* to 10 mL with *water R*.

Reference solution (b). Dilute 1 mL of a 24.5 mg/L solution of *potassium iodate R* to 10 mL with *water R*. Mix equal volumes of this solution and reference solution (a).

Column:
- *size*: *l* = 0.25 m, Ø = 4.0 mm,
- *stationary phase*: *octadecylsilyl silica gel for chromatography R* (5 µm),
- *temperature*: constant between 20 °C and 30 °C.

Mobile phase: dissolve 5.85 g of *sodium chloride R* in 1000 mL of *water R*, add 0.65 mL of *octylamine R* and adjust to pH 7.0 with *dilute phosphoric acid R*; add 50 mL of *acetonitrile R* and mix.

Flow rate: 1.5 mL/min.

Detection: spectrophotometer at 220 nm and a radioactivity detector connected in series.

Injection: 20 µL.

Run time: 12 min.

Relative retention with reference to iodide (retention time = about 5 min): iodate = 0.2 to 0.3.

System suitability: reference solution (b):
- *resolution*: minimum 2 between the peaks due to iodide and iodate in the chromatogram recorded with the spectrophotometer.

Limit: examine the chromatogram obtained with the test solution using the radioactivity detector and locate the peak due to iodide by comparison with the chromatogram obtained with reference solution (a) using the spectrophotometer:
- *[^{123}I]iodide*: minimum 95 per cent of the total radioactivity.

RADIOACTIVITY

Determine the radioactivity using a calibrated instrument.

LABELLING

The label states the name of any excipient.

IMPURITIES

A. [^{123}I]iodate ion.

01/2008:2314

SODIUM IODIDE (^{123}I) SOLUTION FOR RADIOLABELLING

Natrii iodidi (^{123}I) solutio ad radio-signandum

DEFINITION

Strongly alkaline solution containing iodine-123 in the form of sodium iodide.

Content: 90 per cent to 110 per cent of the declared iodine-123 radioactivity at the date and hour stated on the label.

PRODUCTION

Iodine-123 is obtained by proton irradiation of xenon highly enriched in xenon-124 followed by the decay of directly formed xenon-123 and by the decay of caesium-123. No carrier iodide or reducing agents are added.

CHARACTERS

Appearance: clear, colourless solution.

Half-life and nature of radiation of iodine-123: see general chapter *5.7. Table of physical characteristics of radionuclides*.

IDENTIFICATION

A. Gamma-ray spectrometry.

Results: the most prominent gamma photon of iodine-123 has an energy of 0.159 MeV and is accompanied by the principal X-ray of 0.027 MeV.

B. Examine the chromatograms obtained in the test for radiochemical purity (see Tests).

Results: the principal peak in the radiochromatogram obtained with the test solution is similar in retention time to the principal peak in the chromatogram obtained with reference solution (a).

TESTS

Alkalinity (*2.2.4*). The solution is strongly alkaline.

RADIONUCLIDIC PURITY

Iodine-123: minimum 99.7 per cent of the total radioactivity.

Gamma-ray spectrometry.

Determine the relative amounts of iodine-123, iodine-125, tellurium-121 and other radionuclidic impurities present. For the detection of tellurium-121 and iodine-125, retain the solution to be examined for a sufficient time to allow iodine-123 to decay to a level which permits the detection of radionuclidic impurities. No radionuclides with a half-life longer than that of iodine-125 are detected.

The solution may be released for use before completion of the test.

RADIOCHEMICAL PURITY

[^{123}I]Iodide. Liquid chromatography (*2.2.29*).

Test solution. Dilute the solution to be examined with an equal volume of a solution containing 1 g/L of *potassium iodide R*, 2 g/L of *potassium iodate R* and 10 g/L of *sodium hydrogen carbonate R* and mix. If necessary, first dilute the solution to be examined with a 2 g/L solution of *sodium hydroxide R* to ensure that the final mixture has a radioactivity concentration suitable for the radioactivity detector.

Reference solution (a). Dissolve 10 mg of *potassium iodide R* in *water R* and dilute to 10 mL with the same solvent.

Reference solution (b). Dissolve 20 mg of *potassium iodate R* in *water R* and dilute to 10 mL with the same solvent. Mix equal volumes of this solution and reference solution (a).

Column:
- *size*: *l* = 0.25 m, Ø = 4.0 mm;
- *stationary phase*: *octadecylsilyl silica gel for chromatography R* (5 µm);
- *temperature*: constant, between 20 °C and 30 °C.

Use stainless steel tubing.

Mobile phase: dissolve 5.85 g of *sodium chloride R* in 1000 mL of *water R*, add 0.65 mL of *octylamine R* and adjust to pH 7.0 with *dilute phosphoric acid R*; add 50 mL of *acetonitrile R* and mix.

Flow rate: 1.5 mL/min.

Detection: spectrophotometer at 220 nm and a radioactivity detector connected in series.

Injection: 20 µL.

Run time: 12 min.

Relative retention with reference to iodide (retention time = about 5 min): iodate = 0.2 to 0.3.

System suitability: reference solution (b):
- *resolution*: minimum 2 between the peaks due to iodide and iodate in the chromatogram recorded with the spectrophotometer.

Examine the chromatogram obtained with the test solution using the radioactivity detector and locate the peak due to iodide by comparison with the chromatogram obtained with reference solution (a) using the spectrophotometer.

Limit:
- *[^{123}I]iodide*: minimum 95 per cent of the total radioactivity.

Radiopharmaceutical preparations

RADIOACTIVITY

Determine the radioactivity using a calibrated instrument.

LABELLING

The label states:

- the name of any excipient;
- that the solution is not for direct administration to humans.

IMPURITIES

A. iodine-125,

B. tellurium-121,

C. [^{123}I]iodate ion.

01/2008:0938

SODIUM IODIDE (^{131}I) CAPSULES FOR DIAGNOSTIC USE

Natrii iodidi (^{131}I) capsulae ad usum diagnosticum

DEFINITION

Capsules for diagnostic use containing iodine-131 in the form of sodium iodide on a solid support; they may contain sodium thiosulfate or some other suitable reducing agents and a suitable buffering substance. A package contains 1 or more capsules.

Content:

- iodine-131: maximum 37 MBq per capsule; the average radioactivity determined in the test for uniformity of content is 90 per cent to 110 per cent of the declared iodine-131 radioactivity at the date and hour stated on the label;
- iodide: maximum 20 µg per capsule.

PRODUCTION

Iodine-131 is obtained by neutron irradiation of tellurium or by extraction from uranium fission products. No carrier iodide is added.

CHARACTERS

Half-life and nature of radiation of iodine-131: see general chapter *5.7. Table of physical characteristics of radionuclides*.

IDENTIFICATION

A. Gamma-ray spectrometry.

Results: the spectrum obtained with the preparation to be examined does not differ significantly from that of a standardised iodine-131 solution. The most prominent gamma photon has an energy of 0.365 MeV.

B. Examine the chromatograms obtained in the test for radiochemical purity.

Results: the principal peak in the radiochromatogram obtained with test solution (b) is similar in retention time to the principal peak in the chromatogram obtained with reference solution (a).

TESTS

Disintegration: the contents of the capsule dissolve completely within 15 min.

In a water-bath at 37 °C, warm in a small beaker about 20 mL of a 2.0 g/L solution of *potassium iodide R*. Add a capsule to be examined. Stir magnetically at 20 r/min.

Uniformity of content. Determine the radioactivity of each of not fewer than 10 capsules. Calculate the average radioactivity per capsule. The radioactivity of no capsule differs by more than 10 per cent from the average, the relative standard deviation is not greater than 3.5 per cent.

Iodide. Liquid chromatography (*2.2.29*).

Test solution (a). Dissolve a capsule to be examined in 10 mL of *water R*. Filter through a 0.2 µm filter.

Test solution (b). Dissolve a capsule to be examined in *water R*. Filter through a 0.2 µm filter and dilute the filtrate with a 2 g/L solution of *sodium hydroxide R* to a radioactive concentration suitable for the detector. Add an equal volume of a solution containing 1 g/L of *potassium iodide R*, 2 g/L of *potassium iodate R* and 10 g/L of *sodium hydrogen carbonate R* and mix.

Reference solution (a). Dilute 1 mL of a 26.2 mg/L solution of *potassium iodide R* to 10 mL with *water R*.

Reference solution (b). Dilute 1 mL of a 24.5 mg/L solution of *potassium iodate R* to 10 mL with *water R*. Mix equal volumes of this solution and reference solution (a).

Blank solution. Prepare a solution containing 2 mg/mL of each constituent stated on the label, apart from iodide.

Column:

- *size*: *l* = 0.25 m, Ø = 4.0 mm,
- *stationary phase*: *octadecylsilyl silica gel for chromatography R* (5 µm),
- *temperature*: constant between 20 °C and 30 °C.

Mobile phase: dissolve 5.85 g of *sodium chloride R* in 1000 mL of *water R*, add 0.65 mL of *octylamine R* and adjust to pH 7.0 with *dilute phosphoric acid R*; add 50 mL of *acetonitrile R* and mix.

Flow rate: 1.5 mL/min.

Detection: spectrophotometer at 220 nm and radioactivity detector connected in series.

Injection: 20 µL of test solution (a), reference solutions (a) and (b) and the blank solution.

Run time: 12 min.

Relative retention with reference to iodide (retention time = about 5 min): iodate = 0.2 to 0.3.

System suitability:

- in the chromatogram obtained with the blank solution, none of the peaks has a retention time similar to that of the peak due to iodide,
- *resolution*: minimum 2 between the peaks due to iodide and iodate in the chromatogram obtained with reference solution (b) recorded with the spectrophotometer.

Limit: examine the chromatograms obtained with the spectrophotometer:

- *iodide*: not more than the area of the corresponding peak in the chromatogram obtained with reference solution (a) (20 µg/capsule).

RADIONUCLIDIC PURITY

Iodine-131: minimum 99.9 per cent of the total radioactivity.

Gamma-ray spectrometry.

Determine the relative amounts of iodine-131, iodine-133, iodine-135 and other radionuclidic impurities present.

RADIOCHEMICAL PURITY

[^{131}I]Iodide. Liquid chromatography (*2.2.29*) as described in the test for iodide with the following modifications.

Injection: 20 µL of test solution (b) and reference solution (a).

Limit: examine the chromatogram obtained with the test solution using the radioactivity detector and locate the peak due to iodide by comparison with the chromatogram obtained with reference solution (a) using the spectrophotometer:

- *[^{131}I]iodide*: minimum 95 per cent of the total radioactivity.

RADIOACTIVITY

Determine the radioactivity of the package using a calibrated instrument.

LABELLING

The label states the name of any excipient and the number of capsules in the package.

Radiopharmaceutical preparations

IMPURITIES

A. [^{131}I]iodate ion.

01/2008:2116

SODIUM IODIDE (^{131}I) CAPSULES FOR THERAPEUTIC USE

Natrii iodidi (^{131}I) capsulae ad usum therapeuticum

DEFINITION

Capsules for therapeutic use containing iodine-131 in the form of sodium iodide on a solid support; they contain sodium thiosulfate or some other suitable reducing agents and a suitable buffering substance.

Content:

- iodine-131: 90 per cent to 110 per cent of the declared radioactivity at the date and hour stated on the label,
- iodide: maximum 20 µg per capsule.

PRODUCTION

Iodine-131 is obtained by neutron irradiation of tellurium or by extraction from uranium fission products. No carrier iodide is added.

CHARACTERS

Half-life and nature of radiation of iodine-131: see general chapter *5.7. Table of physical characteristics of radionuclides*.

IDENTIFICATION

A. Gamma-ray spectrometry.

Results: the spectrum obtained with the preparation to be examined does not differ significantly from that of a standardised iodine-131 solution. The most prominent gamma photon of iodine-131 has an energy of 0.365 MeV.

B. Examine the chromatograms obtained in the test for radiochemical purity.

Results: the principal peak in the radiochromatogram obtained with test solution (b) is similar in retention time to the principal peak in the chromatogram obtained with reference solution (a).

TESTS

Disintegration: the contents of the capsule dissolve completely within 15 min.

In a water-bath at 37 °C, warm in a small beaker about 20 mL of a 2.0 g/L solution of *potassium iodide R*. Add a capsule to be examined. Stir magnetically at a rotation rate of 20 r/min.

Iodide. Liquid chromatography (*2.2.29*).

Test solution (a). Dissolve a capsule to be examined in 10 mL of *water R*. Filter through a 0.2 µm filter.

Test solution (b). Dissolve a capsule to be examined in *water R*. Filter through a 0.2 µm filter and dilute the filtrate with an equal volume of a solution containing 1 g/L of *potassium iodide R*, 2 g/L of *potassium iodate R* and 10 g/L of *sodium hydrogen carbonate R*. If necessary, first dilute the filtrate with a 2 g/L solution of *sodium hydroxide R* to ensure that the final mixture has a radioactivity concentration suitable for the radioactivity detector.

Reference solution (a). Dilute 1.0 mL of a 26.2 mg/L solution of *potassium iodide R* to 10.0 mL with *water R*.

Reference solution (b). Dilute 1 mL of a 24.5 mg/L solution of *potassium iodate R* to 10 mL with *water R*. Mix equal volumes of this solution with reference solution (a).

Blank solution. Prepare a solution containing 2 mg/mL of each excipient stated on the label, apart from iodide.

Column:

- *size*: *l* = 0.25 m, Ø = 4.0 mm,
- *stationary phase*: *octadecylsilyl silica gel for chromatography R* (5 µm),
- *temperature*: constant, between 20 °C and 30 °C.

Use stainless steel tubing.

Mobile phase: dissolve 5.85 g of *sodium chloride R* in 1000 mL of *water R*, add 0.65 mL of *octylamine R* and adjust to pH 7.0 with *dilute phosphoric acid R*; add 50 mL of *acetonitrile R* and mix.

Flow rate: 1.5 mL/min.

Detection: spectrophotometer at 220 nm and radioactivity detector connected in series.

Injection: 20 µL of test solution (a), reference solutions (a) and (b) and the blank solution.

Run time: 12 min.

Relative retention with reference to iodide (retention time = about 5 min): iodate = 0.2 to 0.3.

System suitability:

- in the chromatogram obtained with the blank solution, none of the peaks has a retention time similar to that of the peak due to iodide;
- *resolution*: minimum 2 between the peaks due to iodide and iodate in the chromatogram obtained with reference solution (b) using the spectrophotometer.

Limits: examine the chromatograms obtained with the spectrophotometer; locate the peak due to iodide by comparison with the chromatogram obtained with reference solution (a):

- *iodide*: not more than the area of the corresponding peak in the chromatogram obtained with reference solution (a) (20 µg/capsule).

RADIONUCLIDIC PURITY

Iodine-131: minimum 99.9 per cent of the total radioactivity.

Gamma-ray spectrometry.

Determine the relative amounts of iodine-130, iodine-131, iodine-133, iodine-135 and other radionuclidic impurities present.

RADIOCHEMICAL PURITY

[^{131}I]Iodide. Liquid chromatography (*2.2.29*) as described in the test for iodide with the following modifications.

Injection: 20 µL of test solution (b) and reference solution (a).

Limits: examine the chromatogram obtained with test solution (b) using the radioactivity detector and locate the peak due to iodide by comparison with the chromatogram obtained with reference solution (a) using the spectrophotometer:

- *[^{131}I]iodide*: minimum 95 per cent of the total radioactivity.

RADIOACTIVITY

Determine the radioactivity of each capsule using a calibrated instrument.

LABELLING

The label states the name of any excipient.

IMPURITIES

A. [^{131}I]iodate ion,

B. iodine-130,

C. iodine-133,

D. iodine-135.

Radiopharmaceutical preparations

01/2008:0281

SODIUM IODIDE (^{131}I) SOLUTION

Natrii iodidi (^{131}I) solutio

DEFINITION

Solution containing iodine-131 in the form of sodium iodide and also sodium thiosulfate or some other suitable reducing agent. It may contain a suitable buffer.

Content:

- *iodine-131*: 90 per cent to 110 per cent of the declared radioactivity at the date and hour stated on the label,
- *iodide*: maximum 20 µg in the maximum recommended dose in millilitres.

PRODUCTION

Iodine-131 is a radioactive isotope of iodine and may be obtained by neutron irradiation of tellurium or by extraction from uranium fission products. No carrier iodide is added.

CHARACTERS

Appearance: clear, colourless solution.

Half-life and nature of radiation of iodine-131: see general chapter *5.7. Table of physical characteristics of radionuclides*.

IDENTIFICATION

A. Gamma-ray spectrometry.

Results: the spectrum obtained with the preparation to be examined does not differ significantly from that of a standardised iodine-131 solution. The most prominent gamma photon has an energy of 0.365 MeV.

B. Examine the chromatograms obtained in the test for iodide.

Results: the principal peak in the radiochromatogram obtained with test solution (a) is similar in retention time to the principal peak in the chromatogram obtained with reference solution (a).

TESTS

pH (*2.2.3*): 7.0 to 10.0.

Sterility. If intended for parenteral administration, it complies with the test for sterility prescribed in the monograph on *Radiopharmaceutical preparations (0125)*. The solution may be released for use before completion of the test.

Iodide. Liquid chromatography (*2.2.29*).

Test solution (a). The preparation to be examined.

Test solution (b). Dilute the preparation to be examined with *0.05 M sodium hydroxide* until the radioactivity is equivalent to about 74 MBq/mL. Add an equal volume of a solution containing 1 g/L of *potassium iodide R*, 2 g/L of *potassium iodate R* and 10 g/L of *sodium hydrogen carbonate R* and mix.

Reference solution (a). Dilute 1 mL of a 26.2 mg/L solution of *potassium iodide R* to *V* with *water R*, *V* being the maximum recommended dose in millilitres.

Reference solution (b). Dilute 1 mL of a 24.5 mg/L solution of *potassium iodate R* to *V* with *water R*, *V* being the maximum recommended dose in millilitres. Mix equal volumes of this solution and of reference solution (a).

Blank solution. Prepare a solution containing 2 mg/mL of each of the components stated on the label, apart from iodide.

Column:

- *size*: *l* = 0.25 m, Ø = 4.0 mm,
- *stationary phase*: *octadecylsilyl silica gel for chromatography R* (5 µm),
- *temperature*: maintain at a constant temperature between 20 °C and 30 °C.

Use stainless steel tubing.

Mobile phase: dissolve 5.844 g of *sodium chloride R* in 1000 mL of *water R*, add 650 µL of *octylamine R* and adjust to pH 7.0 with *phosphoric acid R*; add 50 mL of *acetonitrile R* and mix.

Flow rate: 1.5 mL/min.

Detection: spectrophotometer at 220 nm and radioactivity detector connected in series.

Injection: 25 µL; inject test solution (a), the blank solution and reference solutions (a) and (b).

Run time: 12 min.

Relative retention with reference to iodide (retention time = about 5 min): iodate = 0.2 to 0.3.

System suitability:

- in the chromatogram obtained with the blank solution, none of the peaks shows a retention time similar to that of the peak due to iodide,
- *resolution*: minimum 2 between the peaks due to iodide and iodate in the chromatogram obtained with reference solution (b) recorded with the spectrophotometer.

Limit: examine the chromatogram obtained with the spectrophotometer; locate the peak due to iodide by comparison with the chromatogram obtained with reference solution (a):

- *iodide*: not more than the area of the corresponding peak in the chromatogram obtained with reference solution (a).

RADIONUCLIDIC PURITY

Iodine-131: minimum 99.9 per cent of the total radioactivity.

Gamma-ray spectrometry.

Determine the relative amounts of iodine-131, iodine-133, iodine-135 and other radionuclidic impurities present.

RADIOCHEMICAL PURITY

[^{131}I]Iodide. Liquid chromatography (*2.2.29*) as described in the test for iodide with the following modification.

Injection: test solution (b).

Limit: examine the chromatogram obtained with the radioactivity detector:

- *[^{131}I]iodide*: minimum 95 per cent of the total radioactivity.

RADIOACTIVITY

Measure the radioactivity using suitable equipment by comparison with a standardised iodine-131 solution or by using a calibrated instrument.

LABELLING

The label states:

- the name of any excipient,
- the maximum recommended dose, in millilitres,
- where applicable, that the preparation is suitable for use in the manufacture of parenteral preparations.

IMPURITIES

A. [^{131}I]iodate ion.

01/2008:2121

SODIUM IODIDE (^{131}I) SOLUTION FOR RADIOLABELLING

Natrii iodidi (^{131}I) solutio ad radio-signandum

DEFINITION

Strongly alkaline solution containing iodine-131 in the form of sodium iodide. It does not contain a reducing agent.

Content: 90 per cent to 110 per cent of the declared iodine-131 radioactivity at the date and hour stated on the label.

Radiopharmaceutical preparations

PRODUCTION

Iodine-131 may be obtained by neutron irradiation of tellurium or by extraction from uranium fission products. No carrier iodide is added.

CHARACTERS

Appearance: clear, colourless solution.

Half-life and nature of radiation of iodine-131: see general chapter *5.7. Table of physical characteristics of radionuclides*.

IDENTIFICATION

A. Gamma-ray spectrometry.

Results: the spectrum obtained with the preparation to be examined does not differ significantly from that of a standardised iodine-131 solution. The most prominent gamma photon of iodine-131 has an energy of 0.365 MeV.

B. Examine the chromatograms obtained in the test for radiochemical purity (see Tests).

Results: the principal peak in the radiochromatogram obtained with the test solution is similar in retention time to the principal peak in the chromatogram obtained with reference solution (a).

TESTS

Alkalinity (*2.2.4*). The preparation is strongly alkaline.

RADIONUCLIDIC PURITY

Iodine-131: minimum 99.9 per cent of the total radioactivity.

Gamma-ray spectrometry.

Determine the relative amounts of iodine-130, iodine-131, iodine-133, iodine-135 and other radionuclidic impurities present.

RADIOCHEMICAL PURITY

[^{131}I]Iodide. Liquid chromatography (*2.2.29*).

Test solution. Dilute the preparation to be examined with an equal volume of a solution containing 1 g/L of *potassium iodide R*, 2 g/L of *potassium iodate R* and 10 g/L of *sodium hydrogen carbonate R* and mix. If necessary, first dilute the preparation to be examined with a 2 g/L solution of *sodium hydroxide R* to ensure that the final mixture has a radioactivity concentration suitable for the radioactivity detector.

Reference solution (a). Dissolve 10 mg of *potassium iodide R* in *water R* and dilute to 10 mL with the same solvent.

Reference solution (b). Dissolve 20 mg of *potassium iodate R* in *water R* and dilute to 10 mL with the same solvent. Mix equal volumes of this solution and reference solution (a).

Column:

- *size*: *l* = 0.25 m, Ø = 4.0 mm,
- *stationary phase*: *octadecylsilyl silica gel for chromatography R* (5 µm),
- *temperature*: constant, between 20 °C and 30 °C.

Use stainless steel tubing.

Mobile phase: dissolve 5.85 g of *sodium chloride R* in 1000 mL of *water R*, add 0.65 mL of *octylamine R* and adjust to pH 7.0 with *dilute phosphoric acid R*; add 50 mL of *acetonitrile R* and mix.

Flow rate: 1.5 mL/min.

Detection: spectrophotometer at 220 nm and a radioactivity detector connected in series.

Injection: 20 µL.

Run time: 12 min.

Relative retention with reference to iodide (retention time = about 5 min): iodate = 0.2 to 0.3.

System suitability: reference solution (b):

- *resolution*: minimum 2 between the peaks due to iodide and iodate in the chromatogram recorded with the spectrophotometer.

Limit: examine the chromatogram obtained with the radioactivity detector:

- *[^{131}I]iodide*: minimum 95 per cent of the total radioactivity.

RADIOACTIVITY

Determine the radioactivity using a calibrated instrument.

LABELLING

The label states:

- the method of production of iodine-131,
- the name of any excipient,
- that the preparation is not for direct human use.

IMPURITIES

A. [^{131}I]iodate ion.

07/2012:2352

SODIUM IODOHIPPURATE DIHYDRATE FOR RADIOPHARMACEUTICAL PREPARATIONS

Natrii iodohippuras dihydricus ad radiopharmaceutica

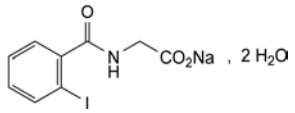

$C_9H_7INNaO_3,2H_2O$ M_r 363.1
[5990-94-3]

DEFINITION

Sodium (2-iodobenzamido)acetate dihydrate.

Content: 99.0 per cent to 101.0 per cent (anhydrous substance).

CHARACTERS

Appearance: white or almost white, crystalline powder.

Solubility: soluble in water and in ethanol (96 per cent), practically insoluble in methylene chloride.

IDENTIFICATION

A. Infrared absorption spectrophotometry (*2.2.24*).

Comparison: *sodium iodohippurate CRS*.

B. It gives reaction (b) of sodium (*2.3.1*).

TESTS

Related substances. Liquid chromatography (*2.2.29*).

Test solution. Dissolve 0.100 g of the substance to be examined in the mobile phase and dilute to 10.0 mL with the mobile phase.

Reference solution (a). Dilute 1.0 mL of the test solution to 100.0 mL with the mobile phase. Dilute 1.0 mL of this solution to 10.0 mL with the mobile phase.

Reference solution (b). Dissolve 10 mg of *2-iodobenzoic acid R* (impurity A) in *methanol R* and dilute to 100.0 mL with the same solvent.

Reference solution (c). Dissolve 10 mg of *benzoic acid R* in the mobile phase, add 1 mL of the test solution and dilute to 100 mL with the mobile phase.

Column:

- *size*: *l* = 0.25 m, Ø = 4.6 mm;
- *stationary phase*: *end-capped polar-embedded octadecylsilyl amorphous organosilica polymer R* (5 µm).

Mobile phase: *acetic acid R*, *methanol R*, *water R* (1:50:50 *V/V/V*).

Radiopharmaceutical preparations

Flow rate: 1 mL/min.

Detection: spectrophotometer at 230 nm.

Injection: 20 µL.

Run time: 7 times the retention time of 2-iodohippuric acid.

Identification of impurities: use the chromatogram obtained with reference solution (b) to identify the peak due to impurity A.

Relative retention with reference to 2-iodohippuric acid (retention time = about 4.5 min): benzoic acid = about 1.6; impurity A = about 2.1.

System suitability: reference solution (c):

- *resolution*: minimum 5.0 between the peaks due to 2-iodohippuric acid and benzoic acid.

Limits:

- *impurity A*: not more than 5 times the area of the principal peak in the chromatogram obtained with reference solution (a) (0.5 per cent);
- *unspecified impurities*: for each impurity, not more than the area of the principal peak in the chromatogram obtained with reference solution (a) (0.10 per cent);
- *total*: not more than 5 times the area of the principal peak in the chromatogram obtained with reference solution (a) (0.5 per cent);
- *disregard limit*: 0.5 times the area of the principal peak in the chromatogram obtained with reference solution (a) (0.05 per cent).

Water (*2.5.12*): 8.0 per cent to 12.0 per cent, determined on 0.100 g.

Bacterial endotoxins (*2.6.14*): less than 2 IU/mg, if intended for use in the manufacture of parenteral preparations without a further appropriate procedure for the removal of bacterial endotoxins.

ASSAY

Dissolve 0.250 g in 20 mL of *glacial acetic acid R*. Titrate with *0.1 M perchloric acid*, determining the end-point potentiometrically (*2.2.20*).

1 mL of *0.1 M perchloric acid* is equivalent to 32.71 mg of $C_9H_7INNaO_3$.

STORAGE

Protected from light.

LABELLING

The label recommends testing the substance in a production test before its use for the manufacture of radiopharmaceutical preparations. This ensures that, under specified production conditions, the substance yields the radiopharmaceutical preparation in the desired quantity and of the quality specified.

IMPURITIES

Specified impurities: *A*.

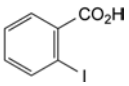

A. 2-iodobenzoic acid.

01/2008:0564
corrected 7.0

SODIUM IODOHIPPURATE (^{123}I) INJECTION

Natrii iodohippurati (^{123}I) solutio iniectabilis

DEFINITION

Sterile solution of sodium (2-[^{123}I]iodobenzamido)acetate. It may contain a suitable buffer and a suitable antimicrobial preservative such as benzyl alcohol.

Iodine-123: 90 per cent to 110 per cent of the declared iodine-123 radioactivity at the date and time stated on the label.

Specific radioactivity: 0.74 GBq to 10.0 GBq of iodine-123 per gram of sodium 2-iodohippurate.

CHARACTERS

Appearance: clear, colourless solution.

Half-life and nature of radiation of iodine-123: see general chapter *5.7. Table of physical characteristics of radionuclides*.

IDENTIFICATION

A. Gamma-ray and X-ray spectrometry.

Results: the most prominent gamma photon has an energy of 0.159 MeV and is accompanied by an X-ray of 0.027 MeV.

B. Examine the chromatograms obtained in the test for radiochemical purity (see Tests).

Result: the principal spot in the radiochromatogram obtained with the test solution is similar in retardation factor to the spot corresponding to 2-iodohippuric acid in the chromatogram obtained with the reference solution.

TESTS

pH (*2.2.3*): 3.5 to 8.5.

Sterility. It complies with the test for sterility prescribed in the monograph *Radiopharmaceutical preparations (0125)*. The preparation may be released for use before completion of the test.

RADIONUCLIDIC PURITY

The preparation may be released for use before completion of the test.

Radionuclides other than iodine-123: maximum 0.35 per cent of the total radioactivity.

Gamma-ray and X-ray spectrometry.

Determine the relative amounts of iodine-125, tellurium-121 and other radionuclidic impurities present. For their detection, retain the preparation to be examined for a sufficient time to allow iodine-123 to decay to a level which permits the detection of radionuclidic impurities. Record the gamma-ray spectrum and X-ray spectrum of the decayed material. No radionuclides with a half-life longer than that of iodine-125 are detected.

RADIOCHEMICAL PURITY

2-[^{123}I]Iodohippuric acid. Thin-layer chromatography (*2.2.27*).

Test solution. Dissolve 1 g of *potassium iodide R* in 10 mL of *water R*, add 1 volume of this solution to 10 volumes of the preparation to be examined and use within 10 min of mixing. If necessary, dilute with the reference solution (carrier) to give a radioactive concentration sufficient for the detection method, for example 3.7 MBq per millilitre.

Reference solution (*carrier*). Dissolve 40 mg of *2-iodobenzoic acid R* and 40 mg of *2-iodohippuric acid R* in 4 mL of a 4 g/L solution of *sodium hydroxide R*, add 10 mg of *potassium iodide R* and dilute to 10 mL with *water R*.

Plate: *TLC silica gel GF_{254} plate R*.

Radiopharmaceutical preparations

Mobile phase: *water R*, *glacial acetic acid R*, *butanol R*, *toluene R* (1:4:20:80 *V/V/V/V*).

Application: 10 µL.

Development: over a path of 12 cm in about 75 min.

Drying: in air.

Detection: examine in ultraviolet light at 254 nm and determine the distribution of radioactivity using a suitable detector.

Identification of spots: the chromatogram obtained with the reference solution shows a spot corresponding to 2-iodohippuric acid and nearer to the solvent front a spot corresponding to impurity D; impurity C remains near the point of application.

Limits:

- *2-[^{123}I]iodohippuric acid*: minimum 96 per cent of the total radioactivity due to iodine-123;
- *impurity C*: maximum 2 per cent of the total radioactivity due to iodine-123;
- *impurity D*: maximum 2 per cent of the total radioactivity due to iodine-123.

RADIOACTIVITY

Determine the radioactivity using a calibrated instrument.

STORAGE

Protected from light.

LABELLING

The label states whether or not the preparation is suitable for renal plasma-flow studies.

IMPURITIES

A. iodine-125,

B. tellurium-121,

C. [^{123}I]iodide,

D. 2-[^{123}I]iodobenzoic acid.

01/2008:0282
corrected 7.0

SODIUM IODOHIPPURATE (^{131}I) INJECTION

Natrii iodohippurati (^{131}I) solutio iniectabilis

DEFINITION

Sterile solution of sodium 2-(2-[^{131}I]iodobenzamido)acetate. It may contain a suitable buffer and a suitable antimicrobial preservative such as benzyl alcohol.

Iodine-131: 90 per cent to 110 per cent of the declared iodine-131 radioactivity at the date and time stated on the label.

Specific radioactivity: 0.74 GBq to 7.4 GBq of iodine-131 per gram of sodium 2-iodohippurate.

CHARACTERS

Appearance: clear, colourless solution.

Half-life and nature of radiation of iodine-131: see general chapter *5.7. Table of physical characteristics of radionuclides*.

IDENTIFICATION

A. Gamma-ray spectrometry.

Result: the most prominent gamma photon of iodine-131 has an energy of 0.365 MeV.

B. Examine the chromatograms obtained in the test for radiochemical purity (see Tests).

Result: the principal peak in the radiochromatogram obtained with the test solution has a similar retardation factor as the spot corresponding to 2-iodohippuric acid in the chromatogram obtained with the reference solution.

TESTS

pH (*2.2.3*): 6.0 to 8.5.

Sterility. It complies with the test for sterility prescribed in the monograph *Radiopharmaceutical preparations (0125)*. The preparation may be released for use before completion of the test.

RADIONUCLIDIC PURITY

Iodine-131: minimum 99.9 per cent of the total radioactivity.

Gamma-ray spectrometry.

Determine the relative amounts of iodine-131, iodine-133, iodine-135 and other radionuclidic impurities present.

RADIOCHEMICAL PURITY

2-[^{131}I]Iodohippuric acid. Thin-layer chromatography (*2.2.27*).

Test solution. Dissolve 1 g of *potassium iodide R* in 10 mL of *water R*, add 1 volume of this solution to 10 volumes of the preparation to be examined and use within 10 min of mixing. If necessary dilute with the reference solution (carrier) to give a radioactive concentration sufficient for the detection method, for example 3.7 MBq/mL.

Reference solution (carrier). Dissolve 40 mg of *2-iodobenzoic acid R* and 40 mg of *2-iodohippuric acid R* in 4 mL of a 4 g/L solution of *sodium hydroxide R*, add 10 mg of *potassium iodide R* and dilute to 10 mL with *water R*.

Plate: *TLC silica gel GF$_{254}$ plate R*.

Mobile phase: *water R*, *glacial acetic acid R*, *butanol R*, *toluene R* (1:4:20:80 *V/V/V/V*).

Application: 10 µL.

Development: over a path of 12 cm in about 75 min.

Drying: in air.

Detection: in ultraviolet light at 254 nm and with a suitable detector to determine the distribution of radioactivity.

Identification of spots: the chromatogram obtained with the reference solution shows a spot corresponding to 2-iodohippuric acid and nearer to the solvent front a spot corresponding to impurity C; impurity D remains near the point of application.

Limits:

- *2-[^{131}I]iodohippuric acid*: minimum 96 per cent of the total radioactivity due to iodine-131;
- *impurity C*: maximum 2 per cent of the total radioactivity due to iodine-131;
- *impurity D*: maximum 2 per cent of the total radioactivity due to iodine-131.

RADIOACTIVITY

Determine the radioactivity using a calibrated instrument.

STORAGE

Protected from light.

LABELLING

The label states that the preparation is not necessarily suitable for renal plasma-flow studies.

IMPURITIES

A. iodine-133,

B. iodine-135,

C. 2-[^{131}I]iodobenzoic acid,

D. [^{131}I]iodide.

01/2008:1923

SODIUM MOLYBDATE (^{99}Mo) SOLUTION (FISSION)

Natrii molybdatis (^{99}Mo) fissione formati solutio

DEFINITION

Alkaline solution of sodium [^{99}Mo]molybdate obtained by extraction of fission products of uranium-235. It may contain stabilisers.

Content: 90 per cent to 110 per cent of the declared molybdenum-99 radioactivity at the date and time stated on the label.

PRODUCTION

Molybdenum-99 is usually produced by fission of uranium enriched in uranium-235, which is caused by the absorption of a thermal neutron, resulting in high-specific-activity molybdenum-99. By the fission of uranium after neutron capture, more than 200 different radionuclides are produced. In approximately 6 per cent of the fissions, molybdenum-99 is formed after decay of a number of short-lived parent radionuclides. After dissolution of the target, the molybdenum-99 is separated from the mixture of nuclides and purified by using chromatographic processes in order to obtain molybdenum-99 with a high level of radionuclidic purity.

CHARACTERS

Appearance: clear, colourless or almost colourless solution.

Half-life and nature of radiation of molybdenum-99: see general chapter *5.7. Table of physical characteristics of radionuclides*.

IDENTIFICATION

A. Gamma-ray spectrometry.

Results: the most prominent gamma photon of molybdenum-99 has an energy of 0.740 MeV; a peak with an energy of 0.141 MeV, due to technetium-99-m is also visible.

B. Examine the chromatograms obtained in the test for radiochemical purity (see Tests).

Results: the principal peak in the radiochromatogram obtained with the test solution has a similar retardation factor to the principal spot in the chromatogram obtained with the reference solution.

TESTS

Solution S. Dilute the preparation to be examined to a radioactivity concentration of approximately 370 MBq/mL with a 2.42 g/L solution of *sodium molybdate R*.

Alkalinity. The preparation is alkaline (*2.2.4*).

RADIONUCLIDIC PURITY

Iodine-131, ruthenium-103 and tellurium-132:

- *iodine-131*: maximum 5×10^{-3} per cent of the total radioactivity;
- *ruthenium-103*: maximum 5×10^{-3} per cent of the total radioactivity;
- *tellurium-132*: maximum 5×10^{-3} per cent of the total radioactivity.

The following method has been found to be suitable; other validated methods, approved by the competent authority, may be used.

Gamma-ray spectrometry.

Condition a column with an internal volume of approximately 1.5 mL of *strongly basic anion-exchange resin R* with a mixture of equal volumes of *glacial acetic acid R* and *water R*. All elutions of the column are made at a flow rate not exceeding 1 mL/min.

Test solution. In a test-tube, successively add, with mixing, 1 mL of a 24.2 g/L solution of *sodium molybdate R*, 0.5 mL of *strong hydrogen peroxide solution R*, 2.5 mL of *glacial acetic acid R*, 1.0 mL of *iodine-123 and ruthenium-106 spiking solution R* and 1.0 mL of solution S. Allow to stand for 30 min at room temperature.

Reference solution. Mix 1.0 mL of *iodine-123 and ruthenium-106 spiking solution R* and 4.0 mL of *water R*.

Apply the test solution to the column and elute. Just before the disappearance of the liquid from the top of the column, add 6 mL of a mixture of equal volumes of *glacial acetic acid R* and *water R* and elute. Transfer 5.0 mL of the combined eluates to a counting tube. Determine the radioactivity of iodine-123, iodine-131, ruthenium-103, ruthenium-106 and iodine-132 at the gamma-ray energies of 0.159 MeV for iodine-123, 0.365 MeV for iodine-131, 0.497 MeV for ruthenium-103, 0.512 MeV for ruthenium-106 and 0.668 MeV for iodine-132. Determine in the same way the radioactivity of iodine-123 and ruthenium-106 in the reference solution and calculate the recovery of iodine-123 and ruthenium-106 in the combined eluates.

Calculate the radioactivity of iodine-131, iodine-132 and ruthenium-103 in the combined eluates, taking into account the recovery, the fraction of eluate used, the counting efficiency and the radioactive decay. From the radioactivity of iodine-132 (daughter radionuclide of tellurium-132), calculate the radioactivity of tellurium-132, taking into account the time of the test and the time of separation of molybdenum-99.

Total radioactivity due to strontium-89 and strontium-90: maximum 6×10^{-5} per cent of the total radioactivity.

The following method has been found to be suitable; other validated methods, approved by the competent authority, may be used.

Liquid scintillation spectrometry.

Connect 2 columns, each with an internal volume of approximately 1.5 mL of *strongly basic anion-exchange resin R*, in series and condition the columns with 10 mL of a 4 g/L solution of *sodium hydroxide R*. All elutions of the columns are made at a flow rate not exceeding 1 mL/min.

Test solution. In a test-tube, successively add, with mixing, 1.0 mL of solution S, 50 µL of *strontium-85 spiking solution R* and 0.05 mL of *strong sodium hypochlorite solution R*. Allow to stand for 10 min at room temperature.

Reference solution. Mix 50 µL of *strontium-85 spiking solution R* with 5.0 mL of a 9.5 g/L solution of *nitric acid R* in a vial for liquid scintillation counting and add 10 mL of *liquid scintillation cocktail R*.

Apply the test solution to the upper of the 2 columns and elute. Just before the disappearance of the liquid from the top of the upper column, add 3 mL of a 4 g/L solution of *sodium hydroxide R* and elute until the columns are dry. Combine the eluates and add 4 mL of a 947 g/L solution of *nitric acid R* (molybdenum-poor eluate). Determine the radioactivity due to molybdenum-99 using gamma-ray spectrometry. If the radioactivity due to molybdenum-99 is higher than 6×10^{-7} per cent of the radioactivity due to molybdenum-99 in 1 mL of solution S, repeat the above procedure using 2 new columns.

Condition a column with an internal volume of approximately 2 mL of *strontium selective extraction resin R* with 5 mL of a 473 g/L solution of *nitric acid R* and dry the column. All elutions of the column are made at a flow rate not exceeding 1 mL/min. Apply to the column the molybdenum-poor eluate and elute. Just before the disappearance of the liquid from the top of the column, add 20 mL of a 473 g/L solution of

nitric acid R and elute until the column is dry. Rinse the column with 2 mL of a 9.5 g/L solution of *nitric acid R*, dry the column and discard the eluate. Elute the column with 8.0 mL of a 9.5 g/L solution of *nitric acid R* until the column is dry. Transfer 5.0 mL of the eluate into a vial for liquid scintillation counting and add 10 mL of *liquid scintillation cocktail R*.

Determine the total radioactivity due to strontium-89 and strontium-90 in this solution by liquid scintillation spectrometry, and the radioactivity due to strontium-85 by gamma-ray spectrometry. Determine the radioactivity due to strontium-85 in the reference solution by gamma-ray spectrometry. Calculate the recovery of strontium-85 in the eluate. Calculate the measured total radioactivity of strontium-89 and strontium-90 in the eluate, taking into account the recovery of strontium and the fraction of eluate used.

Total radioactivity due to alpha-particle-emitting impurities: maximum 1×10^{-7} per cent of the total radioactivity.

The following method has been found to be suitable; other validated methods, approved by the competent authority, may be used.

Alpha-ray spectrometry.

Test solution. To 0.2 mL of the preparation to be examined add 1.0 mL of *plutonium-242 spiking solution R*, 1.0 mL of *americium-243 spiking solution R* and 9.0 mL of a 927 g/L solution of *hydrochloric acid R*. Evaporate the sample to dryness. Dissolve the residue in 2 mL of a 927 g/L solution of *hydrochloric acid R*. Evaporate again to dryness. Dissolve the residue in 2 mL of a 10.3 g/L solution of *hydrochloric acid R*.

Apply the test solution to a column containing 0.7 g of *anion-exchange resin R1*. Collect the eluate and wash the column with 1 mL of a 10.3 g/L solution of *hydrochloric acid R*. Evaporate the combined eluates to dryness and dissolve the residue in 2 mL of a 10.3 g/L solution of *hydrochloric acid R*. Apply this solution to a 2nd column containing 0.7 g of *anion-exchange resin R1*. Collect the eluate and wash the column with 1 mL of a 10.3 g/L solution of *hydrochloric acid R*. Evaporate the combined eluates to dryness and dissolve the residue in 1 mL of *nitric acid R*. Evaporate to dryness. Dissolve the residue again in 1 mL of *nitric acid R*.

Add 1 mL of a 42.6 g/L solution of *anhydrous sodium sulfate R* and evaporate to dryness. Add 0.3 mL of *sulfuric acid R*. Warm until the residue is dissolved. Add 4 mL of *distilled water R* and 0.01 mL of *thymol blue solution R*. Add *concentrated ammonia R* dropwise until the colour changes from red to yellow.

Prepare an electrodeposition cell as follows. An electropolished stainless steel planchet is fitted in the cap of a 20 mL polyethylene scintillation vial. The bottom of the vial has been cut off and a hole has been drilled through the centre of the cap for electrical connection to the planchet cathode. The planchet, 20 mm in diameter and 0.5 mm thick, is rinsed with *acetone R* and *water R* prior to use. The anode, a platinum spiral, is introduced through the bottom of the vial and fitted 5 mm from the cathode.

Pour the solution prepared as described above into the electrodeposition cell and rinse the container with a total of 5 mL of a 10 g/L solution of *sulfuric acid R* (the solution becomes slightly pink). Adjust to pH 2.1-2.4. with *concentrated ammonia R* or with a 200 g/L solution of *sulfuric acid R*. Electrolyse at 1.2 A for 75 min without stirring.

Add 1 mL of *concentrated ammonia R* about 1 min prior to switching off the current. Rinse the planchet with a 57 g/L solution of *ammonia R*. Rinse the planchet with *acetone R* and remove any residual solvent by patting the planchet with absorbent paper. Heat the planchet on a hot plate at 180 °C for 10 min.

Determine the radioactivity of alpha emitters by alpha-ray spectrometry, taking into account the recovery of the alpha-particle-emitting radionuclides (measured using the plutonium-242 and americium-243 spiking solutions).

Total of gamma-ray-emitting radionuclides other than molybdenum-99, technetium-99m, iodine-131, ruthenium-103 and tellurium-132: maximum 1×10^{-2} per cent of the total radioactivity.

The following method has been found to be suitable; other validated methods, approved by the competent authority, may be used.

Gamma-ray spectrometry.

Allow the preparation to decay for 4-6 weeks. Examine the gamma-ray spectrum for the presence of other gamma-ray-emitting impurities. Identify and quantify other gamma-ray-emitting impurities. The preparation may be released for use before completion of the test.

RADIOCHEMICAL PURITY

[^{99}Mo]Molybdate

The following method has been found to be suitable; other validated methods, approved by the competent authority, may be used.

Thin-layer chromatography (*2.2.27*).

Test solution. Dilute the preparation to be examined with a 4.0 g/L solution of *sodium hydroxide R* to a radioactivity concentration suitable for the detector.

Reference solution: 50 g/L solution of *sodium molybdate R* in a 4.0 g/L solution of *sodium hydroxide R*.

Plate: *TLC silica gel plate R*.

Mobile phase: 10.6 g/L solution of *anhydrous sodium carbonate R*.

Application: 5 µL of the test solution and 2 µL of the reference solution.

Development: over 2/3 of the plate.

Drying: in a current of warm air.

Detection: determine the distribution of radioactivity using a suitable detector and spray with a 2 g/L solution of *phenylhydrazine R* in *glacial acetic acid R*; heat at 100-105 °C for 5 min.

Retardation factor: molybdate and pertechnetate = about 0.9.

Limit:

– *sum of [^{99}Mo]molybdate and [^{99m}Tc]pertechnetate*: minimum 95 per cent of the total radioactivity.

RADIOACTIVITY

Determine the radioactivity using a calibrated instrument.

LABELLING

The label states that the preparation is only suitable for the preparation of technetium-99m generators.

IMPURITIES

A. iodine-131,

B. ruthenium-103,

C. tellurium-132,

D. strontium-89,

E. strontium-90.

Radiopharmaceutical preparations

01/2008:0124
corrected 7.0

SODIUM PERTECHNETATE (^{99m}Tc) INJECTION (FISSION)

Natrii pertechnetatis (^{99m}Tc) fissione formati solutio iniectabilis

This monograph applies to sodium pertechnetate (^{99m}Tc) injection obtained from molybdenum-99 extracted from fission products of uranium. Sodium pertechnetate (^{99m}Tc) injection obtained from molybdenum-99 produced by neutron irradiation of molybdenum is described in the monograph Sodium pertechnetate (^{99m}Tc) injection (non-fission) (0283).

DEFINITION

Sterile solution containing technetium-99m in the form of pertechnetate ion and made isotonic by the addition of sodium chloride. The injection may be prepared from a sterile preparation of molybdenum-99 under aseptic conditions.

Technetium-99m: 90 per cent to 110 per cent of the declared technetium-99m radioactivity at the date and time stated on the label.

CHARACTERS

Appearance: clear, colourless solution.

Half-life and nature of radiation of technetium-99m: see general chapter *5.7. Table of physical characteristics of radionuclides.*

IDENTIFICATION

Gamma-ray spectrometry.

Result: the most prominent gamma photon of technetium-99m has an energy of 0.141 MeV.

TESTS

pH (*2.2.3*): 4.0 to 8.0.

Aluminium: maximum 5 ppm.

Test solution. In a test tube about 12 mm in internal diameter, mix 1 mL of *acetate buffer solution pH 4.6 R* and 2 mL of a 1 in 2.5 dilution of the preparation to be examined in *water R*. Add 0.05 mL of a 10 g/L solution of *chromazurol S R*.

Reference solution. Prepare at the same time and in the same manner as the test solution and using 2 mL of *aluminium standard solution (2 ppm Al) R*.

After 3 min, the colour of the test solution is not more intense than that of the reference solution.

Sterility. It complies with the test for sterility prescribed in the monograph *Radiopharmaceutical preparations (0125)*. The preparation may be released for use before completion of the test.

RADIONUCLIDIC PURITY

Preliminary test. To obtain an approximate estimate before use of the preparation, take a volume equivalent to 37 MBq and determine the gamma-ray spectrum using a sodium iodide detector with a shield of lead, of thickness 6 mm, interposed between the sample and the detector. The response in the region corresponding to the 0.740 MeV photon of molybdenum-99 does not exceed that obtained using 37 kBq of a standardised molybdenum-99 solution measured under the same conditions, when all measurements are expressed with reference to the date and time of administration.

Definitive test. Retain a sample of the preparation to be examined for a sufficient time to allow the technetium-99m radioactivity to decay to a sufficiently low level to permit the detection of radionuclidic impurities. All measurements of radioactivity are expressed with reference to the date and time of administration.

- *Impurity A*: maximum 5×10^{-3} per cent of the total radioactivity.

  Gamma-ray spectrometry. *Record the spectrum of the decayed material.*

  Comparison: suitable instrument calibrated with the aid of a standardised iodine-131 solution.

  Results: the most prominent photon has an energy of 0.365 MeV; iodine-131 has a half-life of 8.04 days.
- *Impurity B*: maximum 0.1 per cent of the total radioactivity.

  Gamma-ray spectrometry. *Record the spectrum of the decayed material.*

  Comparison: suitable instrument calibrated with the aid of a standardised molybdenum-99 solution.

  Results: the most prominent photons have energies of 0.181 MeV, 0.740 MeV and 0.778 MeV; molybdenum-99 has a half-life of 66.0 h.
- *Impurity C*: maximum 5×10^{-3} per cent of the total radioactivity.

  Gamma-ray spectrometry. *Record the spectrum of the decayed material.*

  Comparison: suitable instrument calibrated using a standardised ruthenium-103 solution.

  Results: the most prominent photon has an energy of 0.497 MeV; ruthenium-103 has a half-life of 39.3 days.
- *Impurity D*: maximum 6×10^{-5} per cent of the total radioactivity.

  Determine the presence of strontium-89 in the decayed material with an instrument suitable for the detection of beta rays. It is usually necessary first to carry out chemical separation of the strontium so that the standard and the sample may be compared in the same physical and chemical form.

  Comparison: standardised strontium-89 solution.

  Results: strontium-89 decays with a beta emission of 1.492 MeV maximum energy and has a half-life of 50.5 days.
- *Impurity E*: maximum 6×10^{-6} per cent of the total radioactivity.

  Determine the presence of strontium-90 in the decayed material with an instrument suitable for the detection of beta rays. To distinguish strontium-90 from strontium-89, compare the radioactivity of yttrium-90, the daughter nuclide of strontium-90, with an yttrium-90 standard after the chemical separation of the yttrium. If prior chemical separation of the strontium is necessary, the conditions of radioactive equilibrium must be ensured. The yttrium-90 standard and the sample must be compared in the same physical and chemical form.

  Results: strontium-90 and yttrium-90 decay with respective beta emissions of 0.546 MeV and 2.284 MeV maximum energy and half-lives of 29.1 years and 64.0 h.
- *Other gamma-emitting impurities*: maximum 0.01 per cent of the total radioactivity.

  Gamma-ray spectrometry.

  Examine the spectrum of the decayed material for the presence of other radionuclidic impurities, which should, where possible, be identified and quantified.
- *Alpha-emitting impurities*: maximum 1×10^{-7} per cent of the total radioactivity.

  Measure the alpha radioactivity of the decayed material to detect any alpha-emitting radionuclidic impurities, which should, where possible, be identified and quantified.

RADIOCHEMICAL PURITY

[^{99m}Tc]Pertechnetate ion. Descending paper chromatography (*2.2.26*).

Test solution. Dilute the preparation to be examined with *water R* to a suitable radioactive concentration.

Paper: *paper for chromatography R.*

Radiopharmaceutical preparations

Mobile phase: *water R*, *methanol R* (20:80 *V/V*).

Application: 5 µL.

Development: for 2 h.

Drying: in air.

Detection: suitable detector to determine the distribution of radioactivity.

Retardation factor: [^{99m}Tc]pertechnetate ion = about 0.6.

Limit:

– *[^{99m}Tc]pertechnetate ion*: minimum 95 per cent of the total radioactivity due to technetium-99m.

RADIOACTIVITY

Determine the radioactivity using a calibrated instrument.

IMPURITIES

A. iodine-131,

B. molybdenum-99,

C. ruthenium-103,

D. strontium-89,

E. strontium-90.

01/2008:0283
corrected 7.0

SODIUM PERTECHNETATE (^{99m}Tc) INJECTION (NON-FISSION)

Natrii pertechnetatis (^{99m}Tc) sine fissione formati solutio iniectabilis

This monograph applies to sodium pertechnetate (^{99m}Tc) injection obtained from molybdenum-99 produced by neutron irradiation of molybdenum. Sodium pertechnetate (^{99m}Tc) injection obtained from molybdenum-99 extracted from fission products of uranium is described in the monograph Sodium pertechnetate(^{99m}Tc) injection (fission) (0124).

DEFINITION

Sterile solution containing technetium-99m in the form of pertechnetate ion and made isotonic by the addition of sodium chloride.

Technetium-99m: 90 per cent to 110 per cent of the declared technetium-99m radioactivity at the date and time stated on the label.

CHARACTERS

Appearance: clear, colourless solution.

Half-life and nature of radiation of technetium-99m: see general chapter *5.7. Table of physical characteristics of radionuclides*.

IDENTIFICATION

A. Gamma-ray spectrometry.

Result: the most prominent gamma photon of technetium-99m has an energy of 0.141 MeV.

B. Examine the chromatogram obtained in the test for radiochemical purity (see Tests).

Result: the retardation factor of the principal peak in the radiochromatogram obtained with the test solution is about 0.6.

TESTS

pH (*2.2.3*): 4.0 to 8.0.

Aluminium: maximum 5 ppm.

Test solution. In a test tube about 12 mm in internal diameter, mix 1 mL of *acetate buffer solution pH 4.6 R* and 2 mL of a 1 in 2.5 dilution of the preparation to be examined in *water R*. Add 0.05 mL of a 10 g/L solution of *chromazurol S R*.

Reference solution. Prepare at the same time and in the same manner as the test solution and using 2 mL of *aluminium standard solution (2 ppm Al) R*.

After 3 min, the colour of the test solution is not more intense than that of the reference solution.

Sterility. It complies with the test for sterility prescribed in the monograph *Radiopharmaceutical preparations (0125)*. The preparation may be released for use before completion of the test.

RADIONUCLIDIC PURITY

Preliminary test. To obtain an approximate estimate before use of the preparation, take a volume equivalent to 37 MBq and record the gamma-ray spectrum using a sodium iodide detector with a shield of lead, 6 mm thick, interposed between the sample and the detector. The response in the region corresponding to the 0.740 MeV photon of molybdenum-99 does not exceed that obtained using 37 kBq of a standardised molybdenum-99 solution measured under the same conditions, when all measurements are expressed with reference to the date and time of administration.

Definitive test. Retain a sample of the preparation to be examined for a sufficient time to allow the technetium-99m radioactivity to decay to a sufficiently low level to permit the detection of radionuclidic impurities. All measurements of radioactivity are expressed with reference to the date and time of administration.

– *Impurity A*: maximum 0.1 per cent of the total radioactivity.

Gamma-ray spectrometry. Record the gamma-ray spectrum of the decayed material.

Comparison: standardised molybdenum-99 solution.

Results: the most prominent gamma photons have energies of 0.181 MeV, 0.740 MeV and 0.778 MeV; molybdenum-99 has a half-life of 66.0 h.

– *Other gamma-emitting impurities*: maximum 0.01 per cent of the total radioactivity.

Gamma-ray spectrometry. Examine the gamma-ray spectrum of the decayed material for the presence of other radionuclidic impurities, which should, where possible, be identified and quantified.

RADIOCHEMICAL PURITY

[^{99m}Tc]Pertechnetate ion. Descending paper chromatography (*2.2.26*).

Test solution. Dilute the preparation to be examined with *water R* to a suitable radioactive concentration.

Paper: *paper for chromatography R*.

Mobile phase: *water R*, *methanol R* (20:80 *V/V*).

Application: 5 µL.

Development: for 2 h.

Drying: in air.

Detection: suitable detector to determine the distribution of radioactivity.

Retardation factor: [^{99m}Tc]pertechnetate ion = about 0.6.

Limit:

– *[^{99m}Tc]pertechnetate ion*: minimum 95 per cent of the total radioactivity due to technetium-99m.

RADIOACTIVITY

Determine the radioactivity using a calibrated instrument.

IMPURITIES

A. molybdenum-99.

Radiopharmaceutical preparations

01/2008:0284
corrected 7.0

SODIUM PHOSPHATE (^{32}P) INJECTION

Natrii phosphatis (^{32}P) solutio iniectabilis

DEFINITION

Sterile solution of disodium and monosodium (^{32}P) orthophosphates made isotonic by the addition of sodium chloride.

Phosphorus-32: 90 per cent to 110 per cent of the declared phosphorus-32 radioactivity at the date and time stated on the label.

Specific radioactivity: minimum 11.1 MBq of phosphorus-32 per milligram of orthophosphate ion.

CHARACTERS

Appearance: clear, colourless solution.

Half-life and nature of radiation of phosphorus-32: see general chapter *5.7. Table of physical characteristics of radionuclides.*

IDENTIFICATION

A. Beta-ray spectrometry.

Result: the maximum energy of the beta radiation is 1.71 MeV.

B. Examine the chromatogram obtained in the test for radiochemical purity (see Tests).

Result: the principal peak in the radiochromatogram obtained with the test solution is similar in retardation factor to the principal peak in the chromatogram obtained with the reference solution.

TESTS

pH (*2.2.3*): 6.0 to 8.0.

Phosphates: maximum 89 µg/MBq.

Test solution. Dilute the preparation to be examined with *water R* to give a radioactive concentration of 370 kBq of phosphorus-32 per millilitre. Mix in a volumetric flask, with shaking, 1.0 mL of this solution with a mixture of 0.5 mL of *ammonium molybdate solution R*, 0.5 mL of a 2.5 g/L solution of *ammonium vanadate R* and 1 mL of *perchloric acid R*, and dilute to 5.0 mL with *water R*.

Reference solution. Prepare at the same time and in the same manner as the test solution, using 1.0 mL of a solution containing 33 mg of orthophosphate ion per litre.

After 30 min, the test solution is not more intensely coloured than the reference solution.

Sterility. It complies with the test for sterility prescribed in the monograph *Radiopharmaceutical preparations (0125)*. The preparation may be released for use before completion of the test.

RADIONUCLIDIC PURITY

Beta-ray spectrometry.

Result: the spectrum obtained with the preparation to be examined does not differ significantly from that obtained under the same conditions with a standardised phosphorus-32 solution.

RADIOCHEMICAL PURITY

[^{32}P]Phosphate. Ascending paper chromatography (*2.2.26*).

Test solution. Dilute the preparation to be examined with *water R* until the radioactivity is equivalent to 10 000-20 000 counts per minute per 10 µL.

Reference solution. A solution of *phosphoric acid R* containing 2 mg of phosphorus per millilitre.

Paper: *paper for chromatography R*; use a strip of paper 25 mm wide and about 300 mm long.

Mobile phase: mixture of 0.3 mL of *ammonia R*, 5 g of *trichloroacetic acid R*, 25 mL of *water R* and 75 mL of *2-propanol R*.

Application: 10 µL of the reference solution, then apply to the same point of application 10 µL of the test solution.

Development: for 16 h.

Drying: in air.

Detection: determine the position of the non-radioactive phosphoric acid by spraying with a 50 g/L solution of *perchloric acid R* and then with a 10 g/L solution of *ammonium molybdate R*. Expose the paper to *hydrogen sulfide R*. A blue colour develops. Determine the distribution of radioactivity using a suitable detector.

Limit:

– *[^{32}P]phosphate*: minimum 95 per cent of the total radioactivity due to phosphorus-32.

RADIOACTIVITY

Determine the radioactivity using a calibrated instrument.

01/2008:1475
corrected 7.0

STRONTIUM (^{89}Sr) CHLORIDE INJECTION

Strontii (^{89}Sr) chloridi solutio iniectabilis

DEFINITION

Sterile solution of [^{89}Sr]strontium chloride.

Strontium-89: 90 per cent to 110 per cent of the declared strontium-89 radioactivity at the date stated on the label.

Specific radioactivity: minimum 1.8 MBq of strontium-89 per milligram of strontium.

Strontium: 6.0 mg/mL to 12.5 mg/mL.

CHARACTERS

Appearance: clear, colourless solution.

Half-life and nature of radiation of strontium-89: see general chapter *5.7. Table of physical characteristics of radionuclides.*

IDENTIFICATION

A. Gamma-ray and X-ray spectrometry.

Result: the gamma photon detected has an energy of 0.909 MeV and is due to the short-lived daughter product, yttrium-89m (formed in 0.01 per cent of the disintegrations), in equilibrium with the strontium-89.

B. To 0.1 mL of the preparation to be examined, add 1 mL of a freshly prepared 1 g/L solution of *sodium rhodizonate R*. Mix and allow to stand for 1 min. A reddish-brown precipitate is formed.

C. To 0.1 mL of *silver nitrate solution R2* add 50 µL of the preparation to be examined. A white precipitate is formed.

TESTS

pH (*2.2.3*): 4.0 to 7.5.

Note: the following tests for aluminium, iron and lead may be carried out simultaneously with the test for strontium. If this is not the case, the reference solutions are prepared such that they contain strontium at approximately the same concentration as in the test solution.

Aluminium: maximum 2 µg/mL.

Atomic emission spectrometry (plasma or arc method) (*2.2.22, Method I*).

Test solution. Dilute 0.2 mL of the preparation to be examined to a suitable volume with *dilute nitric acid R*.

Reference solutions. Prepare the reference solutions using *aluminium standard solution (10 ppm Al) R* diluted as necessary with *dilute nitric acid R*.

Iron: maximum 5 µg/mL.

Atomic emission spectrometry (plasma or arc method) (*2.2.22, Method I*).

Test solution. Dilute 0.2 mL of the preparation to be examined to a suitable volume with *dilute nitric acid R*.

Reference solutions. Prepare the reference solutions using *iron standard solution (20 ppm Fe) R* diluted as necessary with *dilute nitric acid R*.

Lead: maximum 5 µg/mL.

Atomic emission spectrometry (plasma or arc method) (*2.2.22, Method I*).

Test solution. Dilute 0.2 mL of the preparation to be examined to a suitable volume with *dilute nitric acid R*.

Reference solutions. Prepare the reference solutions using *lead standard solution (10 ppm Pb) R* diluted as necessary with *dilute nitric acid R*.

Strontium: 6.0 mg/mL to 12.5 mg/mL.

Atomic emission spectrometry (*2.2.22, Method I*).

Test solution. Dilute 0.2 mL of the preparation to be examined to a suitable volume with *dilute nitric acid R*.

Reference solutions. Prepare the reference solutions using *strontium standard solution (1.0 per cent Sr) R* diluted as necessary with *dilute nitric acid R*.

Sterility. It complies with the test for sterility prescribed in the monograph *Radiopharmaceutical preparations (0125)*.

RADIONUCLIDIC PURITY

The total radioactivity due to radionuclides other than strontium-89 is not more than 0.6 per cent.

Gamma emitters other than yttrium-89m: maximum 0.4 per cent of the total radioactivity.

Gamma-ray and X-ray spectrometry.

Beta emitters. Evaporate to dryness 100 µL of the preparation to be examined under a radiant heat source. Dissolve the residue in 2 mL of *47 per cent hydrobromic acid R*, evaporate to dryness under the radiant heat source and dissolve the residue in 2 mL of *dilute hydrobromic acid R1*. Transfer the solution to the top of a column, 5-6 mm in diameter, packed with approximately 2 mL of *cation-exchange resin R1* (100-250 µm), previously conditioned with *dilute hydrobromic acid R1* and elute the column with the same solvent until 10 mL of eluate has been collected into a container containing 50 µL of a 15 g/L solution of *anhydrous sodium sulfate R* in *1 M hydrochloric acid*.

To a liquid scintillation cocktail vial add an appropriate volume of *liquid scintillation cocktail R* followed by 1 mL of *water R*, 0.1 mL of a 15 g/L solution of *anhydrous sodium sulfate R* in *1 M hydrochloric acid* and 100 µL of eluate. Shake to obtain a clear solution. Using suitable counting equipment determine the radioactivity due to impurities A and B in the sample.

Taking into account the recovery efficiency of the separation, counting efficiency and radioactive decay, determine the radioactive concentration of impurities A and B in the sample and hence the percentage of total beta emitting impurities in the injection to be examined.

Result:

– *impurities A and B*: maximum 0.2 per cent of the total radioactivity.

RADIOACTIVITY

Determine the radioactivity using a calibrated instrument.

IMPURITIES

A. sulfur-35,

B. phosphorus-32.

01/2008:2123

TECHNETIUM (^{99m}Tc) BICISATE INJECTION

Technetii (^{99m}Tc) bicisati solutio iniectabilis

DEFINITION

Sterile solution of a complex of technetium-99m with diethyl *N,N′*-ethylenedi-L-cysteinate. It may contain stabilisers and inert additives such as *Mannitol (0559)* and *Disodium edetate (0232)*.

Content: 90 per cent to 110 per cent of the declared technetium-99m radioactivity at the date and hour stated on the label.

PRODUCTION

It is prepared from *N,N′*-(1,2-ethylenediyl)bis[(2*R*)-2-amino-3-sulfanylpropanoic acid] diethyl ester and *Sodium pertechnetate (^{99m}Tc) injection (fission) (0124)* or *Sodium pertechnetate (^{99m}Tc) injection (non-fission) (0283)* in the presence of reducing agents such as a stannous salt.

CHARACTERS

Appearance: clear, colourless solution.

Half-life and nature of radiation of technetium-99m: see general chapter *5.7. Table of physical characteristics of radionuclides*.

IDENTIFICATION

A. Gamma-ray spectrometry.

Results: the most prominent gamma photon of technetium-99m has an energy of 0.141 MeV.

B. Examine the chromatograms obtained in the test for radiochemical purity (see Tests).

Results: the principal peak in the chromatogram obtained with the test solution is similar in retardation factor to the principal peak in the chromatogram obtained with reference solution (a).

TESTS

pH (*2.2.3*): 6.5 to 7.5.

Sterility. It complies with the test for sterility prescribed in the monograph on *Radiopharmaceutical preparations (0125)*. The injection may be released for use before completion of the test.

RADIOCHEMICAL PURITY

Impurities A, B, C, D, E, F. Thin-layer chromatography (*2.2.27*).

Test solution. The preparation to be examined.

Reference solution (a). To vial B of *bicisate labelling kit CRS* in lead shielding add 2 mL of sodium pertechnetate (^{99m}Tc) injection (fission or non-fission) containing 400-800 MBq. Dissolve the contents of vial A of *bicisate labelling kit CRS* in 3 mL of a 9 g/L solution of *sodium chloride R*. Immediately transfer 1.0 mL of the solution contained in vial A to vial B. Mix and allow to stand for 30 min at room temperature.

Reference solution (b). Sodium pertechnetate (^{99m}Tc) injection (fission or non fission).

Plate: *TLC silica gel plate R*.

Mobile phase: *ethyl acetate R*.

Application: 5 µL, allow the spots to dry for 5-10 min.

Development: over 4/5 of the plate.

Drying: in air.

Detection: determine the distribution of radioactivity using a suitable detector.

Retardation factors: technetium-99m bicisate = more than 0.4; impurities A, B, C, D, E and F = less than 0.2.

System suitability: the retardation factor of the principal peak in the chromatogram obtained with reference solution (a) is clearly different from the retardation factor of the peak in the chromatogram obtained with reference solution (b).

Limit:

– *sum of impurities A, B, C, D, E and F*: not more than 6 per cent of the total radioactivity.

RADIOACTIVITY

Determine the radioactivity using a calibrated instrument.

IMPURITIES

A. technetium-99m in colloidal form,

B. [^{99m}Tc]pertechnetate ion,

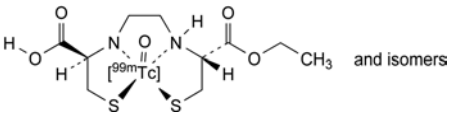

C. complex of technetium-99m with ethyl hydrogen *N,N′*-ethylenedi-L-cysteinate,

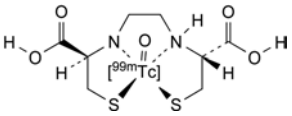

D. complex of technetium-99m with *N,N′*-ethylenedi-L-cysteine,

E. complex of technetium-99m with mannitol,

F. complex of technetium-99m with disodium edetate.

01/2009:0126
corrected 7.0

TECHNETIUM (^{99m}Tc) COLLOIDAL RHENIUM SULFIDE INJECTION

Rhenii sulfidi colloidalis et technetii (^{99m}Tc) solutio iniectabilis

DEFINITION

Sterile colloidal dispersion of rhenium sulfide, the micelles of which are labelled with technetium-99m. It is prepared using *Sodium pertechnetate (^{99m}Tc) injection (fission) (0124)* or *Sodium pertechnetate (^{99m}Tc) injection (non fission) (0283)*. It is stabilised with gelatin. The pH of the injection may be adjusted by the addition of a suitable buffer such as citrate buffer.

Technetium-99m: 90 per cent to 110 per cent of the declared technetium-99m radioactivity at the date and time stated on the label.

Rhenium: maximum 0.22 mg/mL.

CHARACTERS

Appearance: light brown liquid.

Half-life and nature of radiation of technetium-99m: see general chapter *5.7. Table of physical characteristics of radionuclides*.

IDENTIFICATION

A. Gamma-ray spectrometry.

Result: the most prominent gamma photon of technetium-99m has an energy of 0.141 MeV.

B. Examine the chromatogram obtained in the test for radiochemical purity (see Tests).

Result: the retardation factor of the principal peak in the radiochromatogram obtained with the test solution is 0.0 to 0.1.

C. To 1 mL add 1 mL of a 200 g/L solution of *stannous chloride R* in *hydrochloric acid R*, 5 mL of *hydrochloric acid R* and 5 mL of a 50 g/L solution of *thiourea R*. A yellow colour develops.

TESTS

pH (*2.2.3*): 4.0 to 7.0.

Rhenium: maximum 0.22 mg/mL.

Test solution. The preparation to be examined.

Reference solutions. Using a solution containing 100 µg of *potassium perrhenate R* (equivalent to 60 ppm of Re) and 240 µg of *sodium thiosulfate R* per millilitre, prepare a range of solutions and dilute to the same final volume with *water R*.

To 1 mL of the test solution and to 1 mL of each of the reference solutions add 1 mL of a 200 g/L solution of *stannous chloride R* in *hydrochloric acid R*, 5 mL of *hydrochloric acid R* and 5 mL of a 50 g/L solution of *thiourea R* and dilute to 25.0 mL with *water R*. Allow to stand for 40 min and measure the absorbance (*2.2.25*) of each solution at 400 nm, using a reagent blank as the compensation liquid. Using the absorbances obtained with the reference solutions, draw a calibration curve and calculate the concentration of rhenium in the preparation to be examined.

Physiological distribution. Inject a volume not greater than 0.2 mL into a caudal vein of each of 3 mice each weighing 20-25 g. Euthanise the mice 20 min after the injection, remove the liver, spleen and lungs and measure the radioactivity in the organs using a suitable instrument. Measure the radioactivity in the rest of the body after having removed the tail. Determine the percentage of radioactivity in the liver, the spleen and the lungs using the following expression:

$$\frac{A}{B} \times 100$$

A = radioactivity of the organ concerned;

B = total radioactivity in the liver, the spleen, the lungs and the rest of the body.

In each of the 3 mice at least 80 per cent of the radioactivity is found in the liver and spleen and not more than 5 per cent in the lungs. If the distribution of radioactivity in 1 of the 3 mice does not correspond to the prescribed proportions, repeat the test on a further 3 mice. The preparation complies with the test if the prescribed distribution of radioactivity is found in 5 of the 6 mice used. The preparation may be released for use before completion of the test.

Sterility. It complies with the test for sterility prescribed in the monograph *Radiopharmaceutical preparations (0125)*. The preparation may be released for use before completion of the test.

Bacterial endotoxins (*2.6.14*): less than 175/*V* IU/mL, *V* being the maximum recommended dose in millilitres.

RADIOCHEMICAL PURITY

[^{99m}Tc]Technetium in colloidal form. Ascending paper chromatography (*2.2.26*).

Test solution. The preparation to be examined.

Paper: *paper for chromatography R*.

Mobile phase: 9 g/L solution of *sodium chloride R*.

Application: 10 µL.

Development: immediately over a path of 10-15 cm.

Drying: in air.

Detection: suitable detector to determine the distribution of radioactivity.

Retardation factors: [^{99m}Tc]technetium in colloidal form = 0.0 to 0.1; impurity A = about 0.6; other impurities = 0.8 to 0.9.

Radiopharmaceutical preparations

Limit:
- *[^{99m}Tc]technetium in colloidal form*: minimum 92 per cent of the total radioactivity due to technetium-99m.

RADIOACTIVITY

Determine the radioactivity using a calibrated instrument.

LABELLING

The label states the concentration of rhenium expressed in milligrams per millilitre.

IMPURITIES

A. [^{99m}Tc]pertechnetate ion.

01/2008:0131
corrected 7.0

TECHNETIUM (^{99m}Tc) COLLOIDAL SULFUR INJECTION

Sulfuris colloidalis et technetii (^{99m}Tc) solutio iniectabilis

DEFINITION

Sterile, apyrogenic colloidal dispersion of sulfur, the micelles of which are labelled with technetium-99m. It is prepared using *Sodium pertechnetate (^{99m}Tc) injection (fission) (0124)* or *Sodium pertechnetate (^{99m}Tc) injection (non fission) (0283)*. It may be stabilised with a colloid-protecting substance based on gelatin. The pH of the injection may be adjusted by the addition of a suitable buffer, such as an acetate, citrate or phosphate buffer solution. The injection contains a variable quantity of colloidal sulfur, according to the method of preparation.

Technetium-99m: 90 per cent to 110 per cent of the declared technetium-99m radioactivity at the date and time stated on the label.

CHARACTERS

Appearance: clear or opalescent, colourless or yellowish liquid.

Half-life and nature of radiation of technetium-99 m: see general chapter *5.7. Table of physical characteristics of radionuclides*.

IDENTIFICATION

A. Gamma-ray spectrometry.

Result: the most prominent gamma photon of technetium-99m has an energy of 0.141 MeV.

B. Examine the chromatogram obtained in the test for radiochemical purity (see Tests).

Result: the retardation factor of the principal peak in the radiochromatogram obtained with the test solution is 0.0 to 0.1.

C. In a test-tube 100 mm long and 16 mm in internal diameter, evaporate 0.2 mL of the preparation to be examined to dryness. Dissolve the sulfur by shaking the residue with 0.2 mL of *pyridine R* and add about 20 mg of *benzoin R*. Cover the open end of the tube with a filter paper moistened with *lead acetate solution R*. Heat the test-tube in a bath containing glycerol at 150 °C. The paper slowly becomes brown.

TESTS

pH (*2.2.3*): 4.0 to 7.0.

Physiological distribution. Inject a volume not greater than 0.2 mL into the caudal vein of each of 3 mice, each weighing 20-25 g. Euthanise the mice 20 min after the injection, remove the liver, spleen and lungs and measure the radioactivity in these organs using a suitable instrument. Measure the radioactivity in the rest of the body of each animal after having removed the tail. Determine the percentage of radioactivity in the liver, the spleen and the lungs using the following expression:

$$\frac{A}{B} \times 100$$

A = radioactivity of the organ concerned;

B = total radioactivity in the liver, the spleen, the lungs and the rest of the body.

In each of the 3 mice at least 80 per cent of the radioactivity is found in the liver and spleen and not more than 5 per cent in the lungs. If the distribution of radioactivity in 1 of the 3 mice does not correspond to the prescribed proportions, repeat the test on a further 3 mice. The preparation to be examined complies with the test if the prescribed distribution of radioactivity is found in 5 of the 6 mice used. The preparation may be released for use before completion of the test.

Sterility. It complies with the test for sterility prescribed in the monograph *Radiopharmaceutical preparations (0125)*. The preparation may be released for use before completion of the test.

Pyrogens. It complies with the test for pyrogens prescribed in the monograph *Radiopharmaceutical preparations (0125)*. Inject, per kilogram of the rabbit's mass, not less than 0.1 mL. The preparation may be released for use before completion of the test.

RADIOCHEMICAL PURITY

[^{99m}Tc]Technetium in colloidal form. Ascending paper chromatography (*2.2.26*).

Test solution. The preparation to be examined.

Paper: *paper for chromatography R*.

Mobile phase: 9 g/L solution of *sodium chloride R*.

Application: 10 µL.

Development: immediately, over a path of 10-15 cm.

Drying: in air.

Detection: suitable detector to determine the distribution of radioactivity.

Retardation factors: [^{99m}Tc]technetium in colloidal form = 0.0 to 0.1; impurity A = about 0.6; other impurities = 0.8 to 0.9.

Limit:
- *[^{99m}Tc]technetium in colloidal form*: minimum 92 per cent of the total radioactivity due to technetium-99m.

RADIOACTIVITY

Determine the radioactivity using a calibrated instrument.

IMPURITIES

A. [^{99m}Tc]pertechnetate ion.

01/2008:0689
corrected 7.0

TECHNETIUM (^{99m}Tc) COLLOIDAL TIN INJECTION

Stanni colloidalis et technetii (^{99m}tc) solutio iniectabilis

DEFINITION

Sterile, colloidal dispersion of tin labelled with technetium-99m. It is prepared using *Sodium pertechnetate (^{99m}Tc) injection (fission) (0124)* or *Sodium pertechnetate (^{99m}Tc) injection (non fission) (0283)*. The injection contains a variable quantity of tin not exceeding 1 mg of Sn per millilitre; it contains fluoride ions, it may be stabilised with a suitable, apyrogenic colloid-protecting substance and it may contain a suitable buffer.

Radiopharmaceutical preparations

Technetium-99m: 90 per cent to 110 per cent of the declared technetium-99m radioactivity at the date and time stated on the label.

Tin: maximum 1 mg/mL.

CHARACTERS

Appearance: clear or opalescent, colourless solution.

Half-life and nature of radiation of technetium-99m: see general chapter *5.7. Table of physical characteristics of radionuclides*.

IDENTIFICATION

A. Gamma-ray spectrometry.

Result: the most prominent gamma photon of technetium-99m has an energy of 0.141 MeV.

B. Mix 0.05 mL of *zirconyl nitrate solution R* with 0.05 mL of *alizarin S solution R*. Add 0.05 mL of the preparation to be examined. A yellow colour is produced.

TESTS

pH (*2.2.3*): 4.0 to 7.0.

Tin: maximum 1 mg/mL.

Test solution. Dilute 3.0 mL of the preparation to be examined to 50.0 mL with a 103 g/L solution of *hydrochloric acid R*.

Reference solution. Dissolve 0.115 g of *stannous chloride R* in a 103 g/L solution of *hydrochloric acid R* and dilute to 1000.0 mL with the same acid.

To 1.0 mL of each solution add 0.05 mL of *thioglycollic acid R*, 0.1 mL of *dithiol reagent R*, 0.4 mL of a 20 g/L solution of *sodium laurilsulfate R* and 3.0 mL of a 21 g/L solution of *hydrochloric acid R*. Mix. Measure the absorbance (*2.2.25*) of each solution at 540 nm, using a 21 g/L solution of *hydrochloric acid R* as the compensation liquid. The absorbance of the test solution is not greater than that of the reference solution.

Physiological distribution. Inject not more than 0.2 mL into a caudal vein of each of 3 mice, each weighing 20-25 g. Euthanise the mice 20 min after the injection and remove the liver, spleen and lungs. Measure the radioactivity in the organs using a suitable instrument. Measure the radioactivity in the rest of the body of each animal, after having removed the tail. Determine the percentage of radioactivity in the liver, the spleen and the lungs with respect to the total radioactivity of all organs and the rest of the body excluding the tail.

In each of the 3 mice at least 80 per cent of the radioactivity is found in the liver and spleen and not more than 5 per cent in the lungs. If the distribution of radioactivity in 1 of the 3 mice does not correspond to the prescribed proportions, repeat the test on a further 3 mice. The preparation to be examined complies with the test if the prescribed distribution of radioactivity is found in 5 of the 6 mice used.

Sterility. It complies with the test for sterility prescribed in the monograph *Radiopharmaceutical preparations (0125)*. The preparation may be released for use before completion of the test.

RADIOCHEMICAL PURITY

[^{99m}Tc]Technetium in colloidal form. Thin-layer chromatography (*2.2.27*).

Test solution. The preparation to be examined.

Plate: *TLC silica gel plate R*; use silica gel as the coating substance on a glass-fibre sheet heated at 110 °C for 10 min.

Mobile phase: 9 g/L solution of *sodium chloride R* purged with *nitrogen R*.

Application: 5-10 µL.

Development: over a path of 10-15 cm in about 10 min.

Drying: in air.

Detection: suitable detector to determine the distribution of radioactivity.

Retardation factors: [^{99m}Tc]technetium in colloidal form = 0.0 to 0.1; impurity A = 0.9 to 1.0.

Limit:

– *[^{99m}Tc]technetium in colloidal form*: minimum 95 per cent of the radioactivity due to technetium-99m.

RADIOACTIVITY

Determine the radioactivity using a calibrated instrument.

IMPURITIES

A. [^{99m}Tc]pertechnetate ion.

01/2008:0585

TECHNETIUM (^{99m}Tc) ETIFENIN INJECTION

Technetii (^{99m}Tc) et etifenini solutio iniectabilis

DEFINITION

Technetium (^{99m}Tc) etifenin injection is a sterile solution which may be prepared by mixing sodium pertechnetate (^{99m}Tc) injection (fission or non-fission) with solutions of etifenin [[(2,6-diethylphenyl)carbamoylmethylimino]di-acetic acid; $C_{16}H_{22}N_2O_5$] and stannous chloride. The injection contains a variable quantity of tin (Sn) not exceeding 0.2 mg/mL. The injection contains not less than 90.0 per cent and not more than 110.0 per cent of the declared technetium-99m radioactivity at the date and hour stated on the label. Not less than 95.0 per cent of the radioactivity corresponds to technetium-99m complexed with etifenin.

It is prepared from sodium pertechnetate (^{99m}Tc) injection (fission or non-fission) using suitable, sterile ingredients and calculating the ratio of radionuclidic impurities with reference to the date and hour of administration.

CHARACTERS

A clear, colourless solution.

Technetium-99m has a half-life of 6.02 h and emits gamma radiation.

IDENTIFICATION

A. Record the gamma-ray spectrum using a suitable instrument. The spectrum does not differ significantly from that of a standardised technetium-99m solution either by direct comparison or by using an instrument calibrated with the aid of such a solution. Standardised technetium-99m and molybdenum-99 solutions are available from laboratories recognised by the competent authority. The most prominent gamma photon of technetium-99m has an energy of 0.140 MeV.

B. Examine by liquid chromatography (*2.2.29*).

Test solution. Dilute the injection to be examined with *methanol R* to obtain a solution containing about l mg of etifenin per millilitre.

Reference solution. Dissolve 5.0 mg of *etifenin CRS* in *methanol R* and dilute to 5.0 mL with the same solvent.

The chromatographic procedure may be carried out using:

– a column 0.25 m long and 4.6 mm in internal diameter packed with *octadecylsilyl silica gel for chromatography R* (5 µm to 10 µm),

– as mobile phase at a flow rate of 1 mL/min a mixture of 20 volumes of *methanol R* and 80 volumes of a 14 g/L solution of *potassium dihydrogen phosphate R* adjusted to pH 2.5 by the addition of *phosphoric acid R*,

– a spectrophotometer set at 230 nm.

Radiopharmaceutical preparations

Inject 20 µL of each solution. The principal peak in the chromatogram obtained with the test solution has a similar retention time to the principal peak in the chromatogram obtained with the reference solution.

TESTS

pH (*2.2.3*). The pH of the injection is 4.0 to 6.0.

Physiological distribution. Inject 0.1 mL (equivalent to about 3.7 MBq) into a caudal vein of each of three mice, each weighing 20 g to 25 g. Euthanise the mice l h after the injection. Remove the liver, gall-bladder, small intestine, large intestine and kidneys, collecting excreted urine. Measure the radioactivity in the organs using a suitable instrument. Measure the radioactivity of the rest of the body, after having removed the tail. Determine the percentage of radioactivity in each organ from the expression:

$$\frac{A}{B} \times 100$$

A = radioactivity of the organ concerned,

B = radioactivity of all organs and the rest of the body, excluding the tail.

In not fewer than two mice the sum of the percentages of radioactivity in the gall-bladder and small and large intestine is not less than 80 per cent. Not more than 3 per cent of the radioactivity is present in the liver, and not more than 2 per cent in the kidneys

Tin

Test solution. Dilute 1.0 mL of the injection to be examined to 5.0 mL with *1 M hydrochloric acid*.

Reference solution. Prepare a reference solution containing 0.075 mg of *stannous chloride R* per millilitre in *1 M hydrochloric acid*.

To 1.0 mL of each solution add 0.4 mL of a 20 g/L solution of *sodium laurilsulfate R*, 0.05 mL of *thioglycollic acid R*, 0.l mL of *dithiol reagent R* and 3.0 mL of *0.2 M hydrochloric acid*. Mix. Measure the absorbance (*2.2.25*) of each solution at 540 nm, using *0.2 M hydrochloric acid* as the compensation liquid. The absorbance of the test solution is not greater than that of the reference solution (0.2 mg of Sn per millilitre).

Sterility. It complies with the test for sterility prescribed in the monograph on *Radiopharmaceutical preparations (0125)*. The injection may be released for use before completion of the test.

RADIOCHEMICAL PURITY

Examine by thin-layer chromatography (*2.2.27*) using silicic acid as the coating substance on a glass-fibre sheet. Heat the plate at 110 °C for l0 min. The plate used should be such that during development the mobile phase moves over a distance of 10 cm to 15 cm in about 15 min.

Apply to the plate 5 µL to 10 µL of the injection to be examined. Develop immediately over a path of 10 cm to 15 cm using a 9 g/L solution of *sodium chloride R*. Allow the plate to dry. Determine the distribution of radioactivity using a suitable detector. Technetium-99m complexed with etifenin migrates almost to the middle of the chromatogram and pertechnetate ion migrates with the solvent front. Impurities in colloidal form remain at the point of application. The radioactivity corresponding to technetium-99m complexed with etifenin represents not less than 95.0 per cent of the total radioactivity of the chromatogram.

RADIOACTIVITY

Measure the radioactivity using suitable counting equipment by comparison with a standardised technetium-99m solution or by measurement in an instrument calibrated with the aid of such a solution.

01/2008:1925

TECHNETIUM (^{99m}Tc) EXAMETAZIME INJECTION

Technetii (^{99m}Tc) exametazimi solutio iniectabilis

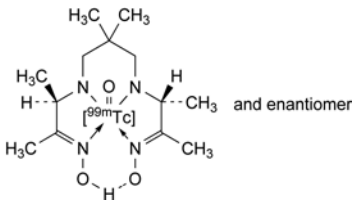

DEFINITION

Sterile solution of lipophilic technetium-99m exametazime which may be prepared by dissolving a racemic mixture of (3*RS*,9*RS*)-4,8-diaza-3,6,6,9-tetramethylundecane-2,10-dione bisoxime in the presence of a stannous salt in *Sodium pertechnetate (^{99m}Tc) injection (fission) (0124)* or *Sodium pertechnetate (^{99m}Tc) injection (non-fission) (0283)*. It may contain stabilisers and inert additives.

Content: 90 per cent to 110 per cent of the declared technetium-99m radioactivity at the date and time stated on the label.

Purity: minimum of 80 per cent of the total radioactivity corresponds to lipophilic technetium-99m exametazime and its *meso* isomer.

CHARACTERS

Appearance: clear solution.

Half-life and nature of radiation of technetium-99m: see general chapter *5.7. Table of physical characteristics of radionuclides*.

IDENTIFICATION

A. Gamma-ray spectrometry.

Comparison: standardised technetium-99m solution, or by using a calibrated instrument. Standardised technetium-99m solutions and/or standardisation services are available from the competent authority.

Results: the spectrum obtained with the solution to be examined does not differ significantly from that obtained with a standardised technetium-99m solution. The most prominent gamma photon has an energy of 0.141 MeV.

B. Examine the chromatograms obtained in the test Impurity A under Radiochemical purity.

Results: the principal peak in the chromatogram obtained with the test solution is similar in retention time to the peak due to lipophilic technetium-99m exametazime in the chromatogram obtained with the reference solution.

TESTS

pH (*2.2.3*): 5.0 to 10.0.

Sterility. It complies with the test for sterility prescribed in the monograph on *Radiopharmaceutical preparations (0125)*. The injection may be released for use before completion of the test.

RADIOCHEMICAL PURITY

Impurity C. Thin-layer chromatography (*2.2.27*).

Test solution. The preparation to be examined.

Plate: *TLC silica gel plate R*; use a glass-fibre plate.

Mobile phase: 9 g/L solution of *sodium chloride R*.

Application: about 5 µL.

Development: immediate, over 2/3 of the plate.

Drying: in air.

Radiopharmaceutical preparations

Detection: determine the distribution of radioactivity using a suitable detector.

Retardation factors: impurity C = 0.8 to 1.0; lipophilic technetium-99m exametazime and impurities A, B, D and E do not migrate.

Limits:

– *impurity C*: maximum 10 per cent of the total radioactivity.

Total of lipophilic technetium-99m exametazime and impurity A. Thin-layer chromatography (*2.2.27*).

Test solution. The preparation to be examined.

Plate: *TLC silica gel plate R*; use a glass-fibre plate.

Mobile phase: *methyl ethyl ketone R*.

Application: about 5 µL.

Development: immediate, over 2/3 of the plate.

Drying: in air.

Detection: determine the distribution of radioactivity using a suitable detector.

Retardation factors: lipophilic technetium-99m exametazime = 0.8 to 1.0, impurity A = 0.8 to 1.0, impurity C = 0.8 to 1.0; impurities B, D and E do not migrate.

Limits: calculate the percentage of radioactivity due to impurities B, D and E from test B (*B*) and the percentage of the radioactivity due to impurity C from test A (*A*). Calculate the total percentage of lipophilic technetium-99m exametazime and impurity A from the expression:

$$100 - A - B$$

– *total of lipophilic technetium-99m exametazime and impurity A*: minimum 80 per cent of the total radioactivity.

Impurity A. Liquid chromatography (*2.2.29*).

Test solution. The preparation to be examined.

Reference solution. Dissolve the contents of a vial of *meso-rich exametazime CRS* in 0.5 mL of a 9 g/L solution of *sodium chloride R* and transfer to a lead-shielded, nitrogen-filled vial. Add 6 µL of a freshly prepared 1 g/L solution of *stannous chloride R* in *0.05 M hydrochloric acid* and 2.5 mL of sodium pertechnetate (^{99m}Tc) injection (fission or non-fission) containing 370-740 MBq. Mix carefully and use within 30 min of preparation.

Column:

– *size*: *l* = 0.25 m, Ø = 4.6 mm,

– *stationary phase*: spherical *base-deactivated end-capped octadecylsilyl silica gel for chromatography R* (5 µm) with a pore size of 13 nm and a carbon loading of 11 per cent.

Mobile phase: mix 33 volumes of *acetonitrile R* and 67 volumes of *0.1 M phosphate buffer solution pH 3.0 R*.

Flow rate: 1.5 mL/min.

Detection: radioactivity detector.

Injection: loop injector.

Run time: 20 min.

Relative retention with reference to lipophilic technetium-99m exametazime: impurity A = about 1.2.

System suitability: reference solution:

– chromatogram similar to the chromatogram provided with *meso-rich exametazime CRS*,

– *resolution*: minimum of 2 between the peaks due to lipophilic technetium-99m exametazime and to impurity A.

Limits:

– *impurity A*: maximum 5 per cent of the radioactivity due to lipophilic technetium-99m exametazime and impurity A.

RADIOACTIVITY

Measure the radioactivity using suitable equipment by comparison with a standardised technetium-99m solution or by using a calibrated instrument.

IMPURITIES

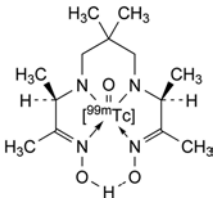

A. *meso* isomer of lipophilic technetium-99m exametazime,

B. technetium-99m in colloidal form,

C. [^{99m}Tc]pertechnetate ion,

D. non lipophilic technetium-99m exametazime complex,

E. *meso* isomer of non lipophilic technetium-99m exametazime complex.

01/2008:1047
corrected 7.0

TECHNETIUM (^{99m}Tc) GLUCONATE INJECTION

Technetii (^{99m}Tc) gluconatis solutio iniectabilis

DEFINITION

Sterile solution of a complex of technetium-99m with calcium gluconate. It is prepared using *Sodium pertechnetate (^{99m}Tc) injection fission (0124)* or *Sodium pertechnetate (^{99m}Tc) injection non fission (0283)*.

Technetium-99m: 90 per cent to 110 per cent of the declared technetium-99m radioactivity at the date and time stated on the label.

CHARACTERS

Appearance: slightly opalescent solution.

Half-life and nature of radiation of technetium-99m: see general chapter *5.7. Table of characteristics of radionuclides*.

IDENTIFICATION

A. Gamma-ray spectrometry.

Result: the most prominent gamma photon of technetium-99m has an energy of 0.141 MeV.

B. 5 µL of the preparation to be examined complies with identification A prescribed in the monograph *Calcium gluconate (0172)*.

C. Examine the chromatograms obtained in tests A and B for radiochemical purity (see Tests).

Results:

– the retardation factor of the principal peak in the radiochromatogram obtained with the test solution in test A is 0.9 to 1.0;

– the retardation factor of the principal peak in the radiochromatogram obtained with the test solution in test B is 0.0 to 0.1.

TESTS

pH (*2.2.3*): 6.0 to 8.5.

Physiological distribution. Inject a volume not greater than 0.2 mL into the caudal vein of each of 3 rats weighing 150-250 g. Measure the radioactivity of the syringe before and after injection. Euthanise the rats 30 min after the injection. Remove at least 1 g of blood by a suitable method and remove the kidneys, the liver, the bladder plus voided urine and the tail. Weigh the sample of blood.

Determine the radioactivity in the organs, the blood sample and the tail using a suitable instrument. Calculate the percentage of radioactivity in each organ and in 1 g of

blood with respect to the total radioactivity calculated as the difference between the 2 measurements made on the syringe minus the activity in the tail. Correct the blood concentration by multiplying by a factor of *m*/200 where *m* is the body mass of the rat in grams.

In not fewer than 2 of the 3 rats used, the radioactivity is:

- *in the kidneys*: minimum 15 per cent,
- *in the bladder plus voided urine*: minimum 20 per cent,
- *in the liver*: maximum 5 per cent.
- *in the blood*, after correction: maximum 0.50 per cent.

Sterility. It complies with the test for sterility prescribed in the monograph *Radiopharmaceutical preparations (0125)*. The preparation may be released for use before completion of the test.

RADIOCHEMICAL PURITY

A. Impurity A. Thin-layer chromatography (*2.2.27*).

Test solution. The preparation to be examined.

Plate: *TLC silica gel plate R*; use silica gel as the coating substance on a glass-fibre sheet heated at 110 °C for 10 min.

Mobile phase: 9 g/L solution of *sodium chloride R*.

Application: 5-10 µL.

Development: immediately over a path of 10-15 cm in about 10 min.

Drying: in air.

Detection: suitable detector to determine the distribution of radioactivity.

Retardation factors: impurity A = 0.0 to 0.1; [^{99m}Tc]technetium gluconate and impurity B = 0.9 to 1.0.

B. Impurity B. Thin-layer chromatography (*2.2.27*).

Test solution. The preparation to be examined.

Plate: *TLC silica gel plate R*; use silica gel as the coating substance on a glass-fibre sheet heated at 110 °C for 10 min.

Mobile phase: *methyl ethyl ketone R*.

Application: 5-10 µL and allow to dry.

Development: over a path of 10-15 cm in about 10 min.

Drying: in a current of warm air.

Detection: suitable detector to determine the distribution of radioactivity.

Retardation factors: [^{99m}Tc]technetium gluconate and impurity A = 0.0 to 0.1; impurity B = 0.9 to 1.0.

Limit:

- *sum of impurities A and B*: maximum 10 per cent of the radioactivity due to technetium-99m in the chromatograms obtained in tests A and B.

RADIOACTIVITY

Determine the radioactivity using a calibrated instrument.

IMPURITIES

A. [^{99m}Tc]technetium in colloidal form,

B. [^{99m}Tc]pertechnetate ion.

01/2008:0640
corrected 7.0

TECHNETIUM (^{99m}Tc) HUMAN ALBUMIN INJECTION

Technetii (^{99m}Tc) humani albumini solutio iniectabilis

DEFINITION

Sterile, apyrogenic solution of human albumin labelled with technetium-99m. It is prepared using *Sodium pertechnetate (^{99m}Tc) injection (fission) (0124)* or *Sodium pertechnetate (^{99m}Tc) injection (non fission) (0283)*. It contains a reducing substance, such as a tin salt in an amount not exceeding 1 mg of Sn per millilitre. Although, at present, no definite value for a maximum limit of tin can be fixed, available evidence tends to suggest the importance of keeping the ratio of tin to albumin as low as possible. It may contain a suitable buffer and an antimicrobial preservative. The human albumin used complies with the requirements of the monograph *Human albumin solution (0255)*.

Technetium-99m: 90 per cent to 110 per cent of the declared technetium-99m radioactivity at the date and time stated on the label.

Albumin: 90.0 per cent to 110.0 per cent of the quantity of albumin stated on the label.

CHARACTERS

Appearance: clear, colourless or pale yellow solution.

Half-life and nature of radiation of technetium-99m: see general chapter *5.7. Table of physical characteristics of radionuclides*.

IDENTIFICATION

A. Gamma-ray spectrometry.

Result: the most prominent gamma photon of technetium-99m has an energy of 0.141 MeV.

B. Using a suitable range of species-specific antisera, carry out precipitation tests on the preparation to be examined. The test is to be carried out using antisera specific to the plasma proteins of each species of domestic animal currently used in the preparation of materials of biological origin in the country concerned. The preparation is shown to contain proteins of human origin and gives negative results with antisera specific to plasma proteins of other species.

C. Examine by a suitable immunoelectrophoresis technique. Using antiserum to normal human serum, compare normal human serum and the preparation to be examined, both diluted if necessary. The main component of the preparation to be examined corresponds to the main component of the normal human serum. The diluted preparation may show the presence of small quantities of other plasma proteins.

TESTS

pH (*2.2.3*): 2.0 to 6.5.

Albumin

Test solution. The preparation to be examined.

Reference solution. Dilute *human albumin solution R* with a 9 g/L solution of *sodium chloride R* to a concentration of 5 mg of albumin per millilitre.

To 1.0 mL of the test solution and to 1.0 mL of the reference solution add 4.0 mL of *biuret reagent R* and mix. After exactly 30 min, measure the absorbance (*2.2.25*) of each solution at 540 nm, using as the compensation liquid a 9 g/L solution of *sodium chloride R* treated in the same manner. From the absorbances measured, calculate the content of albumin in the preparation to be examined in milligrams per millilitre.

Tin: maximum 1 mg/mL.

Test solution. To 1.0 mL of the preparation to be examined add 1.0 mL of a 206 g/L solution of *hydrochloric acid R*. Heat in a water-bath at 100 °C for 30 min. Cool and centrifuge at 300 *g* for 10 min. Dilute 1.0 mL of the supernatant to 10 mL with a 103 g/L solution of *hydrochloric acid R*.

Reference solution. Dissolve 95 mg of *stannous chloride R* in a 103 g/L solution of *hydrochloric acid R* and dilute to 1000.0 mL with the same acid.

To 1.0 mL of each solution add 0.05 mL of *thioglycollic acid R*, 0.1 mL of *dithiol reagent R*, 0.4 mL of a 20 g/L solution of *sodium laurilsulfate R* and 3.0 mL of a 21 g/L solution of *hydrochloric acid R*. Mix. Measure the absorbance (*2.2.25*) of

each solution at 540 nm, using a 21 g/L solution of *hydrochloric acid R* as the compensation liquid. The absorbance of the test solution is not greater than that of the reference solution.

Physiological distribution. Inject a volume not greater than 0.5 mL and containing not more than 1.0 mg of albumin into a suitable vein such as a caudal vein or a saphenous vein of each of 3 male rats, each weighing 150-250 g. Measure the radioactivity in the syringe before and after the injection. Euthanise the rats 30 min after the injection. Take 1 ml of blood by a suitable method and remove the liver and, if a caudal vein has been used for the injection, the tail. Using a suitable instrument determine the radioactivity in these organs and blood. Determine the percentage of radioactivity in the liver and in 1 mL of blood with respect to the total radioactivity calculated as the difference between both measurements made on the syringe minus the activity in the tail (if a caudal vein has been used for the injection). Correct the blood radioactivity by multiplying by a factor of *m*/200 where *m* is the body mass of the rat in grams. In not fewer than 2 of the 3 rats used, the radioactivity in the liver is not more than 15 per cent and that in blood, after correction, is not less than 3.5 per cent.

Sterility. It complies with the test for sterility prescribed in the monograph *Radiopharmaceutical preparations (0125)*. The preparation may be released for use before completion of the test.

Bacterial endotoxins (*2.6.14*): less than 175/*V* IU/mL, *V* being the maximum recommended dose in millilitres.

RADIOCHEMICAL PURITY

Impurity A. Thin-layer chromatography (*2.2.27*).

Test solution. The preparation to be examined.

Plate: *TLC silica gel plate R*; use silica gel as the coating substance on a glass-fibre sheet, heated at 110 °C for 10 min.

Mobile phase: *methyl ethyl ketone R*.

Application: 5-10 µL and allow to dry.

Development: over a path of 10-15 cm in about 10 min.

Drying: in air.

Detection: suitable detector to determine the distribution of radioactivity.

Retardation factors: [^{99m}Tc]technetium human albumin = 0.0 to 0.1; impurity A = 0.9 to 1.0.

Limit:

- *impurity A*: maximum 5.0 per cent of the total radioactivity due to technetium-99m.

[^{99m}Tc]Technetium albumin fractions II to V. Size-exclusion chromatography (*2.2.30*).

Mobile phase (concentrated). Dissolve 1.124 g of *potassium dihydrogen phosphate R*, 4.210 g of *disodium hydrogen phosphate R*, 1.17 g of *sodium chloride R* and 0.10 g of *sodium azide R* in *water R* and dilute to 100 mL with the same solvent.

Test solution. Mix 0.25 mL of the preparation to be examined with 0.25 mL of the mobile phase (concentrated). *Use immediately after dilution.*

Column:

- *size*: *l* = 0.6 m, Ø = 7.5 mm;
- *stationary phase*: *silica gel for size-exclusion chromatography R*.

Mobile phase: mobile phase (concentrated), *water R* (50:50 *V*/*V*).

Flow rate: 0.6 mL/min.

Detection: radioactivity detector set for technetium-99m.

Injection: 200 µL.

Run time: at least 10 min after background level is reached.

Retention times of eluted peaks:

I	High molecular mass compound	19-20 min
II	Poly III-albumin	23-24 min
III	Poly II-albumin	25-27 min
IV	Poly I-albumin	28-29 min
V	Human serum albumin	32-33 min
VI	Tin colloid	40-47 min
VII	Pertechnetate	48 min

Limit:

- *[^{99m}Tc]technetium albumin fractions II to V*: minimum 80 per cent of the radioactivity due to technetium-99m applied to the column.

RADIOACTIVITY

Determine the radioactivity using a calibrated instrument.

LABELLING

The label states:

- the amount of albumin;
- the amount of tin, if any.

IMPURITIES

A. [^{99m}Tc]pertechnetate ion.

01/2009:0296
corrected 7.4

TECHNETIUM (^{99m}Tc) MACROSALB INJECTION

Technetii (^{99m}Tc) macrosalbi suspensio iniectabilis

DEFINITION

Sterile suspension of human albumin in the form of irregular insoluble aggregates obtained by denaturing human albumin in aqueous solution. It is prepared using *Sodium pertechnetate (^{99m}Tc) injection (fission) (0124)* or *Sodium pertechnetate (^{99m}Tc) injection (non fission) (0283)*. The particles are labelled with technetium-99m and have a typical diameter between 10 µm and 100 µm. The injection contains reducing substances, such as tin salts; it may contain a suitable buffer such as acetate, citrate or phosphate buffer and also non-denatured human albumin and an antimicrobial preservative such as benzyl alcohol.

The human albumin employed complies with the requirements prescribed in the monograph *Human albumin solution (0255)*.

Technetium-99m: 90 per cent to 110 per cent of the declared technetium-99m radioactivity at the date and time stated on the label.

Specific radioactivity: minimum 37 MBq of technetium-99m per milligram of aggregated albumin at the date and time of administration.

CHARACTERS

Appearance: white suspension which may separate on standing.

Half-life and nature of radiation of technetium-99m: see general chapter *5.7. Table of physical characteristics of radionuclides.*

IDENTIFICATION

A. Gamma-ray spectrometry.
   Result: the most prominent gamma photon of technetium-99m has an energy of 0.141 MeV.

B. The tests for non-filterable radioactivity and particle size contribute to the identification of the preparation (see Tests).

C. Transfer 1 mL of the preparation to be examined to a centrifuge tube and centrifuge at 2500 *g* for 5-10 min. Decant the supernatant. To the residue add 5 mL of *cupri-tartaric solution R2*, mix and allow to stand for 10 min. If necessary, heat to dissolve the particles and allow to cool. Add rapidly 0.5 mL of *dilute phosphomolybdotungstic reagent R*, mixing immediately. A blue colour develops.

TESTS

pH (*2.2.3*): 3.8 to 7.5.

Non-filterable radioactivity: minimum 90 per cent of the total radioactivity.

Use a polycarbonate membrane filter 13-25 mm in diameter, 10 µm thick and with circular pores 3 µm in diameter. Fit the membrane into a suitable holder. Place 0.2 mL of the preparation to be examined on the membrane and filter, adding 20 mL of a 9 g/L solution of *sodium chloride R* during the filtration. Determine the radioactivity remaining on the membrane.

Particle size: not more than 10 particles have a maximum dimension greater than 100 µm and no particle having a maximum dimension greater than 150 µm is present.

Examine using a microscope. Dilute the preparation to be examined if necessary so that the number of particles is just low enough for individual particles to be distinguished. Using a syringe fitted with a needle having a calibre not less than 0.35 mm, place a suitable volume in a suitable counting chamber such as a haemocytometer cell, taking care not to overfill the chamber. Allow the preparation to be examined to settle for 1 min and, carefully add a cover slide without squeezing the sample. Scan an area corresponding to at least 5000 particles.

Aggregated albumin

Test solution. Transfer a volume of the preparation to be examined containing about 1 mg of aggregated albumin to a centrifuge tube and centrifuge at about 2500 *g* for 5-10 min. Decant the supernatant. Resuspend the residue in 2.0 mL of a 9 g/L solution of *sodium chloride R*. Centrifuge at 2500 *g* for 5-10 min. Decant the supernatant. Resuspend the residue in 5.0 mL of *sodium carbonate solution R1*. Heat in a water-bath at 80-90 °C to dissolve the aggregated albumin. Allow to cool, transfer to a volumetric flask and dilute to 10.0 mL with *sodium carbonate solution R1*.

Reference solutions. Prepare a range of solutions containing 0.05-0.2 mg of human albumin per millilitre by diluting *human albumin solution R* with *sodium carbonate solution R1*.

Introduce 3.0 mL of each solution separately into 25 mL flasks. To each flask add 15.0 mL of *cupri-tartaric solution R2*, mix and allow to stand for 10 min. Add rapidly 1.5 mL of *dilute phosphomolybdotungstic reagent R* and mix immediately. Allow to stand for 30 min and measure the absorbance (*2.2.25*) of each solution at 750 nm using *sodium carbonate solution R1* as the compensation liquid. Using the absorbances obtained with the reference solutions, draw a calibration curve and calculate the content of aggregated albumin in the preparation to be examined.

Tin: maximum 3 mg/mL.

Test solution. To 1.0 mL of the preparation to be examined, add 1.0 mL of a 206 g/L solution of *hydrochloric acid R*. Heat in a water-bath for 30 min. Cool and centrifuge for 10 min at 300 *g*. Dilute 1.0 mL of the supernatant to 25.0 mL with a 103 g/L solution of *hydrochloric acid R*.

Reference solution. Dissolve 0.115 g of *stannous chloride R* in a 103 g/L solution of *hydrochloric acid R* and dilute to 1000.0 mL with the same acid.

To 1.0 mL of each solution, add 0.05 mL of *thioglycollic acid R*, 0.1 mL of *dithiol reagent R*, 0.4 mL of a 20 g/L solution of *sodium laurilsulfate R* and 3.0 mL of a 21 g/L solution of *hydrochloric acid R*. Mix. Measure the absorbance (*2.2.25*) of each solution at 540 nm, using a 21 g/L solution of *hydrochloric acid R* as the compensation liquid. The absorbance of the test solution is not greater than that of the reference solution.

Physiological distribution. Inject a volume not greater than 0.2 mL into a caudal vein of each of 3 rats weighing 150-250 g. Euthanise the rats 15 min after the injection, remove the liver, the spleen and the lungs and measure the radioactivity in the organs using a suitable instrument. Measure the radioactivity in the rest of the body, including the blood, after having removed the tail. Determine the percentage of radioactivity in the lungs, the liver and the spleen from the following expression:

$$\frac{A}{B} \times 100$$

A = radioactivity of the organ concerned;

B = total radioactivity in the liver, the spleen, the lungs and the rest of the body.

In not fewer than 2 of the 3 rats used, at least 80 per cent of the radioactivity is found in the lungs and not more than a total of 5 per cent in the liver and spleen. The preparation may be released for use before completion of the test.

Sterility. It complies with the test for sterility prescribed in the monograph *Radiopharmaceutical preparations (0125)*. The preparation may be released for use before completion of the test.

Bacterial endotoxins (*2.6.14*): less than 175/*V* IU/mL, *V* being the maximum recommended dose in millilitres.

RADIOACTIVITY

Determine the radioactivity using a calibrated instrument.

LABELLING

The label states:

- the concentration of tin expressed in milligrams per millilitre, if any;
- that the preparation is to be shaken before use;
- that the preparation is not to be used if after shaking, the suspension does not appear homogeneous.

01/2009:2393

TECHNETIUM (^{99m}Tc) MEBROFENIN INJECTION

Technetii (^{99m}Tc) mebrofenini solutio iniectabilis

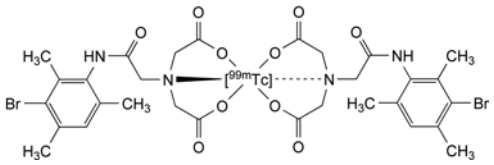

DEFINITION

Sterile solution of a complex of technetium-99m with mebrofenin. It may contain stabilisers and inert additives.

Content: 90 per cent to 110 per cent of the declared technetium-99m radioactivity at the date and time stated on the label.

PRODUCTION

It is prepared by dissolving [[[(3-bromo-2,4,6-trimethylphenyl)carbamoyl]methyl]imino]diacetic acid (mebrofenin) in the presence of a reducing agent such as a stannous salt in *Sodium pertechnetate (^{99m}Tc) injection (fission) (0124)* or *Sodium pertechnetate (^{99m}Tc) injection (non-fission) (0283)*.

Radiopharmaceutical preparations

CHARACTERS

Appearance: clear, colourless solution.

Half-life and nature of radiation of technetium-99m: see general chapter *5.7. Table of physical characteristics of radionuclides.*

IDENTIFICATION

A. Gamma-ray spectrometry.

Results: the most prominent gamma photon of technetium-99m has an energy of 0.141 MeV.

B. Examine the chromatogram obtained in the test for other radiochemical impurities (see Tests).

Results: the principal peak in the chromatogram obtained with the test solution is similar in retention time to the peak due to technetium-99m mebrofenin in the chromatogram obtained with the reference solution.

TESTS

pH (*2.2.3*): 4.0 to 7.5.

Sterility. It complies with the test for sterility prescribed in the monograph on *Radiopharmaceutical preparations (0125)*. The injection may be released for use before completion of the test.

Bacterial endotoxins (*2.6.14*): less than 175/V IU/mL, V being the maximum recommended dose in millilitres.

RADIOCHEMICAL PURITY

Impurity A. Thin-layer chromatography (*2.2.27*).

Test solution. The preparation to be examined.

Reference solution (a). To 1 mL of a 1 g/L solution of *stannous chloride R* in *0.05 M hydrochloric acid* in a closed vial, add 2 mL of sodium pertechnetate (^{99m}Tc) injection (fission or non-fission). Use within 30 min after preparation.

Reference solution (b). Dissolve 40 mg of *mebrofenin CRS* in 2 mL of *water R* and adjust to pH 6.5 with a 40 g/L solution of *sodium hydroxide R*. To this solution add 25 µL of a 20 mg/mL solution of *stannous chloride R* in *0.05 M hydrochloric acid* and 400 MBq of sodium pertechnetate (^{99}Tc) injection (fission or non-fission) in a volume of 2 mL. Allow to stand for 15 min.

Plate: *TLC silica gel plate R*; use a glass-fibre plate.

Mobile phase: *water R*, *acetonitrile R* (40:60 *V/V*).

Application: about 5 µL.

Development: immediately, over 4/5 of the plate.

Drying: in air.

Detection: determine the distribution of radioactivity using a suitable detector.

Retardation factor: impurity A = 0 to 0.1.

System suitability: the retardation factor of the principal peak in the chromatogram obtained with reference solution (a) is not more than 0.1. The retardation factor of the principal peak in the chromatogram obtained with reference solution (b) is more than 0.7.

Other radiochemical impurities. Liquid chromatography (*2.2.29*).

Test solution. The preparation to be examined.

Reference solution. Use reference solution (b) of the test for impurity A.

Column:

- *size*: *l* = 0.25 m, Ø = 4.0 mm;
- *stationary phase*: *end-capped octadecylsilyl silica gel for chromatography with polar incorporated groups R* (5 µm).

Mobile phase A: 3.85 g/L solution of *ammonium acetate R*.

Mobile phase B: *acetonitrile R*.

Time (min)	Mobile phase A (per cent *V/V*)	Mobile phase B (per cent *V/V*)
0 - 20	70	30
20 - 25	70 → 0	30 → 100
25 - 30	0	100

Flow rate: 1.0 mL/min.

Detection: radioactivity detector.

Injection: 20 µL.

Relative retention with reference to technetium-99m mebrofenin (retention time = about 20 min): impurity B = about 0.17.

Limits:

- *technetium-99m mebrofenin*: minimum 94 per cent of the total radioactivity.

  Calculate the percentage of radioactivity due to technetium-99m mebrofenin using the following expression:

$$(100 - A) \times T$$

A = percentage of radioactivity due to impurity A determined in the test for impurity A under radiochemical purity;

T = proportion of the radioactivity in the peak due to technetium-99m mebrofenin relative to the total eluted radioactivity in the chromatogram obtained with the test solution.

RADIOACTIVITY

Determine the radioactivity using a calibrated instrument.

IMPURITIES

A. technetium-99m in colloidal form,

B. [^{99m}Tc]pertechnetate ion.

01/2008:0641
corrected 7.0

TECHNETIUM (^{99m}Tc) MEDRONATE INJECTION

Technetii (^{99m}Tc) medronati solutio iniectabilis

DEFINITION

Sterile solution of a complex of technetium-99m with sodium medronate. It is prepared using *Sodium pertechnetate (^{99m}Tc) injection (fission) (0124)* or *Sodium pertechnetate (^{99m}Tc) injection (non fission) (0283)*. The injection may contain antimicrobial preservatives, antioxidants, stabilisers and buffers.

Technetium-99m: 90 per cent to 110 per cent of the declared technetium-99m radioactivity at the date and time stated on the label.

CHARACTERS

Appearance: clear, colourless solution.

Half-life and nature of radiation of technetium-99m: see general chapter *5.7. Table of physical characteristics of radionuclides.*

IDENTIFICATION

A. Gamma-ray spectrometry.

Result: the most prominent gamma photon of technetium-99m has an energy of 0.141 MeV.

B. Examine the chromatograms obtained in tests A and B for radiochemical purity (see Tests).

Results:

- the retardation factor of the principal peak in the radiochromatogram obtained with the test solution in test A is 0.9 to 1.0;
- the retardation factor of the principal peak in the radiochromatogram obtained with the test solution in test B is 0.0 to 0.1.

C. Thin-layer chromatography (*2.2.27*).

Test solution. Dilute the preparation to be examined with *water R* to obtain a solution containing about 0.1-0.5 mg/mL of sodium medronate.

Reference solution. Dissolve a suitable quantity (1-5 mg) of *medronic acid CRS* in a suitable mixture of a 9.0 g/L solution of *sodium chloride R* and *water R* and dilute to 10 mL with the same solvent mixture so as to obtain a solution similar to the test solution with regard to sodium medronate and sodium chloride concentrations.

Plate: *cellulose for chromatography R* as the coating substance.

Mobile phase: *2-propanol R*, *1 M hydrochloric acid*, *methyl ethyl ketone R* (20:30:60 *V/V/V*).

Application: 10 µL.

Development: over a path of 12-14 cm in about 4 h.

Drying: in air.

Detection: spray with *ammonium molybdate solution R4*, then expose to ultraviolet light at 254 nm for about 10 min.

Results: the principal spot in the chromatogram obtained with the test solution is similar in position and colour to the spot in the chromatogram obtained with the reference solution.

TESTS

pH (*2.2.3*): 3.5 to 7.5.

Tin: maximum 3 mg/mL.

Test solution. Dilute 1.0 mL of the preparation to be examined to 50.0 mL with a 103 g/L solution of *hydrochloric acid R*.

Reference solution. Dissolve 0.115 g of *stannous chloride R* in a 103 g/L solution of *hydrochloric acid R* and dilute to 1000.0 mL with the same acid.

To 1.0 mL of each solution add 0.05 mL of *thioglycollic acid R*, 0.1 mL of *dithiol reagent R*, 0.4 mL of a 20 g/L solution of *sodium laurilsulfate R* and 3.0 mL of a 21 g/L solution of *hydrochloric acid R*. Mix. Measure the absorbance (*2.2.25*) of each solution at 540 nm, using a 21 g/L solution of *hydrochloric acid R* as compensation liquid. The absorbance of the test solution is not greater than that of the reference solution.

Physiological distribution. Inject a volume not greater than 0.2 mL, equivalent to not more than 0.05 mg of sodium medronate, into a suitable vein such as a caudal vein or the saphenous vein of each of 3 rats, each weighing 150-250 g. Measure the radioactivity in the syringe before and after injection. Euthanise the rats 2 h after the injection. Remove 1 femur, the liver, and some blood. Weigh the blood. Remove the tail if a caudal vein has been used for the injection. Using a suitable instrument measure the radioactivity in the femur, liver and blood, and in the tail if a caudal vein has been used for the injection. Determine the percentage of radioactivity in each sample using the following expression:

$$\frac{A}{B} \times 100$$

A = radioactivity of the sample concerned;

B = total radioactivity, which is equal to the difference between the 2 measurements made on the syringe minus the radioactivity in the tail if a caudal vein has been used for the injection.

Calculate the radioactivity per unit mass in the blood. Correct the blood concentration by multiplying by a factor *m*/200 where *m* is the body mass of the rat in grams.

In not fewer than 2 of the 3 rats used, the radioactivity is:

- *in the liver*: maximum 1.0 per cent;
- *in the femur*: minimum 1.5 per cent;
- *in the blood after correction*: maximum 0.05 per cent per gram.

Sterility. It complies with the test for sterility prescribed in the monograph *Radiopharmaceutical preparations (0125)*. The preparation may be released for use before completion of the test.

RADIOCHEMICAL PURITY

A. Impurity A. Thin-layer chromatography (*2.2.27*).

Test solution. The preparation to be examined.

Plate: *TLC silica gel plate R*; use silica gel as the coating substance on a glass-fibre sheet.

Mobile phase: 136 g/L solution of *sodium acetate R*.

Application: 5-10 µL.

Development: immediately, over a path of 10-15 cm in about 10 min.

Drying: in air.

Detection: suitable detector to determine the distribution of radioactivity.

Retardation factors: impurity A = 0.0 to 0.1; [^{99m}Tc]technetium medronate and impurity B = 0.9 to 1.0.

B. Impurity B. Thin-layer chromatography (*2.2.27*).

Test solution. The preparation to be examined.

Plate: *TLC silica gel plate R*; use silica gel as the coating substance on a glass-fibre sheet.

Mobile phase: *methyl ethyl ketone R*.

Application: 5-10 µL; dry quickly.

Development: over a path of 10-15 cm in about 10 min.

Drying: in air.

Detection: suitable detector to determine the distribution of radioactivity.

Retardation factors: [^{99m}Tc]technetium medronate and impurity A = 0.0 to 0.1; impurity B = 0.9 to 1.0.

Limits:

- *impurity B*: maximum 2.0 per cent of the radioactivity due to technetium-99m in the chromatogram obtained in test B;
- *sum of impurities A and B*: maximum 5.0 per cent of the radioactivity due to technetium-99m in the chromatograms obtained in tests A and B.

RADIOACTIVITY

Determine the radioactivity using a calibrated instrument.

IMPURITIES

A. [^{99m}Tc]technetium in colloidal form;

B. [^{99m}Tc]pertechnetate ion.

01/2008:1372
corrected 7.0

TECHNETIUM (^{99m}Tc) MERTIATIDE INJECTION

Technetii (^{99m}Tc) mertiatidi solutio iniectabilis

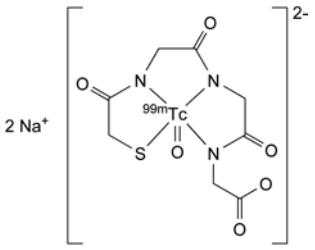

DEFINITION

Sterile solution of disodium oxo[*N*-[*N*-(sulfanylacetyl)-glycyl]glycyl]glycynato(5-)-κ^4*N*,*N′*,*N″*,*S*][^{99m}Tc]technetate(V). It may be prepared by either heating a mixture containing *S*-benzoylmercaptoacetyltriglycine (betiatide), a weak chelating agent such as tartrate, a stannous salt and *Sodium pertechnetate (^{99m}Tc) injection fission (0124)* or *Sodium pertechnetate (^{99m}Tc) injection non-fission (0283)*, or by mixing solutions of mercaptoacetyltriglycine (mertiatide), a stannous salt and *Sodium pertechnetate (^{99m}Tc) injection fission (0124)* or *Sodium pertechnetate (^{99m}Tc) injection non-fission (0283)* at alkaline pH. It may contain stabilisers and a buffer.

Technetium-99m: 90 per cent to 110 per cent of the declared technetium-99m radioactivity at the date and time stated on the label.

CHARACTERS

Appearance: clear, colourless solution.

Half-life and nature of radiation of technetium-99m: see general chapter *5.7. Table of physical characteristics of radionuclides*.

IDENTIFICATION

A. Gamma-ray spectrometry.

Result: the most prominent gamma photon of technetium-99m has an energy of 0.141 MeV.

B. Examine the chromatograms obtained in the test of other radiochemical impurities in the section Radiochemical purity (see Tests).

Result: the principal peak in the radiochromatogram obtained with the test solution is similar in retention time to the principal peak in the chromatogram obtained with the reference solution.

TESTS

pH (*2.2.3*): 5.0 to 7.5.

Sterility. It complies with the test for sterility prescribed in the monograph *Radiopharmaceutical preparations (0125)*. The preparation may be released for use before completion of the test.

RADIOCHEMICAL PURITY

Impurity A. Ascending paper chromatography (*2.2.26*).

Test solution. The preparation to be examined.

Paper: *paper for chromatography R*.

Mobile phase: *water R*, *acetonitrile R* (40:60 *V/V*).

Application: 2 µL.

Development: over a path of 15 cm.

Drying: in air.

Detection: suitable detector to determine the distribution of radioactivity.

Retardation factor: impurity A = 0.0-0.1.

Limit:

– *impurity A*: maximum 2.0 per cent of the total radioactivity.

Other radiochemical impurities. Liquid chromatography (*2.2.29*).

Test solution. The preparation to be examined.

Reference solution. Dissolve with heating on a water-bath 5 mg of *S-benzylmercaptoacetyltriglycine CRS* in 5 mL of *water R*. To 1 mL of this solution in a closed vial filled with *nitrogen R*, add 0.5 mL of a 40 g/L solution of *sodium potassium tartrate R*, 25 µL of a 4 g/L solution of *stannous chloride R* in a 5 g/L solution of *hydrochloric acid R* and 370-740 MBq of sodium pertechnetate (^{99m}Tc) injection (fission or non-fission) in a volume not exceeding 3 mL. Heat the mixture on a water-bath for 10 min and allow to cool to room temperature.

Column:

– *size*: *l* = 0.25 m, Ø = 4.0 mm;

– *stationary phase*: *octadecylsilyl silica gel for chromatography R* (5 µm).

Mobile phase A: mix 7 volumes of *anhydrous ethanol R* with 93 volumes of a 1.36 g/L solution of *potassium dihydrogen phosphate R*, adjusted to pH 6.0 with a 4 g/L solution of *sodium hydroxide R*.

Mobile phase B: *water R*, *methanol R* (10:90 *V/V*).

Time (min)	Mobile phase A (per cent *V/V*)	Mobile phase B (per cent *V/V*)
0 - 10	100	0
10 - 25	0	100

Flow rate: 1.0 mL/min.

Detection: suitable detector to determine the distribution of radioactivity.

Equilibration: with mobile phase A for 20 min.

Injection: 20 µL.

Limits:

– *sum of the areas preceding the principal peak (corresponding to hydrophilic impurities, including impurity B)*: maximum 3.0 per cent of the sum of the areas of all peaks in the chromatogram obtained with the test solution;

– *sum of the peaks following the principal peak (corresponding to lipophilic impurities)*: maximum 4.0 per cent of the sum of the area of all peaks in the chromatogram obtained with the test solution;

– *[^{99m}Tc]technetium mertiatide*: minimum 94 per cent of the radioactivity due to technetium-99m.

RADIOACTIVITY

Determine the radioactivity using a calibrated instrument.

IMPURITIES

A. [^{99m}Tc]technetium in colloidal form,

B. [^{99m}Tc]pertechnetate ion.

01/2009:0570
corrected 7.0

TECHNETIUM (^{99m}Tc) MICROSPHERES INJECTION

Technetii (^{99m}Tc) microsphaerarum suspensio iniectabilis

DEFINITION

Sterile suspension of human albumin which has been denatured to form spherical insoluble particles. The particles are labelled with technetium-99m and have a typical diameter of 10-50 µm. It is prepared using *Sodium pertechnetate (^{99m}Tc) injection (fission) (0124)* or *Sodium pertechnetate (^{99m}Tc) injection (non fission) (0283)*. The injection contains reducing substances, such as tin salts. It may contain a suitable buffer such as acetate, citrate or phosphate and additives such as wetting agents.

The human albumin used complies with the requirements of the monograph *Human albumin solution (0255)*.

Technetium-99m: 90 per cent to 110 per cent of the declared technetium-99m radioactivity at the date and time stated on the label.

Radioactivity: minimum 185 MBq of technetium-99m per million particles at the date and time of administration.

CHARACTERS

Appearance: suspension of white, yellow or artificially coloured particles which may separate on standing.

Half-life and nature of radiation of technetium-99m: see general chapter *5.7. Table of physical characteristics of radionuclides*.

IDENTIFICATION

A. Gamma-ray spectrometry.

   Result: the most prominent gamma photon of technetium-99m has an energy of 0.141 MeV.

B. The tests for non-filterable radioactivity and particle size (see Tests) contribute to the identification of the preparation.

C. Transfer 1 mL of the preparation to be examined to a centrifuge tube and centrifuge at 2500 *g* for 5-10 min. Decant the supernatant. To the residue add 5 mL of *cupri-tartaric solution R2*, mix and allow to stand for 10 min. If necessary, heat to dissolve the particles and allow to cool. Add rapidly 0.5 mL of *dilute phosphomolybdotungstic reagent R*, mix immediately. A blue colour develops.

TESTS

pH (*2.2.3*): 4.0 to 9.0.

Non-filterable radioactivity: minimum 95 per cent of the total radioactivity.

Use a polycarbonate membrane filter 13-25 mm in diameter, 10 µm thick and with circular pores 3 µm in diameter. Fit the membrane into a suitable holder. Place 0.2 mL of the preparation to be examined on the membrane and filter, adding 20 mL of a 9 g/L solution of *sodium chloride R* during the filtration. Determine the radioactivity remaining on the membrane.

Particle size: maximum 10 particles have a maximum dimension greater than 75 µm but no particle have a maximum dimension greater than 100 µm.

Examine using a microscope. Dilute the preparation if necessary so that the number of particles is just low enough for individual particles to be distinguished. Using a syringe fitted with a needle having a calibre not less than 0.35 mm, place a suitable volume in a suitable counting chamber such as a haemocytometer cell, taking care not to overfill the chamber. Allow the suspension to settle for 1 min and carefully add a cover slide without squeezing the sample. Scan an area corresponding to at least 5000 particles. The particles have a uniform spherical appearance.

Number of particles. Examine using a microscope. Fill a suitable counting chamber such as a haemocytometer cell with a suitable dilution of the preparation taking care that particles do not separate during the transfer. Count the number of particles in the chamber. Repeat this procedure twice and calculate the number of particles per millilitre of the preparation to be examined.

Tin: maximum 3 mg/mL.

Test solution. To 1.0 mL of the preparation to be examined add 0.5 mL of *sulfuric acid R* and 1.5 mL of *nitric acid R*. Heat and evaporate to approximately 1 mL. Add 2 mL of *water R* and evaporate again to approximately 1 mL. Repeat this procedure twice, cool and dilute to 25.0 mL with a 103 g/L solution of *hydrochloric acid R*.

Reference solution. Dissolve 0.115 g of *stannous chloride R* in a 103 g/L solution of *hydrochloric acid R* and dilute to 1000.0 mL with the same acid.

To 1.0 mL of each solution add 0.4 mL of a 20 g/L solution of *sodium laurilsulfate R*, 0.05 mL of *thioglycollic acid R*, 0.1 mL of *dithiol reagent R* and 3.0 mL of a 21 g/L solution of *hydrochloric acid R*. Mix. Measure the absorbance (*2.2.25*) of each solution at 540 nm, using a 21 g/L solution of *hydrochloric acid R* as the compensation liquid. The absorbance of the test solution is not greater than that of the reference solution.

Physiological distribution. Inject a volume not greater than 0.2 mL into a caudal vein of each of 3 rats weighing 150-250 g. Euthanise the rats 15 min after the injection, remove the liver, the spleen and the lungs and measure the radioactivity in these organs using a suitable instrument. Measure the radioactivity in the rest of the body, including the blood and voided urine, after having removed the tail. Determine the percentage of radioactivity in the liver, the spleen and the lungs, using the following expression:

$$\frac{A}{B} \times 100$$

A = radioactivity of the organ concerned;

B = total radioactivity in the liver, the spleen, the lungs and the rest of the body, including voided urine.

In not fewer than 2 of the 3 rats used, not less than 80 per cent of the radioactivity is found in the lungs and not more than a total of 5 per cent in the liver and spleen. The preparation may be released for use before completion of the test.

Sterility. It complies with the test for sterility prescribed in the monograph *Radiopharmaceutical preparations (0125)*. The preparation may be released for use before completion of the test.

Bacterial endotoxins (*2.6.14*): less than 175/*V* IU/mL, *V* being the maximum recommended dose in millilitres.

RADIOACTIVITY

Determine the radioactivity using a calibrated instrument.

LABELLING

The label states:

- the concentration of tin expressed in milligrams per millilitre, if any,
- that the preparation is to be shaken before use.

01/2008:0642
corrected 7.0

TECHNETIUM (^{99m}Tc) PENTETATE INJECTION

Technetii (^{99m}Tc) pentetatis solutio iniectabilis

DEFINITION

Sterile solution of a complex of technetium-99m with sodium pentetate or calcium trisodium pentetate. It is prepared using *Sodium pertechnetate (^{99m}Tc) injection (fission) (0124)* or *Sodium pertechnetate (^{99m}Tc) injection (non fission) (0283)*. It may contain suitable antimicrobial preservatives, antioxidants, stabilisers and buffers.

Technetium-99m: 90 per cent to 110 per cent of the declared technetium-99m radioactivity at the date and time stated on the label.

CHARACTERS

Appearance: clear, colourless or slightly yellow solution.
Half-life and nature of radiation of technetium-99m: see general chapter *5.7. Table of physical characteristics of radionuclides*.

IDENTIFICATION

A. Gamma-ray spectrometry.

Result: the most prominent gamma photon of technetium-99m has an energy of 0.141 MeV.

B. Examine the chromatograms obtained in tests A and B for radiochemical purity (see Tests).

Results:

- the retardation factor of the principal peak in the radiochromatogram obtained with the test solution in test A is 0.9 to 1.0;
- the retardation factor of the principal peak in the radiochromatogram obtained with the test solution in test B is 0.0 to 0.1.

C. *Test solution*. In a clean, dry, 10 mL glass tube, place a volume of the preparation to be examined containing 2 mg of pentetate. Dilute, if necessary, to 1 mL with *water R*.

Reference solution. In a clean, dry, 10 mL glass tube, place 1 mL of *water R*.

To each tube add 0.1 mL of a 1 g/L solution of *nickel sulfate R*, 0.5 mL of a 50 per cent *V/V* solution of *glacial acetic acid R* and 0.75 mL of a 50 g/L solution of *sodium hydroxide R*. Mix and check that the pH is not above 5. To each tube add 0.1 mL of a 10 g/L solution of *dimethylglyoxime R* in *ethanol (96 per cent) R*. Mix and allow to stand for 2 min. Adjust the pH in each tube to not less than 12 by adding a 100 g/L solution of *sodium hydroxide R*. Mix and check that the pH is not below 12. Allow to stand for 2 min. Heat the tubes gently on a water-bath for 2 min.

Results:

- the test solution remains clear and colourless throughout;
- the reference solution becomes red on addition of dimethylglyoxime solution and a red precipitate is formed when the tube is heated on the water-bath.

TESTS

pH (*2.2.3*): 4.0 to 7.5.

Tin: maximum 1 mg/mL.

Test solution. Dilute 1.5 mL of the preparation to be examined to 25.0 mL with a 103 g/L solution of *hydrochloric acid R*.

Reference solution. Dissolve 0.115 g of *stannous chloride R* in a 103 g/L solution of *hydrochloric acid R* and dilute to 1000.0 mL with the same acid.

To 1.0 mL of each solution add 0.05 mL of *thioglycollic acid R*, 0.1 mL of *dithiol reagent R*, 0.4 mL of a 20 g/L solution of *sodium laurilsulfate R* and 3.0 mL of a 21 g/L solution of *hydrochloric acid R*. Mix. Measure the absorbance (*2.2.25*) of each solution at 540 nm, using a 21 g/L solution of *hydrochloric acid R* as the compensation liquid. The absorbance of the test solution is not greater than that of the reference solution.

Sterility. It complies with the test for sterility prescribed in the monograph *Radiopharmaceutical preparations (0125)*. The preparation may be released for use before completion of the test.

RADIOCHEMICAL PURITY

A. Impurity A. Thin-layer chromatography (*2.2.27*).

Test solution. The preparation to be examined.

Plate: *TLC silica gel plate R*; use silica gel as the coating substance on a glass-fibre sheet, previously heated at 110 °C for 10 min.

Mobile phase: 9 g/L solution of *sodium chloride R*.

Application: 5-10 µL.

Development: immediately, over a path of 10-15 cm in about 10 min.

Drying: in air.

Detection: suitable detector to determine the distribution of radioactivity.

Retardation factors: impurity A = 0.0 to 0.1; [^{99m}Tc]technetium pentetate and impurity B = 0.9 to 1.0.

B. Impurity B. Thin-layer chromatography (*2.2.27*).

Test solution. The preparation to be examined.

Plate: *TLC silica gel plate R*; use silica gel as the coating substance on a glass-fibre sheet, previously heated at 110 °C for 10 min.

Mobile phase: *methyl ethyl ketone R*.

Application: 5-10 µL; allow to dry.

Development: over a path of 10-15 cm in about 10 min.

Drying: in air.

Detection: suitable detector to determine the distribution of radioactivity.

Retardation factors: [^{99m}Tc]technetium pentetate and impurity A = 0.0 to 0.1; impurity B = 0.9 to 1.0.

Limit:

- *sum of impurities A and B*: maximum 5.0 per cent of the radioactivity due to technetium-99m in the chromatograms obtained in tests A and B.

RADIOACTIVITY

Determine the radioactivity using a calibrated instrument.

IMPURITIES

A. [^{99m}Tc]technetium in colloidal form,

B. [^{99m}Tc]pertechnetate ion.

Radiopharmaceutical preparations

01/2008:1926

TECHNETIUM (^{99m}Tc) SESTAMIBI INJECTION

Technetii (^{99m}Tc) sestamibi solutio iniectabilis

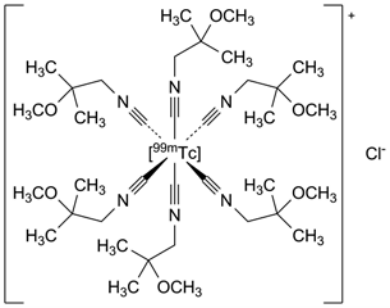

DEFINITION

Sterile solution of (*OC*-6-11)-hexakis[1-(isocyano-κ*C*)-2-methoxy-2-methylpropane][^{99m}Tc]technetium(I) chloride, which may be prepared by heating a mixture containing [tetrakis(2-methoxy-2-methylpropyl-1-isocyanide)copper (1+)] tetrafluoroborate, a weak chelating agent, a stannous salt and *Sodium pertechnetate (^{99m}Tc) injection (fission) (0124)* or *Sodium pertechnetate (^{99m}Tc) injection (non-fission) (0283)*.

Content: 90 per cent to 110 per cent of the declared technetium-99m radioactivity at the date and hour stated on the label.

CHARACTERS

Appearance: clear, colourless solution.

Half-life and nature of radiation of technetium-99m: see general chapter *5.7. Table of physical characteristics of radionuclides*.

IDENTIFICATION

A. Gamma-ray spectrometry.

Results: the spectrum obtained with the solution to be examined does not differ significantly from that of a standardised technetium-99m solution. The most prominent gamma photon has an energy of 0.141 MeV.

B. Examine the chromatograms obtained in the test for impurity C under Radiochemical purity.

Results: the principal peak in the radiochromatogram obtained with the test solution is similar in retention time to the principal peak in the radiochromatogram obtained with the reference solution.

TESTS

pH (*2.2.3*): 5.0 to 6.0.

Sterility. It complies with the test for sterility prescribed in the monograph on *Radiopharmaceutical preparations (0125)*. The injection may be released for use before completion of the test.

RADIOCHEMICAL PURITY

Impurity A and other polar impurities. Thin-layer chromatography (*2.2.27*).

Test solution. The preparation to be examined.

Plate: *TLC octadecylsilyl silica gel plate R*.

Mobile phase: mix 10 volumes of *tetrahydrofuran R*, 20 volumes of a 38.5 g/L solution of *ammonium acetate R*, 30 volumes of *methanol R* and 40 volumes of *acetonitrile R*.

Application: about 5 µL.

Development: immediately over a path of 6 cm.

Drying: in air.

Detection: determine the distribution of radioactivity using a radioactivity detector.

Retardation factors: impurity B and apolar impurities = 0 to 0.1; impurity C and technetium-99m sestamibi = 0.3 to 0.6; impurity A and other polar impurities = 0.9 to 1.0.

Limit: see test for impurity B.

Impurity B. Paper chromatography (*2.2.26*). *If no activity is found at retardation factor 0 to 0.1 in the test for impurity A and other polar impurities, impurity B is absent and the test for impurity B may be omitted.*

Test solution. The preparation to be examined.

Paper: *paper for chromatography R*.

Mobile phase: mix equal volumes of *acetonitrile R*, *0.5 M acetic acid* and a 20 g/L solution of *sodium chloride R*.

Application: about 5 µL.

Development: over a path of 10 cm.

Drying: in air.

Detection: determine the distribution of radioactivity using a radioactivity detector.

Retardation factors: impurity B = 0 to 0.1; impurity A, impurity C and technetium-99m sestamibi = 0.8 to 1.0.

Limit:

- *sum of impurity A and other polar impurities, and impurity B*: maximum 5 per cent of the total radioactivity.

Impurity C. Liquid chromatography (*2.2.29*).

Test solution. The preparation to be examined.

Reference solution. To a vial of *sestamibi labelling kit CRS* add 3 mL of a 9 g/L solution of *sodium chloride R* containing 700 MBq to 900 MBq of sodium pertechnetate (^{99m}Tc) injection (fission or non-fission). Heat the mixture in a water-bath for 10 min and allow to cool to room temperature.

Column:

- *size*: *l* = 0.25 m, Ø = 4.6 mm,
- *stationary phase*: spherical *base-deactivated end-capped octadecylsilyl silica gel for chromatography R* (5 µm).

Mobile phase: mix 20 volumes of *acetonitrile R*, 35 volumes of a 6.6 g/L solution of *ammonium sulfate R* and 45 volumes of *methanol R*.

Flow rate: 1.5 mL/min.

Detection: radioactivity detector.

Injection: 25 µL.

Run time: 25 min.

Relative retention with reference to technetium-99m sestamibi: impurity C = about 1.3.

System suitability: reference solution:

- the chromatogram is similar to the chromatogram provided with *sestamibi labelling kit CRS*,
- *relative retention* with reference to technetium-99m sestamibi: impurity C = minimum 1.2.

Limits:

- *impurity C*: not more than 3 per cent of the total radioactivity,
- *technetium-99m sestamibi*: minimum 94 per cent of the total radioactivity.

Calculate the percentage of radioactivity due to technetium-99m sestamibi from the expression:

$$\frac{(100 - B) \times T}{100}$$

B = percentage of radioactivity due to impurity B determined in the test for impurity B under Radiochemical purity,

T = area of the peak due to technetium-99m sestamibi in the chromatogram obtained with the test solution.

Radiopharmaceutical preparations

RADIOACTIVITY

Determine the radioactivity using a calibrated instrument.

IMPURITIES

A. [^{99m}Tc]O_4^-: (^{99m}Tc)pertechnetate ion,

B. technetium-99m in colloidal form,

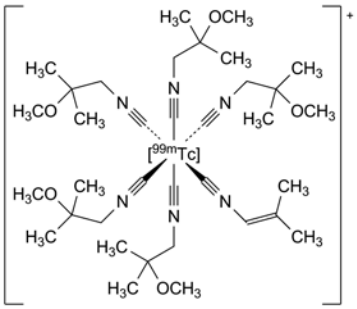

C. (*OC*-6-22)-pentakis[1-(isocyano-κ*C*)-2-methoxy-2-methylpropane][1-(isocyano-κ*C*)-2-methylprop-1-ene][^{99m}Tc]technetium (1+).

01/2008:0643
corrected 7.0

TECHNETIUM (^{99m}Tc) SUCCIMER INJECTION

Technetii (^{99m}Tc) succimeri solutio iniectabilis

DEFINITION

Sterile solution of a complex of technetium-99m with *meso*-2,3-dimercaptosuccinic acid. It is prepared using *Sodium pertechnetate (^{99m}Tc) injection (fission) (0124)* or *Sodium pertechnetate (^{99m}Tc) injection (non fission) (0283)*. It contains a reducing substance, such as tin salt and may contain stabilisers, antioxidants such as ascorbic acid, and inert additives.

Technetium-99m: 90 per cent to 110 per cent of the declared technetium-99m radioactivity at the date and time stated on the label.

CHARACTERS

Appearance: clear, colourless solution.

Half-life and nature of radiation of technetium-99m: see general chapter *5.7. Table of physical characteristics of radionuclides*.

IDENTIFICATION

A. Gamma-ray spectrometry.

Result: the most prominent gamma photon of technetium-99m has an energy of 0.141 MeV.

B. Examine the chromatogram obtained in the test for radiochemical purity (see Tests).

Result: the retardation factor of the principal peak in the radiochromatogram obtained with the test solution is 0.0 to 0.1.

C. Place 1 mL of the preparation to be examined in a test-tube and add 0.1 mL of *glacial acetic acid R* and 1 mL of a 20 g/L solution of *sodium nitroprusside R*. Mix. Carefully place a layer of *concentrated ammonia R* at the top of the solution. A violet ring develops between the layers.

TESTS

pH (*2.2.3*): 2.3 to 3.5.

Tin: maximum 1 mg/mL.

Test solution. Dilute 1.5 mL of the preparation to be examined to 25.0 mL with a 103 g/L solution of *hydrochloric acid R*.

Reference solution. Dissolve 0.115 g of *stannous chloride R* in a 103 g/L solution of *hydrochloric acid R* and dilute to 1000.0 mL with the same solution.

To 1.0 mL of each solution add 0.05 mL of *thioglycollic acid R*, 0.1 mL of *dithiol reagent R*, 0.4 mL of a 20 g/L solution of *sodium laurilsulfate R* and 3.0 mL of a 21 g/L solution of *hydrochloric acid R*. Mix. Allow to stand for 60 min. Measure the absorbance (*2.2.25*) of each solution at 540 nm, using a 21 g/L solution of *hydrochloric acid R* as the compensation liquid. The absorbance of the test solution is not greater than that of the reference solution.

Physiological distribution. Inject a volume not greater than 0.2 mL and containing not more than 0.1 mg of dimercaptosuccinic acid into a suitable vein, such as a caudal vein or a saphenous vein, of each of 3 rats each weighing 150-250 g. Measure the radioactivity in the syringe before and after the injection. Euthanise the rats 1 h after the injection. Remove the kidneys, the liver, the stomach, the lungs and, if a caudal vein has been used for the injection, the tail. Using a suitable instrument determine the radioactivity in these organs. Determine the percentage of radioactivity in each organ with respect to the total radioactivity calculated as the difference between the 2 measurements made on the syringe minus the activity in the tail (if a caudal vein has been used for the injection).

In not fewer than 2 of the 3 rats used, the radioactivity is:

- in the kidneys: minimum 40 per cent;
- in the liver: maximum 10.0 per cent;
- in the lungs: maximum 5.0 per cent;
- in the stomach: maximum 2.0 per cent.

Sterility. It complies with the test for sterility prescribed in the monograph *Radiopharmaceutical preparations (0125)*. The preparation may be released for use before completion of the test.

RADIOCHEMICAL PURITY

Impurity A. Thin-layer chromatography (*2.2.27*).

Test solution. The preparation to be examined.

Plate: *TLC silica gel plate R*; use silica gel plate as the coating substance on a glass-fibre sheet, heated at 110 °C for 10 min.

Mobile phase: *methyl ethyl ketone R*.

Application: 5-10 µL.

Development: immediately, over a path of 10-15 cm in about 10 min.

Drying: in air.

Detection: suitable detector to determine the distribution of radioactivity.

Retardation factors: [^{99m}Tc]technetium succimer = 0.0 to 0.1; impurity A = 0.9 to 1.0.

Limits:

- *[^{99m}Tc]technetium succimer*: minimum 95.0 per cent of the total radioactivity due to technetium-99m;
- *impurity A*: maximum 2.0 per cent of the total radioactivity due to technetium-99m.

RADIOACTIVITY

Determine the radioactivity using a calibrated instrument.

STORAGE

Protected from light.

IMPURITIES

A. [^{99m}Tc]pertechnetate ion.

Radiopharmaceutical preparations

01/2009:0129
corrected 7.0

TECHNETIUM (^{99m}Tc) TIN PYROPHOSPHATE INJECTION

Stanni pyrophosphatis et technetii (^{99m}Tc) solutio iniectabilis

DEFINITION

Sterile solution which may be prepared by mixing solutions of sodium pyrophosphate and stannous chloride with *Sodium pertechnetate (^{99m}Tc) injection (fission) (0124)* or *Sodium pertechnetate (^{99m}Tc) injection (non fission) (0283)*.

Technetium-99m: 90 per cent to 110 per cent of the declared technetium-99m radioactivity at the date and time stated on the label.

Sodium pyrophosphate ($Na_4P_2O_7,10H_2O$): 1 mg/mL to 50 mg/mL.

Tin: maximum 3.0 mg/mL.

CHARACTERS

Appearance: clear, colourless solution.

Half-life and nature of radiation of technetium-99m: see general chapter *5.7. Table of physical characteristics of radionuclides*.

IDENTIFICATION

A. Gamma-ray spectrometry.

Result: the most prominent gamma photon of technetium-99m has an energy of 0.141 MeV.

B. Examine the chromatograms obtained in the tests A and B for radiochemical purity (see Tests).

Results:

– the retardation factor of the principal peak in the radiochromatogram obtained with the test solution in the test A is 0.9 to 1.0,

– the retardation factor of the principal peak in the radiochromatogram obtained with the test solution in the test B is 0.0 to 0.1.

C. To 1 mL add 1 mL of *acetic acid R*. Heat on a water-bath for 1 h. After cooling, add 10 mL of *nitro-molybdovanadic reagent R* and allow to stand for 30 min. A yellow colour develops.

D. To 1 mL add 0.05 mL of *thioglycollic acid R*, 0.1 mL of *dithiol reagent R*, 0.4 mL of a 20 g/L solution of *sodium laurilsulfate R*, 1 mL of *hydrochloric acid R*, 2 mL of a 30 per cent *V/V* solution of *sulfuric acid R* and allow to stand for 30 min. A pink colour develops.

TESTS

pH (*2.2.3*): 6.0 to 7.0.

Sodium pyrophosphate: 1 mg/mL to 50 mg/mL.

Test solution. Use 1 mL of the preparation to be examined or a suitable dilution of it.

Reference solutions. Using a solution containing *sodium pyrophosphate R* and *stannous chloride R* in the same proportions as in the test solution, prepare a range of solutions and dilute to the same final volume with *water R*.

To the test solution and to 1 mL of each of the reference solutions add successively 10 mL of a 1 g/L solution of *disodium hydrogen phosphate R*, 10 mL of *iron standard solution (8 ppm Fe) R*, 5 mL of *glacial acetic acid R* and 5 mL of a 1 g/L solution of *hydroxylamine hydrochloride R*. Dilute each solution to 40 mL with *water R* and heat in a water-bath at 40 °C for 1 h. To each solution, add 4 mL of a 1 g/L solution of *phenanthroline hydrochloride R* and dilute to 50.0 mL with *water R*. Measure the absorbance (*2.2.25*) of each solution at 515 nm using as the compensation liquid a reagent blank containing hydrochloric acid (1.1 g/L HCl) instead of the *iron standard solution (8 ppm Fe) R*. Using the absorbances obtained with each of the reference solutions, draw a calibration curve and calculate the concentration of sodium pyrophosphate in the preparation to be examined.

Tin: maximum 3.0 mg/mL.

Test solution. Use 1 mL of the preparation to be examined or a suitable dilution of it.

Reference solutions. Using a solution in hydrochloric acid (6.2 g/L HCl) containing *sodium pyrophosphate R* and *stannous chloride R* in the same proportions as in the test solution, prepare a range of solutions and dilute to the same final volume with hydrochloric acid (6.2 g/L HCl).

To the test solution and to 1 mL of each of the reference solutions add 0.05 mL of *thioglycollic acid R*, 0.1 mL of *dithiol reagent R*, 0.4 mL of a 20 g/L solution of *sodium laurilsulfate R*, 1 mL of *hydrochloric acid R* and 2 mL of a 300 g/L solution of *sulfuric acid R*, and dilute to 15 mL with hydrochloric acid (6.2 g/L HCl). Allow the solutions to stand for 30 min and measure the absorbance (*2.2.25*) of each solution at 530 nm, using as the compensation liquid a reagent blank containing the same quantity of *sodium pyrophosphate R* as the test solution. Using the absorbances obtained with each of the reference solutions, draw a calibration curve and calculate the concentration of tin in the preparation to be examined.

Sterility. It complies with the test for sterility prescribed in the monograph *Radiopharmaceutical preparations (0125)*. The preparation may be released for use before completion of the test.

Bacterial endotoxins (*2.6.14*): less than 175/*V* IU/mL, *V* being the maximum recommended dose in millilitres.

RADIOCHEMICAL PURITY

A. Impurity A. Thin-layer chromatography (*2.2.27*).

Test solution. The preparation to be examined.

Plate: *TLC silica gel plate R*; use silica gel plate as the coating substance on a glass-fibre sheet heated at 110 °C for 10 min.

Mobile phase: 136 g/L solution of *sodium acetate R*.

Application: 5-10 µL.

Development: immediately, over a path of 10-15 cm in about 10 min.

Drying: in air.

Detection: suitable detector to determine the distribution of radioactivity.

Retardation factors: impurity A = 0.0 to 0.1; [^{99m}Tc]technetium tin pyrophosphate and impurity B = 0.9 to 1.0.

B. Impurity B. Thin-layer chromatography (*2.2.27*).

Test solution. The preparation to be examined.

Plate: *TLC silica gel plate R*; use silica gel plate as the coating substance on a glass-fibre sheet heated at 110 °C for 10 min.

Mobile phase: *methyl ethyl ketone R* through which nitrogen has been bubbled in the chromatographic tank for 10 min immediately before the chromatography.

Application: 5-10 µL and dry in a steam of nitrogen.

Development: over a path of 10-15 cm in about 10 min.

Drying: in air.

Detection: suitable detector to determine the distribution of radioactivity.

Retardation factors: [^{99m}Tc]technetium tin pyrophosphate = 0.0 to 0.1; impurity B = 0.95 to 1.0.

Limit:

– *sum of impurities A and B*: maximum 10 per cent of the total radioactivity due to technetium-99m in the chromatograms obtained in tests A and B.

Radiopharmaceutical preparations

RADIOACTIVITY

Determine the radioactivity using a calibrated instrument.

LABELLING

The label states:

- the concentration of sodium pyrophosphate expressed in milligrams per millilitre;
- the concentration of tin expressed in milligrams per millilitre.

IMPURITIES

A. [^{99m}Tc]technetium in colloidal form,

B. [^{99m}Tc]pertechnetate ion.

01/2012:2294

TETRA-*O*-ACETYL-MANNOSE TRIFLATE FOR RADIOPHARMACEUTICAL PREPARATIONS

Tetra-*O*-acetylmannosi triflas ad radiopharmaceutica

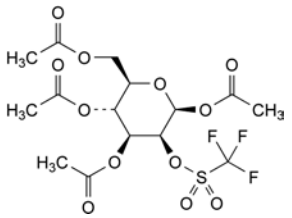

$C_{15}H_{19}F_3O_{12}S$ M_r 480.4

[92051-23-5]

DEFINITION

1,3,4,6-Tetra-*O*-acetyl-2-*O*-trifluoromethanesulfonyl-β-D-mannopyranose.

Content: 97.0 per cent to 102.0 per cent (dried substance).

CHARACTERS

Appearance: white or almost white, crystalline, hygroscopic powder.

Solubility: practically insoluble in water, very soluble in acetonitrile, freely soluble in methylene chloride, slightly soluble in ethanol (96 per cent).

IDENTIFICATION

Infrared absorption spectrophotometry (*2.2.24*).

Comparison: *tetra-O-acetyl-mannose triflate CRS*.

TESTS

Specific optical rotation (*2.2.7*): – 12.0 to – 16.0 (dried substance), measured at 20 °C.

Dissolve 0.250 g in *acetonitrile R* and dilute to 10.0 mL with the same solvent.

Impurity B. ^{19}F Nuclear magnetic resonance spectrometry (*2.2.33*). *Prepare the solutions immediately before use.*

Test solution. Dissolve 20.0 mg of the substance to be examined in *deuterated acetonitrile R* and dilute to 1.0 mL with the same solvent.

Reference solution (a). Dissolve 20.0 mg of *tetra-O-acetyl-mannose triflate CRS* in *deuterated acetonitrile R* and dilute to 1.0 mL with the same solvent.

Reference solution (b). Dissolve 4.0 mg of *lithium trifluoromethanesulfonate R* (lithium salt of impurity B) in *deuterated acetonitrile R* and dilute to 1.0 mL with the same solvent.

Reference solution (c). Mix 1.0 mL of reference solution (a) and 10 µL of reference solution (b).

Limit: the peak area identified in the spectrum obtained with the test solution at about – 78 ppm is smaller than the peak area identified in the spectrum obtained with reference solution (c) at the same chemical shift (0.2 per cent).

Related substances. Liquid chromatography (*2.2.29*). *Prepare the solutions immediately before use.*

Test solution (a). Dissolve 0.200 g of the substance to be examined in *acetonitrile R* and dilute to 2.0 mL with the same solvent.

Test solution (b). Dissolve 10.0 mg of the substance to be examined in *acetonitrile R* and dilute to 5.0 mL with the same solvent.

Reference solution (a). Dissolve 10.0 mg of *tetra-O-acetyl-mannose triflate CRS* in *acetonitrile R* and dilute to 5.0 mL with the same solvent.

Reference solution (b). Dilute 1.0 mL of test solution (a) to 10.0 mL with *acetonitrile R*. Dilute 1.0 mL of this solution to 100.0 mL with *acetonitrile R*.

Reference solution (c). Dissolve 10 mg of *1,3,4,6-tetra-O-acetyl-β-D-mannopyranose R* (impurity A) in 5 mL of *acetonitrile R*. Mix 1 mL of this solution and 1 mL of reference solution (a).

Column:

- *size*: *l* = 0.25 m, Ø = 4.0 mm;
- *stationary phase*: *octadecylsilyl silica gel for chromatography R* (5 µm);
- *temperature*: 25 °C.

Mobile phase:

- *mobile phase A*: *water R*;
- *mobile phase B*: *acetonitrile R1*;

Time (min)	Mobile phase A (per cent *V/V*)	Mobile phase B (per cent *V/V*)
0 - 1	80	20
1 - 20	80 → 55	20 → 45
20 - 35	55	45
35 - 45	55 → 0	45 → 100
45 - 50	0	100

Flow rate: 1 mL/min.

Detection: spectrophotometer at 220 nm.

Injection: 20 µL of test solution (a) and reference solutions (b) and (c).

Relative retention with reference to tetra-*O*-acetyl-mannose triflate (retention time = about 29 min): impurity A = about 0.2.

System suitability: reference solution (c):

- *resolution*: minimum 5.0 between the peaks due to impurity A and tetra-*O*-acetyl-mannose triflate.

Limits:

- *impurity A*: not more than twice the area of the principal peak in the chromatogram obtained with reference solution (b) (0.2 per cent);
- *any other impurity*: for each impurity, not more than the area of the principal peak in the chromatogram obtained with reference solution (b) (0.10 per cent);
- *total*: not more than 5 times the area of the principal peak in the chromatogram obtained with reference solution (b) (0.5 per cent);
- *disregard limit*: 0.5 times the area of the principal peak in the chromatogram obtained with reference solution (b) (0.05 per cent).

Loss on drying: maximum 0.6 per cent, determined on 25 mg by thermogravimetry (*2.2.34*). Heat to 80 °C at a rate of 2.5 °C/min.

ASSAY

Liquid chromatography (*2.2.29*) as described in the test for related substances with the following modification.

Injection: test solution (b) and reference solution (a).

Calculate the percentage content of $C_{15}H_{19}F_3O_{12}S$ from the declared content of *tetra-O-acetyl-mannose triflate CRS*.

STORAGE

In an airtight container, protected from light, at a temperature of 2 °C to 8 °C.

LABELLING

The label recommends testing the substance in a production run before its use for the manufacture of radiopharmaceutical preparations. This ensures that, under specified production conditions, the substance yields the radiopharmaceutical preparation in the desired quantity and of the quality specified.

IMPURITIES

Specified impurities: *A, B*.

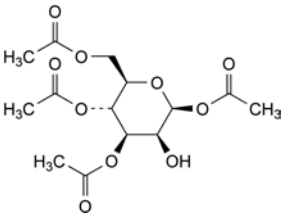

A. 1,3,4,6-tetra-*O*-acetyl-β-D-mannopyranose,

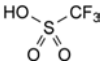

B. trifluoromethanesulfonic acid.

01/2008:0571
corrected 7.0

THALLOUS (^{201}Tl) CHLORIDE INJECTION

Thallosi (^{201}Tl) chloridi solutio iniectabilis

DEFINITION

Sterile solution of thallium-201 in the form of thallous chloride. It may be made isotonic by the addition of *Sodium chloride (0193)* and may contain a suitable antimicrobial preservative such as *Benzyl alcohol (0256)*.

Thallium-201: 90 per cent to 110 per cent of the declared thallium-201 radioactivity, at the date and time stated on the label.

Specific radioactivity: minimum 3.7 GBq per milligram of thallium.

CHARACTERS

Appearance: clear, colourless solution.

Half-life and nature of radiation of thallium-201: see general chapter *5.7. Table of physical characteristics of radionuclides*.

IDENTIFICATION

A. Gamma-ray and X-ray spectrometry.

Results: the most prominent gamma photons of thallium-201 have energies of 0.135 MeV, 0.166 MeV and 0.167 MeV; the X-rays have energies of 0.069 MeV to 0.083 MeV.

B. Examine the electropherogram obtained in the test for radiochemical purity (see Tests). The distribution of radioactivity contributes to the identification of the preparation.

TESTS

pH (*2.2.3*): 4.0 to 7.0.

Thallium.

Test solution. To 0.5 mL of the preparation to be examined add 0.5 mL of hydrochloric acid (220 g/L HCl) and 0.05 mL of *bromine water R*, and mix. Add 0.1 mL of a 30 g/L solution of *sulfosalicylic acid R*. After decolorisation add 1.0 mL of a 1 g/L solution of *rhodamine B R*. Add 4 mL of *toluene R* and shake for 60 s. Separate the toluene layer.

Reference solution. Prepare at the same time and in the same manner as the test solution, using 0.5 mL of *thallium standard solution (10 ppm Tl) R*.

The toluene layer of the test solution is not more intensely coloured than the toluene layer of the reference solution.

Sterility. It complies with the test for sterility prescribed in the monograph *Radiopharmaceutical preparations (0125)*. The preparation may be released for use before completion of the test.

RADIONUCLIDIC PURITY

Thallium-201: minimum 97.0 per cent of the total radioactivity.

Gamma-ray and X-ray spectrometry.

Determine the relative amounts of thallium-200, thallium-201, thallium-202, lead-201, lead-203 and other radionuclidic impurities present.

Result: the total radioactivity due to thallium-202 is not more than 2.0 per cent.

RADIOCHEMICAL PURITY

[^{201}Tl]Thallous ions. Zone electrophoresis (*2.2.31*).

Use a suitable cellulose acetate strip as the supporting medium and a 18.6 g/L solution of *sodium edetate R* as the electrolyte solution. Soak the strip in the electrolyte solution for 45-60 min. Remove the strip with forceps taking care to handle the outer edges only. Place the strip between 2 absorbent pads and blot to remove excess solution.

Test solution. Mix equal volumes of the preparation to be examined and the electrolyte solution.

Apply not less than 5 µL of the test solution to the centre of the strip and mark the point of application. Apply an electric field of 17 V/cm for at least 10 min. Allow the strip to dry in air. Determine the distribution of radioactivity using suitable detector.

Result: minimum 95.0 per cent of the radioactivity migrates towards the cathode.

RADIOACTIVITY

Determine the radioactivity using a calibrated instrument.

IMPURITIES

A. lead-201,

B. lead-203,

C. thallium-200,

D. thallium-202,

E. [^{201}Tl]thallic(III) ion,

01/2008:0112
corrected 7.0

TRITIATED (^{3}H) WATER INJECTION

Aquae tritiatae (^{3}H) solutio iniectabilis

DEFINITION

Water for injections in which some of the water molecules contain tritium atoms in place of protium atoms. It may be made isotonic by the addition of sodium chloride.

Radiopharmaceutical preparations

Tritium: 90 per cent to 110 per cent of the declared tritium radioactivity at the date stated on the label.

CHARACTERS

Appearance: clear, colourless solution.

Half-life and nature of radiation of tritium: see general chapter *5.7. Table of physical characteristics of radionuclides*.

IDENTIFICATION

Beta-ray spectrometry as described in test A for radionuclidic purity (see Tests).

Result: the maximum energy of the beta radiation is 0.019 MeV.

TESTS

pH (*2.2.3*): 4.5 to 7.0.

Sterility. It complies with the test for sterility prescribed in the monograph *Radiopharmaceutical preparations (0125)*.

RADIONUCLIDIC PURITY

A. *Test solution*. Mix 100 µL of a suitable dilution of the preparation to be examined with 10 mL of *liquid scintillation cocktail R1*.

Reference solution. A standardised tritiated (^{3}H) water having approximately the same radioactivity as the test solution.

Measure the radioactivity of the test solution in a liquid scintillation counter fitted with a discriminator. The count should be about 5000 impulses per second at the lowest setting of the discriminator. Record the count at different discriminator settings. For each measurement, count at least 10 000 impulses over a period of at least 1 min. Immediately determine in the same conditions the count for the reference solution.

Plot the counts at each discriminator setting, correcting for background activity, on semi-logarithmic paper, the discriminator settings being in arbitrary units as the abscissae. The vertical distance between the 2 curves obtained is constant. They obey the following mathematical relationship:

$$\frac{\frac{A_1}{B_1} - \frac{A_2}{B_2}}{\frac{A_1}{B_1}} \times 100 < 20$$

A_1 = radioactivity recorded for the reference solution at the lowest discriminator setting;

B_1 = radioactivity recorded for the test solution at the lowest discriminator setting;

A_2 = radioactivity recorded for the reference solution at the discriminator setting such that $A_2 \approx A_1 \times 10^{-3}$;

B_2 = radioactivity recorded for the test solution at the latter discriminator setting.

B. Gamma-ray spectrometry. The instrument registers only background activity.

RADIOCHEMICAL PURITY

Place a quantity of the preparation to be examined equivalent to about 74 kBq, diluted to 50 mL with *water R*, in an all-glass distillation apparatus of the type used for the determination of distillation range (*2.2.11*). Determine the radioactive concentration. Distil until about 25 mL of distillate has been collected. Precautions must be taken to avoid contamination of the air. If the test is carried out in a fume cupboard, the equipment must be protected from draughts. Determine the radioactive concentration of the distillate and of the liquid remaining in the distillation flask. Neither of the radioactive concentrations determined after distillation differs by more than 5 per cent from the value determined before distillation.

RADIOACTIVITY

Determine the radioactivity using a liquid scintillation counter.

01/2008:1582
corrected 7.0

WATER (^{15}O) INJECTION

Aquae (^{15}O) solutio iniectabilis

DEFINITION

Sterile solution of [^{15}O]water for diagnostic use.

Oxygen-15: 90 per cent to 110 per cent of the declared oxygen-15 radioactivity at the date and time stated on the label.

CHARACTERS

Appearance: clear, colourless liquid.

Half-life and nature of radiation of oxygen-15: see general chapter *5.7. Table of physical characteristics of radionuclides*.

IDENTIFICATION

A. Gamma-ray spectrometry.

Results: the only gamma photons of [^{15}O]water have an energy of 0.511 MeV and, depending on the measurement geometry, a sum peak of 1.022 MeV may be observed.

B. Radionuclidic purity (see Tests).

C. Examine the chromatogram obtained in the test for radiochemical purity (see Tests). The retention time of the 2nd peak is due to the radioactivity eluting in the void volume.

TESTS

pH (*2.2.3*): 5.5 to 8.5.

Ammonium (*2.4.1*): maximum 10 ppm, determined on 1 mL. The preparation may be released for use before completion of the test.

Nitrates: maximum 10 ppm. The preparation may be released for use before completion of the test.

Test solution. To 1 mL add 49 mL of *nitrate-free water R*. Place 5 mL of this solution in a test-tube immersed in iced water, add 0.4 mL of a 100 g/L solution of *potassium chloride R*, 0.1 mL of *diphenylamine solution R* and, dropwise with shaking, 5 mL of *sulfuric acid R*. Transfer the tube to a water-bath at 50 °C.

Reference solution. Prepare at the same time in the same manner as the test solution, using a mixture of 4.5 mL of *nitrate-free water R* and 0.5 mL of *nitrate standard solution (2 ppm NO_3) R*.

After 15 min, any blue colour in the test solution is not more intense than that in the reference solution.

Sterility. It complies with the test for sterility prescribed in the monograph *Radiopharmaceutical preparations (0125)*. The preparation may be released for use before completion of the test.

Bacterial endotoxins (*2.6.14*): less than 175/*V* IU/mL, *V* being the maximum recommended dose in millilitres. The preparation may be released for use before completion of the test.

RADIONUCLIDIC PURITY

The preparation may be released for use before completion of the test.

Oxygen-15: minimum 99 per cent of total radioactivity.

Gamma-ray spectrometry.

Results:

– the spectrum obtained with the preparation to be examined does not differ significantly from that obtained with a standardised fluorine-18 solution;

Radiopharmaceutical preparations

– the half-life is between 1.9 min and 2.2 min.

RADIOCHEMICAL PURITY

The preparation may be released for use before completion of the test.

[^{15}O]Water. Liquid chromatography (*2.2.29*).

Test solution. The preparation to be examined.

Column:

– *size*: l = 0.25 m, Ø = 4.0 mm;

– *stationary phase*: *aminopropylsilyl silica gel for chromatography R* (10 µm);

– *temperature*: constant, at 20-30 °C.

Mobile phase: 10 g/L solution of *potassium dihydrogen phosphate R* adjusted to pH 3 with *phosphoric acid R*.

Flow rate: 1 mL/min.

Detection: suitable detector to determine the distribution of radioactivity and internal recovery detection system, consisting of a loop of the chromatographic tubing between the injector and the column through the radioactivity detector, which has been calibrated for count recovery.

Run time: 10 min.

Identification of peaks: in the chromatogram obtained with the test solution, the 1st peak corresponds to the injected radioactivity of the test solution, the 2nd peak corresponds to the amount of radioactivity as [^{15}O]water.

Limit:

– *[^{15}O]water*: minimum 99 per cent of the total radioactivity due to oxygen-15.

RADIOACTIVITY

Determine the radioactivity using a calibrated instrument.

01/2008:0133
corrected 7.0

XENON (^{133}Xe) INJECTION

Xenoni (^{133}Xe) solutio iniectabilis

DEFINITION

Sterile solution of xenon-133 that may be made isotonic by the addition of sodium chloride.

Xenon-133: 80 per cent to 130 per cent of the declared xenon-133 radioactivity at the date and time stated on the label.

The injection is presented in a container that allows the contents to be removed without introducing air bubbles. The container is filled as completely as possible and any gas bubble present does not occupy more than 1 per cent of the volume of the injection as judged by visual comparison with a suitable standard.

CHARACTERS

Appearance: clear, colourless solution.

Half-life and nature of radiation of xenon-133: see general chapter *5.7. Table of physical characteristics of radionuclides*.

IDENTIFICATION

Gamma-ray and X-ray spectrometry.

Comparison: standardised xenon-133 solution in a 9 g/L solution of *sodium chloride R*.

Results: the most prominent gamma photon of xenon-133 has an energy of 0.081 MeV and there is an X-ray (resulting from internal conversion) of 0.030 MeV to 0.035 MeV.

TESTS

pH (*2.2.3*): 5.0 to 8.0.

Sterility. It complies with the test for sterility prescribed in the monograph *Radiopharmaceutical preparations (0125)*. The preparation may be released for use before completion of the test.

RADIONUCLIDIC PURITY

A. Gamma-ray and X-ray spectrometry.

Comparison: standardised xenon-133 solution in a 9 g/L solution of *sodium chloride R*.

Result: the spectrum obtained with the preparation to be examined does not differ significantly from that obtained with a standardised xenon-133 solution in a 9 g/L solution of *sodium chloride R*, apart from any differences attributable to the presence of xenon-131m and xenon-133m.

B. Transfer 2 mL of the preparation to be examined to an open flask and pass a current of air through the solution for 30 min, taking suitable precautions concerning the dispersion of radioactivity. Measure the residual beta and gamma activity of the solution. The activity does not differ significantly from the background activity detected by the instrument.

RADIOACTIVITY

Weigh the container with its contents. Determine its total radioactivity using suitable counting equipment by comparison with a standardised xenon-133 solution or by measurement in an instrument calibrated with the aid of such a solution, operating in strictly identical conditions. If an ionisation chamber is used its inner wall should be such that the radiation is not seriously attenuated. Remove at least half the contents and re-weigh the container. Measure the total residual radioactivity of the container and the remaining contents as described above. From the measurements, calculate the radioactive concentration of xenon-133 in the preparation to be examined.

CAUTION

Significant amounts of xenon-133 may be present in the closures and on the walls of the container. This must be taken into account in applying the rules concerning the transport and storage of radioactive substances and in disposing of used containers

IMPURITIES

A. xenon-131m.

01/2008:90004

INTRODUCTION

The following monographs apply to sutures for human use: Catgut, sterile (0317), Sutures, sterile non-absorbable (0324), Sutures, sterile synthetic absorbable braided (0667) and Sutures, sterile synthetic absorbable monofilament (0666). They cover performance characteristics of sutures and may include methods of identification. Sutures are medical devices as defined in Directive 93/42/EEC.

These monographs can be applied to show compliance with essential requirements as defined in Article 3 of Directive 93/42/EEC covering the following:

Physical performance characteristics: diameter, breaking load, needle attachment, packaging, sterility, information supplied by the manufacturer (see Section 13 of Annex 1 of Directive 93/42/EEC), labelling.

To show compliance with other essential requirements, the application of appropriate harmonised standards as defined in Article 5 of Directive 93/42/EEC may be considered.

01/2008:0317

CATGUT, STERILE

Chorda resorbilis sterilis

DEFINITION

Sterile catgut consists of sutures prepared from collagen taken from the intestinal membranes of mammals. After cleaning, the membranes are split longitudinally into strips of varying width, which, when assembled in small numbers, according to the diameter required, are twisted under tension, dried, polished, selected and sterilised. The sutures may be treated with chemical substances such as chromium salts to prolong absorption and glycerol to make them supple, provided such substances do not reduce tissue acceptability.

Appropriate harmonised standards may be considered when assessing compliance with respect to origin and processing of raw materials and with respect to biocompatibility.

Sterile catgut is a surgical wound-closure device. Being an absorbable suture it serves to approximate tissue during the healing period and is subsequently metabolised by proteolytic activity.

PRODUCTION

Production complies with relevant regulations on the use of animal tissues in medical devices notably concerning the risk of transmission of animal spongiform encephalopathy agents.

Appropriate harmonised standards may apply with respect to appropriate validated methods of sterilisation, environmental control during manufacturing, labelling and packaging.

It is essential for the effectiveness and the performance characteristics during use and during the functional lifetime of catgut that the following physical properties are specified: consistent diameter, sufficient initial strength and firm needle attachment.

The requirements outlined below have been established, taking into account stresses which occur during normal conditions of use. These requirements can be used to demonstrate that individual production batches of sterile catgut are suitable for wound closure according to usual surgical techniques.

TESTS

If stored in a preserving liquid, remove the sutures from the sachet and measure promptly and in succession the length, diameter and breaking load. If stored in the dry state, immerse the sutures in alcohol R or a 90 per cent V/V solution of 2-propanol R for 24 h and proceed with the measurements as indicated below.

Length. Measure the length without applying to the suture more tension than is necessary to keep it straight. The length of each suture is not less than 90 per cent of the length stated on the label and does not exceed 350 cm.

Diameter. Carry out the test on 5 sutures. Use a suitable instrument capable of measuring with an accuracy of at least 0.002 mm and having a circular pressor foot 10 mm to 15 mm in diameter. The pressor foot and the moving parts attached to it are weighted so as to apply a total load of 100 ± 10 g to the suture being tested. When making the measurement, lower the pressor foot slowly to avoid crushing the suture. Measure the diameter at intervals of 30 cm over the whole length of the suture. For a suture less than 90 cm in length, measure at 3 points approximately evenly spaced along the suture. The suture is not subjected to more tension than is necessary to keep it straight during measurement. The average of the measurements carried out on the sutures being tested and not less than two-thirds of the measurements taken on each suture are within the limits given in the columns under A in Table 0317.-1 for the gauge number concerned. None of the measurements is outside the limits given in the columns under B in Table 0317.-1 for the gauge number concerned.

Table 0317.-1. – *Diameters and Breaking Loads*

Gauge number	Diameter (millimetres)				Breaking load (newtons)	
	A		B		C	D
	min.	max.	min.	max.		
0.1	0.010	0.019	0.005	0.025	-	-
0.2	0.020	0.029	0.015	0.035	-	-
0.3	0.030	0.039	0.025	0.045	0.20	0.05
0.4	0.040	0.049	0.035	0.060	0.30	0.10
0.5	0.050	0.069	0.045	0.085	0.40	0.20
0.7	0.070	0.099	0.060	0.125	0.70	0.30
1	0.100	0.149	0.085	0.175	1.8	0.40
1.5	0.150	0.199	0.125	0.225	3.8	0.70
2	0.200	0.249	0.175	0.275	7.5	1.8
2.5	0.250	0.299	0.225	0.325	10	3.8
3	0.300	0.349	0.275	0.375	12.5	7.5
3.5	0.350	0.399	0.325	0.450	20	10
4	0.400	0.499	0.375	0.550	27.5	12.5
5	0.500	0.599	0.450	0.650	38.0	20.0
6	0.600	0.699	0.550	0.750	45.0	27.5
7	0.700	0.799	0.650	0.850	60.0	38.0
8	0.800	0.899	0.750	0.950	70.0	45.0

Minimum breaking load. The minimum breaking load is determined over a simple knot formed by placing one end of a suture held in the right hand over the other end held in the left hand, passing one end over the suture and through the loop so formed (see Figure 0317.-1) and pulling the knot tight. Carry out the test on 5 sutures. Submit sutures of length greater than 75 cm to 2 measurements and shorter sutures to one measurement. Determine the breaking load using a suitable tensilometer. The apparatus has 2 clamps for holding the suture, one of which is mobile and is driven at a constant rate of 30 cm/min. The clamps are designed so that the suture being tested can be attached without any possibility of slipping. At the beginning of the test the length of suture between the clamps is 12.5 cm to 20 cm and the knot is midway between the clamps. Set the mobile clamp in motion and note the force required to break the suture. If the suture breaks in a clamp or within 1 cm of it, the result is discarded and the test repeated on another suture. The average of all the

results, excluding those legitimately discarded, is equal to or greater than the value given in column C in Table 0317.-1 and no individual result is less than that given in column D for the gauge number concerned.

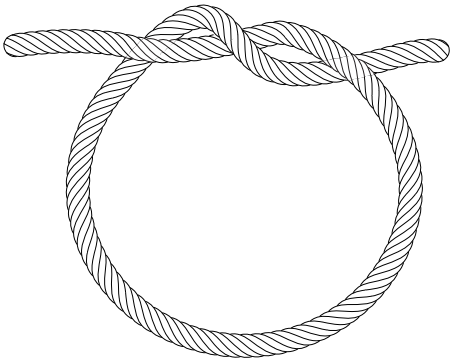

Figure 0317.-1. – *Simple knot*

Soluble chromium compounds. Place 0.25 g in a conical flask containing 1 mL of *water R* per 10 mg of catgut. Stopper the flask, allow to stand at 37 ± 0.5 °C for 24 h, cool and decant the liquid. Transfer 5 mL to a small test tube and add 2 mL of a 10 g/L solution of *diphenylcarbazide R* in *alcohol R* and 2 mL of *dilute sulfuric acid R*. The solution is not more intensely coloured than a standard prepared at the same time using 5 mL of a solution containing 2.83 µg of *potassium dichromate R* per millilitre, 2 mL of *dilute sulfuric acid R* and 2 mL of a 10 g/L solution of *diphenylcarbazide R* in *alcohol R* (1 ppm of Cr).

Needle attachment. If the catgut is supplied with an eyeless needle attached that is not stated to be detachable, it complies with the test for needle attachment. Carry out the test on 5 sutures. Use a suitable tensilometer, such as that described for the determination of the minimum breaking load. Fix the needle and suture (without knot) in the clamps of the apparatus in such a way that the swaged part of the needle is completely free of the clamp and in line with the direction of pull on the suture. Set the mobile clamp in motion and note the force required to break the suture or to detach it from the needle. The average of the 5 determinations and all individual values are not less than the respective values given in Table 0317.-2 for the gauge number concerned. If not more than one individual value fails to meet the individual requirement, repeat the test on an additional 10 sutures. The catgut complies with the test if none of these 10 values is less than the individual value in Table 0317.-2 for the gauge number concerned.

Table 0317.-2. – *Minimum Strengths of Needle Attachment*

Gauge number	Mean value (newtons)	Individual values (newtons)
0.5	0.50	0.25
0.7	0.80	0.40
1	1.7	0.80
1.5	2.3	1.1
2	4.5	2.3
2.5	5.6	2.8
3	6.8	3.4
3.5	11.0	4.5
4	15.0	4.5
5	18.0	6.0

STORAGE (PACKAGING)

Sterile catgut sutures are presented in individual sachets that maintain sterility and allow the withdrawal and use of the sutures in aseptic conditions. Sterile catgut may be stored dry or in a preserving liquid to which an antimicrobial agent but not an antibiotic may be added.

Sutures in their individual sachets (primary packaging) are kept in a protective cover (box) which maintains the physical and mechanical properties until the time of use.

The application of appropriate harmonised standards for packaging of medical devices shall be considered.

LABELLING

Reference may be made to the appropriate harmonised standards for labelling of medical devices.

The details strictly necessary for the user to identify the product properly are indicated on or in each sachet (primary packaging) and on the protective cover (box) and include at least:

- gauge number,
- length in centimetres or metres,
- if appropriate, that the needle is detachable,
- name of the product,
- intended use (surgical suture, absorbable).

01/2008:0324

SUTURES, STERILE NON-ABSORBABLE

Fila non resorbilia sterilia

DEFINITION

Sterile non-absorbable sutures are sutures which, when introduced into a living organism, are not metabolised by that organism. Sterile non-absorbable sutures vary in origin, which may be animal, vegetable, metallic or synthetic. They occur as cylindrical monofilaments or as multifilament sutures consisting of elementary fibres which are assembled by twisting, cabling or braiding; they may be sheathed; they may be treated to render them non-capillary, and they may be coloured.

Appropriate harmonised standards may be considered when assessing compliance with respect to origin and processing of raw materials and with respect to biocompatibility.

Sterile non-absorbable surgical sutures serve to approximate tissue during the healing period and provide continuing wound support.

Commonly used materials include the following:

Silk (Filum bombycis)

Sterile braided silk suture is obtained by braiding a number of threads, according to the diameter required, of degummed silk obtained from the cocoons of the silkworm *Bombyx mori* L.

Linen (Filum lini)

Sterile linen thread consists of the pericyclic fibres of the stem of *Linum usitatissimum* L. The elementary fibres, 2.5 cm to 5 cm long, are assembled in bundles 30 cm to 80 cm long and spun into continuous lengths of suitable diameter.

Poly(ethylene terephthalate) (Filum ethyleni polyterephthalici)

Sterile poly(ethylene terephthalate) suture is obtained by drawing poly(ethylene terephthalate) through a suitable die. The suture is prepared by braiding very fine filaments in suitable numbers, depending on the gauge required.

Polyamide-6 (Filum polyamidicum-6)

Sterile polyamide-6 suture is obtained by drawing through a suitable die a synthetic plastic material formed by the polymerisation of ε-caprolactam. It consists of smooth,

cylindrical monofilaments or braided filaments, or lightly twisted sutures sheathed with the same material.

Polyamide-6/6 (Filum polyamidicum-6/6)

Sterile polyamide-6/6 suture is obtained by drawing through a suitable die a synthetic plastic material formed by the polycondensation of hexamethylenediamine and adipic acid. It consists of smooth, cylindrical monofilaments or braided filaments, or lightly twisted sutures sheathed with the same material.

Polypropylene (Filum polypropylenicum)

Polypropylene suture is obtained by drawing polypropylene through a suitable die. It consists of smooth cylindrical mono-filaments.

Monofilament and multifilament stainless steel (Filum aciei irrubiginibilis monofilamentum/multifilamentum)

Sterile stainless steel sutures have a chemical composition as specified in ISO 5832-1 - Metallic Materials for surgical implants - Part 1: Specification for wrought stainless steel and comply with ISO 10334 - Implants for surgery - Malleable wires for use as sutures and other surgical applications.

Stainless steel sutures consist of smooth, cylindrical monofilaments or twisted filaments or braided filaments.

Poly(vinylidene difluoride) (PVDF) (Filum poly(vinylideni difluoridum))

Sterile PVDF suture is obtained by drawing through a suitable die a synthetic plastic material which is formed by polymerisation of 1,1-difluorethylene. It consists of smooth cylindrical monofilaments.

IDENTIFICATION

Non-absorbable sutures may be identified by chemical tests. Materials from natural origin may also be identified by microscopic examination of the morphology of these fibres. For synthetic materials, identification by infrared spectrophotometry (*2.2.24*) or by differential scanning calorimetry may be applied.

Identification of silk

A. Dissect the end of a suture, using a needle or fine tweezers, to isolate a few individual fibres. The fibres are sometimes marked with very fine longitudinal striations parallel to the axis of the suture. Examined under a microscope, a cross-section is more or less triangular to semi-circular, with rounded edges and without a lumen.

B. Impregnate isolated fibres with *iodinated potassium iodide solution R*. The fibres are coloured pale yellow.

Identification of linen

A. Dissect the end of a suture, using a needle or fine tweezers, to isolate a few individual fibres. Examined under a microscope, the fibres are seen to be 12 µm to 31 µm wide and, along the greater part of their length, have thick walls, sometimes marked with fine longitudinal striations, and a narrow lumen. The fibres gradually narrow to a long, fine point. Sometimes there are unilateral swellings with transverse lines.

B. Impregnate isolated fibres with *iodinated zinc chloride solution R*. The fibres are coloured violet-blue.

Identification of poly(ethyleneterephthalate)

It is practically insoluble in most of the usual organic solvents, but is attacked by strong alkaline solutions. It is incompatible with phenols.

A. 50 mg dissolves with difficulty when heated in 50 mL of *dimethylformamide R*.

B. To about 50 mg add 10 mL of *hydrochloric acid R1*. The material remains intact even after immersion for 6 h.

Identification of polyamide-6

It is practically insoluble in the usual organic solvents; it is not attacked by dilute alkaline solutions (for example a 100 g/L solution of *sodium hydroxide R*) but is attacked by dilute mineral acids (for example a 20 g/L solution of *sulfuric acid R*), by hot *glacial acetic acid R* and by a 70 per cent *m/m* solution of *anhydrous formic acid R*.

A. Heat about 50 mg with 0.5 mL of *hydrochloric acid R1* in a sealed glass tube at 110 °C for 18 h and allow to stand for 6 h. No crystals appear.

B. 50 mg dissolves in 20 mL of a 70 per cent *m/m* solution of *anhydrous formic acid R*.

Identification of polyamide-6/6

It is practically insoluble in the usual organic solvents; it is not attacked by dilute alkaline solutions (for example a 100 g/L solution of *sodium hydroxide R*) but is attacked by dilute mineral acids (for example a 20 g/L solution of *sulfuric acid R*), by hot *glacial acetic acid R* and by an 80 per cent *m/m* solution of *anhydrous formic acid R*.

A. In contact with a flame it melts and burns, forming a hard globule of residue and gives off a characteristic odour resembling that of celery.

B. Place about 50 mg in an ignition tube held vertically and heat gently until thick fumes are evolved. When the fumes fill the tube, withdraw it from the flame and insert a strip of *nitrobenzaldehyde paper R*. A violet-brown colour slowly appears on the paper and fades slowly in air; it disappears almost immediately on washing with *dilute sulfuric acid R*.

C. To about 50 mg add 10 mL of *hydrochloric acid R1*. The material disintegrates in the cold and dissolves within a few minutes.

D. 50 mg does not dissolve in 20 mL of a 70 per cent *m/m* solution of *anhydrous formic acid R* but dissolves in 20 mL of an 80 per cent *m/m* solution of *anhydrous formic acid R*.

Identification of polypropylene

Polypropylene is soluble in decahydronaphthalene, 1-chloronaphthalene and trichloroethylene. It is not soluble in alcohol, in ether and in cyclohexanone.

A. It softens at temperatures between 160 °C and 170 °C. It burns with a blue flame giving off an odour of burning paraffin wax and of octyl alcohol.

B. To 0.25 g add 10 mL of *toluene R* and boil under a reflux condenser for about 15 min. Place a few drops of the solution on a disc of *sodium chloride R* slide and evaporate the solvent in an oven at 80 °C. Examine by infrared absorption spectrophotometry (*2.2.24*), comparing with the spectrum obtained with *polypropylene CRS*.

C. To 2 g add 100 mL of *water R* and boil under a reflux condenser for 2 h. Allow to cool. The relative density (*2.2.5*) of the material is 0.89 g/mL to 0.91 g/mL, determined using a hydrostatic balance.

Identification of stainless steel

Stainless steel sutures are identified by confirming that the composition is in accordance with ISO 5832 Part 1.

Identification of poly(vinylidene difluoride)

It is soluble in warm dimethylformamide. It is insoluble in ethanol, hot and cold isopropyl alcohol, ethyl acetate, tetrachlorethylene.

A. The strand melts between 170 °C and 180 °C. It melts in a flame and does not burn after removal of the flame. Place a small piece of suture on an annealed copper wire or sheet. Heat in an oxidising flame. No green colour is produced.

B. Dissolve 0.25 g of the suture in 10 mL of *dimethylformamide R* and boil under a reflux condenser for about 15 min. Place a few drops of the solution on a *sodium chloride R* slide and evaporate the solvent in an oven at 80 °C (1 h). Examine by infrared absorption spectrophotometry (*2.2.24*). The spectrum shows absorption maxima at the following wave-numbers: 838.3 ± 0.5 cm^{-1}, 873.3 ± 1 cm^{-1}, 1070.0 ± 2 cm^{-1}, 1165.0 ± 10 cm^{-1}, 1275 ± 0.5 cm^{-1}, 1399 ± 5 cm^{-1}.

C. To 2 g of suture add 100 mL of *water R* and boil under a reflux condenser for 2 h. Allow to cool. The relative density (*2.2.5*) of the material is 1.71 to 1.78.

PRODUCTION

The appropriate harmonised standards may apply with respect to appropriate validated methods of sterilisation, environmental control during manufacturing, labelling and packaging.

It is essential for the effectiveness and the performance characteristics during use and during the functional lifetime of these sutures that the following physical properties are specified: consistent diameter, sufficient initial strength and firm needle attachment.

The requirements below have been established, taking into account stresses which occur during normal conditions of use. These requirements can be used to demonstrate that individual production batches of these sutures are suitable for wound closure in accordance with usual surgical techniques.

TESTS

Remove the sutures from the sachet and measure promptly and in succession the length, diameter and minimum load.

If linen is tested the sutures are conditioned as follows: if stored in the dry state, expose to an atmosphere with a relative humidity of 65 ± 5 per cent at 20 ± 2 °C for 4 h immediately before measuring the diameter and for the determination of minimum breaking load immerse in *water R* at room temperature for 30 min immediately before carrying out the test.

Length. Measure the length without applying more tension than is necessary to keep them straight. The length of the suture is not less than 95 per cent of the length stated on the label and does not exceed 400 cm.

Diameter. Unless otherwise prescribed, measure the diameter by the following method using 5 sutures. Use a suitable mechanical instrument capable of measuring with an accuracy of at least 0.002 mm and having a circular pressor foot 10-15 mm in diameter. The pressor foot and the moving parts attached to it are weighted so as to apply a total load of 100 ± 10 g to the suture being tested. When making the measurements, lower the pressor foot slowly to avoid crushing the suture. Measure the diameter at intervals of 30 cm over the whole length of the suture. For a suture less than 90 cm in length, measure at 3 points approximately evenly spaced along the suture. During the measurement submit monofilament sutures to a tension not greater than that required to keep them straight. Submit multifilament sutures to a tension not greater than one-fifth of the minimum breaking load shown in column C of Table 0324.-1 appropriate to the gauge number and type of material concerned or 10 N whichever is less. Stainless steel sutures do not require tension to be applied during the measurement of diameter. For multifilament sutures of gauge number above 1.5 make 2 measurements at each point, the second measurement being made after rotating the suture through 90°. The diameter of that point is the average of the 2 measurements. The average of the measurements carried out on the sutures being tested and not less than two-thirds of the measurements taken on each suture are within the limits given in the column under A in Table 0324.-1 for the gauge number concerned. None of the measurements are outside the limits given in the columns under B in Table 0324.-1 for the gauge number concerned.

Table 0324.-1. – *Diameters and minimum breaking loads*

Gauge number	Diameter (millimetres)				Minimum breaking load (newtons)					
	A		B		Linen thread		All other non-absorbable strands		Stainless steel	
	min.	max.	min.	max.	C	D	C	D	C	D
0.05	0.005	0.009	0.003	0.012	-	-	0.01	-		
0.1	0.010	0.019	0.005	0.025	-	-	0.03	-		
0.15	0.015	0.019	0.012	0.025	-	-	0.06	0.01		
0.2	0.020	0.029	0.015	0.035	-	-	0.1	-		
0.3	0.030	0.039	0.025	0.045	-	-	0.35	0.06		
0.4	0.040	0.049	0.035	0.060	-	-	0.60	0.15	1.1	
0.5	0.050	0.069	0.045	0.085	-	-	1.0	0.35	1.6	
0.7	0.070	0.099	0.060	0.125	1.0	0.3	1.5	0.60	2.7	
1	0.100	0.149	0.085	0.175	2.5	0.6	3.0	1.0	5.3	4.0
1.5	0.150	0.199	0.125	0.225	5.0	1.0	5.0	1.5	8.0	6.0
2	0.200	0.249	0.175	0.275	8.0	2.5	9.0	3.0	13.3	10.0
2.5	0.250	0.299	0.225	0.325	9.0	5.0	13.0	5.0	15.5	11.6
3	0.300	0.349	0.275	0.375	11.0	8.0	15.0	9.0	17.7	13.3
3.5	0.350	0.399	0.325	0.450	15.0	9.0	22.0	13.0	33.4	25.0
4	0.400	0.499	0.375	0.550	18,0	11.0	27.0	15.0	46.7	35.0
5	0.500	0.599	0.450	0.650	26.0	15.0	35.0	22.0	57.9	43.4
6	0.600	0.699	0,.550	0.750	37.0	18.0	50.0	27.0	89.4	67.0
7	0.700	0.799	0.650	0.850	50.0	26.0	62.0	35.0	111.8	83.9
8	0.800	0.899	0.750	0.950	65.0	37.0	73.0	50.0	133.4	100.1
9	0.900	0.999	0.850	1.050					156.0	117.0
10	1.000	1.099	0.950	1.150					178.5	133.9

Minimum breaking load. Unless otherwise prescribed, determine the minimum breaking load by the following method using sutures in the condition in which they are presented. The minimum breaking load is determined over a simple knot formed by placing one end of a suture held in the right hand over the other end held in the left hand, passing one end over the suture and through the loop so formed (see Figure 0324.-1) and pulling the knot tight. For stainless steel sutures gauges 3.5 and above, the minimum breaking load is determined on a straight pull. Carry out the test on 5 sutures. Submit sutures of length greater than 75 cm to 2 measurements and shorter sutures to 1 measurement. Determine the breaking load using a suitable tensilometer. The apparatus has 2 clamps for holding the suture, 1 of which is mobile and is driven at a constant rate of 30 cm/min. The clamps are designed so that the suture being tested can be attached without any possibility of slipping. At the beginning of the test the length of suture between the clamps is 12.5 cm to 20 cm and the knot is midway between the clamps. Set the mobile clamp in motion and note the force required to break the suture. If the suture breaks in a clamp or within 1 cm of it, the result is discarded and the test repeated on another suture. The average of all the results, excluding those legitimately discarded, is equal to or greater than the value given in column C in Table 0324.-1 and no value is less than that given in column D for the gauge number and type of material concerned.

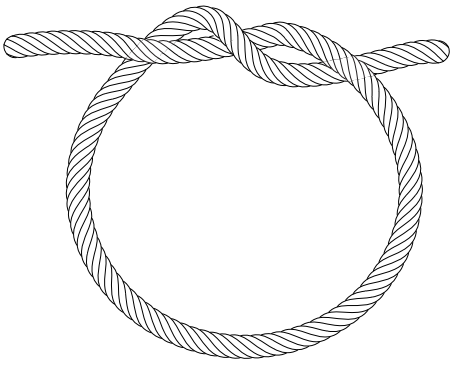

Figure 0324.-1. – *Simple knot*

Needle attachment. If the sutures are supplied with an eyeless needle attached that is not stated to be detachable, they comply with the test for needle attachment. Carry out the test on 5 sutures. Use a suitable tensilometer, such as that described for the determination of the minimum breaking load. Fix the needle and suture (without knot) in the clamps of the apparatus in such a way that the swaged part of the needle is completely free of the clamp and in line with the direction of pull on the suture. Set the mobile clamp in motion and note the force required to break the suture or to detach it from the needle. The average of the 5 determinations and all individual values are not less than the respective values given in Table 0324.-2 for the gauge number concerned. If not more than 1 individual value fails to meet the individual requirement, repeat the test on an additional 10 sutures. The attachment complies with the test if none of these 10 values is less than the individual value in Table 0324.-2 for the gauge number concerned.

Extractable colour. Sutures that are dyed and intended to remain so during use comply with the test for extractable colour. Place 0.25 g of the suture to be examined in a conical flask, add 25.0 mL of *water R* and cover the mouth of the flask with a short-stemmed funnel. Boil for 15 min, cool and adjust to the original volume with *water R*. Depending on the colour of the suture, prepare the appropriate reference solution as described in Table 0324.-3 using the primary colour solutions (*2.2.2*).

The test solution is not more intensely coloured than the appropriate reference solution.

Monomer and oligomers. Polyamide-6 suture additionally complies with the following test for monomer and oligomers. In a continuous-extraction apparatus, treat 1.00 g with 30 mL of *methanol R* at a rate of at least 3 extractions per hour for 7 h. Evaporate the extract to dryness, dry the residue at 110 °C for 10 min, allow to cool in a desiccator and weigh. The residue weighs not more than 20 mg (2 per cent).

STORAGE (PACKAGING)

Sterile non-absorbable sutures are presented in a suitable sachet that maintains sterility and allows the withdrawal and use of a suture in aseptic conditions. They may be stored dry or in a preserving liquid to which an antimicrobial agent but no antibiotic may be added.

Sterile non-absorbable sutures are intended to be used only on the occasion when the sachet is first opened.

Sutures in their individual sachets (primary packaging) are kept in a protective cover (box) which maintains the physical and mechanical properties until the time of use.

The application of appropriate harmonised standards for packaging of medical devices shall be considered in addition.

Table 0324.-2. – *Minimum strengths of needle attachment*

Gauge number	Mean value (newtons)	Individual value (newtons)
0.4	0.50	0.25
0.5	0.80	0.40
0.7	1.7	0.80
1	2.3	1.1
1.5	4.5	2.3
2	6.8	3.4
2.5	9.0	4.5
3	11.0	4.5
3.5	15.0	4.5
4	18.0	6.0
5	18.0	7.0
6	25.0	12.5
7	25.0	12.5
8	50.0	25
9	50.0	25
10	75.0	37.5

Table 0324.-3. – *Colour reference solutions*

Colour of strand	Composition of reference solution (parts by volume)			
	Red primary solution	Yellow primary solution	Blue primary solution	*Water R*
Yellow-brown	0.2	1.2	-	8.6
Pink-red	1.0	-	-	9.0
Green-blue	-	-	2.0	8.0
Violet	1.6	-	8.4	-

Sutures

LABELLING

Reference may be made to the appropriate harmonised standards for the labelling of medical devices.

The details strictly necessary for the user to identify the product properly are indicated on or in each sachet (primary packaging) and on the protective cover (box) and include at least:

- gauge number,
- length, in centimetres or metres,
- if appropriate, that the needle is detachable,
- name of the product,
- intended use (surgical suture, non-absorbable),
- if appropriate, that the suture is coloured,
- if appropriate, the structure (braided, monofilament, sheathed).

01/2008:0667

SUTURES, STERILE SYNTHETIC ABSORBABLE BRAIDED

Fila resorbilia synthetica torta sterilia

DEFINITION

Sterile synthetic absorbable braided sutures consist of sutures prepared from a synthetic polymer, polymers or copolymers which, when introduced into a living organism, are absorbed by that organism and cause no undue tissue irritation. They consist of completely polymerised material. They occur as multifilament sutures consisting of elementary fibres which are assembled by braiding. The sutures may be treated to facilitate handling and they may be coloured.

Appropriate harmonised standards may be considered when assessing compliance with respect to origin and processing of raw materials and with respect to biocompatibility.

Sterile synthetic absorbable braided sutures are wound-closure devices. Being absorbable they serve to approximate tissue during the healing period and subsequently lose tensile strength by hydrolysis.

PRODUCTION

Appropriate harmonised standards may apply with respect to appropriate validated methods of sterilisation, environmental control during manufacturing, labelling and packaging.

It is essential for the effectiveness and the performance characteristics during use and during the functional lifetime of these sutures that the following physical properties are specified: consistent diameter, sufficient initial strength and firm needle attachment.

The requirements below have been established, taking into account stresses which occur during normal conditions of use. These requirements can be used to demonstrate that individual production batches of these sutures are suitable for wound closure according to usual surgical techniques.

TESTS

Carry out the following tests on the sutures in the state in which they are removed from the sachet.

Length. Measure the length of the suture without applying more tension than is necessary to keep it straight. The length of each suture is not less than 95 per cent of the length stated on the label and does not exceed 400 cm.

Diameter. Unless otherwise prescribed, measure the diameter by the following method, using five sutures in the condition in which they are presented. Use a suitable instrument capable of measuring with an accuracy of at least 0.002 mm and having a circular pressor foot 10 mm to 15 mm in diameter. The pressor foot and the moving parts attached to it are weighted so as to apply a total load of 100 ± 10 g to the suture being tested. When making the measurements, lower the pressor foot slowly to avoid crushing the suture. Measure the diameter at intervals of 30 cm over the whole length of the suture. For a suture less than 90 cm in length, measure at three points approximately evenly spaced along the suture. During the measurement, submit the sutures to a tension not greater than one-fifth of the minimum breaking load shown in column C of Table 0667.-1 appropriate to the gauge number and type of material or 10 N whichever is less. For sutures of gauge number above 1.5 make two measurements at each point, the second measurement being made after rotating the suture through 90°. The diameter of that point is the average of the two measurements. The average of the measurements carried out on the sutures being tested and not less than two-thirds of the measurements taken on each suture are within the limits given in the columns under A in Table 0667.-1 for the gauge number concerned. None of the measurements is outside the limits given in the columns under B in Table 0667.-1 for the gauge number concerned.

Table 0667.-1. – *Diameters and breaking loads*

Gauge number	Diameter (millimetres)				Breaking load (newtons)	
	A		B		C	D
	min.	max.	min.	max.		
0.01	0.001	0.004	0.0008	0.005	-	-
0.05	0.005	0.009	0.003	0.012	-	-
0.1	0.010	0.019	0.005	0.025	-	-
0.2	0.020	0.029	0.015	0.035	-	-
0.3	0.030	0.039	0.025	0.045	0.45	0.23
0.4	0.040	0.049	0.035	0.060	0.70	0.35
0.5	0.050	0.069	0.045	0.085	1.4	0.7
0.7	0.070	0.099	0.060	0.125	2.5	1.3
1	0.100	0.149	0.085	0.175	6.8	3.4
1.5	0.150	0.199	0.125	0.225	9.5	4.8
2	0.200	0.249	0.175	0.275	17.7	8.9
2.5	0.250	0.299	0.225	0.325	21.0	10.5
3	0.300	0.349	0.275	0.375	26.8	13.4
3.5	0.350	0.399	0.325	0.450	39.0	18.5
4	0.400	0.499	0.375	0.550	50.8	25.4
5	0.500	0.599	0.450	0.650	63.5	31.8
6	0.600	0.699	0.550	0.750	-	-
7	0.700	0.799	0.650	0.850	-	-

Minimum breaking load. The minimum breaking load is determined over a simple knot formed by placing one end of a suture held in the right hand over the other end held in the left hand, passing one end over the suture and through the loop so formed (see Figure 0667.-1) and pulling the knot tight.

Carry out the test on five sutures. Submit sutures of length greater than 75 cm to two measurements and shorter sutures to one measurement. Determine the breaking load using a suitable tensilometer. The apparatus has two clamps for holding the suture, one of which is mobile and is driven at a constant rate of 25 cm to 30 cm per minute. The clamps are designed so that the suture being tested can be attached without any possibility of slipping. At the beginning of the test the length of suture between the clamps is 12.5 cm to 20 cm and the knot is midway between the clamps. Set the mobile clamp in motion and note the force required to break the suture. If the suture breaks in a clamp or within 1 cm of it, the result is discarded and the test repeated on another suture. The average of all the results excluding those legitimately

discarded is equal to or greater than the value given in column C in Table 0667.-1 and no individual result is less than that given in column D for the gauge number concerned.

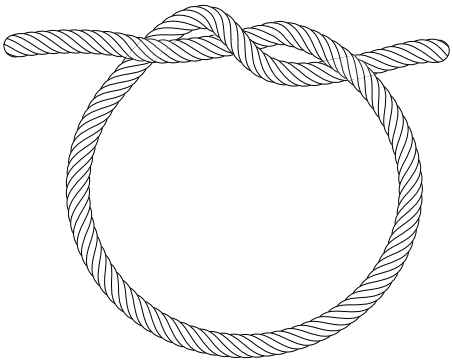

Figure 0667.-1. – *Simple knot*

Needle attachment. If the suture is supplied with an eyeless needle attached that is not stated to be detachable the attachment, it complies with the test for needle attachment. Carry out the test on five sutures. Use a suitable tensilometer, such as that described for the determination of the minimum breaking load. Fix the needle and suture (without knot) in the clamps of the apparatus in such a way that the swaged part of the needle is completely free of the clamp and in line with the direction of pull on the suture. Set the mobile clamp in motion and note the force required to break the suture or to detach it from the needle. The average of the five deter-minations and all individual values are not less than the respective values given in Table 0667.-2 for the gauge number concerned. If not more than one individual value fails to meet the individual requirement, repeat the test on an additional ten sutures. The attachment complies with the test if none of the ten values is less than the individual value in Table 0667.-2 for the gauge number concerned.

Table 0667.-2. – *Minimum strengths of needle attachment*

Gauge number	Mean value (newtons)	Individual value (newtons)
0.4	0.50	0.25
0.5	0.80	0.40
0.7	1.7	0.80
1	2.3	1.1
1.5	4.5	2.3
2	6.8	3.4
2.5	9.0	4.5
3	11.0	4.5
3.5	15.0	4.5
4	18.0	6.0
5	18.0	7.0

STORAGE (PACKAGING)

Sterile synthetic absorbable braided sutures are presented in a suitable sachet that maintains sterility and allows the withdrawal and use of the sutures in aseptic conditions. The sutures must be stored dry.

They are intended to be used only on the occasion when the sachet is first opened.

Sutures in their individual sachets (primary packaging) are kept in a protective cover (box) which maintains the physical and mechanical properties until the time of use.

The application of appropriate harmonised standards for packaging of medical devices may be considered in addition.

LABELLING

Reference may be made to the appropriate harmonised standards for the labelling of medical devices.

The details strictly necessary for the user to identify the product properly are indicated on or in each sachet (primary packaging) and on the protective cover (box) and include at least:

- gauge number,
- length in centimetres or metres,
- if appropriate, that the needle is detachable,
- name of the product,
- intended use (surgical absorbable suture),
- if appropriate, that the suture is coloured,
- the structure (braided).

01/2008:0666

SUTURES, STERILE SYNTHETIC ABSORBABLE MONOFILAMENT

Fila resorbilia synthetica monofilamenta sterilia

DEFINITION

Sterile synthetic absorbable monofilament sutures consist of sutures prepared from a synthetic polymer, polymers or copolymers which, when introduced into a living organism, are absorbed by that organism and cause no undue tissue irritation. They consist of completely polymerised material. They occur as monofilament sutures. The sutures may be treated to facilitate handling and they may be coloured.

Appropriate harmonised standards may be considered when assessing compliance with respect to origin and processing of raw materials and with respect to biocompatibility.

Sterile synthetic absorbable monofilament sutures are wound-closure devices. Being absorbable they serve to approximate tissue during the healing period and subsequently lose tensile strength by hydrolysis.

PRODUCTION

The appropriate harmonised standards may apply with respect to appropriate validated methods of sterilisation, environmental control during manufacturing, labelling and packaging.

It is essential for the effectiveness and the performance characteristics during use and during the functional lifetime of these sutures that the following physical properties are specified: consistent diameter, sufficient initial strength and firm needle attachment.

The requirements below have been established, taking into account stresses which occur during normal conditions of use. These requirements can be used to demonstrate that individual production batches of these sutures are suitable for wound closure according to usual surgical techniques.

TESTS

Carry out the following tests on the sutures in the state in which they are removed from the sachet.

Length. Measure the length of the suture without applying more tension than is necessary to keep it straight. The length of each suture is not less than 95 per cent of the length stated on the label and does not exceed 400 cm.

Diameter. Unless otherwise prescribed, measure the diameter by the following method, using five sutures in the condition in which they are presented. Use a suitable instrument cap-able of measuring with an accuracy of at least 0.002 mm and having a circular pressor foot 10 mm to 15 mm in diameter. The pressor foot and the moving parts attached to it are weighted so as to apply a total load of 100 ± 10 g to the suture

being tested. When making the measurements, lower the pressor foot slowly to avoid crushing the suture. Measure the diameter at intervals of 30 cm over the whole length of the suture. For a suture less than 90 cm in length, measure at three points approximately evenly spaced along the suture. During the measurement, submit the sutures to a tension not greater than that required to keep them straight. The average of the measurements carried out on the sutures being tested and not less than two-thirds of the measurements taken on each suture are within the limits given in the columns under A in Table 0666.-1 for the gauge number concerned. None of the measurements is outside the limits given in the columns under B in Table 0666.-1 for the gauge number concerned.

Table 0666.-1. – *Diameters and breaking loads*

Gauge number	Diameter (millimetres)				Breaking load (newtons)	
	A		B		C	D
	min.	max.	min.	max.		
0.5	0.050	0.094	0.045	0.125	1.4	0.7
0.7	0.095	0.149	0.075	0.175	2.5	1.3
1	0.150	0.199	0.125	0.225	6.8	3.4
1.5	0.200	0.249	0.175	0.275	9.5	4.7
2	0.250	0.339	0.225	0.375	17.5	8.9
3	0.340	0.399	0.325	0.450	26.8	13.4
3.5	0.400	0.499	0.375	0.550	39.0	18.5
4	0.500	0.570	0.450	0.600	50.8	25.4
5	0.571	0.610	0.500	0.700	63.5	31.8

Minimum breaking load. The minimum breaking load is determined over a simple knot formed by placing one end of a suture held in the right hand over the other end held in the left hand, passing one end over the suture and through the loop so formed (see Figure 0666.-1) and pulling the knot tight.

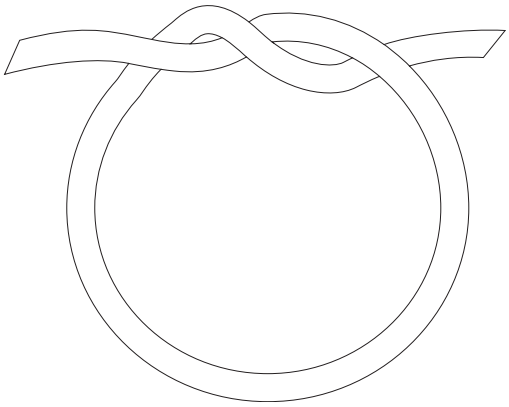

Figure 0666.-1. – *Simple knot*

Carry out the test on five sutures. Submit sutures of length greater than 75 cm to two measurements and shorter sutures to one measurement. Determine the breaking load using a suitable tensilometer. The apparatus has two clamps for holding the suture, one of which is mobile and is driven at a constant rate of 25 cm to 30 cm per minute. The clamps are designed so that the suture being tested can be attached without any possibility of slipping. At the beginning of the test the length of suture between the clamps is 12.5 cm to 20 cm and the knot is midway between the clamps. Set the mobile clamp in motion and note the force required to break the suture. If the suture breaks in a clamp or within 1 cm of it, the result is discarded and the test repeated on another suture. The average of all the results excluding those legitimately discarded is equal to or greater than the value given in column C in Table 0666.-1 and no individual result is less than that given in column D for the gauge number concerned.

Needle attachment. If the suture is supplied with an eyeless needle attached that is not stated to be detachable, the attachment complies with the test for needle attachment. Carry out the test on five sutures. Use a suitable tensilometer, such as that described for the determination of the minimum breaking load. Fix the needle and suture (without knot) in the clamps of the apparatus in such a way that the swaged part of the needle is completely free of the clamp and in line with the direction of pull on the suture. Set the mobile clamp in motion and note the force required to break the suture or to detach it from the needle. The average of the five determinations and all individual values are not less than the respective values given in Table 0666.-2 for the gauge number concerned. If not more than one individual value fails to meet the individual requirement, repeat the test on an additional ten sutures. The attachment complies with the test if none of the ten values is less than the individual value in Table 0666.-2 for the gauge number concerned.

Table 0666.-2. – *Minimum strengths of needle attachment*

Gauge number	Mean value (newtons)	Individual value (newtons)
0.5	0.80	0.40
0.7	1.7	0.80
1	2.3	1.1
1.5	4.5	2.3
2	6.8	3.4
2.5	9.0	4.5
3	11.0	4.5
3.5	15.0	4.5
4	18.0	6.0
5	18.0	7.0

STORAGE (PACKAGING)

Sterile synthetic absorbable monofilament sutures are presented in a suitable sachet that maintains sterility and allows the withdrawal and use of the sutures in aseptic conditions. The sutures must be stored dry.

They are intended to be used only on the occasion when the sachet is first opened.

Sutures in their individual sachets (primary packaging) are kept in a protective cover (box) which maintains the physical and mechanical properties until the time of use.

The application of appropriate harmonised standards for packaging of medical devices may be considered in addition.

LABELLING

Reference may be made to appropriate harmonised standards for the labelling of medical devices.

The details strictly necessary for the user to identify the product properly are indicated on or in each sachet (primary packaging) and on the protective cover (box) and include at least:

- gauge number,
- length in centimetres or metres,
- if appropriate, that the needle is detachable,
- name of the product,
- intended use (surgical absorbable suture),
- if appropriate, that the suture is coloured,
- the structure (monofilament).

01/2008:0660

CATGUT, STERILE, IN DISTRIBUTOR FOR VETERINARY USE

Chorda resorbilis sterilis in fuso ad usum veterinarium

DEFINITION

Sterile catgut in distributor for veterinary use consists of strands prepared from collagen taken from the intestinal membranes of mammals. After cleaning, the membranes are split longitudinally into strips of varying width, which, when assembled in small numbers, according to the diameter required, are twisted under tension, dried, polished, selected and sterilised. The strands may be treated with chemical substances such as chromium salts to prolong absorption and glycerol to make them supple, provided such substances do not reduce tissue acceptability.

The strand is presented in a distributor that allows the withdrawal and use of all or part of it in aseptic conditions. The design of the distributor is such that with suitable handling the sterility of the content is maintained even when part of the strand has been withdrawn. It may be stored dry or in a preserving liquid to which an antimicrobial preservative but not an antibiotic may be added.

TESTS

If stored in a preserving liquid, remove the strand from the distributor and measure promptly and in succession the length, diameter and breaking load. If stored in the dry state, immerse the strand in alcohol R or a 90 per cent *V/V* solution of *2-propanol R* for 24 h and proceed with the measurements as indicated above.

Length. Measure the length without applying to the strand more tension than is necessary to keep it straight. The length is not less than 95 per cent of the length stated on the label. If the strand consists of several sections joined by knots, the length of each section is not less than 2.5 m.

Diameter. Carry out the test using a suitable instrument capable of measuring with an accuracy of at least 0.002 mm and having a circular pressor foot 10 mm to 15 mm in diameter. The pressor foot and the moving parts attached to it are weighted so as to apply a total load of 100 ± 10 g to the strand being tested. When making the measurements, lower the pressor foot slowly to avoid crushing the strand. Make not fewer than one measurement per 2 m of length. If the strand consists of several sections joined by knots, make not fewer than three measurements per section. In any case make not fewer than twelve measurements. Make the measurements at points evenly spaced along the strand or along each section. The strand is not subjected to more tension than is necessary to keep it straight during measurement. The average of the measurements carried out on the strand being tested and not less than two-thirds of the individual measurements are within the limits given in the column under A in Table 0660.-1 for the gauge number concerned. None of the measurements is outside the limits given in the columns under B in Table 0660.-1 for the gauge number concerned.

Minimum breaking load. The minimum breaking load is determined over a simple knot formed by placing one end of a strand held in the right hand over the other end held in the left hand, passing one end over the strand and through the loop so formed (see Figure 0660.-1) and pulling the knot tight.

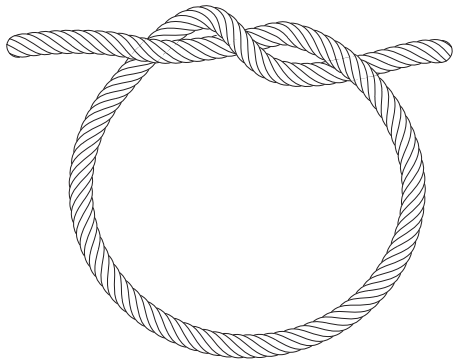

Figure 0660.-1. – *Simple knot*

Make not fewer than one measurement per 2 m of length. If the strand consists of several sections joined by knots, make not fewer than three measurements per section and, in any case, not fewer than one measurement per 2 m of length at points evenly spaced along the strand or along each section. Determine the breaking load using a suitable tensilometer. The apparatus has two clamps for holding the strand, one of which is mobile and is driven at a constant rate of 30 cm per minute. The clamps are designed so that the strand being tested can be attached without any possibility of slipping. At the beginning of the test the length of strand between the clamps is 12.5 cm to 20 cm and the knot is midway between the clamps. Set the mobile clamp in motion and note the force required to break the strand. If the strand breaks in a clamp or within 1 cm of it, the result is discarded and the test repeated on another part of the strand. The average of all the results, excluding those legitimately discarded, is equal to or greater than the value in column C and no value is less than that given in column D in Table 0660.-1 for the gauge number concerned.

Table 0660.-1. – *Diameters and breaking loads*

Gauge number	Diameter (millimetres)				Breaking load (newtons)	
	A		B		C	D
	min.	max.	min.	max.		
1	0.100	0.149	0.085	0.175	1.8	0.4
1.5	0.150	0.199	0.125	0.225	3.8	0.7
2	0.200	0.249	0.175	0.275	7.5	1.8
2.5	0.250	0.299	0.225	0.325	10	3.8
3	0.300	0.349	0.275	0.375	12.5	7.5
3.5	0.350	0.399	0.325	0.450	20	10
4	0.400	0.499	0.375	0.550	27.5	12.5
5	0.500	0.599	0.450	0.650	38.4	20.0
6	0.600	0.699	0.550	0.750	45.0	27.5
7	0.700	0.799	0.650	0.850	60.0	38.0
8	0.800	0.899	0.750	0.950	70.0	45.0

Soluble chromium compounds. Place 0.25 g in a conical flask containing 1 mL of *water R* per 10 mg of catgut. Stopper the flask, allow to stand at 37 ± 0.5 °C for 24 h, cool and decant the liquid. Transfer 5 mL to a small test tube and add 2 mL of a 10 g/L solution of *diphenylcarbazide R* in *alcohol R* and 2 mL of *dilute sulfuric acid R*. The solution is not more intensely coloured than a standard prepared at the same time using 5 mL of a solution containing 2.83 µg of *potassium dichromate R* per millilitre, 2 mL of *dilute sulfuric acid R* and 2 mL of a 10 g/L solution of *diphenylcarbazide R* in *alcohol R* (1 ppm of Cr).

Sterility (*2.6.1*). It complies with the test for sterility as applied to catgut and other surgical sutures. Carry out the test on three sections, each 30 cm long, cut off respectively from the beginning, the centre and the end of the strand.

STORAGE

Store protected from light and heat.

LABELLING

The label states:

- the gauge number,
- the length in centimetres or in metres.

01/2008:0608

LINEN THREAD, STERILE, IN DISTRIBUTOR FOR VETERINARY USE

Filum lini sterile in fuso ad usum veterinarium

DEFINITION

Sterile linen thread in distributor for veterinary use consists of the pericyclic fibres of the stem of *Linum usitatissimum* L. The elementary fibres, 2.5 cm to 5 cm long, are assembled in bundles 30 cm to 80 cm long and spun into continuous lengths of suitable diameter. The thread may be creamy-white or may be coloured with colouring matter authorised by the competent authority. The thread is sterilised.

IDENTIFICATION

A. Dissect the end of a thread, using a needle or fine tweezers, to isolate a few individual fibres. Examined under a microscope, the fibres are seen to be 12 µm to 31 µm wide and, along the greater part of their length, have thick walls, sometimes marked with fine longitudinal striations, and a narrow lumen. The fibres gradually narrow to a long, fine point. Sometimes there are unilateral swellings with transverse lines.

B. Impregnate isolated fibres with *iodinated zinc chloride solution R*. The fibres are coloured violet-blue.

TESTS

It complies with the tests prescribed in the monograph on *Strands, sterile non-absorbable, in distributor for veterinary use (0605)*.

If stored in a dry state, expose to an atmosphere with a relative humidity of 65 ± 5 per cent at 20 ± 2 °C for 4 h immediately before measuring the diameter and for the determination of minimum breaking load immerse in water R at room temperature for 30 min immediately before carrying out the test.

STORAGE

See the monograph on *Strands, sterile non-absorbable, in distributor for veterinary use (0605)*.

LABELLING

See the monograph on *Strands, sterile non-absorbable, in distributor for veterinary use (0605)*.

01/2008:0609

POLYAMIDE 6 SUTURE, STERILE, IN DISTRIBUTOR FOR VETERINARY USE

Filum polyamidicum-6 sterile in fuso ad usum veterinarium

DEFINITION

Sterile polyamide 6 suture in distributor for veterinary use is obtained by drawing through a suitable die a synthetic plastic material formed by the polymerisation of ε-caprolactam. It consists of smooth, cylindrical monofilaments or braided filaments, or lightly twisted strands sheathed with the same material. It may be coloured with colouring matter authorised by the competent authority. The suture is sterilised.

CHARACTERS

It is practically insoluble in the usual organic solvents; it is not attacked by dilute alkaline solutions (for example a 100 g/L solution of sodium hydroxide) but is attacked by dilute mineral acids (for example 20 g/L sulfuric acid), by hot glacial acetic acid and by 70 per cent *m/m* formic acid.

IDENTIFICATION

A. Heat about 50 mg with 0.5 mL of *hydrochloric acid R1* in a sealed glass tube at 110 °C for 18 h and allow to stand for 6 h. No crystals appear.

B. To about 50 mg add 10 mL of *hydrochloric acid R1*. The material disintegrates in the cold and dissolves completely within a few minutes.

C. It dissolves in a 70 per cent *m/m* solution of *anhydrous formic acid R*.

TESTS

It complies with the tests prescribed in the monograph on *Strands, sterile non-absorbable, in distributor for veterinary use (0605)* and with the following test:

Monomer and oligomers. In a continuous-extraction apparatus, treat 1.00 g with 30 mL of *methanol R* at a rate of at least three extractions per hour for 7 h. Evaporate the extract to dryness, dry the residue at 110 °C for 10 min, allow to cool in a desiccator and weigh. The residue weighs not more than 20 mg (2 per cent).

STORAGE

See the monograph on *Strands, sterile non-absorbable, in distributor for veterinary use (0605)*.

LABELLING

See the monograph on *Strands, sterile non-absorbable, in distributor for veterinary use (0605)*.

The label states whether the suture is braided, monofilament or sheathed.

01/2008:0610

POLYAMIDE 6/6 SUTURE, STERILE, IN DISTRIBUTOR FOR VETERINARY USE

Filum polyamidicum-6/6 sterile in fuso ad usum veterinarium

DEFINITION

Sterile polyamide 6/6 suture in distributor for veterinary use is obtained by drawing through a suitable die a synthetic plastic material formed by the polycondensation of hexamethylene-diamine and adipic acid. It consists of smooth, cylindrical monofilaments or braided filaments, or lightly twisted strands sheathed with the same material. It may be coloured with authorised colouring matter or pigments authorised by the competent authority. The suture is sterilised.

CHARACTERS

It is practically insoluble in the usual organic solvents; it is not attacked by dilute alkaline solutions (for example a 100 g/L solution of sodium hydroxide) but is attacked by dilute mineral acids (for example 20 g/L sulfuric acid), by hot glacial acetic acid and by 80 per cent *m/m* formic acid.

IDENTIFICATION

A. In contact with a flame it melts and burns, forming a hard globule of residue and gives off a characteristic odour resembling that of celery.

B. Place about 50 mg in an ignition tube held vertically and heat gently until thick fumes are evolved. When the fumes fill the tube, withdraw it from the flame and insert a strip of *nitrobenzaldehyde paper R*. A violet-brown colour slowly appears on the paper and fades slowly in air; it disappears immediately on washing with *dilute sulfuric acid R*.

C. To about 50 mg add 10 mL of *hydrochloric acid R1*. The material disintegrates in the cold and dissolves within a few minutes.

D. It does not dissolve in a 70 per cent *m/m* solution of *anhydrous formic acid R* but dissolves in an 80 per cent *m/m* solution of *anhydrous formic acid R*.

TESTS

It complies with the tests prescribed in the monograph on *Strands, sterile non-absorbable, in distributor for veterinary use (0605)*.

STORAGE

See the monograph on *Strands, sterile non-absorbable, in distributor for veterinary use (0605)*.

LABELLING

See the monograph on *Strands, sterile non-absorbable, in distributor for veterinary use (0605)*.

The label states whether the suture is braided, monofilament or sheathed.

01/2008:0607

POLY(ETHYLENE TEREPHTHALATE) SUTURE, STERILE, IN DISTRIBUTOR FOR VETERINARY USE

Filum ethyleni polyterephthalici sterile in fuso ad usum veterinarium

DEFINITION

Sterile poly(ethylene terephthalate) suture in distributor for veterinary use is obtained by drawing poly(ethylene terephthalate) through a suitable die. The suture is prepared by braiding very fine filaments in suitable numbers, depending on the gauge required. It may be whitish in colour, or may be coloured with authorised colouring matter or pigments authorised by the competent authority. The suture is sterilised.

CHARACTERS

It is practically insoluble in most of the usual organic solvents, but is attacked by strong alkaline solutions. It is incompatible with phenols.

IDENTIFICATION

A. It dissolves with difficulty when heated in *dimethylformamide R* and in *dichlorobenzene R*.

B. To about 50 mg add 10 mL of *hydrochloric acid R1*. The material remains intact even after immersion for 6 h.

TESTS

It complies with the tests prescribed in the monograph on *Strands, sterile non-absorbable, in distributor for veterinary use (0605)*.

STORAGE

See the monograph on *Strands, sterile non-absorbable, in distributor for veterinary use (0605)*.

LABELLING

See the monograph on *Strands, sterile non-absorbable, in distributor for veterinary use (0605)*.

01/2008:0606

SILK SUTURE, STERILE, BRAIDED, IN DISTRIBUTOR FOR VETERINARY USE

Filum bombycis tortum sterile in fuso ad usum veterinarium

DEFINITION

Sterile braided silk suture in distributor for veterinary use is obtained by braiding a variable number of threads, according to the diameter required, of degummed silk obtained from the cocoons of the silkworm *Bombyx mori* L. It may be coloured with colouring matter authorised by the competent authority. The suture is sterilised.

IDENTIFICATION

A. Dissect the end of a strand, using a needle or fine tweezers, to isolate a few individual fibres. The fibres are sometimes marked with very fine longitudinal striations parallel to the axis of the strand. Examined under a microscope, a cross-section is more or less triangular or semi-circular, with rounded edges and without a lumen.

B. Impregnate isolated fibres with *iodinated potassium iodide solution R*. The fibres are coloured pale yellow.

TESTS

It complies with the tests prescribed in the monograph on *Strands, sterile non-absorbable, in distributor for veterinary use (0605)*.

STORAGE

See the monograph on *Strands, sterile non-absorbable, in distributor for veterinary use (0605)*.

LABELLING

See the monograph on *Strands, sterile non-absorbable, in distributor for veterinary use (0605)*.

01/2008:0605

STRANDS, STERILE NON-ABSORBABLE, IN DISTRIBUTOR FOR VETERINARY USE

Fila non resorbilia sterilia in fuso ad usum veterinarium

DEFINITION

The statements in this monograph are intended to be read in conjunction with the individual monographs on sterile non-absorbable strands in distributor for veterinary use in the Pharmacopoeia. The requirements do not necessarily apply to sterile non-absorbable strands which are not the subject of such monographs.

Sterile non-absorbable strands in distributor for veterinary use are strands which, when introduced into a living organism, are not metabolised by that organism. Sterile non- absorbable strands vary in origin, which may be animal, vegetable or synthetic. They occur as cylindrical monofilaments or as multifilament strands. Multifilament strands consist of elementary fibres which are assembled by twisting, cabling or braiding. Such strands may be sheathed. Sterile non- absorbable strands may be treated to render them non-capillary, and they may be coloured with colouring matter or pigments authorised by the competent authority. The strands are sterilised.

They are presented in a suitable distributor that allows the withdrawal and use of all or part of the strand in aseptic conditions. The design of the distributor is such that with

suitable handling the sterility of the content is maintained even when part of the strand has been removed. They may be stored dry or in a preserving liquid to which an antimicrobial preservative but not an antibiotic may be added.

TESTS

Remove the strand from the distributor and measure promptly and in succession the length, diameter and minimum breaking load.

Length. Measure the length in the condition in which the strand is presented and without applying more tension than is necessary to keep it straight. The length of the strand is not less than 95 per cent of the length stated on the label.

Diameter. Unless otherwise prescribed, measure the diameter by the following method using the strand in the condition in which it is presented. Use a suitable instrument capable of measuring with an accuracy of at least 0.002 mm and having a circular pressor foot 10 mm to 15 mm in diameter. The pressor foot and the moving parts attached to it are weighted so as to apply a total load of 100 ± 10 g to the strand being tested. When making the measurements, lower the pressor foot slowly to avoid crushing the strand. Make not fewer than one measurement per 2 m of length and in any case not fewer than 12 measurements at points evenly spaced along the strand. During the measurement submit monofilament strands to a tension not greater than that required to keep them straight. Submit multifilament strands to a tension not greater than one-fifth of the minimum breaking load shown in column C of Table 0605.-1 appropriate to the gauge number and type of material concerned or 10 N whichever is less. For multifilament strands of gauge number above 1.5 make two measurements at each point, the second measurement being made after rotating the strand through 90°. The diameter of that point is the average of the two measurements. The average of the measurements carried out on the strand being tested and not less than two-thirds of the individual measurements are within the limits given in the columns under A in Table 0605.-1 for the gauge number concerned. None of the measurements is outside the limits given in the columns under B in Table 0605.-1 for the gauge number concerned.

Table 0605.-1. – *Diameters and minimum breaking loads*

Gauge number	Diameter (millimetres)				Minimum breaking load (newtons)			
	A		B		Linen thread		All other non-absorbable strands	
	min.	max.	min.	max.	C	D	C	D
0.5	0.050	0.069	0.045	0.085	-	-	1.0	0.35
0.7	0.070	0.099	0.060	0.125	1.0	0.3	1.5	0.60
1	0.100	0.149	0.085	0.175	2.5	0.6	3.0	1.0
1.5	0.150	0.199	0.125	0.225	5.0	1.0	5.0	1.5
2	0.200	0.249	0.175	0.275	8.0	2.5	9.0	3.0
2.5	0.250	0.299	0.225	0.325	9.0	5.0	13.0	5.0
3	0.300	0.349	0.275	0.375	11.0	8.0	15.0	9.0
3.5	0.350	0.399	0.325	0.450	15.0	9.0	22.0	13.0
4	0.400	0.499	0.375	0.550	18.0	11.0	27.0	15.0
5	0.500	0.599	0.450	0.650	26.0	15.0	35.0	22.0
6	0.600	0.699	0.550	0.750	37.0	18.0	50.0	27.0
7	0.700	0.799	0.650	0.850	50.0	26.0	62.0	35.0
8	0.800	0.899	0.750	0.950	65.0	37.0	73.0	50.0

Minimum breaking load. Unless otherwise prescribed, determine the minimum breaking load by the following method using the strand in the condition in which it is presented. The minimum breaking load is determined over a simple knot formed by placing one end of a strand held in the right hand over the other end held in the left hand, passing one end over the strand and through the loop so formed (see Figure 0605.-1) and pulling the knot tight.

Make not fewer than one measurement per 2 m of length at points evenly spaced along the strand. Determine the breaking load using a suitable tensilometer. The apparatus has two clamps for holding the strand, one of which is mobile and is driven at a constant rate of 30 cm per minute. The clamps are designed so that the strand being tested can be attached with-out any possibility of slipping. At the beginning of the test the length of strand between the clamps is 12.5 cm to 20 cm and the knot is midway between the clamps. Set the mobile clamp in motion and note the force required to break the strand. If the strand breaks in a clamp or within 1 cm of it, the result is discarded and the test repeated on another part of the strand. The average of all the results, excluding those legitimately dis-carded, is equal to or greater than the value in column C and no value is less than that given in column D in Table 0605.-1 for the gauge number and type of material concerned.

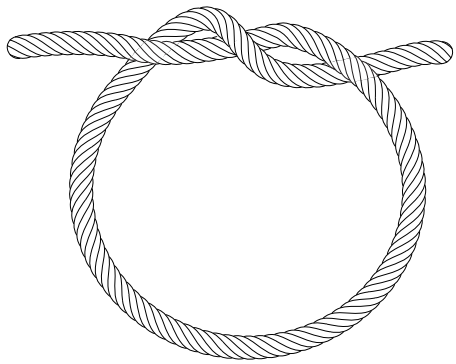

Figure 0605.-1. – *Simple knot*

Sterility (*2.6.1*). They comply with the test for sterility as applied to catgut and other surgical sutures. Carry out the test on three sections each 30 cm long, cut off respectively from the beginning, the centre and the end of the strand.

Extractable colour. Strands that are dyed and intended to remain so during use comply with the test for extractable colour. Place 0.25 g of the strand to be examined in a conical flask, add 25.0 mL of *water R* and cover the mouth of the flask with a short-stemmed funnel. Boil for 15 min, cool and adjust to the original volume with *water R*. Depending on the colour of the strand, prepare the appropriate reference solution as described in Table 0605.-2 using the primary colour solutions (*2.2.2*).

Table 0605.-2. – *Colour reference solutions*

Colour of strand	Composition of reference solution (parts by volume)			
	Red primary solution	Yellow primary solution	Blue primary solution	Water
Yellow - brown	0.2	1.2	–	8.6
Pink - red	1.0	–	–	9.0
Green - blue	–	–	2.0	8.0
Violet	1.6	–	8.4	–

The test solution is not more intensely coloured than the appropriate reference solution.

STORAGE

Store protected from light and heat.

Sutures

LABELLING

The label states:

- the gauge number,
- the length in centimetres or in metres,
- where appropriate, that the strand is coloured and intended to remain so during use.

01/2011:90029

INTRODUCTION

For practical purposes and for the convenience of users of the European Pharmacopoeia, monographs on herbal drugs and herbal drug preparations are brought together in the following section.

This is not an exhaustive list and it is not intended to provide a regulatory definition of herbal materials. It is based on the definitions in the general monographs Herbal drugs (1433) and Herbal drug preparations (1434) and is intended solely for the convenience of users.

01/2009:0307

ACACIA

Acaciae gummi

DEFINITION

Air-hardened, gummy exudate flowing naturally from or obtained by incision of the trunk and branches of *Acacia senegal* L. Willdenow, other species of *Acacia* of African origin and *Acacia seyal Del.*

CHARACTERS

Acacia is almost completely but very slowly soluble, after about 2 h, in twice its mass of water leaving only a very small residue of vegetable particles; the liquid obtained is colourless or yellowish, dense, viscous, adhesive, translucent and weakly acid to blue litmus paper. Acacia is practically insoluble in ethanol (96 per cent).

IDENTIFICATION

A. Acacia occurs as yellowish-white, yellow or pale amber, sometimes with a pinkish tint, friable, opaque, spheroidal, oval or reniform pieces (tears) of a diameter from about 1-3 cm, frequently with a cracked surface, easily broken into irregular, whitish or slightly yellowish angular fragments with conchoidal fracture and a glassy and transparent appearance. In the centre of an unbroken tear there is sometimes a small cavity.

B. Reduce to a powder (355) (*2.9.12*). The powder is white or yellowish-white. Examine under a microscope using a 50 per cent *V/V* solution of *glycerol R*. The powder shows the following diagnostic characters: angular, irregular, colourless, transparent fragments. Only traces of starch or vegetable tissues are visible. No stratified membrane is apparent.

C. Examine the chromatograms obtained in the test for glucose and fructose.

Results: the chromatogram obtained with the test solution shows 3 zones due to galactose, arabinose and rhamnose. No other important zones are visible, particularly in the upper part of the chromatogram.

D. Dissolve 1 g of the powdered herbal drug (355) (*2.9.12*) in 2 mL of *water R* by stirring frequently for 2 h. Add 2 mL of *ethanol (96 per cent) R*. After shaking, a white, gelatinous mucilage is formed which becomes fluid on adding 10 mL of *water R*.

TESTS

Solution S. Dissolve 3.0 g of the powdered herbal drug (355) (*2.9.12*) in 25 mL of *water R* by stirring for 30 min. Allow to stand for 30 min and dilute to 30 mL with *water R*.

Insoluble matter: maximum 0.5 per cent.

To 5.0 g of the powdered herbal drug (355) (*2.9.12*) add 100 mL of *water R* and 14 mL of *dilute hydrochloric acid R*, boil gently for 15 min, shaking frequently and filter while hot through a tared sintered-glass filter (*2.1.2*). Wash with hot *water R* and dry at 100-105 °C. The residue weighs a maximum of 25 mg.

Glucose and fructose. Thin-layer chromatography (*2.2.27*).

Test solution. To 0.100 g of the powdered herbal drug (355) (*2.9.12*) in a thick-walled centrifuge tube add 2 mL of a 100 g/L solution of *trifluoroacetic acid R*, shake vigorously to dissolve the forming gel, stopper the tube and heat the mixture at 120 °C for 1 h. Centrifuge the hydrolysate, transfer the clear supernatant carefully into a 50 mL flask, add 10 mL of *water R* and evaporate the solution to dryness under reduced pressure. To the resulting clear film add 0.1 mL of *water R* and 0.9 mL of *methanol R*. Centrifuge to separate the amorphous precipitate. Dilute the supernatant, if necessary, to 1 mL with *methanol R*.

Reference solution. Dissolve 10 mg of *arabinose R*, 10 mg of *galactose R*, 10 mg of *glucose R*, 10 mg of *rhamnose R* and 10 mg of *xylose R* in 1 mL of *water R* and dilute to 10 mL with *methanol R*.

Plate: *TLC silica gel plate R*.

Mobile phase: 16 g/L solution of *sodium dihydrogen phosphate R*, *butanol R*, *acetone R* (10:40:50 *V/V/V*).

Application: 10 µL as bands.

Development A: over a path of 10 cm.

Drying A: in a current of warm air for a few minutes.

Development B: over a path of 15 cm using the same mobile phase.

Drying B: at 110 °C for 10 min.

Detection: spray with *anisaldehyde solution R* and heat at 110 °C for 10 min.

Results: the chromatogram obtained with the reference solution shows 5 clearly separated coloured zones due to galactose (greyish-green or green), glucose (grey), arabinose (yellowish-green), xylose (greenish-grey or yellowish-grey) and rhamnose (yellowish-green), in order of increasing R_F value. The chromatogram obtained with the test solution shows no grey zone and no greyish-green zone between the zones corresponding to galactose and arabinose in the chromatogram obtained with the reference solution.

Starch, dextrin and agar. To 10 mL of solution S previously boiled and cooled add 0.1 mL of *0.05 M iodine*. No blue or reddish-brown colour develops.

Sterculia gum

A. Place 0.2 g of the powdered herbal drug (355) (*2.9.12*) in a 10 mL ground-glass-stoppered cylinder graduated in 0.1 mL. Add 10 mL of *ethanol (60 per cent V/V) R* and shake. Any gel formed occupies a maximum of 1.5 mL.

B. To 1.0 g of the powdered herbal drug (355) (*2.9.12*) add 100 mL of *water R* and shake. Add 0.1 mL of *methyl red solution R*. Not more than 5.0 mL of *0.01 M sodium hydroxide* is required to change the colour of the indicator.

Tannins. To 10 mL of solution S add 0.1 mL of *ferric chloride solution R1*. A gelatinous precipitate is formed, but neither the precipitate nor the liquid are dark blue.

Tragacanth. Examine the chromatograms obtained in the test for glucose and fructose.

Results: the chromatogram obtained with the test solution shows no greenish-grey or yellowish-grey zone corresponding to the zone of xylose in the chromatogram obtained with the reference solution.

Loss on drying (*2.2.32*): maximum 15.0 per cent, determined on 1.000 g of the powdered herbal drug (355) (*2.9.12*) by drying in an oven at 105 °C.

Total ash (*2.4.16*): maximum 4.0 per cent.

Microbial contamination

TAMC: acceptance criterion 10^4 CFU/g (*2.6.12*).

TYMC: acceptance criterion 10^2 CFU/g (*2.6.12*).

Absence of *Escherichia coli* (*2.6.13*).

Absence of *Salmonella* (*2.6.13*).

FUNCTIONALITY-RELATED CHARACTERISTICS

This section provides information on characteristics that are recognised as being relevant control parameters for one or more functions of the substance when used as an excipient (see chapter 5.15). This section is a non-mandatory part of the monograph and it is not necessary to verify the characteristics to demonstrate compliance. Control of these characteristics can however contribute to the quality of a medicinal product by improving the consistency of the manufacturing process and the performance of the medicinal product during use. Where control methods are cited, they are recognised as being suitable for the purpose, but other methods can also be used. Wherever results for a particular characteristic are reported, the control method must be indicated.

The following characteristic may be relevant for acacia used as a viscosity-increasing agent and/or suspending agent in aqueous preparations.

Apparent viscosity. Determine the dynamic viscosity using a capillary viscometer (*2.2.9*) or a rotating viscometer (*2.2.10*) on a 100 g/L solution of acacia (dried substance).

01/2012:2432

ACANTHOPANAX BARK

Acanthopanacis gracilistyli cortex

DEFINITION

Dried root bark of *Eleutherococcus gracilistylus* (W.W.Sm.) S.Y.Hu var. *nodiflorus* (Dunn) H.Ohashi (*Acanthopanax gracilistylus* W.W.Sm.) collected in summer and autumn.

IDENTIFICATION

A. The bark occurs in irregular quills, 5-15 cm long, 0.4-1.4 cm in diameter, about 2 mm thick. The outer surface is greyish-brown, with slightly twisted longitudinal wrinkles and transverse lenticel-like scars. The inner surface is pale yellow or greyish-yellow, with fine longitudinal striations. The texture is light, fragile, easily broken. The fracture is irregular, greyish-white.

B. Microscopic examination (*2.8.23*). The powder is greyish-white. Examine under a microscope using *chloral hydrate solution R*. The powder shows the following diagnostic characters: cluster crystals of calcium oxalate, 8-64 µm in diameter, sometimes included in crystal cells arranged in rows; cork cells, rectangular or polygonal, thin-walled, sometimes walls of cork cells of older barks unevenly thickened, slightly pitted; fragments of secretory canals containing colourless or pale yellow secretions. Examine under a microscope using a 50 per cent *V/V* solution of *glycerol R*. The powder shows abundant starch granules, simple, polygonal or subspherical, 2-8 µm in diameter, or compound with 2-10 components.

C. Examine the chromatogram obtained in the test for *Periploca sepium*.

Results: see below the sequence of zones present in the chromatograms obtained with the reference solution and the test solution. Furthermore, other faint zones may be present in the chromatogram obtained with the test solution.

Top of the plate	
———	———
Thymol: an orange zone	
———	———
Borneol: a brown zone	
	A broad pink zone
Reference solution	**Test solution**

TESTS

Periploca sepium. Thin-layer chromatography (*2.2.27*).

Test solution. To 0.3 g of the powdered herbal drug (355) (*2.9.12*) add 3 mL of *methanol R*, heat in a water-bath at 60 °C for 1 min and filter.

Reference solution. Dissolve 5 mg of *thymol R* and 8 mg of *borneol R* in 5 mL of *methanol R*.

Plate: *TLC silica gel plate R* (5-40 µm) [or *TLC silica gel plate R* (2-10 µm)].

Mobile phase: *ethyl acetate R*, *methylene chloride R* (2:98 *V/V*).

Application: 20 µL [or 1 µL] as bands of 10 mm [or 8 mm].

Development: over a path of 10 cm [or 6 cm].

Drying: in air.

Detection: treat with *anisaldehyde solution R*, heat at 105 °C for 5 min and examine in daylight.

Results: the chromatogram obtained with the test solution shows no intense coloured zones above the zone due to borneol in the chromatogram obtained with the reference solution.

Acanthopanax giraldii: the outer surface of the root bark must not be covered with scaly covering trichomes.

Loss on drying (*2.2.32*): maximum 12.0 per cent, determined on 1.000 g of the powdered herbal drug (355) (*2.9.12*) by drying in an oven at 105 °C for 2 h.

Total ash (*2.4.16*): maximum 12.0 per cent.

Ash insoluble in hydrochloric acid (*2.8.1*): maximum 2.0 per cent.

Extractable matter: minimum 16.0 per cent.

To 2.00 g of the powdered herbal drug (250) (*2.9.12*) add a mixture of 8 g of *water R* and 12 g of *ethanol (96 per cent) R* and allow to macerate for 2 h, shaking frequently. Filter, evaporate the filtrate to dryness on a water-bath *in vacuo* and dry in an oven at 100-105 °C for 2 h. The residue weighs a minimum of 320 mg.

01/2009:0310

AGAR

Agar

DEFINITION

Polysaccharides from various species of Rhodophyceae mainly belonging to the genus *Gelidium*. It is prepared by treating the algae with boiling water; the extract is filtered whilst hot, concentrated and dried.

CHARACTERS

Appearance: powder or crumpled strips 2-5 mm wide or sometimes flakes, colourless or pale yellow, translucent, somewhat tough and difficult to break, becoming more brittle on drying.

Mucilaginous taste.

IDENTIFICATION

A. Examine under a microscope. When mounted in *0.005 M iodine*, the strips or flakes are partly stained brownish-violet. Magnified 100 times, they show the following diagnostic characters: numerous minute, colourless, ovoid or rounded grains on an amorphous background; occasional brown, round or ovoid spores with a reticulated surface, measuring up to 60 µm, may be present. Reduce to a powder, if necessary. The powder is yellowish-white. Examine under a microscope using *0.005 M iodine*. The powder presents angular fragments with numerous grains similar to those seen in the strips and flakes; some of the fragments are stained brownish-violet.

B. Dissolve 0.1 g with heating in 50 mL of *water R*. Cool. To 1 mL of the mucilage carefully add 3 mL of *water R* so as to form 2 separate layers. Add 0.1 mL of *0.05 M iodine*. A dark brownish-violet colour appears at the interface. Mix. The liquid becomes pale yellow.

C. Heat 5 mL of the mucilage prepared for identification test B on a water-bath with 0.5 mL of *hydrochloric acid R* for 30 min. Add 1 mL of *barium chloride solution R1*. A white turbidity develops within 30 min.

D. Heat 0.5 g with 50 mL of *water R* on a water-bath until dissolved. Only a few fragments remain insoluble. During cooling, the solution gels between 35 °C and 30 °C. Heat the gel thus obtained on a water-bath; it does not liquefy below 80 °C.

TESTS

Swelling index (*2.8.4*): minimum 10 and within 10 per cent of the value stated on the label, determined on the powdered herbal drug (355) (*2.9.12*).

Insoluble matter: maximum 1.0 per cent.

To 5.00 g of the powdered herbal drug (355) (*2.9.12*) add 100 mL of *water R* and 14 mL of *dilute hydrochloric acid R*. Boil gently for 15 min with frequent stirring. Filter the hot liquid through a tared, sintered-glass filter (160) (*2.1.2*), rinse the filter with hot *water R* and dry at 100-105 °C. The residue weighs a maximum of 50 mg.

Gelatin. To 1.00 g add 100 mL of *water R* and heat on a water-bath until dissolved. Allow to cool to 50 °C. To 5 mL of this solution add 5 mL of *picric acid solution R*. No turbidity appears within 10 min.

Loss on drying (*2.2.32*): maximum 20.0 per cent, determined on 1.000 g of the powdered herbal drug (355) (*2.9.12*) by drying in an oven at 105 °C.

Total ash (*2.4.16*): maximum 5.0 per cent.

Microbial contamination

TAMC: acceptance criterion 10^3 CFU/g (*2.6.12*).

TYMC: acceptance criterion 10^2 CFU/g (*2.6.12*).

Absence of *Escherichia coli* (*2.6.13*).

Absence of *Salmonella* (*2.6.13*).

LABELLING

The label states the swelling index.

01/2008:2147
corrected 6.2

AGNUS CASTUS FRUIT

Agni casti fructus

DEFINITION

Whole, ripe, dried fruit of *Vitex agnus-castus* L.

Content: minimum 0.08 per cent of casticin ($C_{19}H_{18}O_8$; M_r 374.3) (dried drug).

IDENTIFICATION

A. Agnus castus fruit is oval or almost globular, with a diameter of up to 5 mm. The persistent calyx is greenish-grey, finely pubescent, ends in 4-5 short teeth and envelops 2/3 to 3/4 of the surface of the fruit. The blackish-brown fruit consists of a pericarp that becomes progressively sclerous up to the endocarp. The style scar is often visible. Some of the fruits may retain a stalk, about 1 mm long. A transverse section of the fruit shows 4 locules, each containing an elongated seed.

B. Reduce to a powder (355) (*2.9.12*). Examine under a microscope using *chloral hydrate solution R*. The powder shows the following diagnostic characters: fragments of the outer epidermis of the calyx composed of polygonal cells densely covered with short, bent or undulate, uni-, bi- or tri-cellular uniseriate covering trichomes; cells of the epicarp with thick walls and well-marked, large pits; isolated glandular trichomes with a unicellular stalk and a uni- or multi-cellular head; layers of parenchyma from the outer part of the mesocarp, some containing brown pigment, others extending into septa; fragments from the inner part of the mesocarp composed of thin-walled, pitted, sclerenchymatous cells and of typical isodiametric sclerous cells with very thick, deeply grooved walls and a narrow, stellate lumen; small brown cells of the endocarp; fragments of the testa containing areas of fairly large, thin-walled lignified cells with reticulate bands of thickening; numerous fragments of the endosperm composed of thin-walled parenchymatous cells containing aleurone grains and oil droplets.

C. Thin-layer chromatography (*2.2.27*).

Test solution. To 1.0 g of the powdered herbal drug (355) (*2.9.12*) add 10 mL of *methanol R*. Heat in a water-bath at 60 °C for 10 min. Allow to cool and filter.

Reference solution. Dissolve 0.5 mg of *aucubin R* and 1 mg of *agnuside R* in *methanol R* and dilute to 1.0 mL with the same solvent.

Plate: *TLC silica gel F_{254} plate R* (5-40 µm) [or *TLC silica gel F_{254} plate R* (2-10 µm)].

Mobile phase: *water R*, *methanol R*, *ethyl acetate R* (8:15:77 *V/V/V*).

Application: 10 µL [or 8 µL] as bands.

Development: over a path of 8 cm [or 5 cm].

Drying: in air.

Detection: spray with *formic acid R* and heat at 120 °C for 10 min; examine in daylight.

Results: see below the sequence of zones present in the chromatograms obtained with the reference solution and the test solution. Furthermore, other zones may be present in the chromatogram obtained with the test solution.

Top of the plate	
Agnuside: a blue zone	A blue zone (agnuside)
Aucubin: a blue zone	A blue zone (aucubin)
Reference solution	**Test solution**

TESTS

Foreign matter (*2.8.2*): maximum 3.0 per cent.

Other species of *Vitex*, in particular *Vitex negundo*. No fruit of other species with a much greater diameter is present.

Total ash (*2.4.16*): maximum 5.0 per cent.

Loss on drying (*2.2.32*): maximum 10.0 per cent, determined on 1.000 g of the powdered herbal drug (355) (*2.9.12*) by drying in an oven at 105 °C for 2 h.

Herbal drugs

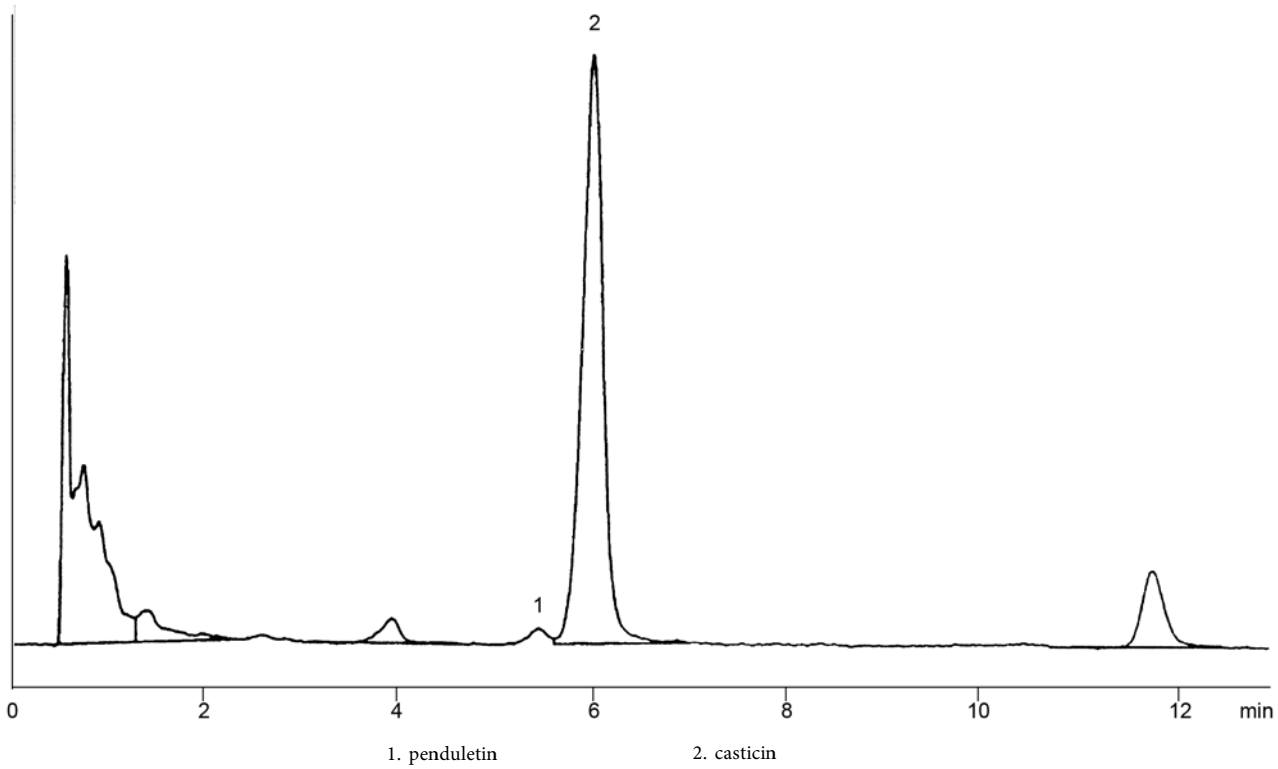

Figure 2147.-1. – *Chromatogram for the assay of casticin in Agnus castus fruit: test solution*

ASSAY

Liquid chromatography (*2.2.29*).

Test solution. Extract 1.000 g of the powdered herbal drug (355) (*2.9.12*) with 40 mL of *methanol R* for 2 min using a suitable-speed homogeniser. Collect the supernatant and filter into a 250 mL flask. Repeat the extraction with a further 40 mL of *methanol R*, collecting the supernatant and filtering as before. Rinse the residue carefully with a small quantity of *methanol R*. Combine the methanol extracts and rinsings and evaporate to dryness *in vacuo* in a water-bath at not more than 30 °C. With the aid of ultrasound, dissolve the residue obtained in *methanol R* and dilute to 20.0 mL with the same solvent. Filter the solution through a membrane filter (nominal pore size 0.45 µm). Dilute 1.0 mL to 10.0 mL with *methanol R*.

Reference solution. Dissolve 100.0 mg of *agnus castus fruit standardised dry extract CRS* in 20.0 mL of *methanol R* with the aid of ultrasound for 20 min, then dilute to 25.0 mL with the same solvent. Filter the solution through a membrane filter (nominal pore size 0.45 µm).

Column:

- *size*: *l* = 0.125 m, Ø = 3.0 mm;
- *stationary phase*: *octadecylsilyl silica gel for chromatography R* (3 µm);
- *temperature*: 25 °C.

Mobile phase:

- *mobile phase A*: 5.88 g/L solution of *phosphoric acid R*;
- *mobile phase B*: *methanol R*;

Time (min)	Mobile phase A (per cent *V/V*)	Mobile phase B (per cent *V/V*)
0 - 13	50 → 35	50 → 65
13 - 18	35 → 0	65 → 100
18 - 23	0 → 50	100 → 50

Flow rate: 1.0 mL/min.

Detection: spectrophotometer at 348 nm.

Injection: 10 µL.

System suitability: test solution:

- *resolution*: minimum 1.5 between the peaks due to penduletin and casticin (see Figure 2147.-1).

Calculate the percentage content of casticin using the following expression:

$$\frac{F_1 \times m_2 \times p_1 \times 8}{F_2 \times m_1}$$

F_1 = area of the peak due to casticin in the chromatogram obtained with the test solution;

F_2 = area of the peak due to casticin in the chromatogram obtained with the reference solution;

m_1 = mass of the herbal drug used to prepare the test solution, in grams;

m_2 = mass of *agnus castus fruit standardised dry extract CRS* used to prepare the reference solution, in grams;

p_1 = percentage content of casticin in *agnus castus fruit standardised dry extract CRS*.

01/2011:1587

AGRIMONY

Agrimoniae herba

DEFINITION

Dried flowering tops of *Agrimonia eupatoria* L.

Content: minimum 2.0 per cent of tannins, expressed as pyrogallol ($C_6H_6O_3$; M_r 126.1) (dried drug).

IDENTIFICATION

A. The stem is green or, more usually, reddish, cylindrical and infrequently branched. It is covered with long, erect or tangled hairs. The leaves are compound imparipennate with 3 or 6 opposite pairs of leaflets, with 2 or 3 smaller leaflets between. The leaflets are deeply dentate to serrate, dark green on the upper surface, greyish and densely tomentose on the lower face. The flowers are small and

Herbal drugs

form a terminal spike. They are pentamerous and borne in the axils of hairy bracts, the calyces closely surrounded by numerous terminal hooked spires, which occur on the rim of the hairy receptacle. The petals are free, yellow and deciduous. Fruit-bearing obconical receptacles, with deep furrows and hooked bristles, are usually present at the base of the inflorescence.

B. Reduce to a powder (355) (*2.9.12*). The powder is yellowish-green or grey. Examine under a microscope using *chloral hydrate solution R*. The powder shows the following diagnostic characters (Figure 1587.-1): numerous straight or bent, unicellular, long, thick-walled (about 500 µm) covering trichomes [Ab, Ca, F], finely warty, and sometimes spirally marked, often fragmented (F); fragments of the epidermis of the stems [A] with stomata [Aa], covering trichomes (Ab) and glandular trichomes [Ac]; fragments of upper leaf epidermis in surface view [C] with straight walls bearing covering trichomes (Ca), accompanied by palisade parenchyma [Cb], with some of the cells containing calcium oxalate prisms [Cc]; fragments of lower leaf epidermis in surface view [J] with sinuous walls and abundant stomata [Ja], mostly anomocytic (*2.8.3*) but occasionally anisocytic, and glandular trichomes [Jb]; ovoid to subspherical pollen grains, with 3 pores and a smooth exine [D]; glandular trichomes with a multicellular, uniseriate stalk and a unicellular to quadricellular head [B, Jb]; fragments of the stems [H] with groups of fibres [Ha] and parenchymatous cells, some of which contain cluster crystals of calcium oxalate [Hb]; small spiral vessels from the leaflets [G]; fragments of large, spiral or bordered-pitted vessels from the stem [E].

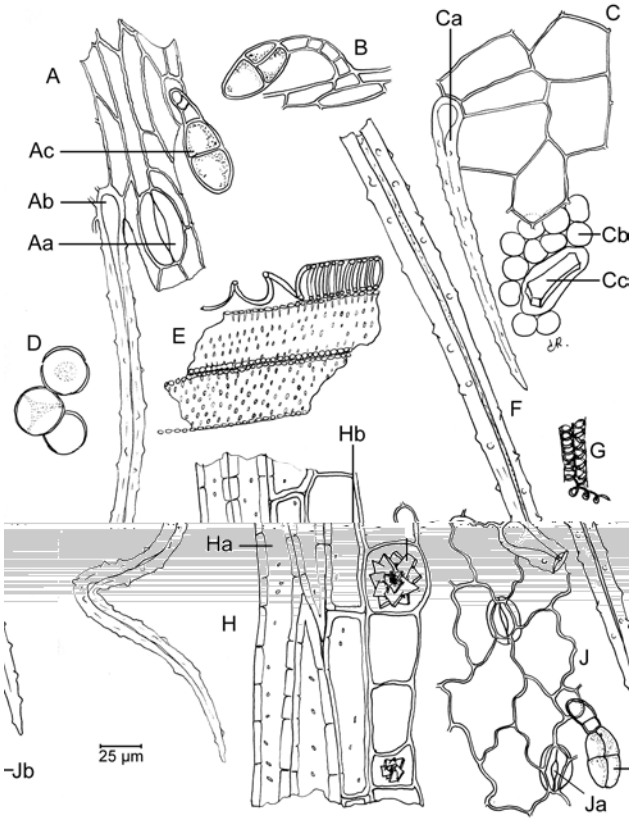

Figure 1587.-1. – *Illustration for identification test B of powdered herbal drug of agrimony*

C. Thin-layer chromatography (*2.2.27*).

Test solution. To 2.0 g of the powdered herbal drug (355) (*2.9.12*) add 20 mL of *methanol R*. Heat with shaking at 40 °C for 10 min. Filter.

Reference solution. Dissolve 1.0 mg of *isoquercitroside R* and 1.0 mg of *rutin R* in 2 mL of *methanol R*.

Plate: *TLC silica gel plate R*.

Mobile phase: *anhydrous formic acid R*, *water R*, *ethyl acetate R* (10:10:80 *V/V/V*).

Application: 10 µL as bands.

Development: over a path of 12 cm.

Drying: at 100-105 °C.

Detection: spray the still-warm plate with a 10 g/L solution of *diphenylboric acid aminoethyl ester R* in *methanol R* and then with a 50 g/L solution of *macrogol 400 R* in *methanol R*; allow the plate to dry in air for 30 min and examine in ultraviolet light at 365 nm.

Results: see below the sequence of zones present in the chromatograms obtained with the reference solution and the test solution.

Top of the plate	
	An orange fluorescent zone may be present (quercitroside)
Isoquercitroside: an orange fluorescent zone	An orange fluorescent zone (isoquercitroside)
	An orange fluorescent zone (hyperoside)
Rutin: an orange fluorescent zone	An orange fluorescent zone (rutin)
Reference solution	**Test solution**

TESTS

Loss on drying (*2.2.32*): maximum 10.0 per cent, determined on 1.000 g of the powdered herbal drug (355) (*2.9.12*) by drying in an oven at 105 °C for 2 h.

Total ash (*2.4.16*): maximum 10.0 per cent.

ASSAY

Tannins (*2.8.14*). Use 1.000 g of the powdered herbal drug (180) (*2.9.12*).

01/2008:1387
corrected 6.0

ALCHEMILLA

Alchemillae herba

DEFINITION

Whole or cut, dried, flowering, aerial parts of *Alchemilla vulgaris* L. *sensu latiore*.

Content: minimum 6.0 per cent of tannins, expressed as pyrogallol ($C_6H_6O_3$; M_r 126.1) (dried drug).

IDENTIFICATION

A. The greyish-green, partly brownish-green, radical leaves which are the main part of the drug are reniform or slightly semicircular with a diameter generally up to 8 cm, seldom up to 11 cm and have 7 to 9, or 11 lobes and a long petiole. The smaller, cauline leaves, which have a pair of large stipules at the base, have 5-9 lobes and a shorter petiole or they are sessile. The leaves are densely pubescent especially on the lower surface and have a coarsely serrated margin. Young leaves are folded with a whitish-silvery pubescence; older leaves are slightly pubescent and have a finely meshed venation, prominent on the lower surface. The greyish-green or yellowish-green petiole is pubescent, about 1 mm in diameter, with an adaxial groove. The apetalous flowers are yellowish-green or light green and about 3 mm in diameter. The calyx is double with 4 small segments of the epicalyx alternating with 4 larger sepals, subacute or triangular. They are 4 short stamens and a single carpel with a capitate stigma. The greyish-green or yellowish-green stem is pubescent, more or less longitudinally wrinkled and hollow.

B. Reduce to a powder (355) (*2.9.12*). The powder is greyish-green. Examine under a microscope using *chloral hydrate solution R*. The powder shows the following diagnostic characters: unicellular, narrow trichomes up to 1 mm long partly tortuous, acuminate, and bluntly pointed at the apex, with thick lignified walls, somewhat enlarged and pitted at the base; fragments of leaves with 2 layers of palisade parenchyma, the upper layer of which is 2-3 times longer than the lower layer and with spongy parenchyma, containing scattered cluster crystals of calcium oxalate, up to 25 µm in diameter; leaf fragments in surface view with sinuous or wavy epidermal cells, the anticlinal walls unevenly thickened and beaded, anomocytic stomata (*2.8.3*); groups of vascular tissue and lignified fibres from the petioles and stems, the vessels spirally thickened or with bordered pits; occasional thin-walled conical trichomes, about 300 µm long; thin-walled parenchyma containing cluster crystals of calcium oxalate; spherical pollen grains, about 15 µm in diameter, with 3 distinct pores and a granular exine; occasional fragments of the ovary wall with cells containing a single crystal of calcium oxalate.

C. Thin-layer chromatography (*2.2.27*).

Test solution. To 0.5 g of the powdered herbal drug (355) (*2.9.12*) add 5 mL of *methanol R* and heat in a water-bath at 70 °C under a reflux condenser for 5 min. Cool and filter.

Reference solution. Dissolve 1.0 mg of *caffeic acid R* and 1.0 mg of *chlorogenic acid R* in 10 mL of *methanol R*.

Plate: *TLC silica gel plate R*.

Mobile phase: *anhydrous formic acid R*, *water R*, *ethyl acetate R* (8:8:84 *V/V/V*).

Application: 20 µL of the test solution and 10 µL of the reference solution, as bands.

Development: over a path of 10 cm.

Drying: at 100-105 °C for 5 min.

Detection: spray with a 10 g/L solution of *diphenylboric acid aminoethyl ester R* in *methanol R*. Subsequently spray with a 50 g/L solution of *macrogol 400 R* in *methanol R*. Allow to dry in air for about 30 min. Examine in ultraviolet light at 365 nm.

Results: see below the sequence of the zones present in the chromatograms obtained with the reference solution and the test solution. Furthermore, other fluorescent zones may be present in the chromatogram obtained with the test solution.

Top of the plate	
	2 red fluorescent zones (chlorophyll)
Caffeic acid: a light blue florescent zone	1 or 2 intense light blue fluorescent zones
	One or several intense green or greenish-yellow fluorescent zones
Chlorogenic acid: a light blue fluorescent zone	An intense yellow or orange fluorescent zone
Reference solution	**Test solution**

TESTS

Loss on drying (*2.2.32*): maximum 10.0 per cent, determined on 1.000 g of the powdered herbal drug (355) (*2.9.12*) by drying in an oven at 105 °C for 2 h.

Total ash (*2.4.16*): maximum 12.0 per cent.

ASSAY

Tannins (*2.8.14*). Use 0.50 g of the powdered herbal drug (355) (*2.9.12*).

01/2008:0257
corrected 6.0

ALOES, BARBADOS

Aloe barbadensis

DEFINITION

Concentrated and dried juice of the leaves of *Aloe barbadensis* Miller.

Content: minimum 28.0 per cent of hydroxyanthracene derivatives, expressed as barbaloin ($C_{21}H_{22}O_9$; M_r 418.4) (dried drug).

CHARACTERS

Appearance: dark brown masses, slightly shiny or opaque with a conchoidal fracture, or brown powder.

Solubility: partly soluble in boiling water, soluble in hot ethanol (96 per cent).

IDENTIFICATION

A. Thin-layer chromatography (*2.2.27*).

Test solution. To 0.25 g of the powdered herbal drug add 20 mL of *methanol R* and heat to boiling in a water-bath. Shake for a few minutes and decant the solution. Store at about 4 °C and use within 24 h.

Reference solution. Dissolve 25 mg of *barbaloin R* in *methanol R* and dilute to 10 mL with the same solvent.

Plate: *TLC silica gel G plate R*.

Mobile phase: *water R*, *methanol R*, *ethyl acetate R* (13:17:100 *V/V/V*).

Application: 10 µL, as bands of 20 mm by maximum 3 mm.

Development: over a path of 10 cm.

Drying: in air.

Detection A: spray with a 100 g/L solution of *potassium hydroxide R* in *methanol R* and examine in ultraviolet light at 365 nm.

Results A: the chromatogram obtained with the test solution shows in the central part a yellow fluorescent zone (barbaloin) similar in position to the zone due to barbaloin in the chromatogram obtained with the reference solution and in the lower part a light blue fluorescent zone (aloesine).

Detection B: heat at 110 °C for 5 min.

Results B: in the chromatogram obtained with the test solution, a violet fluorescent zone appears just below the zone due to barbaloin.

B. Shake 1 g of the powdered herbal drug with 100 mL of boiling *water R*. Cool, add 1 g of *talc R* and filter. To 10 mL of the filtrate add 0.25 g of *disodium tetraborate R* and heat to dissolve. Pour 2 mL of this solution into 20 mL of *water R*. Yellowish-green fluorescence appears which is particularly marked in ultraviolet light at 365 nm.

C. To 5 mL of the filtrate obtained in identification test B add 1 mL of freshly prepared *bromine water R*. A brownish-yellow precipitate is formed and the supernatant is violet.

TESTS

Loss on drying (*2.2.32*): maximum 12.0 per cent, determined on 1.000 g of the powdered herbal drug by drying in an oven at 105 °C.

Total ash (*2.4.16*): maximum 2.0 per cent.

ASSAY

Carry out the assay protected from bright light.

Introduce 0.300 g of the powdered herbal drug (180) (*2.9.12*) into a 250 mL conical flask. Moisten with 2 mL of *methanol R*, add 5 mL of *water R* warmed to about 60 °C, mix, then add a

further 75 mL of *water R* at about 60 °C and shake for 30 min. Cool, filter into a volumetric flask, rinse the conical flask and filter with 20 mL of *water R*, add the rinsings to the volumetric flask and dilute to 1000.0 mL with *water R*. Transfer 10.0 mL of this solution to a 100 mL round-bottomed flask containing 1 mL of a 600 g/L solution of *ferric chloride R* and 6 mL of *hydrochloric acid R*. Heat in a water-bath under a reflux condenser for 4 h, with the water level above that of the liquid in the flask. Allow to cool, transfer the solution to a separating funnel, rinse the flask successively with 4 mL of *water R*, 4 mL of *1 M sodium hydroxide* and 4 mL of *water R* and add the rinsings to the separating funnel. Shake the contents of the separating funnel with 3 quantities, each of 20 mL, of *ether R*. Wash the combined ether layers with 2 quantities, each of 10 mL, of *water R*. Discard the washings and dilute the organic phase to 100.0 mL with *ether R*. Evaporate 20.0 mL of the solution carefully to dryness on a water-bath and dissolve the residue in 10.0 mL of a 5 g/L solution of *magnesium acetate R* in *methanol R*. Measure the absorbance (*2.2.25*) at 512 nm using *methanol R* as the compensation liquid.

Calculate the percentage content of hydroxyanthracene derivatives, as barbaloin, from the following expression:

$$\frac{A \times 19.6}{m}$$

i.e. taking the specific absorbance of barbaloin to be 255.

A = absorbance at 512 nm,

m = mass of the substance to be examined, in grams.

STORAGE

In an airtight container.

01/2008:0258
corrected 6.0

ALOES, CAPE

Aloe capensis

DEFINITION

Concentrated and dried juice of the leaves of various species of *Aloe*, mainly *Aloe ferox* Miller and its hybrids.

Content: minimum 18.0 per cent of hydroxyanthracene derivatives, expressed as barbaloin ($C_{21}H_{22}O_9$; M_r 418.4) (dried drug).

CHARACTERS

Appearance: dark brown masses tinged with green and having a shiny conchoidal fracture, or greenish-brown powder.

Solubility: partly soluble in boiling water, soluble in hot ethanol (96 per cent).

IDENTIFICATION

A. Examine the chromatograms obtained in the test for Barbados aloes.

   Results: the chromatogram obtained with the test solution shows in the central part a yellow fluorescent zone (barbaloin) similar in position to the zone due to barbaloin in the chromatogram obtained with the reference solution and in the lower part 2 yellow fluorescent zones (aloinosides A and B) and 1 blue fluorescent zone (aloesine).

B. Shake 1 g of the powdered herbal drug with 100 mL of boiling *water R*. Cool, add 1 g of *talc R* and filter. To 10 mL of the filtrate add 0.25 g of *disodium tetraborate R* and heat to dissolve. Pour 2 mL of the solution into 20 mL of *water R*. A yellowish-green fluorescence appears which is particularly marked in ultraviolet light at 365 nm.

C. To 5 mL of the filtrate obtained in identification test B add 1 mL of freshly prepared *bromine water R*. A yellow precipitate is formed. The supernatant is not violet.

TESTS

Barbados aloes. Thin-layer chromatography (*2.2.27*).

Test solution. To 0.25 g of the powdered herbal drug add 20 mL of *methanol R* and heat to boiling in a water-bath. Shake for a few minutes and decant the solution. Store at about 4 °C and use within 24 h.

Reference solution. Dissolve 25 mg of *barbaloin R* in *methanol R* and dilute to 10 mL with the same solvent.

Plate: *TLC silica gel G plate R*.

Mobile phase: *water R*, *methanol R*, *ethyl acetate R* (13:17:100 *V/V/V*).

Application: 10 µL, as bands of 20 mm by maximum 3 mm.

Development: over a path of 10 cm.

Drying: in air.

Detection: spray with a 100 g/L solution of *potassium hydroxide R* in *methanol R*. Heat at 110 °C for 5 min and examine in ultraviolet light at 365 nm.

Results: the chromatogram obtained with the test solution shows no violet fluorescent zone just below the zone due to barbaloin.

Loss on drying (*2.2.32*): maximum 10.0 per cent, determined on 1.000 g of the powdered herbal drug by drying in an oven at 105 °C.

Total ash (*2.4.16*): maximum 2.0 per cent.

ASSAY

Carry out the assay protected from bright light.

Introduce 0.400 g of the powdered herbal drug (180) (*2.9.12*) into a 250 mL conical flask. Moisten with 2 mL of *methanol R*, add 5 mL of *water R* warmed to about 60 °C, mix, then add a further 75 mL of *water R* at about 60 °C and shake for 30 min. Cool, filter into a volumetric flask, rinse the conical flask and filter with 20 mL of *water R*, add the rinsings to the volumetric flask and dilute to 1000.0 mL with *water R*. Transfer 10.0 mL of this solution to a 100 mL round-bottomed flask containing 1 mL of a 600 g/L solution of *ferric chloride R* and 6 mL of *hydrochloric acid R*. Heat in a water-bath under a reflux condenser for 4 h, with the water level above that of the liquid in the flask. Allow to cool, transfer the solution to a separating funnel, rinse the flask successively with 4 mL of *water R*, 4 mL of *1 M sodium hydroxide* and 4 mL of *water R* and add the rinsings to the separating funnel. Shake the contents of the separating funnel with 3 quantities, each of 20 mL, of *ether R*. Wash the combined ether layers with 2 quantities, each of 10 mL, of *water R*. Discard the washings and dilute the organic phase to 100.0 mL with *ether R*. Evaporate 20.0 mL of the solution carefully to dryness on a water-bath and dissolve the residue in 10.0 mL of a 5 g/L solution of *magnesium acetate R* in *methanol R*. Measure the absorbance (*2.2.25*) at 512 nm using *methanol R* as the compensation liquid.

Calculate the percentage content of barbaloin from the following expression:

$$\frac{A \times 19.6}{m}$$

i.e. taking the specific absorbance of hydroxyanthracene derivatives, as barbaloin, to be 255.

A = absorbance at 512 nm,

m = mass of the substance to be examined in grams.

STORAGE

In an airtight container.

Herbal drugs

01/2008:0259

ALOES DRY EXTRACT, STANDARDISED

Aloes extractum siccum normatum

DEFINITION

Standardised dry extract prepared from Barbados aloes or Cape aloes, or a mixture of both.

Content: 19.0 per cent to 21.0 per cent of hydroxyanthracene derivatives, expressed as barbaloin ($C_{21}H_{22}O_9$; M_r 418.4) adjusted, if necessary (dried extract).

PRODUCTION

The extract is produced from the herbal drug by a suitable procedure using boiling water.

CHARACTERS

Appearance: brown or yellowish-brown powder.

Solubility: sparingly soluble in boiling water.

IDENTIFICATION

A. Thin-layer chromatography (*2.2.27*).

Test solution. To 0.25 g of the extract to be examined add 20 mL of *methanol R* and heat to boiling in a water-bath. Shake for a few minutes and decant the solution. Store at about 4 °C and use within 24 h.

Reference solution. Dissolve 25 mg of *barbaloin R* in *methanol R* and dilute to 10 mL with the same solvent.

Plate: *TLC silica gel G plate R*.

Mobile phase: *water R*, *methanol R*, *ethyl acetate R* (13:17:100 *V/V/V*).

Application: 10 µL as bands of 20 mm by not more than 3 mm.

Development: over a path of 10 cm.

Drying: in air.

Detection: spray with a 100 g/L solution of *potassium hydroxide R* in *methanol R* and examine in ultraviolet light at 365 nm.

Results: the chromatogram obtained with the test solution shows, in the central part, a zone of yellow fluorescence (barbaloin) similar in position to the zone due to barbaloin in the chromatogram obtained with the reference solution and in the lower part, a zone of light blue fluorescence (aloesine). In the lower part of the chromatogram obtained with the test solution 2 zones of yellow fluorescence (aloinosides A and B) (Cape aloes) and a zone of violet fluorescence just below the zone due to barbaloin (Barbados aloes) may be present.

B. Shake 1 g with 100 mL of boiling *water R*. Cool, add 1 g of *talc R* and filter. To 10 mL of the filtrate add 0.25 g of *disodium tetraborate R* and heat to dissolve. Pour 2 mL of this solution into 20 mL of *water R*. A yellowish-green fluorescence appears which is particularly marked in ultraviolet light at 365 nm.

TESTS

Loss on drying (*2.8.17*): maximum 4.0 per cent *m/m*.

Total ash (*2.4.16*): maximum 2.0 per cent.

ASSAY

Carry out the assay protected from bright light.

Introduce 0.400 g into a 250 mL conical flask. Moisten with 2 mL of *methanol R*, add 5 mL of *water R* warmed to about 60 °C, mix, add a further 75 mL of *water R* at about 60 °C and shake for 30 min. Cool, filter into a volumetric flask, rinse the conical flask and the filter with 20 mL of *water R*, add the rinsings to the volumetric flask and dilute to 1000.0 mL with *water R*. Transfer 10.0 mL of this solution to a 100 mL round-bottomed flask containing 1 mL of a 600 g/L solution of *ferric chloride R* and 6 mL of *hydrochloric acid R*. Heat in a water-bath under a reflux condenser for 4 h, with the water level above that of the liquid in the flask. Allow to cool, transfer the solution to a separating funnel, rinse the flask successively with 4 mL of *water R*, 4 mL of *1 M sodium hydroxide* and 4 mL of *water R*, and add the rinsings to the separating funnel. Shake the contents of the separating funnel with 3 quantities, each of 20 mL, of *ether R*. Wash the combined ether layers with 2 quantities, each of 10 mL, of *water R*. Discard the washings and dilute the organic layer to 100.0 mL with *ether R*. Evaporate 20.0 mL carefully to dryness on a water-bath and dissolve the residue in 10.0 mL of a 5 g/L solution of *magnesium acetate R* in *methanol R*. Measure the absorbance (*2.2.25*) at 512 nm using *methanol R* as the compensation liquid.

Calculate the percentage content of hydroxyanthracene derivatives, expressed as barbaloin, using the following expression:

$$\frac{A \times 19.6}{m}$$

i.e. taking the specific absorbance of barbaloin to be 255.

A = absorbance at 512 nm;

m = mass of the substance to be examined, in grams.

01/2013:1857

ANGELICA ARCHANGELICA ROOT

Angelicae archangelicae radix

DEFINITION

Whole or cut, carefully dried rhizome and root of *Angelica archangelica* L. (syn. *A. officinalis* Hoffm.).

Content: minimum 2.0 mL/kg of essential oil (dried drug).

CHARACTERS

Bitter taste.

IDENTIFICATION

A. The rhizome is greyish-brown or reddish-brown, with transversely annulated thickenings. The base bears greyish-brown or reddish-brown, cylindrical, longitudinally furrowed, occasionally branched roots often with incompletely encircling, transverse ridges. The apex sometimes shows remnants of stem and leaf bases. The fracture is uneven. The transversely cut surface shows a greyish-white, spongy, distinctly radiate bark, in which the secretory channels are visible as brown spots, and a bright yellow or greyish-yellow wood which, in the rhizome, surrounds the greyish or brownish-white pith.

B. Microscopic examination (*2.8.23*). The powder is brownish-white. Examine under a microscope using *chloral hydrate solution R*. The powder shows the following diagnostic characters (Figure 1857.-1): fragments of cork consisting of several layers of thin-walled, greyish-brown or reddish-brown cells, in surface view [C] or in transverse section [E]; large, yellowish-brown secretory channels, whole or fragmented, in transverse section [A] or in longitudinal section [F]; fragments of medullary rays, 2 or 4 cells wide [G]; fragments of xylem [B] consisting of lignified vessels with reticulate thickening [Ba] occurring singly or in small groups, and unlignified parenchyma in which some of the cells associated with the vessels are collenchymatously thickened. Examine under a microscope using a 50 per cent *V/V* solution of *glycerol R*. The powder shows numerous, simple starch granules 2-4 µm in diameter, free or included in parenchyma cells [D].

Herbal drugs

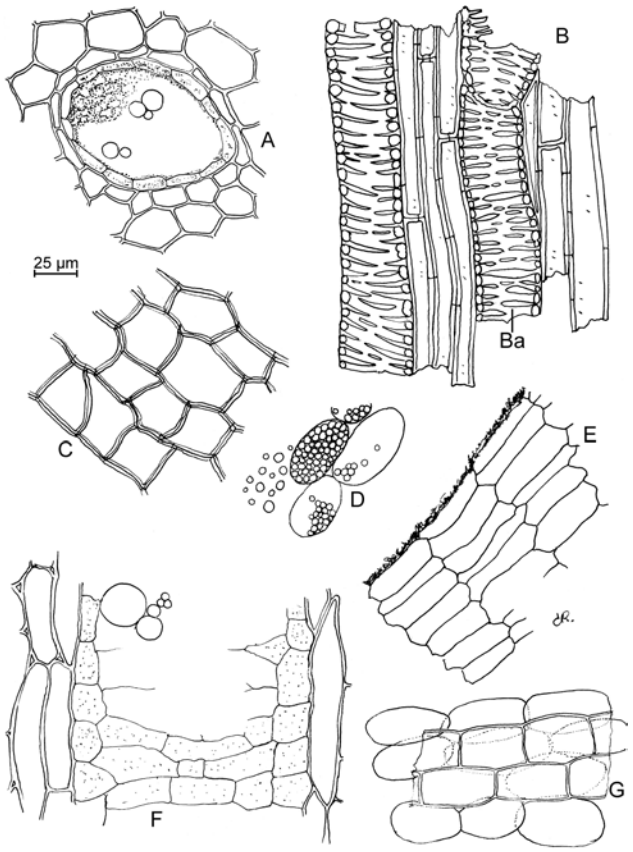

Figure 1857.-1. – *Illustration for identification test B of powdered herbal drug of angelica archangelica root*

C. Examine the chromatograms obtained in the test for other species of *Angelica*, *Levisticum* and *Ligusticum* described in the European Pharmacopoeia.

Results A: see below the sequence of zones present in the chromatograms obtained with the reference solution and the test solution. Furthermore, other faint fluorescent zones may be present in the chromatogram obtained with the test solution.

Top of the plate	
(*Z*)-Ligustilide: a bluish-white fluorescent zone	
———	———
Osthole: a blue fluorescent zone	A blue fluorescent zone
Imperatorin: a whitish fluorescent zone	A whitish fluorescent zone
	A blue fluorescent zone
———	———
	3 blue fluorescent zones
Reference solution	**Test solution**

Results B: see below the sequence of zones present in the chromatograms obtained with the reference solution and the test solution. Furthermore, other faint quenching zones may be present in the chromatogram obtained with the test solution.

Top of the plate	
(*Z*)-Ligustilide: a blue fluorescent zone	
———	———
Osthole: a quenching zone	A quenching zone
Imperatorin: a quenching zone	A quenching zone
	A quenching zone
———	———
	Several quenching zones
Reference solution	**Test solution**

TESTS

Other species of *Angelica*, *Levisticum* and *Ligusticum* described in the European Pharmacopoeia. Thin-layer chromatography (*2.2.27*).

Test solution. To 1 g of the freshly powdered herbal drug (355) (*2.9.12*) add 4 mL of *heptane R*, close and sonicate for 5 min. Centrifuge the mixture and use the supernatant.

Reference solution. Dissolve 1 mg of *imperatorin R*, 1 mg of *(Z)-ligustilide R* and 1 mg of *osthole R* in 10 mL of *methanol R*.

Plate: *TLC silica gel F_{254} plate R* (2-10 µm).

Mobile phase: *glacial acetic acid R*, *ethyl acetate R*, *toluene R* (1:10:90 *V/V/V*).

Application: 4 µL as bands of 8 mm.

Development: over a path of 6 cm.

Drying: in air.

Detection A: examine in ultraviolet light at 365 nm.

Results A: the chromatogram obtained with the test solution shows no zone at the position of (*Z*)-ligustilide in the chromatogram obtained with the reference solution.

Detection B: examine in ultraviolet light at 254 nm.

Results B: the chromatogram obtained with the test solution shows no zone at or just below the position of (*Z*)-ligustilide in the chromatogram obtained with the reference solution.

Foreign matter (*2.8.2*): maximum 5 per cent of leaf bases and stem bases, maximum 5 per cent of discoloured pieces and maximum 1 per cent of other foreign matter.

Loss on drying (*2.2.32*): maximum 10.0 per cent, determined on 1.000 g of the powdered herbal drug (355) (*2.9.12*) by drying in an oven at 105 °C for 2 h.

Total ash (*2.4.16*): maximum 10.0 per cent.

Ash insoluble in hydrochloric acid (*2.8.1*): maximum 2.0 per cent.

ASSAY

Essential oil (*2.8.12*). Reduce the herbal drug to a powder (500) (*2.9.12*) and immediately use 40.0 g for the determination. Use a 2 L round-bottomed flask, 10 drops of *liquid paraffin R*, 500 mL of *water R* as distillation liquid and 0.50 mL of *xylene R* in the graduated tube. Distil at a rate of 2-3 mL/min for 4 h.

01/2012:2556

ANGELICA DAHURICA ROOT

Angelicae dahuricae radix

DEFINITION

Dried, whole or fragmented root, with rootlets removed, of *Angelica dahurica* (Hoffm.) Benth. & Hook. f. ex Franch. & Sav. collected in summer or autumn.

Content: minimum 0.08 per cent of imperatorin ($C_{16}H_{14}O_4$; M_r 270.3) (dried drug).

Herbal drugs

IDENTIFICATION

A. The non-fragmented drug consists of conical roots, about 10-25 cm long and 1.5-2.5 cm in diameter. The root crown, more or less quadrangular, is obtuse and shows stem scars on prominences. It tapers to the tip. The outer surface is brownish-grey or yellowish-brown and clearly striated longitudinally, showing scars of the secondary roots and lenticel-like transverse protuberances, some of them arranged in 4 longitudinal rows. The texture is compact, hard and heavy. The fracture, white or whitish grey and mealy, is marked with concentric striations. The cambium occurs as a brown ring. Very many brown dots, corresponding to a transverse section of the secretory canals, are visible in the cortical part.

B. Microscopic examination (*2.8.23*). The powder is yellowish-white. Examine under a microscope using *chloral hydrate solution R*. The powder shows the following diagnostic characters: reticulate lignified vessels, free or in groups of 2 or 3 and accompanied by ligneous parenchyma cells with fine cellulose walls; numerous fragments of parenchyma with ovoid cells; a few orange cork fragments, consisting of several layers of superimposed cells; secretory canals, usually broken, with yellow or pale brown contents and oil droplets. Examine under a microscope using a 50 per cent *V/V* solution of *glycerol R*. The powder shows very many starch granules varying in size from 5 to 25 µm; some are simple and rounded, others consist of 2-8 elements, but most are polyhedral, either due to compound granules breaking up or to compression in the cells.

C. Examine the chromatograms obtained in the test for other officinal species of *Angelica*, *Levisticum* and *Ligusticum*.

Results A: see below the sequence of zones present in the chromatograms obtained with the reference solution and the test solution. Furthermore, other faint fluorescent zones may be present in the chromatogram obtained with the test solution.

Top of the plate	
(*Z*)-Ligustilide: a bluish-white fluorescent zone	A bluish-white fluorescent zone
———	———
	A whitish fluorescent zone
Osthole: a blue fluorescent zone	A blue fluorescent zone
Imperatorin: a whitish fluorescent zone	A whitish fluorescent zone (imperatorin)
———	———
Reference solution	**Test solution**

Results B: see below the sequence of zones present in the chromatograms obtained with the reference solution and the test solution. Furthermore, other faint quenching zones may be present in the chromatogram obtained with the test solution.

Top of the plate	
(*Z*)-Ligustilide: a blue fluorescent zone	A faint quenching zone
———	———
	A quenching zone
Osthole: a quenching zone	
Imperatorin: a quenching zone	A quenching zone (imperatorin)
———	———
Reference solution	**Test solution**

Results C: see below the sequence of zones present in the chromatograms obtained with the reference solution and the test solution. Furthermore, other faint zones may be present in the chromatogram obtained with the test solution.

Top of the plate	
	2 prominent reddish zones
(*Z*)-Ligustilide: a grey zone	
———	———
	A faint blue zone
Osthole: a violet zone	
Imperatorin: a grey zone	A yellow and violet double-zone
———	———
	A prominent violet zone
	A yellow zone
Reference solution	**Test solution**

TESTS

Other officinal species of *Angelica*, *Levisticum* and *Ligusticum*. Thin-layer chromatography (*2.2.27*).

Test solution. To 1 g of the powdered herbal drug (355) (*2.9.12*) add 4 mL of *heptane R*, close and sonicate for 5 min. Centrifuge the mixture and use the supernatant.

Reference solution. Dissolve 1 mg of *imperatorin R*, 1 mg of *(Z)-ligustilide R* and 1 mg of *osthole R* in 10 mL of *methanol R*.

Plate: *TLC silica gel F_{254} plate R* (2-10 µm).

Mobile phase: *glacial acetic acid R*, *ethyl acetate R*, *toluene R* (1:10:90 *V/V/V*).

Application: 4 µL as bands of 8 mm.

Development: over a path of 6 cm.

Drying: in air.

Detection A: examine in ultraviolet light at 365 nm.

Results A: the chromatogram obtained with the test solution shows no intense blue fluorescent zone below the position of imperatorin in the chromatogram obtained with the reference solution.

Detection B: examine in ultraviolet light at 254 nm.

Results B: the chromatogram obtained with the test solution shows no blue fluorescent zone corresponding to the zone due to (*Z*)-ligustilide in the chromatogram obtained with the reference solution; the chromatogram obtained with the test solution shows no quenching zone at the position of osthole or below the position of imperatorin in the chromatogram obtained with the reference solution.

Detection C: treat with a 10 per cent *V/V* solution of *sulfuric acid R* in *methanol R*, heat at 100 °C for 5 min and examine in daylight.

Results C: the chromatogram obtained with the test solution shows no violet zone corresponding to the zone due to osthole in the chromatogram obtained with the reference solution.

Loss on drying (*2.2.32*): maximum 12.0 per cent, determined on 1.000 g of the powdered herbal drug (355) (*2.9.12*) by drying in an oven at 105 °C for 2 h.

Total ash (*2.4.16*): maximum 6.0 per cent.

Ash insoluble in hydrochloric acid (*2.8.1*): maximum 1.5 per cent.

ASSAY

Liquid chromatography (*2.2.29*).

Test solution. Disperse 0.400 g of the powdered herbal drug (355) (*2.9.12*) in 45 mL of *methanol R* and sonicate for 1 h. Cool and dilute to 50.0 mL with *methanol R*. Filter through a membrane filter (nominal pore size 0.45 µm).

Reference solution (a). Dissolve 5.0 mg of *imperatorin CRS* in *methanol R* and dilute to 50.0 mL with the same solvent. Dilute 1.0 mL of the solution to 10.0 mL with *methanol R*.

Reference solution (b). Disperse 80 mg of *Angelica dahurica root HRS* in 9 mL of *methanol R* and sonicate for 1 h. Cool and dilute to 10 mL with *methanol R*. Filter through a membrane filter (nominal pore size 0.45 µm).

Precolumn:

- *size*: *l* = 4 mm, Ø = 4.0 mm;
- *stationary phase*: *octadecylsilyl silica gel for chromatography R* (5 µm).

Column:

- *size*: *l* = 0.125 m, Ø = 4.0 mm;
- *stationary phase*: *octadecylsilyl silica gel for chromatography R* (5 µm).

Mobile phase:

- *mobile phase A*: *water R*;
- *mobile phase B*: *acetonitrile R1*;

Time (min)	Mobile phase A (per cent *V/V*)	Mobile phase B (per cent *V/V*)
0 - 15	45	55
15 – 33	45 → 5	55 → 95
33 - 35	5	95

Flow rate: 1.0 mL/min.

Detection: spectrophotometer at 210 nm.

Injection: 20 µL.

Identification of peaks: use the chromatogram supplied with *Angelica dahurica root HRS* and the chromatogram obtained with reference solution (b) to identify the peak due to phellopterin.

Relative retention with reference to imperatorin (retention time = about 5 min): phellopterin = about 1.1.

System suitability: reference solution (b):

- *resolution*: minimum 1.5 between the peaks due to imperatorin and phellopterin.

Calculate the percentage content of imperatorin using the following expression:

$$\frac{A_1 \times m_2 \times p}{A_2 \times m_1 \times 10}$$

A_1 = area of the peak due to imperatorin in the chromatogram obtained with the test solution;

A_2 = area of the peak due to imperatorin in the chromatogram obtained with reference solution (a);

m_1 = mass of the herbal drug to be examined used to prepare the test solution, in grams;

m_2 = mass of *imperatorin CRS* used to prepare reference solution (a), in grams;

p = percentage content of imperatorin in *imperatorin CRS*.

01/2012:2557

ANGELICA PUBESCENS ROOT

Angelicae pubescentis radix

DEFINITION

Dried root, without rootlets, of *Angelica pubescens* Maxim. f. *biserrata* R.H.Shan et C.Q.Yuan, collected in early spring before sprouting, or in the end of autumn when stem and leaves wither.

Content: minimum 0.50 per cent of osthole ($C_{15}H_{16}O_3$; M_r 244.3) (dried drug).

IDENTIFICATION

A. The taproot is more or less cylindrical, branching rapidly into 2-3 or more principal roots at the lower part; the whole is about 5-30 cm long. The root crown is enlarged, with transverse, annulated wrinkles and measures about 0.5-4.5 cm in diameter; it shows the remains of stems, leaves or buds. The greyish-brown or dark brown outer surface is longitudinally wrinkled and shows slightly prominent rootlet scars and transverse lenticel-like protuberances. The fracture shows greyish-yellow bark, with abundant brown dots due to secretory canals; the cambium ring is brown and the wood is greyish-yellow or yellowish-brown.

B. Microscopic examination (*2.8.23*). The powder is yellowish-brown or brown. Examine under a microscope using *chloral hydrate solution R*. The powder shows the following diagnostic characters: fragments of lignified vessels up to 90 µm in diameter with spiral or reticulate thickenings, free or in groups of 2 or 3; fragments of phloem parenchyma with fine, sinuous fusiform cells, about 7-38 µm in diameter, with slightly thickened walls and fine, oblique criss-cross striations; orange-brown cork fragments, consisting of several layers of superimposed, somewhat polyhedral cells in surface view; secretory canals, usually broken, with yellow or pale brown contents and droplets of essential oil. Examine under a microscope using a 50 per cent *V/V* solution of *glycerol R*. The powder shows numerous small, rounded or ovoid, simple starch granules, about 10 µm in size, with a punctiform hilum that is visible on the largest granules; a few starch granules consisting of 2-10 components are also present.

C. Examine the chromatograms obtained in the test for other officinal species of *Angelica*, *Levisticum* and *Ligusticum*.

Results A: see below the sequence of zones present in the chromatograms obtained with the reference solution and the test solution. Furthermore, other faint fluorescent zones may be present in the chromatogram obtained with the test solution.

Top of the plate	
(*Z*)-Ligustilide: a bluish-white fluorescent zone	A bluish-white fluorescent zone
	A very faint whitish zone
Osthole: a blue fluorescent zone	A prominent blue fluorescent zone (osthole)
Imperatorin: a whitish fluorescent zone	A whitish fluorescent zone (may be missing)
	A blue fluorescent zone
	3 blue fluorescent zones
Reference solution	**Test solution**

Herbal drugs

Results B: see below the sequence of zones present in the chromatograms obtained with the reference solution and the test solution. Furthermore, other faint quenching zones may be present in the chromatogram obtained with the test solution.

Top of the plate	
(*Z*)-Ligustilide: a blue fluorescent zone	A faint quenching zone
Osthole: a quenching zone	A quenching zone (osthole)
	A blue fluorescent zone
Imperatorin: a quenching zone	A quenching zone (may be missing)
	2 or 3 quenching zones
Reference solution	**Test solution**

Results C: see below the sequence of zones present in the chromatograms obtained with the reference solution and the test solution. Furthermore, other faint zones may be present in the chromatogram obtained with the test solution.

Top of the plate	
	A prominent reddish zone
(*Z*)-Ligustilide: a grey zone	
Osthole: a violet zone	A violet zone (osthole)
Imperatorin: a grey zone	A violet zone (may be missing)
	A prominent violet zone
	A yellow zone
Reference solution	**Test solution**

TESTS

Other officinal species of *Angelica*, *Levisticum* and *Ligusticum*. Thin-layer chromatography (*2.2.27*).

Test solution. To 1 g of the powdered herbal drug (355) (*2.9.12*) add 4 mL of *heptane R*, close and sonicate for 5 min. Centrifuge the mixture and use the supernatant.

Reference solution. Dissolve 1 mg of *imperatorin R*, 1 mg of *(Z)-ligustilide R* and 1 mg of *osthole R* in 10 mL of *methanol R*.

Plate: *TLC silica gel F_{254} plate R* (2-10 µm).

Mobile phase: *glacial acetic acid R*, *ethyl acetate R*, *toluene R* (1:10:90 *V/V/V*).

Application: 4 µL as bands of 8 mm.

Development: over a path of 6 cm.

Drying: in air.

Detection A: examine in ultraviolet light at 365 nm.

Results A: the chromatogram obtained with the test solution shows no intense whitish fluorescent zone directly above the position of osthole and no blue fluorescent zone just below the position of imperatorin in the chromatogram obtained with the reference solution.

Detection B: examine in ultraviolet light at 254 nm.

Results B: the chromatogram obtained with the test solution shows no blue fluorescent zone corresponding to the zone due to (*Z*)-ligustilide in the chromatogram obtained with the reference solution.

Detection C: treat with a 10 per cent *V/V* solution of *sulfuric acid R* in *methanol R*, heat at 100 °C for 5 min and examine in daylight.

Results C: the chromatogram obtained with the test solution shows no zone corresponding to the zone due to (*Z*)-ligustilide in the chromatogram obtained with the reference solution.

Loss on drying (*2.2.32*): maximum 10.0 per cent, determined on 1.000 g of the powdered herbal drug (355) (*2.9.12*) by drying in an oven at 105 °C for 2 h.

Total ash (*2.4.16*): maximum 8.0 per cent.

Ash insoluble in hydrochloric acid (*2.8.1*): maximum 3.0 per cent.

ASSAY

Liquid chromatography (*2.2.29*).

Test solution. Disperse 0.500 g of the powdered herbal drug (355) (*2.9.12*) in 18 mL of *methanol R* and sonicate for 30 min. Cool and dilute to 20.0 mL with *methanol R*. Mix and filter. Dilute 5.0 mL of the filtrate to 20.0 mL with *methanol R*.

Reference solution (a). Dissolve 5.0 mg of *osthole CRS* in *methanol R* and dilute to 100.0 mL with the same solvent.

Reference solution (b). Disperse 0.250 g of *Angelica pubescens root HRS* in 9 mL of *methanol R* and sonicate for 30 min. Cool and dilute to 10.0 mL with *methanol R*. Mix and filter. Dilute 5.0 mL of the filtrate to 20.0 mL with *methanol R*.

Column:

- *size*: *l* = 0.125 m, Ø = 2.0 mm;
- *stationary phase*: *octadecylsilyl silica gel for chromatography R* (4 µm).

Mobile phase: *water R*, *acetonitrile R* (40:60 *V/V*).

Flow rate: 0.23 mL/min.

Detection: spectrophotometer at 322 nm.

Injection: 10 µL.

Retention time: osthole = about 8 min.

System suitability: reference solution (b):

- *resolution*: minimum 1.5 between the peak due to osthole and peak 2; use the chromatogram supplied with *Angelica pubescens root HRS* to identify peak 2.

Calculate the percentage content of osthole using the following expression:

$$\frac{A_1 \times m_2 \times p \times 0.8}{A_2 \times m_1}$$

A_1 = area of the peak due to osthole in the chromatogram obtained with the test solution;

A_2 = area of the peak due to osthole in the chromatogram obtained with reference solution (a);

m_1 = mass of the herbal drug to be examined used to prepare the test solution, in grams;

m_2 = mass of *osthole CRS* used to prepare reference solution (a), in grams;

p = percentage content of osthole in *osthole CRS*.

07/2012:2558

ANGELICA SINENSIS ROOT

Angelicae sinensis radix

DEFINITION

Smoke-dried, whole or fragmented root, with rootlets removed, of *Angelica sinensis* (Oliv.) Diels collected in late autumn.

Content: minimum 0.050 per cent of *trans*-ferulic acid ($C_{10}H_{10}O_4$; M_r 194.2) (dried drug).

IDENTIFICATION

A. Taproot branching rapidly into 10 or more conical principal roots; the whole is about 15-25 cm long. The annulated root crown is about 1.5-4 cm in diameter; its blunt, rounded tip shows the yellowish-green remains of stems and petioles of leaves. The outer surface is light brownish-yellow or dark brown, lumpy, irregularly striated longitudinally and shows scars of secondary roots and transversal lenticel-like markings. The branching roots have a thick upper part (0.3-1 cm in diameter) and a thin lower part. They are frequently twisted and show few scars of secondary roots. The texture is friable. The fracture, yellowish-white or yellowish-brown, shows a thick bark with some clefts and numerous brown dots due to secretory canals. The cambium occurs as a yellowish-brown ring. The wood is light coloured.

   The fragmented roots occur as long strips about 1.5-2 mm thick, 1.5-4 cm wide at the root crown and 10-15 cm long.

B. Microscopic examination (*2.8.23*). The powder is yellowish-white. Examine under a microscope using *chloral hydrate solution R*. The powder shows the following diagnostic characters: reticulate or scalariform lignified vessels up to 80 µm in diameter, free or in groups of 2 or 3 and accompanied by ligneous parenchyma cells with thick walls; numerous fragments of parenchyma with ovoid cells; orange cork fragments, consisting of several layers of superimposed cells, more or less rectangular in surface view; very small calcium oxalate prisms, visible in polarised light, in the cork; rare secretory canals, usually broken, with orange-yellow contents, up to 170 µm in diameter. Examine under a microscope using a 50 per cent *V/V* solution of *glycerol R*: the powder shows small (less than 10 µm), simple, rounded or ovoid starch granules, usually included in parenchyma cells.

C. Examine the chromatograms obtained in the test for other officinal species of *Angelica*, *Levisticum* and *Ligusticum*.

   Results A: see below the sequence of zones present in the chromatograms obtained with the reference solution and the test solution. Furthermore, other faint fluorescent zones may be present in the chromatogram obtained with the test solution.

Top of the plate	
(*Z*)-Ligustilide: a bluish-white fluorescent zone ——— Osthole: a blue fluorescent zone Imperatorin: a whitish fluorescent zone ———	A prominent bluish-white fluorescent zone ((*Z*)-ligustilide) ———
Reference solution	**Test solution**

   Results B: see below the sequence of zones present in the chromatograms obtained with the reference solution and the test solution. Furthermore, other faint quenching zones may be present in the chromatogram obtained with the test solution.

Top of the plate	
(*Z*)-Ligustilide: a blue fluorescent zone ——— Osthole: a quenching zone Imperatorin: a quenching zone ———	A prominent blue fluorescent zone ((*Z*)-ligustilide) A faint quenching zone ——— A faint quenching zone ———
Reference solution	**Test solution**

TESTS

Other officinal species of *Angelica*, *Levisticum* and *Ligusticum*. Thin-layer chromatography (*2.2.27*).

Test solution. To 1 g of the powdered herbal drug (355) (*2.9.12*) add 4 mL of *heptane R*, close and sonicate for 5 min. Centrifuge and use the supernatant.

Reference solution. Dissolve 1 mg of *(Z)-ligustilide R*, 1 mg of *imperatorin R* and 1 mg of *osthole R* in 10 mL of *methanol R*.

Plate: *TLC silica gel F_{254} plate R* (2-10 µm).

Mobile phase: *glacial acetic acid R*, *ethyl acetate R*, *toluene R* (1:10:90 *V/V/V*).

Application: 4 µL as bands of 8 mm.

Development: over a path of 6 cm.

Drying: in air.

Detection A: examine in ultraviolet light at 365 nm.

Results A: the chromatogram obtained with the test solution shows no intense blue fluorescent zone at or below the position of osthole in the chromatogram obtained with the reference solution.

Detection B: examine in ultraviolet light at 254 nm.

Results B: the chromatogram obtained with the test solution shows no quenching zone at or below the position of imperatorin in the chromatogram obtained with the reference solution.

Loss on drying (*2.2.32*): maximum 12.0 per cent, determined on 1.000 g of the powdered herbal drug (355) (*2.9.12*) by drying in an oven at 105 °C for 2 h.

Total ash (*2.4.16*): maximum 7.0 per cent.

Ash insoluble in hydrochloric acid (*2.8.1*): maximum 2.0 per cent.

ASSAY

Liquid chromatography (*2.2.29*).

Test solution. Disperse 0.200 g of the powdered herbal drug (355) (*2.9.12*) in 20.0 mL of a 70 per cent *V/V* solution of *methanol R* in a conical flask, stopper tightly and weigh. Heat under a reflux condenser for 30 min, cool and weigh again. Compensate the loss of solvent with a 70 per cent *V/V* solution of *methanol R*, mix well and allow to stand. Filter the supernatant through a membrane filter (nominal pore size 0.45 µm); use the filtrate.

Reference solution (a). In a brown-glass volumetric flask, dissolve 10.0 mg of *ferulic acid CRS* in a 70 per cent *V/V* solution of *methanol R* and dilute to 100.0 mL with the same solvent.

Reference solution (b). In order to prepare *cis*-ferulic acid *in situ*, introduce 2 mL of reference solution (a) into a transparent vial and expose to ultraviolet light at 254 nm for about 60 min.

Column:
- *size*: *l* = 0.150 m, Ø = 2.0 mm;
- *stationary phase*: *octadecylsilyl silica gel for chromatography R* (4 µm);
- *temperature*: 35 °C.

Mobile phase: *acetonitrile R*, 0.085 per cent *V/V* solution of *phosphoric acid R* (17:83 *V/V*).

Flow rate: 0.23 mL/min.

Detection: spectrophotometer at 316 nm.

Injection: 10 µL.

Retention time: *trans*-ferulic acid = about 13 min; *cis*-ferulic acid = about 14 min.

System suitability: reference solution (b):
- *resolution*: minimum 1.3 between the peaks due to *trans*-ferulic acid and *cis*-ferulic acid.

Calculate the percentage content of *trans*-ferulic acid using the following expression:

$$\frac{A_1 \times m_2 \times p}{A_2 \times m_1 \times 5}$$

A_1 = area of the peak due to *trans*-ferulic acid in the chromatogram obtained with the test solution;

A_2 = area of the peak due to *trans*-ferulic acid in the chromatogram obtained with reference solution (a);

m_1 = mass of the herbal drug to be examined used to prepare the test solution, in grams;

m_2 = mass of *ferulic acid CRS* used to prepare reference solution (a), in grams;

p = percentage content of *trans*-ferulic acid in *ferulic acid CRS*.

01/2008:0804
corrected 7.0

ANISE OIL

Anisi aetheroleum

DEFINITION

Essential oil obtained by steam distillation from the dry ripe fruits of *Pimpinella anisum* L.

CHARACTERS

Appearance: clear, colourless or pale yellow liquid.

IDENTIFICATION

First identification: B.

Second identification: A.

A. Thin-layer chromatography (*2.2.27*).

Test solution. Dissolve 1 g of the substance to be examined in *toluene R* and dilute to 10 mL with the same solvent.

Reference solution. Dissolve 10 µL of *linalol R*, 30 µL of *anisaldehyde R* and 200 µL of *anethole R* in *toluene R* and dilute to 15 mL with the same solvent. Dilute 1 mL of this solution to 5 mL with *toluene R*.

Plate: *TLC silica gel F_{254} plate R*.

Mobile phase: *ethyl acetate R*, *toluene R* (7:93 *V/V*).

Application: 5 µL as bands of 10 mm (for normal TLC plates) or 2 µL as bands of 10 mm (for fine particle size plates).

Development: over a path of 15 cm (for normal TLC plates) or over a path of 6 cm (for fine particle size plates).

Drying: in air.

Detection A: examine in ultraviolet light at 254 nm.

Results A: see below the sequence of zones present in the chromatograms obtained with the reference solution and the test solution. Furthermore, other zones may be present in the chromatogram obtained with the test solution.

Top of the plate	
Anethole: a quenching zone	A very strong quenching zone (anethole)
	A quenching zone
Anisaldehyde: a quenching zone	A quenching zone (anisaldehyde)
Reference solution	**Test solution**

Detection B: spray with *methyl 4-acetylbenzoate reagent R* and heat at 100-105 °C for 10 min; examine the still hot plate in daylight within 5 min.

Results B: see below the sequence of zones present in the chromatograms obtained with the reference solution and the test solution. Furthermore, other zones may be present in the chromatogram obtained with the test solution.

Top of the plate	
	A violet-brown zone (monoterpene hydrocarbons) (solvent front)
Anethole: a brown zone	A very strong brown zone (anethole), distinctly separated
	A grey zone
Anisaldehyde: a yellow zone	A yellow zone (anisaldehyde)
Linalol: a grey zone	A grey zone (linalol)
	A grey zone
Reference solution	**Test solution**

B. Examine the chromatograms obtained in the test for chromatographic profile.

Results: the characteristic peaks in the chromatogram obtained with the test solution are similar in retention time to those in the chromatogram obtained with the reference solution.

TESTS

Relative density (*2.2.5*): 0.980 to 0.990.

Refractive index (*2.2.6*): 1.552 to 1.561.

Freezing point (*2.2.18*): 15 °C to 19 °C.

Fenchone. Gas chromatography (*2.2.28*) as described in the test for chromatographic profile with the following modifications.

Test solution. Dissolve 400 µL of the substance to be examined in 2.0 mL of *hexane R*.

Reference solution (a). Dilute 10 µL of *fenchone R* to 1.2 g with *hexane R*.

Reference solution (b). Dilute 100 µL of reference solution (a) to 100 mL with *hexane R*.

System suitability: reference solution (b):
- *signal-to-noise ratio*: minimum 10 for the principal peak.

Limit:
- *fenchone*: maximum 0.01 per cent.

Foeniculin. Gas chromatography (*2.2.28*) as described in the test for chromatographic profile with the following modifications.

Test solution. The substance to be examined.

Herbal drugs

Reference solution (a). Dilute 10 mg of the test solution to 1.000 g with *hexane R*. Dilute 0.5 mL of this solution to 100 mL with *hexane R*.

Reference solution (b). Foeniculin for peak identification CRS.

System suitability:

- the chromatogram obtained with reference solution (b) is similar to the chromatogram provided with *foeniculin for peak identification CRS*,
- *signal-to-noise ratio*: minimum 10 for the principal peak in the chromatogram obtained with reference solution (a).

Limit: locate the peak due to foeniculin by comparison with the chromatogram provided with *foeniculin for peak identification CRS*.

- *foeniculin*: maximum 0.01 per cent.

Fatty oils and resinified essential oils (*2.8.7*). It complies with the test for fatty oils and resinified essential oils.

Chromatographic profile. Gas chromatography (*2.2.28*): use the normalisation procedure.

Test solution. Dissolve 200 µL of the substance to be examined in 1.0 mL of *hexane R*.

Reference solution. To 1.0 mL of *hexane R*, add 20 µL of *linalol R*, 20 µL of *estragole R*, 20 µL of *α-terpineol R*, 60 µL of *anethole R* and 30 µL of *anisaldehyde R*.

Column:

- *material*: fused silica,
- *size*: *l* = 30 m, Ø = 0.25 mm,
- *stationary phase*: *macrogol 20 000 R* (film thickness 0.25 µm).

Carrier gas: *helium for chromatography R*.

Flow rate: 1.0 mL/min.

Split ratio: 1:100.

Temperature:

	Time (min)	Temperature (°C)
Column	0 – 5	60
	5 – 80	60 → 210
	80 – 95	210
Injection port		200
Detector		220

Detection: flame ionisation.

Injection: 0.2 µL.

Elution order: order indicated in the composition of the reference solution. Record the retention times of these substances.

System suitability: reference solution:

- *resolution*: minimum 1.5 between the peaks due to estragole and α-terpineol.

Using the retention times determined from the chromatogram obtained with the reference solution, locate the components of the reference solution in the chromatogram obtained with the test solution and locate *cis*-anethole and pseudoisoeugenyl 2-methylbutyrate using the chromatogram shown in Figure 0804.-1 (disregard any peak due to hexane).

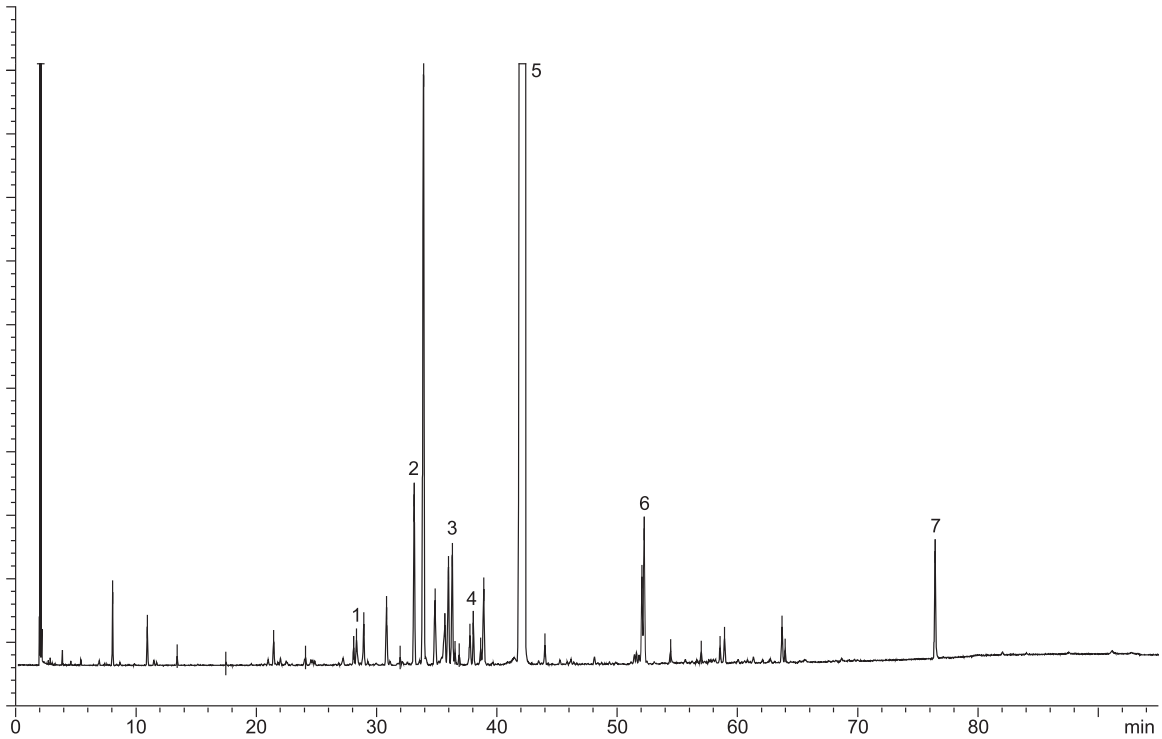

1. linalol
2. estragole
3. α-terpineol
4. *cis*-anethole
5. *trans*-anethole
6. anisaldehyde
7. pseudoisoeugenyl 2-methylbutyrate

Figure 0804.-1. – *Chromatogram for the test for chromatographic profile of anise oil*

Herbal drugs

Determine the percentage content of these components. The percentages are within the following ranges:

- *linalol*: maximum 1.5 per cent,
- *estragole*: 0.5 per cent to 5.0 per cent,
- *α-terpineol*: maximum 1.2 per cent,
- *cis-anethole*: 0.1 per cent to 0.4 per cent,
- *trans-anethole*: 87 per cent to 94 per cent,
- *anisaldehyde*: 0.1 per cent to 1.4 per cent,
- *pseudoisoeugenyl 2-methylbutyrate*: 0.3 per cent to 2.0 per cent.

STORAGE

At a temperature not exceeding 25 °C.

01/2012:0262

ANISEED

Anisi fructus

DEFINITION

Whole, dry cremocarp of *Pimpinella anisum* L.

Content: minimum 20 mL/kg of essential oil (anhydrous drug).

CHARACTERS

Reminiscent odour of anethole.

The fruit is a cremocarp and generally entire; a small fragment of the thin, rigid, slightly curved pedicel is frequently attached.

IDENTIFICATION

A. The cremocarp is ovoid or pyriform and slightly compressed laterally, yellowish-green or greenish-grey, 3-5 mm long and up to 3 mm wide, surmounted by a stylopod with 2 short, reflexed stylar points. The mericarps are attached by their tops to the carpophore with a plane commissural surface and a convex dorsal surface, the latter being covered with short, warty trichomes visible using a lens; each mericarp shows 5 primary ridges, running longitudinally, comprising 3 dorsal ridges and 2 lateral ridges, non-prominent, and lighter in colour.

B. Microscopic examination (*2.8.23*). The powder is greenish-yellow or brownish-green. Examine under a microscope using *chloral hydrate solution R*. The powder shows the following diagnostic characters (Figure 0262.-1): fragments of epicarp in surface view [D] with a striated cuticle, occasional anomocytic stomata (*2.8.3*) [Da], bases of covering trichomes [Dc] and whole covering trichomes [Db], mostly unicellular, sometimes curved, with a blunt apex and a warty cuticle; isolated fragments of covering trichomes [E]; fragments [H] of numerous narrow, branched vittae [Ha], often accompanied by elongated cells of the commissural surface [Hb]; fragments of testa [B] consisting of a layer of brown, polyhedral, thin-walled cells; fragments of endosperm [G] containing oil droplets [Ga], aleurone grains and small cluster crystals of calcium oxalate [Gb]; oblong sclereids from the mesocarp [C] or the commissural surface of the fruit; bundles of short sclerenchymatous fibres [A] from the carpophore and the pedicel [Ab], accompanied by vessels with spiral or annular thickening [Aa, F].

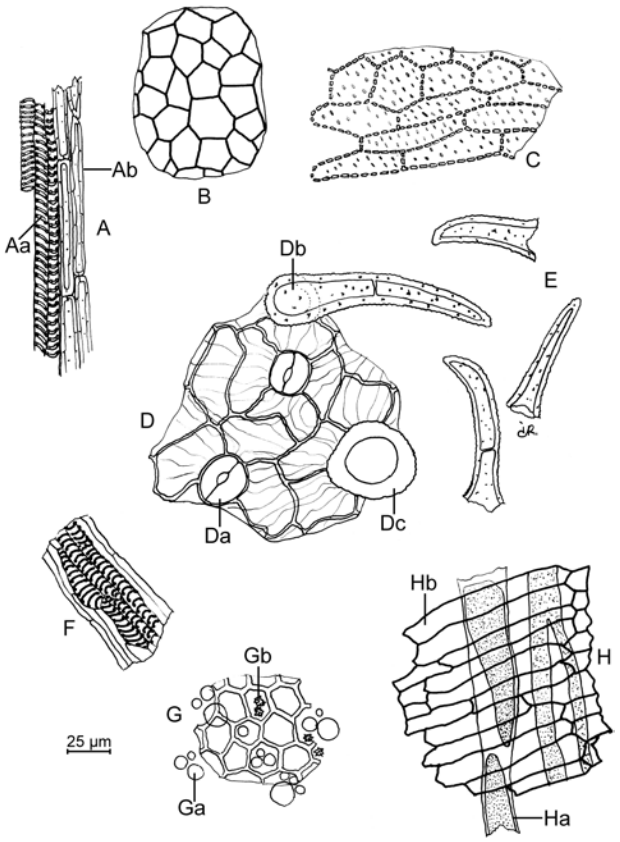

Figure 0262.-1. – *Illustration for identification test B of powdered herbal drug of aniseed*

C. Thin-layer chromatography (*2.2.27*).

Test solution. Shake 0.10 g of the powdered herbal drug (1400) (*2.9.12*) with 2 mL of *methylene chloride R* for 15 min. Filter and carefully evaporate the filtrate to dryness on a water-bath at 60 °C. Dissolve the residue in 0.5 mL of *toluene R*.

Reference solution. Dissolve 3 µL of *anethole R* and 40 µL of *olive oil R* in 1 mL of *toluene R*.

Plate: *TLC silica gel GF_{254} plate R*.

Mobile phase: *toluene R*.

Application: 2 µL and 3 µL of the test solution, then 1 µL, 2 µL and 3 µL of the reference solution, at 2 cm intervals.

Development: over a path of 10 cm.

Drying: in air.

Detection A: examine in ultraviolet light at 254 nm.

Results A: the chromatograms show a quenching zone (anethole) in the central part against a light background.

Detection B: spray with a freshly prepared 200 g/L solution of *phosphomolybdic acid R* in *ethanol (96 per cent) R*, using 10 mL for a 200 mm square plate, and heat at 120 °C for 5 min.

Results B: the spots due to anethole appear blue against a yellow background. In the chromatogram obtained with 2 µL of the test solution, the spot due to anethole is intermediate in size between the corresponding spots in the chromatograms obtained with 1 µL and 3 µL of the reference solution. The chromatograms obtained with the test solution show in the lower third a blue spot (triglycerides) similar in position to the spot in the lower third of the chromatograms obtained with the reference solution (triglycerides of olive oil).

TESTS

Water (*2.2.13*): maximum 70 mL/kg, determined on 20.0 g of the powdered herbal drug.

Total ash (*2.4.16*): maximum 12.0 per cent.

Ash insoluble in hydrochloric acid (*2.8.1*): maximum 2.5 per cent.

ASSAY

Essential oil (*2.8.12*). Use 10.0 g of the herbal drug reduced to a coarse powder immediately before the determination, a 250 mL round-bottomed flask, and 100 mL of *water R* as the distillation liquid. Place 0.50 mL of *xylene R* in the graduated tube. Distil at a rate of 2.5-3.5 mL/min for 2 h.

01/2012:1391

ARNICA FLOWER

Arnicae flos

DEFINITION

Whole or partially broken, dried flower-heads of *Arnica montana* L.

Content: minimum 0.40 per cent *m/m* of total sesquiterpene lactones, expressed as dihydrohelenalin tiglate (dried drug).

CHARACTERS

Aromatic odour.

The capitulum, when spread out, is about 20 mm in diameter and about 15 mm deep, and has a peduncle 2-3 cm long. The involucre consists of 18-24 elongated lanceolate bracts, with acute apices, arranged in 1-2 rows: the bracts, about 8-10 mm long, are green with yellowish-green external hairs visible under a lens. The receptacle, about 6 mm in diameter, is convex, alveolate and covered with hairs. Its periphery bears about 20 ligulate florets 20-30 mm long; the disc bears a greater number of tubular florets about 15 mm long. The ovary, 4-8 mm long, is crowned by a pappus of whitish bristles 4-8 mm long. Some brown achenes, crowned or not by a pappus, may be present.

IDENTIFICATION

A. The involucre consists of elongated oval bracts with acute apices; the margin is ciliated. The ligulate floret has a reduced calyx crowned by fine, shiny, whitish bristles, bearing small coarse trichomes. The orange-yellow corolla bears 7-10 parallel veins and ends in 3 small lobes. The stamens, with free anthers, are incompletely developed. The narrow, brown ovary bears a stigma divided into 2 branches curving outwards. The tubular floret is actinomorphic. The ovary and the calyx are similar to those of the ligulate floret. The short corolla has 5 reflexed triangular lobes; the 5 fertile stamens are fused at the anthers.

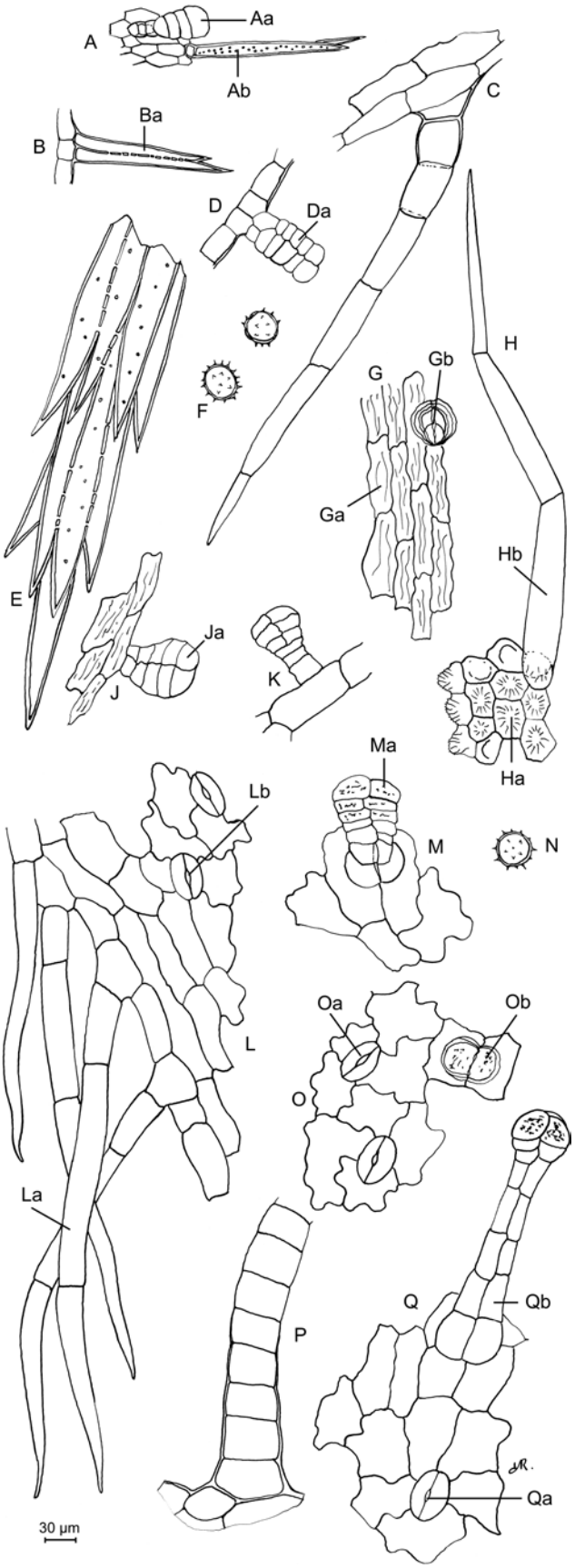

Figure 1391.-1. – *Illustration for identification test B of powdered herbal drug of arnica flower*

B. Microscopic examination (*2.8.23*). Separate the capitulum into its different parts. Examine under a microscope using *chloral hydrate solution R*. The powder shows the following diagnostic characters (Figure 1391.-1): the epidermises of the bracts of the involucre [L, M, O, Q] have stomata [Lb,

Herbal drugs

Oa, Qa] and trichomes, more abundant on the outer (abaxial) surface. There are several different types of trichomes: uniseriate multicellular covering trichomes, varying in length from 50-500 µm, particularly abundant on the margins of the bract, whole [La] or fragmented [P]; secretory trichomes with uni- or biseriate multicellular stalks and with multicellular, globular heads, about 300 µm long, abundant on the outer surface of the bract [Qb]; secretory trichomes with multicellular stalks and with multicellular, globular heads, about 80 µm long, abundant on the inner surface of the bract, in surface view [Ob] or in side view [Ma]. The epidermis of the ligulate corolla [C, G, H, J] consists of lobed or elongated cells covered by a striated cuticle [Ga], a few stomata and trichomes of different types: covering trichomes, with very sharp ends, whose length may exceed 500 µm, consisting of 1-3 proximal, thick-walled cells and 2-4 distal, thin-walled cells [C, Hb]; secretory trichomes with biseriate multicellular heads in surface view [Gb] or in side view [Ja]; secretory trichomes with multicellular stalks and multicellular globular heads [K]. The ligule ends in rounded papillose cells [Ha]. Fragments of the epidermis of the ovary [A, B, D] are covered with trichomes of 2 types: secretory trichomes with short stalks and multicellular globular heads, in surface view [Aa] or in side view [Da]; twinned covering trichomes usually consisting of 2 longitudinally united cells, with common pitted walls, in surface view [Ab] or in side view [Ba]; their ends are sharp and sometimes bifid. The epidermises of the calyx consist of elongated cells bearing short, unicellular, covering trichomes pointing towards the upper end of the bristle [E]. The pollen grains have a diameter of about 30 µm, are rounded, with a spiny exine, and have 3 germinal pores [F, N].

C. Examine the chromatograms obtained in the test for *Calendula officinalis* L. - *Heterotheca inuloides* Cass.

Results: the chromatogram obtained with the test solution shows, in the middle, a fluorescent blue zone corresponding to the zone due to chlorogenic acid in the chromatogram obtained with the reference solution; it shows, above this zone, 3 fluorescent yellowish-brown or orange-yellow zones, and above these 3 zones a fluorescent greenish-yellow zone due to astragalin; the zone located below the astragalin zone is due to isoquercitroside; the zone located just below this zone is due to luteolin-7-glucoside; it also shows a fluorescent greenish-blue zone below the zone due to caffeic acid in the chromatogram obtained with the reference solution.

TESTS

Foreign matter (*2.8.2*): maximum 5.0 per cent.

***Calendula officinalis* L. - *Heterotheca inuloides* Cass.** Thin-layer chromatography (*2.2.27*).

Test solution. To 2.00 g of the powdered herbal drug (710) (*2.9.12*) add 10 mL of *methanol R*. Heat in a water-bath at 60 °C for 5 min with shaking. Cool and filter.

Reference solution. Dissolve 2.0 mg of *caffeic acid R*, 2.0 mg of *chlorogenic acid R* and 5.0 mg of *rutin R* in *methanol R* and dilute to 30 mL with the same solvent.

Plate: *TLC silica gel plate R*.

Mobile phase: *anhydrous formic acid R*, *water R*, *methyl ethyl ketone R*, *ethyl acetate R* (10:10:30:50 *V/V/V/V*).

Application: 15 µL as bands.

Development: over a path of 15 cm.

Drying: in air for a few minutes.

Detection: spray with a 10 g/L solution of *diphenylboric acid aminoethyl ester R* in *methanol R*, and then with a 50 g/L solution of *macrogol 400 R* in *methanol R*; heat at 100-105 °C for 5 min, allow to dry in air and examine in ultraviolet light at 365 nm.

Results: the chromatogram obtained with the reference solution shows in the lower part an orange-yellow fluorescent zone due to rutin, in the middle part a fluorescent zone due to chlorogenic acid and in the upper part a light bluish fluorescent zone due to caffeic acid; the chromatogram obtained with the test solution does not show a fluorescent orange-yellow zone corresponding to the zone due to rutin in the chromatogram obtained with the reference solution, nor does it show a zone below this.

Loss on drying (*2.2.32*): maximum 10.0 per cent, determined on 1.000 g of the powdered herbal drug (355) (*2.9.12*) by drying in an oven at 105 °C for 2 h.

Total ash (*2.4.16*): maximum 10.0 per cent.

ASSAY

Liquid chromatography (*2.2.29*).

Internal standard solution. Dissolve immediately before use 0.010 g of *santonin CRS*, accurately weighed, in 10.0 mL of *methanol R*.

Test solution. Introduce 1.00 g of the powdered herbal drug (355) (*2.9.12*) into a 250 mL round-bottomed flask, add 50 mL of a mixture of equal volumes of *methanol R* and *water R* and heat under a reflux condenser in a water-bath at 50-60 °C for 30 min, shaking frequently. Allow to cool and filter through a paper filter. Add the paper filter, cut into pieces, to the residue in the round-bottomed flask, add 50 mL of a mixture of equal volumes of *methanol R* and *water R* and heat under a reflux condenser in a water-bath at 50-60 °C for 30 min, shaking frequently. Repeat this procedure twice. To the combined filtrates add 3.00 mL of the internal standard solution and evaporate to 18 mL under reduced pressure. Rinse the round-bottomed flask with *water R* and dilute, with the washings, to 20.0 mL. Transfer the solution to a chromatography column about 0.15 m long and about 30 mm in internal diameter containing 15 g of *kieselguhr for chromatography R*. Allow to stand for 20 min. Elute with 200 mL of a mixture of equal volumes of *ethyl acetate R* and *methylene chloride R*. Evaporate the eluate to dryness in a 250 mL round-bottomed flask. Dissolve the residue in 10.0 mL of *methanol R* and add 10.0 mL of *water R*. Add 7.0 g of *neutral aluminium oxide R*, shake for 120 s, centrifuge at 5000 *g* for 10 min and filter through a paper filter. Evaporate 10.0 mL of the filtrate to dryness. Dissolve the residue in 3.0 mL of a mixture of equal volumes of *methanol R* and *water R* and filter.

Column:

- *size*: *l* = 0.12 m, Ø = 4 mm;
- *stationary phase*: *octadecylsilyl silica gel for chromatography R* (4 µm).

Mobile phase:

- *mobile phase A*: *water R*;
- *mobile phase B*: *methanol R*;

Time (min)	Mobile phase A (per cent *V/V*)	Mobile phase B (per cent *V/V*)
0 - 3	62	38
3 - 20	62 → 55	38 → 45
20 - 30	55	45
30 - 55	55 → 45	45 → 55
55 - 57	45 → 0	55 → 100
57 - 70	0	100
70 - 90	62	38

Flow rate: 1.2 mL/min.

Detection: spectrophotometer at 225 nm.

Injection: 20 µL loop injector.

Calculate the percentage content of total sesquiterpene lactones, expressed as dihydrohelenalin tiglate, using the following expression:

$$\frac{S_{LS} \times C \times V \times 1.187 \times 100}{S_S \times m \times 1000}$$

S_{LS} = area of all peaks due to sesquiterpene lactones appearing after the santonin peak in the chromatogram obtained with the test solution;

S_S = area of the peak due to santonin in the chromatogram obtained with the test solution;

m = mass of the herbal drug to be examined, in grams;

C = concentration of santonin in the internal standard solution used for the test solution, in milligrams per millilitre;

V = volume of the internal standard solution used for the test solution, in millilitres;

1.187 = peak correlation factor between dihydrohelenalin tiglate and santonin.

01/2008:1809
corrected 6.3

ARNICA TINCTURE

Arnicae tinctura

DEFINITION

Tincture produced from *Arnica flower (1391)*.

Content: minimum 0.04 per cent of sesquiterpene lactones expressed as dihydrohelenalin tiglate ($C_{20}H_{26}O_5$; M_r 346.42).

PRODUCTION

The tincture is produced from the herbal drug by a suitable procedure using 10 parts of ethanol (60-70 per cent *V/V*) for 1 part of drug.

CHARACTERS

Appearance: yellowish-brown liquid.

IDENTIFICATION

Examine the chromatograms obtained in the test for *Calendula officinalis - Heterotheca inuloides*.

Chromatogram obtained with the test solution:

- in the middle, a fluorescent blue zone corresponding to the zone due to chlorogenic acid in the chromatogram obtained with the reference solution;
- above this zone, 3 fluorescent yellowish-brown to orange-yellow zones, and above these 3 zones a fluorescent greenish-yellow zone corresponding to astragalin; the zone located below the astragalin zone corresponds to isoquercitrin; the zone located just below this zone corresponds to luteolin-7-glucoside;
- a fluorescent greenish-blue zone below the zone due to caffeic acid in the chromatogram obtained with the reference solution.

TESTS

Calendula officinalis - Heterotheca inuloides. Thin-layer chromatography (*2.2.27*).

Test solution. The tincture to be examined.

Reference solution. Dissolve 2.0 mg of *caffeic acid R*, 2.0 mg of *chlorogenic acid R* and 5.0 mg of *rutin R* in *methanol R* and dilute to 30.0 mL with the same solvent.

Plate: *TLC silica gel plate R* (5-40 µm) [or *TLC silica gel plate R* (2-10 µm)].

Mobile phase: *anhydrous formic acid R*, *water R*, *methyl ethyl ketone R*, *ethyl acetate R* (10:10:30:50 *V/V/V/V*).

Application: 30 µL [or 8 µL] as bands.

Development: over a path of 15 cm [or 8 cm].

Drying: at 80-105 °C.

Detection: spray the plate whilst still hot with a 10 g/L solution of *diphenylboric acid aminoethyl ester R* in *methanol R* and then with a 50 g/L solution of *macrogol 400 R* in *methanol R*; heat 5 min at 100-105 °C, allow the plate to dry in air and examine in ultraviolet light at 365 nm.

Results: the chromatogram obtained with the reference solution shows in the lower part an orange-yellow fluorescent zone (rutin), in the middle part a fluorescent zone due to chlorogenic acid and in the upper part a light bluish fluorescent zone (caffeic acid). The chromatogram obtained with the test solution does not show any fluorescent orange-yellow zone corresponding to rutin in the chromatogram obtained with the reference solution and no zone below the zone corresponding to rutin.

Ethanol (*2.9.10*): the final ethanol concentration is not less than 90 per cent of that of the initial extraction solvent.

Methanol and 2-propanol (*2.9.11*): maximum 0.05 per cent *V/V* of methanol and maximum 0.05 per cent *V/V* of 2-propanol.

Dry residue (*2.8.16*): minimum 1.7 per cent.

ASSAY

Liquid chromatography (*2.2.29*).

Internal standard solution. Dissolve immediately before use 0.010 g accurately weighed of *santonin CRS* and 0.02 g of *butyl 4-hydroxybenzoate R* in 10.0 mL of *methanol R*.

Test solution. In a round-bottomed flask introduce 5.00 g of the tincture to be examined, add 2.00 mL of the internal standard solution and 3 g of *anhydrous aluminium oxide R*, shake for 120 s and filter through a filter paper. Rinse the round-bottomed flask and filter with 5 mL of a mixture of equal volumes of *methanol R* and *water R* and filter. Evaporate the filtrate to dryness. Dissolve the residue in 2.0 mL of a mixture of 20 volumes of *water R* and 80 volumes of *methanol R* and filter through a membrane filter (nominal pore size 0.45 µm).

Reference solution. Dissolve 0.02 g of *methyl 4-hydroxybenzoate R* and 0.02 g of *ethyl 4-hydroxybenzoate R* in *methanol R* and dilute to 10.0 mL with the same solvent.

Column:

- *size*: *l* = 0.12 m, Ø = 4 mm;
- *stationary phase*: *end-capped octadecylsilyl silica gel for chromatography R* (5 µm);
- *temperature*: 20 °C.

Mobile phase:

- *mobile phase A*: *water R*;
- *mobile phase B*: *methanol R*;

Time (min)	Mobile phase A (per cent *V/V*)	Mobile phase B (per cent *V/V*)
0 - 3	62	38
3 - 20	62 → 55	38 → 45
20 - 30	55	45
30 - 55	55 → 45	45 → 55

Flow rate: 1.2 mL/min.

Detector: spectrophotometer at 225 nm.

Injection: 20 µL.

Relative retention with reference to santonin (retention time = about 9.5 min): butyl 4-hydroxybenzoate = about 4.6.

System suitability: reference solution:

- *resolution*: minimum 5 between the peaks due to methyl 4-hydroxybenzoate and ethyl 4-hydroxybenzoate.

Herbal drugs

Calculate the percentage of lactone sesquiterpenes, expressed as dihydrohelenalin tiglate, using the following expression:

$$\frac{F_1 \times C \times V \times 1.187}{F_2 \times m \times 10}$$

F_1 = area of all peaks appearing between the peaks due to santonin and butyl 4-hydroxybenzoate in the chromatogram obtained with the test solution;

F_2 = area of the peak due to santonin in the chromatogram obtained with the test solution;

m = mass of the tincture to be examined, in grams;

C = concentration of santonin in the internal standard solution used to prepare the test solution, in milligrams per millilitre;

V = volume of the internal standard solution used to prepare the test solution, in millilitres;

1.187 = peak correlation factor between dihydrohelenalin tiglate and santonin.

01/2013:1866

ARTICHOKE LEAF

Cynarae folium

DEFINITION

Whole or cut, dried leaf of *Cynara cardunculus* L. (syn. *C. scolymus* L.).

Content: minimum 0.8 per cent of chlorogenic acid ($C_{16}H_{18}O_9$; M_r 354.3) (dried drug).

IDENTIFICATION

A. The entire leaf may be up to 70 cm long and 30 cm wide. The lamina is deeply lobed in the upper part to within 1-2 cm of the petiole on either side, in the lower part the leaf becomes pinnate; all the segments have markedly dentate margins and taper at the apex. Spines are absent. The upper surface of the lamina is green with a fine covering of whitish hairs, the lower surface is pale green or white and densely tomentose with long, tangled hairs. The petiole and main veins are flat on the upper surface, prominently raised and longitudinally ridged on the lower surface, with conspicuous hairs on both surfaces.

B. Reduce to a powder (1000) (*2.9.12*). The powder is greenish-grey. Examine under a microscope using *chloral hydrate solution R*. The powder shows the following diagnostic characters (Figure 1866.-1): fragments of the epidermises of the lamina, in surface view; the upper epidermis [F] is composed of cells with straight or slightly sinuous walls [Fa], accompanied by palisade parenchyma [Fb]; the lower epidermis [C] is composed of more sinuous-walled cells; abundant anomocytic stomata (*2.8.3*) on both surfaces [D] and multicellular, uniseriate covering trichomes in felted masses, the majority fragmented [Ca] with a short stalk composed of several cells and a very long, narrow and frequently curled terminal cell, others consisting of 4-6 cylindrical cells; very occasional glandular trichomes with a short stalk and a uniseriate or biseriate head, in surface view [E] or in transverse section [Ba]; abundant fragments of covering trichomes [G]; fragments of the lamina, in transverse section [B]; abundant fragments of vascular tissue from the petiole and veins [A].

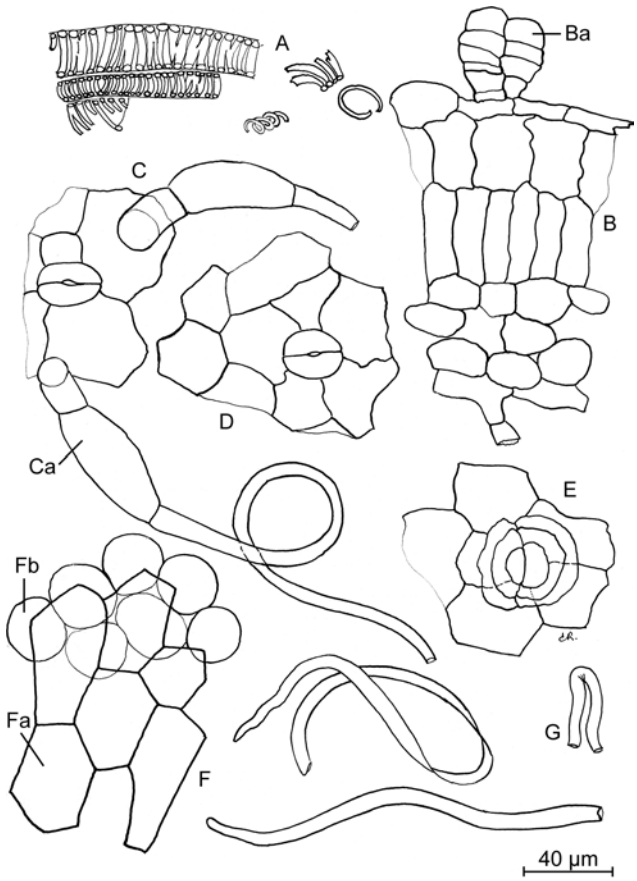

Figure 1866.-1. – *Illustration for identification test B of powdered herbal drug of artichoke leaf*

C. Thin-layer chromatography (*2.2.27*).

Test solution. To 2.0 g of the powdered herbal drug (1000) (*2.9.12*) add 20 mL of *ethanol (60 per cent V/V) R*. Allow to stand for 2 h with occasional stirring. Filter.

Reference solution. Dissolve 5 mg of *luteolin-7-glucoside R* and 5 mg of *chlorogenic acid CRS* in *methanol R* and dilute to 10 mL with the same solvent.

Plate: *TLC silica gel plate R* (5-40 µm) [or *TLC silica gel plate R* (2-10 µm)].

Mobile phase: *anhydrous formic acid R*, *glacial acetic acid R*, *water R*, *ethyl acetate R* (11:11:27:100 *V/V/V/V*).

Application: 10 µL [or 2 µL] as bands of 10 mm [or 8 mm].

Development: over a path of 13 cm [or 6 cm].

Drying: in air.

Detection: heat at 100 °C for 5 min; spray the warm plate with a 10 g/L solution of *diphenylboric acid aminoethyl ester R* in *methanol R* followed by a 50 g/L solution of *macrogol 400 R* in *methanol R*; examine in ultraviolet light at 365 nm.

Results: see below the sequence of fluorescent zones present in the chromatograms obtained with the reference solution and the test solution. Furthermore, other fluorescent zones may be present in the chromatogram obtained with the test solution.

Top of the plate	
	A light blue fluorescent zone
———	———
Luteolin-7-glucoside: a yellow or orange fluorescent zone	A yellow or orange fluorescent zone (luteolin-7-glucoside)
Chlorogenic acid: a light blue fluorescent zone	A light blue fluorescent zone (chlorogenic acid)
———	———
Reference solution	**Test solution**

TESTS

Total ash (*2.4.16*): maximum 20.0 per cent.

Loss on drying (*2.2.32*): maximum 12.0 per cent, determined on 1.000 g of the powdered herbal drug (710) (*2.9.12*) by drying in an oven at 105 °C for 2 h.

ASSAY

Liquid chromatography (*2.2.29*).

Test solution. To 0.500 g of the powdered herbal drug (1000) (*2.9.12*) add 50.0 mL of *methanol R* and heat under a reflux condenser on a water-bath at 70 °C for 1 h. Centrifuge and transfer the supernatant to a 200 mL volumetric flask. Repeat the procedure and dilute to 200.0 mL with *water R*.

Reference solution. Dissolve 5.0 mg of *chlorogenic acid CRS* in 50.0 mL of *methanol R*. Transfer 5.0 mL of this solution to a volumetric flask, add 5 mL of *methanol R* and dilute to 20.0 mL with *water R*.

Column:

- *size*: *l* = 0.25 m, Ø = 4.6 mm;
- *stationary phase*: *octadecylsilyl silica gel for chromatography R* (5 µm);
- *temperature*: 40 °C.

Mobile phase:

- *mobile phase A*: *phosphoric acid R*, *water R* (0.5:99.5 *V/V*);
- *mobile phase B*: *phosphoric acid R*, *acetonitrile R* (0.5:99.5 *V/V*);

Time (min)	Mobile phase A (per cent *V/V*)	Mobile phase B (per cent *V/V*)
0 - 1	92	8
1 - 20	92 → 75	8 → 25
20 - 33	75	25
33 - 35	75 → 0	25 → 100

Flow rate: 1.2 mL/min.

Detection: spectrophotometer at 330 nm.

Injection: 25 µL.

System suitability: test solution:

- the chromatogram obtained is similar to the chromatogram shown in Figure 1866.-2;
- *resolution*: minimum 2.0 between the peak due to chlorogenic acid and the subsequent peak (peak 2).

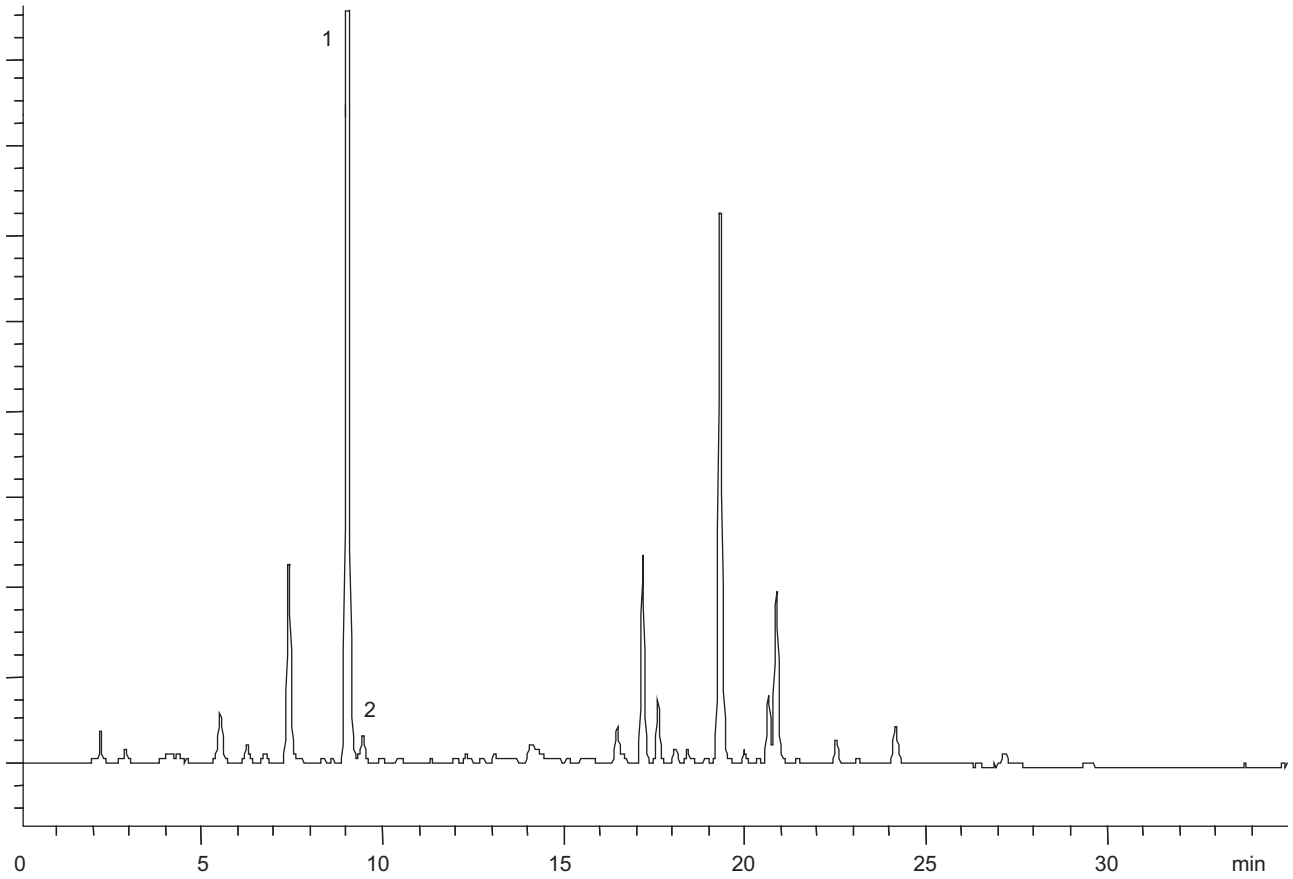

1. chlorogenic acid 2. unknown substance

Figure 1866.-2. – *Chromatogram for the assay of artichoke leaf: test solution*

Herbal drugs

Calculate the percentage content of chlorogenic acid using the following expression:

$$\frac{A_1 \times m_2 \times p}{A_2 \times m_1}$$

A_1 = area of the peak due to chlorogenic acid in the chromatogram obtained with the test solution;

A_2 = area of the peak due to chlorogenic acid in the chromatogram obtained with the reference solution;

m_1 = mass of the herbal drug to be examined in the test solution, in grams;

m_2 = mass of *chlorogenic acid CRS* in the reference solution, in grams;

p = percentage content of chlorogenic acid in *chlorogenic acid CRS*.

01/2010:2389

ARTICHOKE LEAF DRY EXTRACT

Cynarae folii extractum siccum

DEFINITION

Dry extract produced from *Artichoke leaf (1866)*.

Content: minimum 0.6 per cent of chlorogenic acid ($C_{16}H_{18}O_9$; M_r 354.3) (dried extract).

PRODUCTION

The extract is produced from the herbal drug by a suitable procedure using water of minimum 80 °C.

CHARACTERS

Appearance: light brown or brown, amorphous powder.

IDENTIFICATION

Thin-layer chromatography (*2.2.27*).

Test solution. Dissolve 1.0 g of the extract to be examined in 10 mL of *ethanol (60 per cent V/V) R*. Sonicate for 5 min and filter.

Reference solution. Dissolve 5 mg of *luteolin-7-glucoside R* and 5 mg of *chlorogenic acid R* in 10 mL of *methanol R*.

Plate: *TLC silica gel plate R* (5-40 µm) [or *TLC silica gel plate R* (2-10 µm)].

Mobile phase: *anhydrous formic acid R*, *glacial acetic acid R*, *water R*, *ethyl acetate R* (11:11:27:100 *V/V/V/V*).

Application: 10 µL [or 2 µL] as bands of 10 mm [or 8 mm].

Development: over a path of 13 cm [or 6 cm].

Drying: in air.

Detection: heat at 100 °C for 5 min; spray the warm plate with a 10 g/L solution of *diphenylboric acid aminoethyl ester R* in *methanol R* followed by a 50 g/L solution of *macrogol 400 R* in *methanol R*; examine in ultraviolet light at 365 nm.

Results: see below the sequence of fluorescent zones present in the chromatograms obtained with the reference solution and the test solution. Furthermore, other fluorescent zones may be present in the chromatogram obtained with the test solution.

Top of the plate	
	A light blue fluorescent zone
Luteolin-7-glucoside: a yellow or orange fluorescent zone	A yellow or orange fluorescent zone (luteolin-7-glucoside)
Chlorogenic acid: a light blue fluorescent zone	A light blue fluorescent zone (chlorogenic acid)
Reference solution	**Test solution**

TESTS

Loss on drying (*2.8.17*): maximum 6.0 per cent.

Total ash (*2.4.16*): maximum 30.0 per cent.

ASSAY

Liquid chromatography (*2.2.29*).

Solvent mixture: *methanol R*, *water R* (30:70 *V/V*).

Test solution. Dissolve 30.0 mg of the extract to be examined in the solvent mixture and dilute to 25.0 mL with the solvent mixture.

Reference solution (a). Dissolve 5.0 mg of *chlorogenic acid CRS* in 50.0 mL of *methanol R*. Transfer 5.0 mL of this solution to a volumetric flask, add 5 mL of *methanol R* and dilute to 20.0 mL with *water R*.

Reference solution (b). Dissolve 30 mg of the *artichoke leaf dry extract HRS* in the solvent mixture and dilute to 25.0 mL with the solvent mixture.

Column:

- *size*: *l* = 0.25 m, Ø = 4.6 mm;
- *stationary phase*: *octadecylsilyl silica gel for chromatography R* (5 µm);
- *temperature*: 40 °C.

Mobile phase:

- *mobile phase A*: *phosphoric acid R*, *water R* (0.5:99.5 *V/V*);
- *mobile phase B*: *phosphoric acid R*, *acetonitrile R* (0.5:99.5 *V/V*);

Time (min)	Mobile phase A (per cent *V/V*)	Mobile phase B (per cent *V/V*)
0 - 1	92	8
1 - 20	92 → 75	8 → 25
20 - 33	75	25
33 - 35	75 → 0	25 → 100

Flow rate: 1.2 mL/min.

Detection: spectrophotometer at 330 nm.

Injection: 25 µL.

System suitability: reference solution (b):

- *peak-to-valley ratio*: minimum 2.5, where H_p = height above the baseline of the peak immediately after the peak due to chlorogenic acid and H_v = height above the baseline of the lowest point of the curve separating this peak from the peak due to chlorogenic acid;
- the chromatogram obtained is similar to the chromatogram supplied with the *artichoke leaf dry extract HRS*.

Herbal drugs

Calculate the percentage content of chlorogenic acid using the following expression:

$$\frac{A_1 \times m_2 \times p \times 0.125}{A_2 \times m_1}$$

A_1 = area of the peak due to chlorogenic acid in the chromatogram obtained with the test solution;

A_2 = area of the peak due to chlorogenic acid in the chromatogram obtained with reference solution (a);

m_1 = mass of the extract to be examined used to prepare the test solution, in milligrams;

m_2 = mass of *chlorogenic acid CRS* used to prepare reference solution (a), in milligrams;

p = percentage content of chlorogenic acid in *chlorogenic acid CRS*.

07/2012:1600

ASH LEAF

Fraxini folium

DEFINITION

Dried leaf of *Fraxinus excelsior* L. or *Fraxinus angustifolia* Vahl (syn. *Fraxinus oxyphylla* M. Bieb) or of hybrids of these 2 species or of a mixture.

Content: minimum 2.5 per cent of total hydroxycinnamic acid derivatives, expressed as chlorogenic acid ($C_{16}H_{18}O_9$; M_r 354.3) (dried drug).

IDENTIFICATION

A. The leaf consists of leaflets that are sometimes detached and separated from the rachis. The leaflet is about 6 cm long and 3 cm wide. Each leaflet is subsessile or shortly petiolate, oblong, lanceolate, somewhat unequal at the base, acuminate at the apex, with fine, acute teeth on the margins; the upper surface is dark green and the lower surface is greyish-green. The midrib and secondary veins are whitish and prominent on the lower surface.

B. Microscopic examination (*2.8.23*). The powder is greyish-green. Examine under a microscope using *chloral hydrate solution R*. The powder shows the following diagnostic characters (Figure 1600.-1): fragments of the upper epidermis of the lamina in surface view [B], with some of the cells showing cuticular striations, accompanied by underlying palisade parenchyma [Ba]; fragments of the lower epidermis in surface view [A] consisting of cells covered by fine cuticular striations [Aa], numerous anomocytic stomata (*2.8.3*) [Ab] and rare peltate glandular trichomes with a unicellular stalk and a glandular head composed of radiating cells [Ac]; fragments of lamina in transverse section [F] with 2 layers of palisade parenchyma [Fa], spongy parenchyma [Fb] and, occasionally, glandular trichomes embedded in the epidermis [Fc]; occasional multicellular, uniseriate, conical covering trichomes composed of cells with thick striated walls, either on an epidermis [C] or fragmented [D]; fragments of vascular tissue from the leaflets [E] composed of spiral vessels [Ea], short fibres [Eb] and sometimes palisade parenchyma [Ec]; fragments of vascular tissue from the veins [G] composed of fibres [Ga], sometimes accompanied by cells with thick, pitted walls from the medullary rays [Gb].

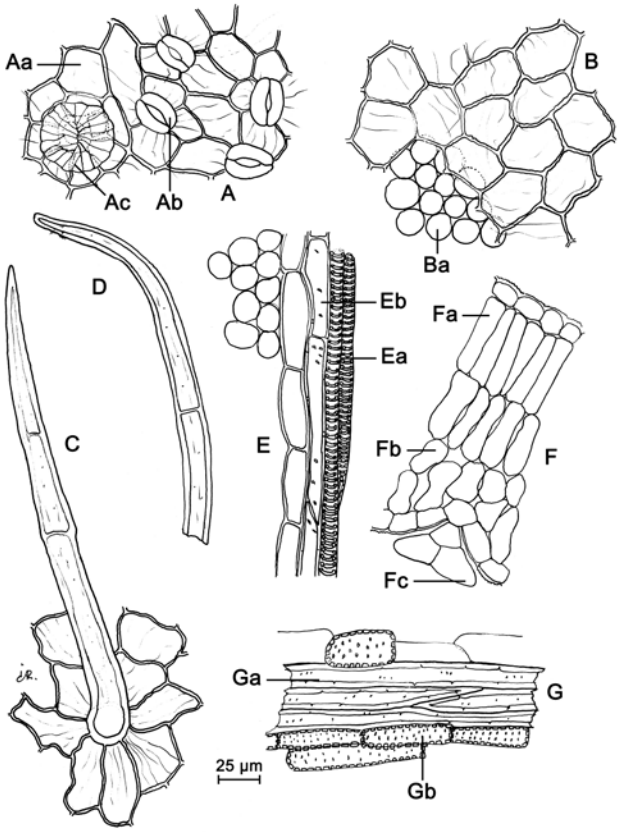

Figure 1600.-1. – *Illustration for identification test B of powdered herbal drug of ash leaf*

C. Examine the chromatograms obtained in the test for *Fraxinus ornus*.

Results: see below the sequence of zones present in the chromatograms obtained with the reference solution and the test solution. The intensity of the zones present in the chromatogram obtained with the test solution may vary depending on the presence of *F. excelsior*, *F. angustifolia*, their hybrids or their concentration in a mixture. Furthermore, other fluorescent zones may be present in the chromatogram obtained with the test solution.

Top of the plate	
———	———
	A light blue fluorescent zone (acteoside)
Chlorogenic acid: a light blue fluorescent zone	A light blue fluorescent zone may be present (chlorogenic acid)
———	———
	A light blue fluorescent zone
Rutin: an orange fluorescent zone	An orange fluorescent zone (rutin)
Reference solution	**Test solution**

TESTS

Foreign matter (*2.8.2*): maximum 3.0 per cent of stems and maximum 2.0 per cent of other foreign matter.

Fraxinus ornus. Thin-layer chromatography (*2.2.27*).

Test solution. To 1 g of the powdered herbal drug (355) (*2.9.12*) add 20 mL of *methanol R*. Stir with a magnetic stirrer for 10 min. Filter.

Reference solution. Dissolve 5 mg of *rutin R* and 5 mg of *chlorogenic acid R* in 10 mL of *methanol R*.

Plate: *TLC silica gel plate R* (5-40 µm) [or *TLC silica gel plate R* (2-10 µm)].

Herbal drugs

Mobile phase: *anhydrous formic acid R*, *water R*, *ethyl acetate R* (10:10:80 *V/V/V*).

Application: 10 µL [or 4 µL] as bands of 10 mm [or 8 mm].

Development: over a path of 10 cm [or 6 cm].

Drying: in air.

Detection: heat at 100 °C for 3 min; treat the still-warm plate with a 10 g/L solution of *diphenylboric acid aminoethyl ester R* in *methanol R*; dry in air; treat with a 50 g/L solution of *macrogol 400 R* in *methanol R*; dry in air; examine in ultraviolet light at 365 nm.

Results: the chromatogram obtained with the test solution does not show any intense light blue fluorescent zones in the upper third of the chromatogram.

Loss on drying (*2.2.32*): maximum 10.0 per cent, determined on 1.000 g of the powdered herbal drug (355) (*2.9.12*) by drying in an oven at 105 °C for 2 h.

Total ash (*2.4.16*): maximum 12.0 per cent.

ASSAY

Test solution (a). To 0.300 g of the powdered herbal drug (355) (*2.9.12*) add 95 mL of *ethanol (50 per cent V/V) R*. Boil in a water-bath under a reflux condenser for 30 min. Allow to cool and filter. Rinse the filter with 5 mL of *ethanol (50 per cent V/V) R*. Combine the filtrate and the rinsings in a volumetric flask and dilute to 100.0 mL with *ethanol (50 per cent V/V) R*.

Test solution (b). To 1.0 mL of test solution (a) in a test tube, add 2 mL of *0.5 M hydrochloric acid*, 2 mL of a solution prepared by dissolving 10 g of *sodium nitrite R* and 10 g of *sodium molybdate R* in 100 mL of *water R*, then add 2 mL of *dilute sodium hydroxide solution R* and dilute to 10.0 mL with *water R*; mix.

Immediately measure the absorbance (*2.2.25*) of test solution (b) at 525 nm, using as compensation liquid a solution prepared as follows: mix 1.0 mL of test solution (a), 2 mL of *0.5 M hydrochloric acid*, 2 mL of *dilute sodium hydroxide solution R* and dilute to 10.0 mL with *water R*.

Calculate the percentage content of total hydroxycinnamic acid derivatives, expressed as chlorogenic acid, using the following expression:

$$\frac{A \times 5.3}{m}$$

taking the specific absorbance of chlorogenic acid to be 188.

A = absorbance at 525 nm;

m = mass of the herbal drug to be examined, in grams.

01/2011:2435

ASTRAGALUS MONGHOLICUS ROOT

Astragali mongholici radix

DEFINITION

Whole, dried root of *Astragalus mongholicus* var. *mongholicus* (syn. *Astragalus membranaceus* Bunge var. *mongholicus* (Bunge) P.K. Hsiao) and *Astragalus mongholicus* var. *dahuricus* (DC.) Podlech (syn. *Astragalus membranaceus* Bunge), freed from rootlets and rootstock, collected from spring to autumn.

Content: minimum 0.040 per cent of astragaloside IV ($C_{41}H_{68}O_{14}$; M_r 785) (dried drug).

IDENTIFICATION

A. Cylindrical, often with branches, upper part relatively thick, 30-90 cm long and 1-3.5 cm in diameter. Externally pale brownish-yellow or pale brown, with irregular, longitudinal wrinkles or furrows. Texture hard and tenacious; uneasily broken, fracture highly fibrous and weakly (cultivated origin) or strongly starchy (wild origin), bark yellowish-white, wood pale yellow, with radiate striations and fissures; the central region is dark brown and in older roots may be broken down to form a hollow surrounded by fragments of disintegrating tissue.

B. Reduce to a powder (355) (*2.9.12*). The powder is yellowish-white. Examine under a microscope using *chloral hydrate solution R*. The powder shows the following diagnostic characters: fibres, in bundles or scattered, 8-30 µm in diameter, thick-walled with longitudinal fissures on the surface, the primary walls often separated from the secondary walls, both ends often broken or tassel-like, or slightly truncated; colourless or orange vessels with closely arranged bordered pits; cork fragments consisting of several layers, often accompanied by collenchymatous phelloderm; stone cells occasionally visible, rounded, oblong or irregular, slightly thick-walled. Examine under a microscope using a 50 per cent *V/V* solution of *glycerol R*: the powder shows small, rounded or ovoid starch granules, usually simple or sometimes 2- or 3-compound, about 5 µm in diameter.

C. Thin-layer chromatography (*2.2.27*).

Test solution. Heat 3 g of the powdered herbal drug (355) (*2.9.12*) with 50 mL of *methanol R* for 50 min under reflux and then filter. Evaporate the filtrate under reduced pressure to dryness and take up the residue in 1 mL of *water R*. Apply the solution to a 6 mL solid phase extraction column containing *octadecylsilyl silica gel for chromatography R* previously conditioned with 3 mL of *methanol R* and then with 3 mL of *water R*. Wash the column with 15 mL of *water R* followed by 15 mL of a 30 per cent *V/V* solution of *methanol R*. Discard the washings. Elute with 20 mL of *methanol R* and collect the eluate. Evaporate the eluate under reduced pressure to dryness and take up the residue with 2 mL of *methanol R*.

Reference solution. Dissolve 10.0 mg of *daidzin R* and 5.0 mg of *daidzein R* in 5.0 mL of *methanol R*.

Plate: *TLC silica gel F_{254} plate R* (2-10 µm).

Mobile phase: *water R*, *methanol R*, *ethyl acetate R* (10:13.5:100 *V/V/V*).

Application: 3 µL as bands of 8 mm.

Development: over a path of 7 cm.

Drying: in air.

Detection A: examine in ultraviolet light at 254 nm.

Results A: see below the sequence of zones present in the chromatograms obtained with the reference solution and the test solution. Furthermore, other faint zones may be present in the chromatogram obtained with the test solution.

Top of the plate	
	A blue fluorescent zone
Daidzein: a quenching zone	
	A quenching zone
_____	_____
	A quenching zone
Daidzin: a quenching zone	A quenching zone
_____	_____
Reference solution	**Test solution**

Detection B: treat with *anisaldehyde solution R*. Heat at 100 °C for 3 min. Examine in ultraviolet light at 366 nm.

Results B: see below the sequence of zones present in the chromatograms obtained with the reference solution and the test solution. Furthermore, other faint zones may be present in the chromatogram obtained with the test solution.

Herbal drugs

Top of the plate	
Daidzein: a pale blue zone	A violet zone A violet zone
Daidzin: a pale blue zone	A violet zone A brown zone 5 brown zones
Reference solution	**Test solution**

TESTS

Foreign matter (*2.8.2*): maximum 5 per cent.

Loss on drying (*2.2.32*): maximum 10.0 per cent, determined on 1.000 g of the powdered herbal drug (355) (*2.9.12*) by drying in an oven at 105 °C for 3 h.

Total ash (*2.4.16*): maximum 5.0 per cent.

Ash insoluble in hydrochloric acid (*2.8.1*): maximum 1.0 per cent.

ASSAY

Liquid chromatography (*2.2.29*).

Test solution. Weigh 4.0 g of the powdered herbal drug (355) (*2.9.12*) into a Soxhlet type extractor and add 40 mL of *methanol R*. Macerate overnight. Add again 40 mL of *methanol R*. Heat under a reflux condenser for 4 h. Evaporate to dryness. Dissolve the residue in 10 mL of *water R*, heating slightly if necessary. Shake with 4 quantities, each of 40 mL, of *butanol R* saturated with *water R*. Combine the butanol extracts and wash with 2 quantities, each of 40 mL, of *ammonia R*. Discard the ammonia layers and evaporate the butanol layers to dryness. Dissolve the residue in 5 mL of *water R* and cool. Apply the solution to a solid phase extraction column containing 1 g of *octadecylsilyl silica gel for chromatography R* previously washed with 5 mL of *methanol R* and 5 mL of *water R*. Wash the column with 20 mL of *water R* and 20 mL of *ethanol (25 per cent V/V) R*. Elute with 25 mL of *ethanol (70 per cent V/V) R*. Evaporate the eluate to dryness. Dissolve the residue in 5.0 mL of *methanol R*.

Reference solution (a). Dissolve 10.0 mg of *astragaloside IV CRS* in *methanol R* and dilute to 10.0 mL with the same solvent.

Reference solutions (b), (c), (d). Dilute reference solution (a) to obtain 3 reference solutions of astragaloside IV, the concentrations of which span the expected value in the test solution.

Reference solution (e). Dissolve 5.0 mg of *ginsenoside Rb1 R* in 5 mL of *methanol R* and dilute to 10.0 mL with reference solution (a).

Column:

- *size*: *l* = 0.25 m, Ø = 3.2 mm;
- *stationary phase*: *octadecylsilyl silica gel for chromatography R* (3 µm);
- *temperature*: 25 °C.

Mobile phase:

- *mobile phase A*: *water R*;
- *mobile phase B*: *acetonitrile R*;

Time (min)	Mobile phase A (per cent *V/V*)	Mobile phase B (per cent *V/V*)
0 - 5	90	10
5 - 10	90 → 80	10 → 20
10 - 20	80 → 75	20 → 25
20 - 30	75 → 67	25 → 33
30 - 40	67 → 65	33 → 35
40 - 50	65 → 40	35 → 60
50 - 55	40	60

Flow rate: 0.5 mL/min.

Detection: evaporative light-scattering detector; the following settings have been found to be suitable; if the detector has different setting parameters, adjust the detector settings so as to comply with the system suitability criterion:

- *carrier gas*: air;
- *flow rate*: 1.5 mL/min;
- *evaporator temperature*: 50 °C.

Injection: 20 µL of the test solution and reference solutions (b), (c), (d) and (e).

Relative retention with reference to ginsenoside Rb1 (retention time = about 33.6 min): astragaloside IV = about 1.05.

System suitability:

- *resolution*: minimum 4.0 between the peaks due to astragaloside IV and ginsenoside Rb1 in the chromatogram obtained with reference solution (e).

Establish a calibration curve with the logarithm of the concentration (mg/mL) of reference solutions (b), (c) and (d) (corrected by the declared percentage content of *astragaloside IV CRS*) as the abscissa and the logarithm of the corresponding peak area as the ordinate. Calculate the percentage content of astragaloside IV using the following expression:

$$\frac{10^A \times 0.5}{m}$$

A = logarithm of the concentration corresponding to the astragaloside IV peak in the chromatogram obtained with the test solution, determined from the calibration curve;

m = mass of the herbal drug to be examined used to prepare the test solution, in grams.

07/2012:2559

ATRACTYLODES LANCEA RHIZOME

Atractylodis lanceae rhizoma

DEFINITION

Dried, whole or fragmented rhizome of *Atractylodes lancea* (Thunb.) DC. (syn. *Atractylodes chinensis* (Bunge) Koidz.) with the roots removed, collected in spring and autumn.

Content: minimum 14 mL/kg of essential oil (anhydrous drug).

IDENTIFICATION

A. The whole rhizome is curved, irregular, nodular and cylindrical, 3-10 cm long and 1-3 cm in diameter. The external surface is transversally wrinkled, dark greyish-brown or yellowish-brown; it shows numerous rounded protuberances and large circular stem scars and smaller root scars.

Herbal drugs

The fragmented rhizome occurs in slices with a highly variable diameter (1-4 cm) and a thickness of about 0.5 cm. The external surface is wrinkled, dark greyish-brown or yellowish-brown and shows numerous scars. The transverse section is pale yellow or brownish-yellow, consisting of fibrous tissues scattered with particularly abundant orange oil cavities appearing as dots.

B. Microscopic examination (*2.8.23*). The powder is brownish-yellow. Examine under a microscope using *chloral hydrate solution R*. The powder shows the following diagnostic characters: fragments of orange cork, with polyhedral cells, often accompanied by subrectangular or ovoid sclereids with very thick channelled walls from the phelloderm; isolated, ovoid or subrectangular sclereids with very thick, channelled walls and a narrow lumen, variable in shape (20-80 µm in diameter); fragments of parenchyma with polyhedral or subrectangular cells containing small needle-shaped crystals of calcium oxalate (5-30 µm) clearly visible in polarised light; fragments of fibres in bundles, with heavily thickened and slightly pitted walls (40 µm in diameter) and a narrow lumen, very often associated with xylem vessels; fragments of short, reticulate or pitted vessels, usually included in parenchyma with thin-walled cells; fragments of oil glands with thin-walled cells and granular orange-brown contents and orange oil droplets. Examine under a microscope, without heating, using *glycerol R*: the powder shows pieces of inulin, free or included in parenchyma cells.

C. Examine the chromatograms obtained in the test for *Atractylodes macrocephala*.

Results: see below the sequence of zones present in the chromatograms obtained with the reference solution and the test solution. Furthermore, other faint zones may be present in the chromatogram obtained with the test solution.

Top of the plate	
β-Caryophyllene: a pink zone	A pink or violet zone
	An orange zone may be present
———	———
	An intense greyish-green zone
	A very faint violet zone
———	———
Bornyl acetate: a brown zone	A violet zone
	Several violet zones
Reference solution	**Test solution**

TESTS

Atractylodes macrocephala. Thin-layer chromatography (*2.2.27*).

Test solution. Introduce 0.5 g of the powdered herbal drug (355) (*2.9.12*) into a centrifuge tube, add 2 mL of *methanol R* and stopper the tube. Sonicate at 25 °C for 15 min and centrifuge.

Reference solution. Dissolve 10 mg of *β-caryophyllene R* and 10 mg of *bornyl acetate R* in 5 mL of *methanol R*.

Plate: *TLC silica gel plate R* (5-40 µm) [or *TLC silica gel plate R* (2-10 µm)].

Mobile phase: *ethyl acetate R*, *heptane R* (5:95 *V/V*).

Application: 5 µL [or 3 µL] as bands of 10 mm [or 6 mm].

Development: in an unsaturated tank, over a path of 10 cm [or 6 cm].

Drying: in air.

Detection: treat with *anisaldehyde solution R* and heat at 105-110 °C for 5-10 min; examine in daylight.

Results: the chromatogram obtained with the test solution shows an intense greyish-green zone in the middle third. In the case of a substitution by *Atractylodes macrocephala*, no intense greyish-green zone is present in the middle third.

Water (*2.2.13*): maximum 100 mL/kg, determined on 20.0 g of the powdered herbal drug (355) (*2.9.12*).

Total ash (*2.4.16*): maximum 7.0 per cent.

Ash insoluble in hydrochloric acid (*2.8.1*): maximum 1.0 per cent.

ASSAY

Essential oil (*2.8.12*). Use 15.0 g of freshly powdered herbal drug (710) (*2.9.12*), a 500 mL round-bottomed flask, 200 mL of *water R* as the distillation liquid and 0.50 mL of *xylene R* in the graduated tube. Distil at a rate of 2-3 mL/min for 2 h.

07/2012:2560

ATRACTYLODES RHIZOME, LARGEHEAD

Atractylodis macrocephalae rhizoma

DEFINITION

Dried, whole or fragmented rhizome of *Atractylodes macrocephala* Koidz. with the roots removed, collected in winter when the lower leaves of the plant turn yellow and the upper leaves become fragile.

Content: minimum 9 mL/kg of essential oil (anhydrous drug).

IDENTIFICATION

A. The whole rhizome is irregularly shaped, 3-13 cm long and 1.5-7 cm in diameter. Externally yellowish-grey or dark brown, with small knob-like protrusions, interrupted longitudinal wrinkles and grooves.

The fragmented rhizome occurs in slices with a highly variable diameter (1-7 cm) and a thickness of about 0.5 cm. The external surface is wrinkled or grooved, more or less dark yellowish-brown with numerous root scars. The transverse section is pale yellow, consisting of tissues with wide spaces between them and scattered with many orange oil cavities appearing as dots that are particularly abundant in the external tissues.

The fracture is hard and fibrous.

B. Microscopic examination (*2.8.23*). The powder is brownish-yellow. Examine under a microscope using *chloral hydrate solution R*. The powder shows the following diagnostic characters: fragments of orange cork, with polyhedral cells; fragments of parenchyma with polyhedral or subrectangular cells, many of which contain small needle-shaped crystals of calcium oxalate (10-32 µm) clearly visible in polarised light; sclereids, isolated or in small groups, with very thick, channelled walls, variable in shape (35-65 µm in diameter); fragments of fibres, isolated or in bundles, with moderately thickened and slightly pitted walls (40 µm in diameter); fragments of short, reticulate or pitted vessels, usually included in parenchyma with thin-walled cells; fragments of oil glands with thin-walled cells and granular orange-brown contents. Examine under a microscope, without heating, using *glycerol R*; the powder shows numerous pieces of inulin, free or included in parenchyma cells.

C. Examine the chromatograms obtained in the test for *Atractylodes lancea*.

Results: see below the sequence of zones present in the chromatograms obtained with the reference solution and the test solution. Furthermore, other faint zones may be present in the chromatogram obtained with the test solution.

Herbal drugs

Top of the plate	
β-Caryophyllene: a pink zone	A pink or violet zone
	An orange zone
_____	_____
	A very faint violet zone
_____	_____
Bornyl acetate: a brown zone	
	A very faint violet zone
	Several faint violet zones
Reference solution	**Test solution**

D. To 0.5 g of the powdered herbal drug (355) (*2.9.12*) add 5 mL of *ethanol (96 per cent) R*, heat in a water-bath at 60 °C for 2 min and filter. To 1 mL of the filtrate add 0.25 mL of a solution freshly prepared as follows: dissolve 5 mg of *vanillin R* in 0.5 mL of *ethanol (96 per cent) R*, to this solution add 0.5 mL of *water R* and 3 mL of *hydrochloric acid R*. Shake immediately; a red or reddish-purple colour develops and persists.

TESTS

Atractylodes lancea. Thin-layer chromatography (*2.2.27*).

Test solution. Introduce 0.5 g of the powdered herbal drug (355) (*2.9.12*) into a centrifuge tube, add 2 mL of *methanol R* and stopper the tube. Sonicate at 25 °C for 15 min and centrifuge.

Reference solution. Dissolve 10 mg of *β-caryophyllene R* and 10 mg of *bornyl acetate R* in 5 mL of *methanol R*.

Plate: *TLC silica gel plate R* (5-40 µm) [or *TLC silica gel plate R* (2-10 µm)].

Mobile phase: *ethyl acetate R*, *heptane R* (5:95 *V/V*).

Application: 5 µL [or 3 µL] as bands of 10 mm [or 6 mm].

Development: in an unsaturated tank, over a path of 10 cm [or 6 cm].

Drying: in air.

Detection: treat with *anisaldehyde solution R* and heat at 105-110 °C for 5-10 min; examine in daylight.

Results: the chromatogram obtained with the test solution shows no greyish-green zone in the middle third, above the very faint violet zone.

Water (*2.2.13*): maximum 100 mL/kg, determined on 20.0 g of the powdered herbal drug (710) (*2.9.12*).

Total ash (*2.4.16*): maximum 5.0 per cent.

Ash insoluble in hydrochloric acid (*2.8.1*): maximum 1.0 per cent.

ASSAY

Essential oil (*2.8.12*). Use 15.0 g of freshly powdered herbal drug (710) (*2.9.12*), a 500 mL round-bottomed flask, 200 mL of *water R* as the distillation liquid and 0.50 mL of *xylene R* in the graduated tube. Distil at a rate of 2-3 mL/min for 2 h.

04/2011:2438

BAICAL SKULLCAP ROOT

Scutellariae baicalensis radix

DEFINITION

Dried, peeled, usually fragmented root of *Scutellaria baicalensis* Georgi without rootlets. It is collected in spring or autumn.

Content: not less than 9.0 per cent of baicalin ($C_{21}H_{18}O_{11}$; M_r 446.4) (dried drug).

IDENTIFICATION

A. The root is conical, twisted and, if not reduced in size, 8-25 cm long and 1-3 cm in diameter. The outer surface is brownish-yellow or dark yellow, bearing sparse, warty traces of rootlets, the upper part rough, with twisted longitudinal wrinkles or irregular reticula, the lower part with longitudinal striations and fine wrinkles. Texture hard and fragile, easily broken, fracture yellow, reddish-brown in the centre; the central part of an old root dark brown or brownish-black, withered or hollowed.

B. Microscopic examination (*2.8.23*). The powder is yellow or light brown. Examine under a microscope using *chloral hydrate solution R*. The powder shows the following diagnostic characters: phloem fibres, single or in bundles, fusiform, 60-250 µm long, 9-33 µm in diameter, with thick, channelled walls; stone cells sub-spherical, square or rectangular with rounded edges, with thickened walls, sometimes heavily; cork cells polygonal and brownish-yellow; numerous reticulated vessels, 24-72 µm in diameter; lignified fibres frequently broken, about 12 µm in diameter, with sparse, oblique pits. Examine under a microscope using a 50 per cent *V/V* solution of *glycerol R*. The powder shows abundant starch granules, simple, spheroidal, 2-10 µm in diameter, with a distinct hilum, or compound with 2-3 components.

C. Thin-layer chromatography (*2.2.27*).

Test solution. To 1 g of the powdered herbal drug (355) (*2.9.12*) add 10 mL of *methanol R* and sonicate for 10 min. Centrifuge and use the supernatant.

Reference solution. Dissolve 1 mg of *baicalin R* and 1 mg of *acteoside R* in 10 mL of *methanol R*.

Plate: *TLC silica gel F_{254} plate R* (2-10 µm).

Mobile phase: *acetic acid R*, *formic acid R*, *water R*, *ethyl acetate R* (1:1:2:15 *V/V/V/V*).

Application: 10 µL as bands.

Development: over a path of 6 cm.

Drying: in air.

Detection: heat at 100-105 °C for 3 min, treat with a 10 g/L solution of *diphenylboric acid aminoethyl ester R* in *methanol R*, then treat with a 50 g/L solution of *macrogol 400 R* in *methanol R*, allow to dry in air for 30 min and examine in ultraviolet light at 365 nm.

Results: see below the sequence of zones present in the chromatograms obtained with the reference solution and the test solution. Furthermore, other faint blue fluorescent zones may be present in the chromatogram obtained with the test solution.

Top of the plate	
	3-4 fluorescent zones
_____	_____
	2 fluorescent zones
_____	_____
Verbascoside: a blue fluorescent zone	A strong blue fluorescent zone
	A blue fluorescent zone
Baicalin: a black zone	A black zone
	A weak yellow fluorescent zone
Reference solution	**Test solution**

TESTS

Loss on drying (*2.2.32*): maximum 12.0 per cent, determined on 1.000 g of the powdered herbal drug (355) (*2.9.12*) by drying in an oven at 105 °C for 2 h.

Total ash (*2.4.16*): maximum 6.0 per cent.

Herbal drugs

Ash insoluble in hydrochloric acid (*2.8.1*): maximum 2.0 per cent.

ASSAY

Liquid chromatography (*2.2.29*).

Test solution. To 0.300 g of the powdered herbal drug (355) (*2.9.12*) add 40 mL of *ethanol (70 per cent V/V) R*, heat under a reflux condenser on a water bath for 3 h, cool and filter. Transfer the filtrate to a 100 mL volumetric flask. Wash both the container and the residue several times with a small volume of *ethanol (70 per cent V/V) R* and filter the washings into the same flask. Dilute to 100.0 mL with *ethanol (70 per cent V/V) R*. Mix well. Dilute 1.0 mL of the solution to 10.0 mL with *methanol R*. Mix well.

Reference solution (a). Dissolve 5.0 mg of *baicalin CRS* in *methanol R* and dilute to 100.0 mL with the same solvent.

Reference solution (b). Dissolve 2 mg of *methyl parahydroxybenzoate R* in *methanol R*, add 20 mL of reference solution (a) and dilute to 100 mL with *methanol R*.

Column:

- *size*: *l* = 0.125 m, Ø = 4 mm;
- *stationary phase*: *octadecylsilyl silica gel for chromatography R* (5 µm).

Mobile phase:

- *mobile phase A*: 0.1 per cent *V/V* solution of *phosphoric acid R*;
- *mobile phase B*: *acetonitrile R*;

Time (min)	Mobile phase A (per cent *V/V*)	Mobile phase B (per cent *V/V*)
0 - 30	90 → 60	10 → 40

Flow rate: 1.0 mL/min.

Detection: spectrophotometer at 280 nm.

Injection: 10 µL.

Retention time: methyl parahydroxybenzoate = about 15 min; baicalin = about 16 min.

System suitability: reference solution (b):

- *resolution*: minimum 3 between the peaks due to methyl parahydroxybenzoate and baicalin.

Calculate the percentage content of baicalin using the following expression:

$$\frac{m_2 \times S_1 \times 10 \times p}{S_2 \times m_1}$$

m_1 = mass of the herbal drug, in grams;

m_2 = mass of baicalin used to prepare reference solution (a), in grams;

S_1 = area of the peak due to baicalin in the chromatogram obtained with the test solution;

S_2 = area of the peak due to baicalin in the chromatogram obtained with reference solution (a);

p = percentage content of baicalin in *baicalin CRS*.

STORAGE

Protected from moisture.

07/2013:1054

BEARBERRY LEAF

Uvae ursi folium

DEFINITION

Whole or fragmented, dried leaf of *Arctostaphylos uva-ursi* (L.) Spreng.

Content: minimum 7.0 per cent of anhydrous arbutin ($C_{12}H_{16}O_7$; M_r 272.3) (dried drug).

IDENTIFICATION

A. The leaf, shiny and dark green on the adaxial surface, lighter on the abaxial surface, is generally 7-30 mm long and 5-12 mm wide. The entire leaf is obovate with smooth margins, somewhat reflexed downwards, narrowing at the base into a short petiole. The leaf is obtuse or retuse at its apex. The lamina is thick and coriaceous. The venation, pinnate and finely reticulate, is clearly visible on both surfaces. The adaxial surface is marked with sunken veinlets, giving it a characteristic grainy appearance. Only the young leaf has ciliated margins. Old leaves are glabrous.

B. Microscopic examination (*2.8.23*). The powder is green, greenish-grey or yellowish-green. Examine under a microscope using *chloral hydrate solution R*. The powder shows the following diagnostic characters (Figure 1054.-1): fragments of adaxial epidermis in surface view [A] showing thick and irregularly pitted polygonal cells [Aa] usually accompanied by palisade parenchyma [Ab]; fragments of adaxial epidermis in transverse section [G], showing straight-walled cells [Ga] covered by a thick smooth cuticle [Gb], and accompanied by palisade parenchyma [Gc] consisting of 3 or 4 layers of cells of unequal lengths, some of which contain numerous prisms of calcium oxalate [Gd]; fragments of abaxial epidermis, in surface view [B, E], showing anomocytic stomata (*2.8.3*) [Ba] surrounded by 5-11 subsidiary cells, scars of hair bases [Ea], and accompanied by spongy parenchyma [Eb]; groups of lignified fibres from the pericycle [D]; fragments of the vascular system [F] consisting of pitted vessels [Fa] and fibres [Fb] accompanied by rows of cells containing prisms of calcium oxalate [Fc]; oil droplets are present in the parenchymatous cells; occasional fragments of conical, unicellular covering trichomes [C].

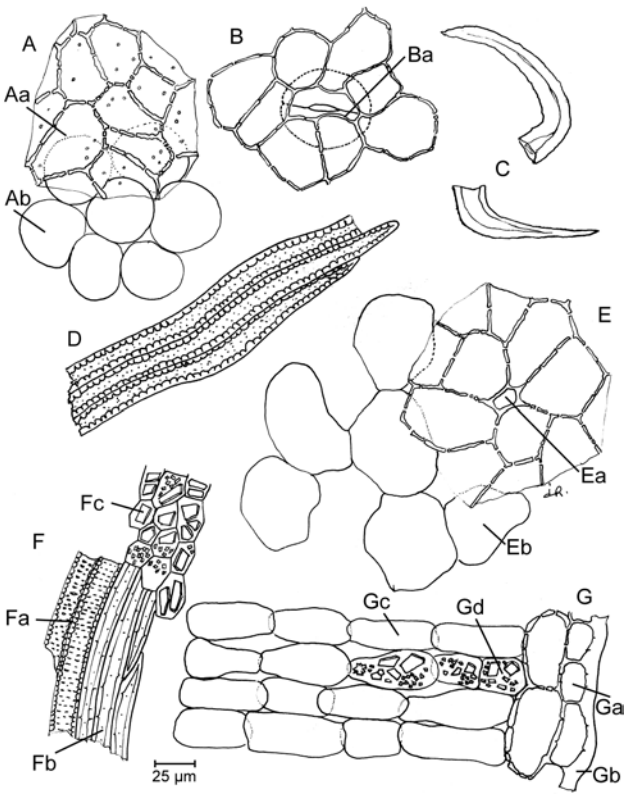

Figure 1054.-1. – *Illustration for identification test B of powdered herbal drug of bearberry leaf*

C. Thin-layer chromatography (*2.2.27*).

Test solution. To 0.5 g of the powdered herbal drug (355) (*2.9.12*) add 5 mL of a mixture of equal volumes of *methanol R* and *water R*, and heat under a reflux condenser for 10 min. Filter whilst hot. Wash the flask and the filter with a mixture of equal volumes of *methanol R* and *water R* and dilute to 5 mL with the same mixture of solvents.

Reference solution. Dissolve 50 mg of *arbutin R* and 25 mg of *gallic acid R* in *methanol R* and dilute to 20.0 mL with the same solvent.

Plate: *TLC silica gel plate R* (5-40 µm) [or *TLC silica gel plate R* (2-10 µm)].

Mobile phase: *anhydrous formic acid R*, *water R*, *ethyl acetate R* (6:6:88 *V/V/V*).

Application: 10 µL [or 2 µL] as bands of 15 mm [or 8 mm].

Development: over a path of 15 cm [or 6 cm].

Drying: at 105-110 °C until the mobile phase has evaporated.

Detection: treat with a 10 g/L solution of *dichloroquinonechlorimide R* in *methanol R*, then treat with a 20 g/L solution of *anhydrous sodium carbonate R*.

Results: see below the sequence of zones present in the chromatograms obtained with the reference solution and the test solution. Furthermore, other blue or brown zones may be present in the chromatogram obtained with the test solution.

Top of the plate	
Gallic acid: a brownish zone	A brownish zone
	A brown zone
Arbutin: a blue zone	An intense blue zone (arbutin)
Reference solution	**Test solution**

TESTS

Foreign matter (*2.8.2*): maximum 5 per cent of stems and maximum 3 per cent of other foreign matter.

Leaves of different colour: maximum 10 per cent, determined in the same manner as foreign matter (*2.8.2*).

Loss on drying (*2.2.32*): maximum 10.0 per cent, determined on 1.000 g of the powdered herbal drug (355) (*2.9.12*) by drying in an oven at 105 °C for 2 h.

Total ash (*2.4.16*): maximum 5.0 per cent.

ASSAY

Liquid chromatography (*2.2.29*).

Test solution. In a 100 mL flask with a ground-glass neck, place 0.800 g of the powdered herbal drug (250) (*2.9.12*). Add 20 mL of *water R* and heat under a reflux condenser on a water-bath for 30 min. Allow to cool and filter the liquid through a plug of absorbent cotton. Add the absorbent cotton to the residue in the 100 mL flask and extract with 20 mL of *water R* under a reflux condenser on a water-bath for 30 min. Allow to cool and filter through a paper filter. Combine the filtrates and dilute to 50.0 mL with *water R*. Filter through a paper filter. Discard the first 10 mL of the filtrate.

Reference solution (a). Dissolve 50.0 mg of *arbutin CRS* in the mobile phase and dilute to 50.0 mL with the mobile phase.

Reference solution (b). Dissolve 2.5 mg of *hydroquinone R* in the mobile phase and dilute to 10.0 mL with the mobile phase. To 5.0 mL of the solution, add 2.5 mL of reference solution (a) and dilute to 10.0 mL with the mobile phase.

Column:
- *size*: *l* = 0.25 m, Ø = 4 mm;
- *stationary phase*: *base-deactivated octadecylsilyl silica gel for chromatography R* (5 µm).

Mobile phase: *methanol R*, *water R* (10:90 *V/V*).

Flow rate: 1.2 mL/min.

Detection: spectrophotometer at 280 nm.

Injection: 20 µL.

System suitability: reference solution (b):
- *resolution*: minimum 4.0 between the peaks due to arbutin and hydroquinone.

Calculate the percentage content of arbutin using the following expression:

$$\frac{F_1 \times m_2 \times p}{F_2 \times m_1}$$

F_1 = area of the peak due to arbutin in the chromatogram obtained with the test solution;

F_2 = area of the peak due to arbutin in the chromatogram obtained with reference solution (a);

m_1 = mass of the herbal drug to be examined used to prepare the test solution, in grams;

m_2 = mass of *arbutin CRS* used to prepare reference solution (a), in grams;

p = percentage content of arbutin in *arbutin CRS*.

01/2014:2561

BELAMCANDA CHINENSIS RHIZOME

Belamcandae chinensis rhizoma

DEFINITION

Dried, whole or fragmented rhizome of *Iris domestica* (L.) Goldblatt et Mabb. (syn. *Belamcanda chinensis* (L.) DC.), collected in early spring while the plant is budding or in late autumn while the aerial part is withering, with roots removed.

Content: minimum 0.10 per cent of irisflorentin ($C_{20}H_{18}O_8$; M_r 386.4) (dried drug).

IDENTIFICATION

A. The whole rhizome is nodular, rounded, about 3-10 cm long and 1-2 cm in diameter, irregular, more or less branched, with numerous annular striations; there are crateriform, annular stem scars on the upper surface and small roots about 2-3 mm in diameter on the lower surface. The longitudinally fragmented rhizome is found as pieces about 2-8 cm long, 2 cm wide and 1 cm thick; stem scars and root fragments are present. The orange-brown or dark brown outer surface is the same colour as the fracture. The central parenchyma has a pitted appearance due to the numerous primary vascular bundles. The texture is hard. The fracture is granular.

B. Microscopic examination (*2.8.23*). The powder is orange-brown or dark brown. Examine under a microscope using *chloral hydrate solution R*. The powder shows the following diagnostic characters: rare fragments of brown cork with superimposed polyhedral cells; numerous, somewhat rounded parenchyma cells with irregularly thickened and pitted walls, granular and oily contents, with some of the cells containing a very large calcium oxalate prism up to 250 µm long and about 50 µm in diameter; very numerous free calcium oxalate prisms, usually broken; reticulate or pitted lignified vessels. Examine under a

Herbal drugs

microscope using a 50 per cent *V/V* solution of *glycerol R*. The powder shows very numerous rounded or ovoid starch granules, 3-15 µm in diameter, simple or rarely compound with 2-5 components. The punctiform hilum is sometimes visible. The starch granules are free and very often included in the parenchymatous cells.

C. Examine the chromatograms obtained in the test for *Iris tectorum* Maxim.

Results A: see below the sequence of zones present in the chromatograms obtained with the reference solution and the test solution. Furthermore, other faint zones may be present in the chromatogram obtained with the test solution.

Top of the plate	
Coumarin: a quenching zone	A quenching zone
Irisflorentin: a quenching zone	A quenching zone (irisflorentin)
Reference solution	**Test solution**

Results B: see below the sequence of zones present in the chromatograms obtained with the reference solution and the test solution. Furthermore, other faint fluorescent zones may be present in the chromatogram obtained with the test solution.

Top of the plate	
Coumarin: a faint dark blue fluorescent zone	A faint blue fluorescent zone
	A black zone
	A broad blue fluorescent zone
Irisflorentin: a blue fluorescent zone	A blue fluorescent zone (irisflorentin)
Reference solution	**Test solution**

TESTS

***Iris tectorum* Maxim**. Thin-layer chromatography (*2.2.27*).

Test solution. To 0.5 g of the powdered herbal drug (355) (*2.9.12*) add 5 mL of *methanol R* and sonicate for 10 min. Centrifuge and filter.

Reference solution. Dissolve 1 mg of *irisflorentin R* and 1 mg of *coumarin R* in 4 mL of *methanol R*.

Plate: *TLC silica gel F_{254} plate R* (2-10 µm).

Mobile phase: *glacial acetic acid R*, *cyclohexane R*, *ethyl acetate R* (1:20:80 *V/V/V*).

Application: 4 µL as bands of 8 mm.

Development: over a path of 6 cm.

Drying: in air.

Detection A: examine in ultraviolet light at 254 nm.

Results A: the chromatogram obtained with the test solution shows no quenching zone between the zones due to coumarin and irisflorentin in the chromatogram obtained with the reference solution. No quenching zones are present in the lower third of the chromatogram obtained with the test solution.

Detection B: examine in ultraviolet light at 365 nm.

Results B: the chromatogram obtained with the test solution shows no pale blue fluorescent zone above the zone due to coumarin in the chromatogram obtained with the reference solution.

Loss on drying (*2.2.32*): maximum 10.0 per cent, determined on 1.000 g of the powdered herbal drug (355) (*2.9.12*) by drying in an oven at 105 °C for 2 h.

Total ash (*2.4.16*): maximum 7.0 per cent.

Ash insoluble in hydrochloric acid (*2.8.1*): maximum 1.0 per cent.

ASSAY

Liquid chromatography (*2.2.29*).

Test solution. Disperse 0.100 g of the powdered herbal drug (355) (*2.9.12*) in 10 mL of *ethanol (70 per cent V/V) R* in a 50 mL centrifuge tube. Sonicate for 30 min. Mix and centrifuge for 5 min. Transfer the supernatant to a 25 mL volumetric flask. Add to the residue 10 mL of *ethanol (70 per cent V/V) R* and sonicate for 30 min. Filter and add the filtrate to the same volumetric flask. Dilute to 25.0 mL with *ethanol (70 per cent V/V) R* and mix. Filter through a membrane filter (nominal pore size 0.45 µm).

Reference solution (a). Dissolve 5.0 mg of *irisflorentin CRS* in *ethanol (70 per cent V/V) R* and dilute to 50.0 mL with the same solvent. Dilute 5.0 mL of the solution to 50.0 mL with *ethanol (70 per cent V/V) R*.

Reference solution (b). Disperse 0.10 g of *belamcanda chinensis rhizome HRS* in 10 mL of *ethanol (70 per cent V/V) R* in a 50 mL centrifuge tube. Sonicate for 30 min. Mix and centrifuge for 5 min. Transfer the supernatant to a 25 mL volumetric flask. Add to the residue 10 mL of *ethanol (70 per cent V/V) R* and sonicate for 30 min. Filter and add the filtrate to the same volumetric flask. Dilute to 25.0 mL with *ethanol (70 per cent V/V) R* and mix. Filter through a membrane filter (nominal pore size 0.45 µm).

Column:

- *size*: *l* = 0.25 m, Ø = 4.6 mm;
- *stationary phase*: *octadecylsilyl silica gel for chromatography R* (5 µm).

Mobile phase:

- *mobile phase A*: 0.05 per cent *V/V* solution of *phosphoric acid R*;
- *mobile phase B*: *acetonitrile R*;

Time (min)	Mobile phase A (per cent *V/V*)	Mobile phase B (per cent *V/V*)
0 - 5	82	18
5 - 20	82 → 80	18 → 20
20 - 30	80 → 67	20 → 33
30 - 50	67 → 60	33 → 40
50 - 65	60 → 47	40 → 53

Flow rate: 1.0 mL/min.

Detection: spectrophotometer at 266 nm.

Injection: 10 µL.

Identification of peaks: use the chromatogram obtained with reference solution (a) to identify the peak due to irisflorentin; use the chromatogram supplied with *belamcanda chinensis rhizome HRS* and the chromatogram obtained with reference solution (b) to identify the peaks due to tectoridin and peak 2 (unknown).

Retention time: irisflorentin = about 54 min.

System suitability: reference solution (b):

- *resolution*: minimum 1.5 between the peak due to tectoridin and peak 2.

Herbal drugs

Calculate the percentage content of irisflorentin using the following expression:

$$\frac{A_1 \times m_2 \times p}{A_2 \times m_1 \times 20}$$

A_1 = area of the peak due to irisflorentin in the chromatogram obtained with the test solution;

A_2 = area of the peak due to irisflorentin in the chromatogram obtained with reference solution (a);

m_1 = mass of the herbal drug to be examined used to prepare the test solution, in grams;

m_2 = mass of *irisflorentin CRS* used to prepare reference solution (a), in grams;

p = percentage content of irisflorentin in *irisflorentin CRS*.

01/2012:0221

BELLADONNA LEAF

Belladonnae folium

DEFINITION

Dried leaf or dried leaf and flowering, and occasionally fruit-bearing, tops of *Atropa belladonna* L.

Content: minimum 0.30 per cent of total alkaloids, expressed as hyoscyamine ($C_{17}H_{23}NO_3$; M_r 289.4) (dried drug). The alkaloids consist mainly of hyoscyamine together with small quantities of hyoscine (scopolamine).

CHARACTERS

Slightly nauseous odour.

IDENTIFICATION

A. The leaves are green or brownish-green, slightly darker on the upper surface, often crumpled and rolled and partly matted together in the drug. The leaf is petiolate and the lamina is acute and decurrent. The margin is entire. The flowering stems are flattened and bear at each node a pair of leaves unequal in size, in the axils of which occur singly the flowers or occasionally fruits. The flowers have a gamosepalous calyx and campanulate corolla. The drug may contain fruits, as globular berries, green or brownish-black and surrounded by the persistent calyx with widely spread lobes.

B. Microscopic examination (*2.8.23*). The powder is dark green. Examine under a microscope using *chloral hydrate solution R*. The powder shows the following diagnostic characters (Figure 0221.-1): fragments of the lamina showing sinuous-walled epidermal cells with striated cuticle [A, C] and part of the underlying palisade parenchyma [Aa] associated with the upper epidermis [A]; numerous stomata [Ca] more frequent on the lower epidermis [C], anisocytic and also some anomocytic (*2.8.3*); multicellular, uniseriate covering trichomes with a smooth cuticle [F], glandular trichomes with unicellular heads and multicellular, uniseriate stalks [D] or with multicellular heads and unicellular stalks [B]; parenchyma cells including rounded cells, some of which contain microsphenoidal crystals of calcium oxalate [E]; annularly and spirally thickened vessels [K]. The powdered herbal drug may also show: fibres and reticulately thickened vessels from the stems; subspherical pollen grains, 40-50 µm in diameter, with 3 germinal pores, 3 furrows and an extensively pitted exine [H]; fragments of the corolla with a papillose epidermis [J] or bearing numerous covering or glandular trichomes of the types previously described [L]; fragments of the brownish-yellow testa consisting of irregularly sclerified cells [G].

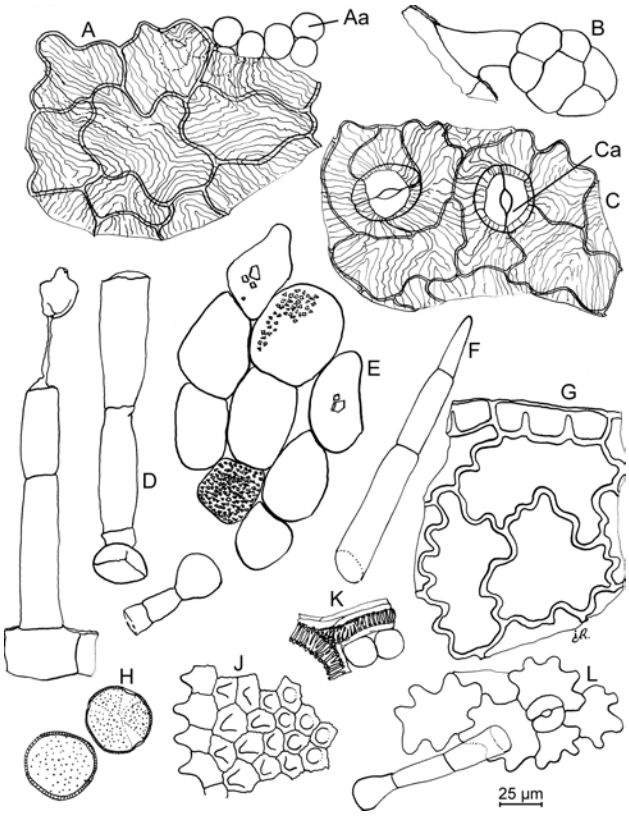

Figure 0221.-1. – *Illustration for identification test B of powdered herbal drug of belladonna leaf*

C. Shake 1 g of the powdered herbal drug (180) (*2.9.12*) with 10 mL of *0.05 M sulfuric acid* for 2 min. Filter and add to the filtrate 1 mL of *concentrated ammonia R* and 5 mL of *water R*. Shake cautiously with 15 mL of *ether R*, avoiding formation of an emulsion. Separate the ether layer and dry over *anhydrous sodium sulfate R*. Filter and evaporate the ether in a porcelain dish. Add 0.5 mL of *fuming nitric acid R* and evaporate to dryness on a water-bath. Add 10 mL of *acetone R* and, dropwise, a 30 g/L solution of *potassium hydroxide R* in *ethanol (96 per cent) R*. A deep violet colour develops.

D. Examine the chromatograms obtained in the chromatography test.

Results: the principal zones in the chromatograms obtained with the test solution are similar in position, colour and size to the principal zones in the chromatograms obtained with the same volume of the reference solution.

TESTS

Chromatography. Thin-layer chromatography (*2.2.27*).

Test solution. To 0.6 g of the powdered herbal drug (180) (*2.9.12*) add 15 mL of *0.05 M sulfuric acid*, shake for 15 min and filter. Wash the filter with *0.05 M sulfuric acid* until 20 mL of filtrate is obtained. To the filtrate add 1 mL of *concentrated ammonia R* and shake with 2 quantities, each of 10 mL, of *peroxide-free ether R*. If necessary, separate by centrifugation. Dry the combined ether layers over *anhydrous sodium sulfate R*, filter and evaporate to dryness on a water-bath. Dissolve the residue in 0.5 mL of *methanol R*.

Reference solution. Dissolve 50 mg of *hyoscyamine sulfate R* in 9 mL of *methanol R*. Dissolve 15 mg of *hyoscine hydrobromide R* in 10 mL of *methanol R*. Mix 1.8 mL of the hyoscine hydrobromide solution and 8 mL of the hyoscyamine sulfate solution.

Plate: *TLC silica gel G plate R*.

Mobile phase: *concentrated ammonia R*, *water R*, *acetone R* (3:7:90 *V/V/V*).

Herbal drugs

Application: 10 µL and 20 µL, as bands of 20 mm by 3 mm, leaving 1 cm between the bands.

Development: over a path of 10 cm.

Drying: at 100-105 °C for 15 min; allow to cool.

Detection A: spray with *potassium iodobismuthate solution R2*, using about 10 mL for a plate 200 mm square, until the orange or brown zones become visible against a yellow background.

Results A: the zones in the chromatograms obtained with the test solution are similar in position (hyoscyamine in the lower third, hyoscine in the upper third of the chromatograms) and colour to the bands in the chromatograms obtained with the reference solution. The zones in the chromatograms obtained with the test solution are at least equal in size to the corresponding zones in the chromatogram obtained with the same volume of the reference solution. Faint secondary zones may appear, particularly in the middle of the chromatogram obtained with 20 µL of the test solution or near the starting point in the chromatogram obtained with 10 µL of the test solution.

Detection B: spray with *sodium nitrite solution R* until the coating is transparent; examine after 15 min.

Results B: the zones due to hyoscyamine in the chromatograms obtained with the reference solution and the test solution change from brown to reddish-brown but not to greyish-blue (atropine) and any secondary zones disappear.

Foreign matter (*2.8.2*): maximum 3 per cent of stems with a diameter greater than 5 mm.

Total ash (*2.4.16*): maximum 16.0 per cent.

Ash insoluble in hydrochloric acid (*2.8.1*): maximum 4.0 per cent.

ASSAY

a) Determine the loss on drying (*2.2.32*) on 2.000 g of the powdered herbal drug (180) (*2.9.12*), by drying in an oven at 105 °C.

b) Moisten 10.00 g of the powdered herbal drug (180) (*2.9.12*) with a mixture of 5 mL of *ammonia R*, 10 mL of *ethanol (96 per cent) R* and 30 mL of *peroxide-free ether R* and mix thoroughly. Transfer the mixture to a suitable percolator, if necessary with the aid of the extracting mixture. Allow to macerate for 4 h and percolate with a mixture of 1 volume of *chloroform R* and 3 volumes of *peroxide-free ether R* until the alkaloids are completely extracted. Evaporate to dryness a few millilitres of the liquid flowing from the percolator, dissolve the residue in *0.25 M sulfuric acid* and verify the absence of alkaloids using *potassium tetraiodomercurate solution R*. Concentrate the percolate to about 50 mL by distilling on a water-bath and transfer it to a separating funnel, rinsing with *peroxide-free ether R*. Add a quantity of *peroxide-free ether R* equal to at least 2.1 times the volume of the percolate to produce a liquid of a density well below that of water. Shake the solution with no fewer than 3 quantities, each of 20 mL, of *0.25 M sulfuric acid*, separate the 2 layers by centrifugation if necessary and transfer the acid layers to a 2nd separating funnel. Make the acid layer alkaline with *ammonia R* and shake with 3 quantities, each of 30 mL, of *chloroform R*. Combine the chloroform layers, add 4 g of *anhydrous sodium sulfate R* and allow to stand for 30 min with occasional shaking. Decant the chloroform and wash the sodium sulfate with 3 quantities, each of 10 mL, of *chloroform R*. Add the washings to the chloroform extract, evaporate to dryness on a water-bath and heat in an oven at 100-105 °C for 15 min. Dissolve the residue in a few millilitres of *chloroform R*, add 20.0 mL of *0.01 M sulfuric acid* and remove the chloroform by evaporation on a water-bath. Titrate the excess of acid with *0.02 M sodium hydroxide* using *methyl red mixed solution R* as indicator.

Calculate the percentage content of total alkaloids, expressed as hyoscyamine, using the following expression:

$$\frac{57.88 \times (20 - n)}{(100 - d) \times m}$$

d = loss on drying, as a percentage;

n = volume of *0.02 M sodium hydroxide*, in millilitres;

m = mass of the powdered herbal drug, in grams.

01/2009:1294

BELLADONNA LEAF DRY EXTRACT, STANDARDISED

Belladonnae folii extractum siccum normatum

DEFINITION

Standardised dry extract obtained from *Belladonna leaf (0221)*.

Content: 0.95 per cent to 1.05 per cent of total alkaloids, expressed as hyoscyamine ($C_{17}H_{23}NO_3$; M_r 289.4) (dried extract).

PRODUCTION

The extract is produced from the herbal drug by a suitable procedure using ethanol (70 per cent *V/V*).

CHARACTERS

Appearance: brown or greenish, hygroscopic powder.

IDENTIFICATION

A. Thin-layer chromatography (*2.2.27*).

Test solution. To 1 g of the extract to be examined add 5.0 mL of *methanol R*. Shake for 2 min and filter.

Reference solution. Dissolve 1.0 mg of *chlorogenic acid R* and 2.5 mg of *rutin R* in 10 mL of *methanol R*.

Plate: *TLC silica gel plate R*.

Mobile phase: *anhydrous formic acid R*, *water R*, *methyl ethyl ketone R*, *ethyl acetate R* (10:10:30:50 *V/V/V/V*).

Application: 20 µL as bands.

Development: over a path of 15 cm.

Drying: at 100-105 °C.

Detection: spray the warm plate with a 10 g/L solution of *diphenylboric acid aminoethyl ester R* in *methanol R*, then spray with a 50 g/L solution of *macrogol 400 R* in *methanol R*; allow to dry in air for 30 min and examine in ultraviolet light at 365 nm.

Results: the chromatograms obtained with the reference solution and the test solution show in the central part a light blue fluorescent zone (chlorogenic acid) and in the lower part a yellowish-brown fluorescent zone (rutin); furthermore, the chromatogram obtained with the test solution shows a little above the start a yellowish-brown fluorescent zone and directly above that a yellow fluorescent zone, and a yellow or yellowish-brown fluorescent zone between the zone due to rutin and the zone due to chlorogenic acid. Further zones may be present.

B. Examine the chromatograms obtained in the test for atropine.

Results: the principal zones in the chromatogram obtained with the test solution are similar in position and colour to the principal zones in the chromatogram obtained with the reference solution.

Herbal drugs

TESTS

Atropine. Thin-layer chromatography (*2.2.27*).

Test solution. To 0.20 g of the extract to be examined add 10.0 mL of *0.05 M sulfuric acid*, shake for 2 min and filter. Add 1.0 mL of *concentrated ammonia R* and shake with 2 quantities, each of 10 mL, of *peroxide-free ether R*. If necessary, separate by centrifugation. Dry the combined ether layers over about 2 g of *anhydrous sodium sulfate R*, filter and evaporate to dryness on a water-bath. Dissolve the residue in 0.5 mL of *methanol R*.

Reference solution. Dissolve 50 mg of *hyoscyamine sulfate R* in 9 mL of *methanol R*. Dissolve 15 mg of *hyoscine hydrobromide R* in 10 mL of *methanol R*. Mix 1.8 mL of the hyoscine hydrobromide solution and 8 mL of the hyoscyamine sulfate solution.

Plate: *TLC silica gel plate R*.

Mobile phase: *concentrated ammonia R*, *water R*, *acetone R* (3:7:90 *V/V/V*).

Application: 20 µL as bands.

Development: over a path of 10 cm.

Drying: at 100-105 °C for 15 min; allow to cool.

Detection A: spray with *potassium iodobismuthate solution R2*, until orange or brown zones become visible against a yellow background.

Results A: the zones in the chromatogram obtained with the test solution are similar in position (hyoscyamine in the lower third, hyoscine in the upper third) and colour to those in the chromatogram obtained with the reference solution. Other faint zones may be present in the chromatogram obtained with the test solution.

Detection B: spray with *sodium nitrite solution R* until the coating is transparent and examine after 15 min.

Results B: the zones due to hyoscyamine in the chromatograms obtained with the test solution and the reference solution change from orange or brown to reddish-brown but not to greyish-blue (atropine).

Loss on drying (*2.8.17*): maximum 5.0 per cent.

Microbial contamination

TAMC: acceptance criterion 10^4 CFU/g (*2.6.12*).

TYMC: acceptance criterion 10^2 CFU/g (*2.6.12*).

Absence of *Escherichia coli* (*2.6.13*).

Absence of *Salmonella* (*2.6.13*).

ASSAY

At each extraction stage it is necessary to check that the alkaloids have been completely extracted. If the extraction is into the organic phase this is done by evaporating to dryness a few millilitres of the last organic layer, dissolving the residue in *0.25 M sulfuric acid* and verifying the absence of alkaloids using *potassium tetraiodomercurate solution R*. If the extraction is into the acid aqueous phase, this is done by taking a few millilitres of the last acid aqueous phase and verifying the absence of alkaloids using *potassium tetraiodomercurate solution R*.

Disperse 3.00 g in a mixture of 5 mL of *ammonia R* and 15 mL of *water R*. Shake with no fewer than 3 quantities, each of 40 mL, of a mixture of 1 volume of *methylene chloride R* and 3 volumes of *peroxide-free ether R* until the alkaloids are completely extracted. Concentrate the combined organic layers to about 50 mL by distilling on a water-bath and transfer the resulting liquid to a separating funnel, rinsing with *peroxide-free ether R*. Add a quantity of *peroxide-free ether R* equal to at least 2.1 times the volume of the liquid to produce a layer having a density well below that of water. Shake the resulting solution with no fewer than 3 quantities, each of 20 mL, of *0.25 M sulfuric acid* until the alkaloids are completely extracted. Separate the layers by centrifugation, if necessary, and transfer the acid layers to a 2nd separating funnel. Make the combined acid layers alkaline with *ammonia R* and shake with no fewer than 3 quantities, each of 30 mL, of *methylene chloride R* until the alkaloids are completely extracted. Combine the organic layers, add 4 g of *anhydrous sodium sulfate R* and allow to stand for 30 min with occasional shaking. Decant the methylene chloride and wash the sodium sulfate with 3 quantities, each of 10 mL, of *methylene chloride R*. Combine the organic extracts and evaporate to dryness on a water-bath. Heat the residue in an oven at 100-105 °C for 15 min. Dissolve the residue in a few millilitres of *methylene chloride R*, evaporate to dryness on a water-bath and again heat the residue in an oven at 100-105 °C for 15 min. Dissolve the residue in a few millilitres of *methylene chloride R*, add 20.0 mL of *0.01 M sulfuric acid* and remove the methylene chloride by evaporation on a water-bath. Titrate the excess of acid with *0.02 M sodium hydroxide* using *methyl red mixed solution R* as indicator.

Calculate the percentage content of total alkaloids, expressed as hyoscyamine, using the following expression:

$$\frac{57.88 \times (20 - n)}{100 \times m}$$

n = volume of *0.02 M sodium hydroxide* used, in millilitres;

m = mass of the herbal drug used, in grams.

01/2008:1812

BELLADONNA LEAF TINCTURE, STANDARDISED

Belladonnae folii tinctura normata

DEFINITION

Tincture produced from *Belladonna leaf (0221)*.

Content: 0.027 per cent to 0.033 per cent of total alkaloids, calculated as hyoscyamine ($C_{17}H_{23}NO_3$; M_r 289.4). The alkaloids consist mainly of hyoscyamine together with small quantities of hyoscine.

PRODUCTION

The tincture is produced from 1 part of the powdered herbal drug (355) (*2.9.12*) and 10 parts of ethanol (70 per cent *V/V*) by a suitable procedure.

IDENTIFICATION

A. Thin-layer chromatography (*2.2.27*).

Test solution. Evaporate to dryness 10.0 mL of the tincture to be examined in a water-bath at 40 °C under reduced pressure. Dissolve the residue in 1.0 mL of *methanol R*.

Reference solution. Dissolve 1.0 mg of *chlorogenic acid R* and 2.5 mg of *rutin R* in 10 mL of *methanol R*.

Plate: *TLC silica gel plate R*.

Mobile phase: *anhydrous formic acid R*, *water R*, *methyl ethyl ketone R*, *ethyl acetate R* (10:10:30:50 *V/V/V/V*).

Application: 40 µL as bands.

Development: over a path of 15 cm.

Drying: at 100-105 °C.

Detection: spray the warm plate with a 10 g/L solution of *diphenylboric acid aminoethyl ester R* in *methanol R*; subsequently spray the plate with a 50 g/L solution of *macrogol 400 R* in *methanol R*; allow the plate to dry in air for 30 min and examine in ultraviolet light at 365 nm.

Results: see below the sequence of zones present in the chromatograms obtained with the reference solution and the test solution. Furthermore, other fluorescent zones may be present in the chromatogram obtained with the test solution.

Herbal drugs

Top of the plate	
———	———
Chlorogenic acid: a light blue fluorescent zone	A light blue fluorescent zone (chlorogenic acid) A yellow or yellowish-brown fluorescent zone
———	———
Rutin: a yellowish-brown fluorescent zone	A bluish-grey fluorescent zone A yellow fluorescent zone A yellowish-brown fluorescent zone
Reference solution	**Test solution**

B. Examine the chromatograms obtained in the test for atropine, detection A.

Results A: see below the sequence of zones present in the chromatograms obtained with the reference solution and the test solution. Faint secondary zones may appear, particularly in the middle of the chromatogram obtained with 40 µL of the test solution or near the point of application in the chromatogram obtained with 20 µL of the test solution.

Top of the plate	
Hyoscine: a brownish-orange zone	A brownish-orange zone (hyoscine)
———	———
	Faint secondary zones
———	———
Hyoscyamine: a brownish-orange zone	A brownish-orange zone (hyoscyamine) Faint secondary zones
Reference solution	**Test solution**

TESTS

Atropine. Thin-layer chromatography (*2.2.27*).

Test solution. To 15.0 mL of the tincture to be examined add 15 mL of *0.05 M sulfuric acid*. Filter. Add 1 mL of *concentrated ammonia R* to the filtrate and shake with 2 quantities, each of 10 mL, of *peroxide-free ether R*. Separate by centrifugation if necessary. Dry the combined ether layers over *anhydrous sodium sulfate R*. Filter and evaporate to dryness on a water-bath. Dissolve the residue in 0.5 mL of *methanol R*.

Reference solution. Dissolve 50 mg of *hyoscyamine sulfate R* in 9 mL of *methanol R*. Dissolve 15 mg of *hyoscine hydrobromide R* in 10 mL of *methanol R*. Mix 1.8 mL of the hyoscine hydrobromide solution and 8 mL of the hyoscyamine sulfate solution.

Plate: *TLC silica gel plate R*.

Mobile phase: *concentrated ammonia R*, *water R*, *acetone R* (3:7:90 *V/V/V*).

Application: 20 µL and 40 µL of each solution, as bands.

Development: over a path of 10 cm.

Drying: at 100-105 °C for 15 min.

Detection A: spray with *potassium iodobismuthate solution R2*.

Detection B: spray with *sodium nitrite solution R* until the plate is transparent. Examine after 15 min.

Results B: the zones due to hyoscyamine in the chromatograms obtained with the test solution and the reference solution change from brownish-orange to reddish-brown but not to greyish-blue (atropine) and any secondary zones disappear.

Ethanol (*2.9.10*): 64 per cent *V/V* to 69 per cent *V/V*.

ASSAY

Evaporate 50.0 g of the tincture to be examined to a volume of about 10 mL. Transfer quantitatively to a separating funnel, with the minimum volume of *alcohol (70 per cent V/V) R*. Add 5 mL of *ammonia R* and 15 mL of *water R*. Shake with not fewer than 3 quantities each of 40 mL of a mixture of 1 volume of *methylene chloride R* and 3 volumes of *peroxide-free ether R*, carefully to avoid emulsion, until the alkaloids are completely extracted. Combine the organic layers and concentrate the solution to a volume of about 50 mL by distilling on a water-bath. Transfer the resulting solution quantitatively to a separating funnel, rinsing with *peroxide-free ether R*. Add a quantity of *peroxide-free ether R* equal to at least 2.1 times the volume of the solution to produce a layer having a density well below that of water. Shake the resulting solution with not fewer than 3 quantities each of 20 mL of *0.25 M sulfuric acid* until the alkaloids are completely extracted. Separate the layers by centrifugation if necessary and transfer the layers to a separating funnel. Make the combined layers alkaline with *ammonia R* and shake with not fewer than 3 quantities each of 30 mL of *methylene chloride R* until the alkaloids are completely extracted. Combine the organic layers, add 4 g of *anhydrous sodium sulfate R* and allow to stand for 30 min with occasional shaking. Decant the methylene chloride and filter. Wash the sodium sulfate with 3 quantities each of 10 mL of *methylene chloride R*. Combine the organic extracts, evaporate to dryness on a water-bath. Heat the residue in an oven at 100-105 °C for 15 min. Dissolve the residue in a few millilitres of *methylene chloride R*, evaporate to dryness on a water-bath and heat the residue in an oven at 100-105 °C for 15 min again. Dissolve the residue in a few millilitres of *methylene chloride R*. Add 20.0 mL of *0.01 M sulfuric acid* and remove the methylene chloride by evaporation on a water-bath. Titrate the excess of acid with *0.02 M sodium hydroxide* using *methyl red mixed solution R* as indicator.

Calculate the percentage content of total alkaloids, expressed as hyoscyamine, using the following expression:

$$\frac{57.88 \times (20 - n)}{100 \times m}$$

n = volume of *0.02 M sodium hydroxide* used, in millilitres,

m = mass of the herbal drug used, in grams.

01/2008:0222

BELLADONNA, PREPARED

Belladonnae pulvis normatus

DEFINITION

Belladonna leaf powder (180) (*2.9.12*) adjusted, if necessary, by adding powdered lactose or belladonna leaf powder with a lower alkaloidal content.

Content: 0.28 per cent to 0.32 per cent of total alkaloids, expressed as hyoscyamine (M_r 289.4) (dried drug).

CHARACTERS

Slightly nauseous odour.

IDENTIFICATION

A. The powder is dark green. Examine under a microscope, using *chloral hydrate solution R*. The powder shows the following diagnostic characters: fragments of leaf lamina showing sinuous-walled epidermal cells, a striated cuticle and numerous stomata predominantly present on the lower epidermis (anisocytic and also some anomocytic) (*2.8.3*); multicellular uniseriate covering trichomes with smooth cuticle, glandular trichomes with unicellular heads and multicellular, uniseriate stalks or with multicellular heads and unicellular stalks; parenchyma cells including

Herbal drugs

rounded cells containing microsphenoidal crystals of calcium oxalate; annular and spirally thickened vessels. The powdered herbal drug may also show the following: fibres and reticulately thickened vessels from the stems; subspherical pollen grains, 40-50 µm in diameter, with 3 germinal pores, 3 furrows and an extensively pitted exine; fragments of the corolla, with a papillose epidermis or bearing numerous covering or glandular trichomes of the types previously described; brownish-yellow seed fragments containing irregularly sclerified and pitted cells of the testa. Examined in *glycerol (85 per cent) R*, the powder may be seen to contain lactose crystals.

B. Shake 1 g with 10 mL of *0.05 M sulfuric acid* for 2 min. Filter and add to the filtrate 1 mL of *concentrated ammonia R* and 5 mL of *water R*. Shake cautiously with 15 mL of *ether R*, avoiding formation of an emulsion. Separate the ether layer and dry over *anhydrous sodium sulfate R*. Filter and evaporate the ether in a porcelain dish. Add 0.5 mL of *fuming nitric acid R* and evaporate to dryness on a water-bath. Add 10 mL of *acetone R* and, dropwise, a 30 g/L solution of *potassium hydroxide R* in *ethanol (96 per cent) R*. A deep violet colour develops.

C. Examine the chromatograms obtained in the test Chromatography.

Results: the principal zones in the chromatograms obtained with the test solution are similar in position, colour and size to the principal zones in the chromatogram obtained with the same volume of the reference solution.

TESTS

Chromatography. Thin-layer chromatography (*2.2.27*).

Test solution. To 0.6 g of the drug to be examined add 15 mL of *0.05 M sulfuric acid*, shake for 15 min and filter. Wash the filter with *0.05 M sulfuric acid* until 20 mL of filtrate is obtained. To the filtrate add 1 mL of *concentrated ammonia R* and shake with 2 quantities, each of 10 mL, of *peroxide-free ether R*. If necessary, separate by centrifugation. Dry the combined ether layers over *anhydrous sodium sulfate R*, filter, and evaporate to dryness on a water-bath. Dissolve the residue in 0.5 mL of *methanol R*.

Reference solution. Dissolve 50 mg of *hyoscyamine sulfate R* in 9 mL of *methanol R*. Dissolve 15 mg of *hyoscine hydrobromide R* in 10 mL of *methanol R*. Mix 1.8 mL of the hyoscine hydrobromide solution and 8 mL of the hyoscyamine sulfate solution.

Plate: *TLC silica gel G plate R*.

Mobile phase: *concentrated ammonia R*, *water R*, *acetone R* (3:7:90 *V/V/V*).

Application: 10 µL and 20 µL of each solution, as bands of 20 mm by 3 mm, leaving 1 cm between each band.

Development: over a path of 10 cm.

Drying: at 100-105 °C for 15 min; allow to cool.

Detection A: spray with *potassium iodobismuthate solution R2*, using about 10 mL for a plate 200 mm square, until orange or brown zones become visible against a yellow background.

Results A: the zones in the chromatograms obtained with the test solution are similar in position (hyoscyamine in the lower third, hyoscine in the upper third) and colour to those in the chromatograms obtained with the reference solution; the zones in the chromatograms obtained with the test solution are at least equal in size to the corresponding zones in the chromatogram obtained with the same volume of the reference solution; faint secondary zones may appear, particularly in the middle of the chromatogram obtained with 20 µL of the test solution or near the point of application in the chromatogram obtained with 10 µL of the test solution.

Detection B: spray with *sodium nitrite solution R* until the coating is transparent and examine after 15 min.

Results B: the zones due to hyoscyamine in the chromatograms obtained with the test solution and the reference solution change from brown to reddish-brown but not to greyish-blue (atropine), and any secondary zones disappear.

Loss on drying (*2.2.32*): maximum 5.0 per cent, determined on 1.000 g by drying in an oven at 105 °C.

Total ash (*2.4.16*): maximum 16.0 per cent.

Ash insoluble in hydrochloric acid (*2.8.1*): maximum 4.0 per cent.

ASSAY

a) Determine the loss on drying (*2.2.32*) on 2.000 g by drying in an oven at 105 °C.

b) Moisten 10.00 g with a mixture of 5 mL of *ammonia R*, 10 mL of *ethanol (96 per cent) R* and 30 mL of *peroxide-free ether R* and mix thoroughly. Transfer the mixture to a suitable percolator, if necessary with the aid of the extracting mixture. Allow to macerate for 4 h and percolate with a mixture of 1 volume of *chloroform R* and 3 volumes of *peroxide-free ether R* until the alkaloids are completely extracted. Evaporate to dryness a few millilitres of the liquid flowing from the percolator, dissolve the residue in *0.25 M sulfuric acid* and verify the absence of alkaloids using *potassium tetraiodomercurate solution R*. Concentrate the percolate to about 50 mL by distilling on a water-bath and transfer it to a separating funnel, rinsing with *peroxide-free ether R*. Add a quantity of *peroxide-free ether R* equal to at least 2.1 times the volume of the percolate to produce a liquid of a density well below that of water. Shake the solution with no fewer than 3 quantities, each of 20 mL, of *0.25 M sulfuric acid*, separate the 2 layers by centrifugation if necessary and transfer the acid layers to a 2nd separating funnel. Make the acid layer alkaline with *ammonia R* and shake with 3 quantities, each of 30 mL, of *chloroform R*. Combine the chloroform layers, add 4 g of *anhydrous sodium sulfate R* and allow to stand for 30 min with occasional shaking. Decant the chloroform and wash the sodium sulfate with 3 quantities, each of 10 mL, of *chloroform R*. Add the washings to the chloroform extract, evaporate to dryness on a water-bath and heat in an oven at 100-105 °C for 15 min. Dissolve the residue in a few millilitres of *chloroform R*, add 20.0 mL of *0.01 M sulfuric acid* and remove the chloroform by evaporation on a water-bath. Titrate the excess of acid with *0.02 M sodium hydroxide* using *methyl red mixed solution R* as indicator.

Calculate the percentage content of total alkaloids, expressed as hyoscyamine, using the following expression:

$$\frac{57.88 \times (20 - n)}{(100 - d) \times m}$$

d = loss on drying as a percentage;

n = volume of *0.02 M sodium hydroxide* used, in millilitres;

m = mass of the herbal drug used, in grams.

STORAGE

In an airtight container.

01/2008:2158

BENZOIN, SIAM

Benzoe tonkinensis

DEFINITION

Resin obtained by incising the trunk of *Styrax tonkinensis* (Pierre) Craib ex Hartwich.

Content: 45.0 per cent to 55.0 per cent of total acids, calculated as benzoic acid ($C_7H_6O_2$; M_r 122.1) (dried drug).

Herbal drugs

CHARACTERS

Characteristic odour of vanillin.

IDENTIFICATION

A. Siam benzoin occurs as opaque, granular, rounded or ovoid masses (tears), varying in size from a few millimeters up to 3 cm, separated or sometimes agglomerated together by a reddish-brown, transparent resin. Individual tears are yellowish-white to reddish externally with a waxy, whitish fracture which becomes reddish on exposure to air.

B. Examine the chromatograms obtained in test B for *Styrax benzoin*.

Results: see below the sequence of the zones present in the chromatograms obtained with the reference solution and the test solution. Furthermore, other faint fluorescent zones may be present in the chromatogram obtained with the test solution.

Top of the plate	
———	———
Methyl cinnamate: a very prominent quenching zone	
Benzoic acid: a quenching zone	A quenching zone (benzoic acid)
Cinnamic acid: a prominent quenching zone	
———	———
	A quenching zone
	A very prominent quenching zone
Vanillin: a quenching zone	A quenching zone (vanillin)
	Series of unresolved zones including a quenching zone
Reference solution	**Test solution**

TESTS

Styrax benzoin

A. To 0.2 g of the finely powdered herbal drug add 10 mL of *ethanol (96 per cent) R*. Shake vigorously until almost completely dissolved and filter. Place 5 mL of the filtrate in a test-tube and add 0.5 mL of a 50 g/L solution of *ferric chloride R* in *ethanol (96 per cent) R*. A green colour is produced. No yellow colour is produced.

B. Thin-layer chromatography (*2.2.27*).

Test solution. Sonicate 0.2 g of the finely powdered herbal drug in 5 mL of *ethanol (96 per cent) R* and filter. Collect the filtrate.

Reference solution. Dissolve 20 mg of *benzoic acid R*, 10 mg of *trans-cinnamic acid R*, 4 mg of *vanillin R* and 20 mg of *methyl cinnamate R* in 10 mL of *ethanol (96 per cent) R*.

Plate: *TLC silica gel F_{254} plate R*.

Mobile phase: *glacial acetic acid R*, *di-isopropyl ether R*, *hexane R* (10:40:60 *V/V/V*).

Application: 10 µL as bands.

Development: over a path of 12 cm.

Drying: in air.

Detection: examine in ultraviolet light at 254 nm.

Results: the chromatogram obtained with the test solution shows no zone in the same position as the zone due to cinnamic acid in the chromatogram obtained with the reference solution.

Matter insoluble in ethanol: maximum 5 per cent.

To 2 g of the powdered herbal drug add 25 mL of *ethanol (90 per cent V/V) R*. Boil until almost completely dissolved. Filter through a previously tared sintered-glass filter (16) (*2.1.2*) and wash with 3 quantities, each of 5 mL, of boiling *ethanol (90 per cent V/V) R*. Heat the glass filter and its contents in an oven at 100-105 °C for 2 h. Weigh after cooling.

Loss on drying (*2.2.32*): maximum 5.0 per cent, determined on 2.00 g of the coarsely powdered herbal drug by drying *in vacuo* for 4 h.

Total ash (*2.4.16*): maximum 2.0 per cent.

ASSAY

Place 0.750 g of the finely powdered herbal drug in a 250 mL borosilicate glass flask and add 15.0 mL of *0.5 M alcoholic potassium hydroxide*. Boil under a reflux condenser on a water-bath for 30 min. Allow to cool and rinse the condenser with 20 mL of *ethanol (96 per cent) R*. Titrate the excess of potassium hydroxide with *0.5 M hydrochloric acid*. Determine the end-point potentiometrically (*2.2.20*). Carry out a blank titration.

1 mL of *0.5 M alcoholic potassium hydroxide* is equivalent to 61.05 mg of benzoic acid ($C_7H_6O_2$).

01/2008:1814

BENZOIN, SUMATRA

Benzoe sumatranus

DEFINITION

Resin obtained by incising the trunk of *Styrax benzoin* Dryander.

Content: 25.0 per cent to 50.0 per cent of total acids, calculated as benzoic acid ($C_7H_6O_2$; M_r 122.1) (dried drug).

IDENTIFICATION

A. Sumatra benzoin occurs as creamy white, rounded to ovoid tears, which may be embedded in a dull greyish-brown or reddish-brown matrix. It is hard and brittle and the fractured surface is dull and uneven.

B. Examine the chromatograms obtained in test B for *Styrax tonkinensis*.

Results: see below the sequence of quenching zones present in the chromatograms obtained with the reference solution and the test solution. Furthermore, other faint quenching zones may be present in the chromatogram obtained with the test solution.

Top of the plate	
	A very intense dark zone
———	———
Methyl cinnamate: a very intense dark zone	A dark zone
Benzoic acid: a dark zone	A very weak dark zone (benzoic acid)
Cinnamic acid: an intense dark zone	A very intense dark zone (cinnamic acid)
———	———
	A dark zone
	A very intense dark zone
	A dark zone
Vanillin: a dark zone	A very weak dark zone (vanillin)
	Series of unresolved zones including 2 dark zones
Reference solution	**Test solution**

TESTS

Dammar gum. Thin-layer chromatography (*2.2.27*).

Test solution. Dissolve 0.2 g of the drug to be examined with gentle heating in 10 mL of *ethanol (90 per cent V/V) R* and centrifuge.

Plate: *TLC aluminium oxide G plate R*.

Mobile phase: *light petroleum R4*, *ether R* (40:60 *V/V*).

Herbal drugs

Application: 5 µL.

Development: over a path of 10 cm.

Drying: in air.

Detection: spray with *anisaldehyde solution R* and heat at 100-105 °C for 5 min.

Results: the chromatogram obtained does not show any prominent spot with an R_F between 0.4 and 1.0.

Styrax tonkinensis

A. To 0.2 g of the finely powdered herbal drug add 10 mL of *ethanol (96 per cent) R*. Shake vigorously until almost completely dissolved and filter. Place 5 mL of the filtrate in a test-tube and add 0.5 mL of a 50 g/L solution of *ferric chloride R* in *ethanol (96 per cent) R*. A yellowish, slightly green colour is produced.

B. Thin-layer chromatography (*2.2.27*).

Test solution. Sonicate 0.2 g of the finely powdered herbal drug in 5 mL of *ethanol (96 per cent) R* and filter. Collect the filtrate.

Reference solution. Dissolve 20 mg of *benzoic acid R*, 10 mg of *trans-cinnamic acid R*, 4 mg of *vanillin R* and 20 mg of *methyl cinnamate R* in 10 mL of *ethanol (96 per cent) R*.

Plate: *TLC silica gel F_{254} plate R* (5-40 µm) [or *TLC silica gel F_{254} plate R* (2-10 µm)].

Mobile phase: *glacial acetic acid R*, *di-isopropyl ether R*, *hexane R* (10:40:60 *V/V/V*).

Application: 10 µL [or 2 µL] as bands.

Development: over a path of 12 cm [or 5 cm].

Drying: in air.

Detection: examine in ultraviolet light at 254 nm.

Results: the chromatogram obtained with the test solution shows 2 faint zones in the same positions as the dark zones due to benzoic acid and vanillin in the chromatogram obtained with the reference solution.

Matter insoluble in ethanol: maximum 20.0 per cent.

To 2.0 g of the powdered herbal drug add 25 mL of *ethanol (90 per cent V/V) R*. Boil until almost completely dissolved. Filter through a tared sintered-glass filter (16) (*2.1.2*) and wash with 3 quantities, each of 5 mL, of boiling *ethanol (90 per cent V/V) R*. Heat the glass filter and its contents in an oven at 100-105 °C for 2 h. Allow to cool and weigh.

Loss on drying (*2.2.32*): maximum 5.0 per cent, determined on 2.000 g of the coarsely powdered herbal drug by drying *in vacuo* for 4 h.

Total ash (*2.4.16*): maximum 2.0 per cent.

ASSAY

Place 0.750 g of the finely powdered herbal drug in a 250 mL borosilicate glass flask and add 15.0 mL of *0.5 M alcoholic potassium hydroxide*. Boil under a reflux condenser on a water-bath for 30 min. Allow to cool and rinse the condenser with 20 mL of *ethanol (96 per cent) R*. Titrate the excess of potassium hydroxide with *0.5 M hydrochloric acid*, determining the end-point potentiometrically (*2.2.20*). Carry out a blank titration.

1 mL of *0.5 M alcoholic potassium hydroxide* is equivalent to 61.05 mg of benzoic acid ($C_7H_6O_2$).

01/2008:2157

BENZOIN TINCTURE, SIAM

Benzois tonkinensis tinctura

DEFINITION

Tincture produced from *Siam benzoin (2158)*.

Content: minimum 5.0 per cent *m/m* of total acids, calculated as benzoic acid ($C_7H_6O_2$; M_r 122.1).

PRODUCTION

The tincture is produced from 1 part of the drug and 5 parts of ethanol (75 per cent *V/V* to 96 per cent *V/V*) by a suitable procedure.

CHARACTERS

Appearance: orange-yellow liquid.

It has a characteristic odour of vanillin.

IDENTIFICATION

A. Place 10 mL in a test tube; add 0.5 mL of a 50 g/L solution of *ferric chloride R* in *ethanol (96 per cent) R*. A green colour is produced.

B. Examine the chromatograms obtained in the test for Sumatra benzoin tincture.

Results: see below the sequence of the zones present in the chromatograms obtained with the reference solution and the test solution. Furthermore, other faint fluorescent zones may be present in the chromatogram obtained with the test solution.

Top of the plate	
———	———
Methyl cinnamate: a very prominent quenching zone	
Benzoic acid: a quenching zone	A quenching zone (benzoic acid)
Cinnamic acid: a prominent quenching zone	
———	———
	A quenching zone
	A very prominent quenching zone
Vanillin: a quenching zone	A quenching zone (vanillin)
	Series of unresolved zones including a quenching zone
Reference solution	**Test solution**

TESTS

Sumatra benzoin tincture. Thin-layer chromatography (*2.2.27*).

Test solution. The tincture to be examined.

Reference solution. Dissolve 20 mg of *benzoic acid R*, 10 mg of *trans-cinnamic acid R*, 4 mg of *vanillin R* and 20 mg of *methyl cinnamate R* in 20 mL of ethanol of the same concentration as that used for the production of the tincture.

Plate: *TLC silica gel F_{254} plate R* (5-40 µm) [or *TLC silica gel F_{254} plate R* (2-10 µm)].

Mobile phase: *glacial acetic acid R*, *di-isopropyl ether R*, *hexane R* (10:40:60 *V/V/V*).

Application: 20 µL [or 8 µL] as bands.

Development: over a path of 12 cm [or 6 cm].

Drying: in air.

Detection: examine in ultraviolet light at 254 nm.

Results: the chromatogram obtained with the test solution does not show any zone in the same position as the zones due to cinnamic acid and methyl cinnamate in the chromatogram obtained with the reference solution.

Ethanol (*2.9.10*): 95 per cent to 105 per cent of the content stated on the label.

ASSAY

Place 3.50 g in a 250 mL borosilicate glass flask and add 15.0 mL of *0.5 M alcoholic potassium hydroxide*. Boil under a reflux condenser on a water-bath for 30 min. Allow to cool and rinse the condenser with 20 mL of *ethanol (96 per cent) R*. Titrate the excess of potassium hydroxide with *1 M hydrochloric acid*, determining the end-point potentiometrically (*2.2.20*). Carry out a blank titration.

1 mL of *0.5 M alcoholic potassium hydroxide* is equivalent to 61.05 mg of benzoic acid ($C_7H_6O_2$).

01/2008:1813

BENZOIN TINCTURE, SUMATRA

Benzois sumatrani tinctura

DEFINITION

Tincture produced from *Sumatra benzoin (1814)*.

Content: minimum 4.0 per cent *m/m* of total acids, calculated as benzoic acid ($C_7H_6O_2$; M_r 122.1).

PRODUCTION

The tincture is produced from 1 part of the drug and 5 parts of ethanol (75 per cent *V/V* to 96 per cent *V/V*) by a suitable procedure.

CHARACTERS

Appearance: orange-yellow liquid.

IDENTIFICATION

Examine the chromatograms obtained in the test for Siam benzoin tincture.

Results: see below the sequence of quenching zones present in the chromatograms obtained with the reference solution and the test solution. Furthermore, other faint quenching zones may be present in the chromatogram obtained with the test solution.

Top of the plate	
	A very intense dark zone
———	———
Methyl cinnamate: a very intense dark zone	A dark zone
Benzoic acid: a dark zone	A very weak dark zone (benzoic acid)
Cinnamic acid: an intense dark zone	A very intense dark zone (cinnamic acid)
———	———
	A dark zone
	A very intense dark zone
	A dark zone
Vanillin: a dark zone	A very weak dark zone (vanillin)
	Series of unresolved dark zones
Reference solution	**Test solution**

TESTS

Siam benzoin tincture. Thin-layer chromatography (*2.2.27*).

Test solution. The tincture to be examined.

Reference solution. Dissolve 20 mg of *benzoic acid R*, 10 mg of *trans-cinnamic acid R*, 4 mg of *vanillin R* and 20 mg of *methyl cinnamate R* in 20 mL of ethanol of the same concentration as that used for the production of the tincture.

Plate: *TLC silica gel F_{254} plate R* (5-40 µm) [or *TLC silica gel F_{254} plate R* (2-10 µm)].

Mobile phase: *glacial acetic acid R*, *di-isopropyl ether R*, *hexane R* (10:40:60 *V/V/V*).

Application: 20 µL [or 8 µL] as bands.

Development: over a path of 12 cm [or 6 cm].

Drying: in air.

Detection: examine in ultraviolet light at 254 nm.

Results: the chromatogram obtained with the test solution does not show zones due to benzoic acid and vanillin that are more intense than the corresponding zones in the chromatogram obtained with the reference solution.

Ethanol (*2.9.10*): 95 per cent to 105 per cent of the content stated on the label.

ASSAY

Place 3.50 g in a 250 mL borosilicate glass flask and add 15.0 mL of *0.5 M alcoholic potassium hydroxide*. Boil under a reflux condenser on a water-bath for 30 min. Allow to cool and rinse the condenser with 20 mL of *ethanol (96 per cent) R*. Titrate the excess of potassium hydroxide with *1 M hydrochloric acid*, determining the end-point potentiometrically (*2.2.20*). Carry out a blank titration.

1 mL of *0.5 M alcoholic potassium hydroxide* is equivalent to 61.05 mg of benzoic acid ($C_7H_6O_2$).

01/2008:1588
corrected 6.0

BILBERRY FRUIT, DRIED

Myrtilli fructus siccus

DEFINITION

Dried ripe fruit of *Vaccinium myrtillus* L.

Content: minimum 1.0 per cent of tannins, expressed as pyrogallol ($C_6H_6O_3$; M_r 126.1) (dried drug).

CHARACTERS

Sweet and slightly astringent taste.

IDENTIFICATION

A. Dried bilberry is a dark blue, subglobular, shrunken berry about 5 mm in diameter, with a scar at the lower end and surmounted by the persistent calyx, which appears as a circular fold and the remains of the style. The deep violet, fleshy mesocarp contains numerous small, brown, ovoid seeds.

B. Reduce to a powder (355) (*2.9.12*). The powder is violet-brown. Examine under a microscope using *chloral hydrate solution R*. The powder shows: violet-pink sclereids from the endocarp and the mesocarp, usually aggregated, with thick, channelled walls; reddish-brown fragments of the epicarp consisting of polygonal cells with moderately thickened walls; brownish-yellow fragments of the outer seed testa made up of elongated cells with U-shaped thickened walls; clusters and prisms crystals of various size of calcium oxalate.

C. Thin-layer chromatography (*2.2.27*)

Test solution. To 2 g of the powdered herbal drug (355) (*2.9.12*) add 20 mL of *methanol R*. Shake for 15 min and filter.

Reference solution. Dissolve 5 mg of *chrysanthemin R* in 10 mL of *methanol R*.

Plate: *TLC silica gel plate R*.

Mobile phase: *anhydrous formic acid R*, *water R*, *butanol R* (16:19:65 *V/V/V*).

Application: 10 µL, as bands.

Development: over a path of 10 cm.

Drying: in air.

Detection: examine in daylight.

Results: see below the sequence of the zones present in the chromatograms obtained with the reference and test solutions.

Herbal drugs

Top of the plate	
Chrysanthemin: a violet-red zone	A violet-red zone of low intensity A principal violet-red zone A compact set of other principal zones: – a violet-red zone – several violet-blue zones
Reference solution	**Test solution**

TESTS

Loss on drying (*2.2.32*): maximum 12.0 per cent, determined on 1.000 g of the powdered herbal drug by drying in an oven at 105 °C for 2 h.

Total ash (*2.4.16*): maximum 5.0 per cent.

ASSAY

Tannins (*2.8.14*). Use 1.500 g of the powdered herbal drug (355) (*2.9.12*).

01/2008:1602
corrected 6.1

BILBERRY FRUIT, FRESH

Myrtilli fructus recens

DEFINITION

Fresh or frozen, ripe fruit of *Vaccinium myrtillus* L.

Content: minimum 0.30 per cent of anthocyanins, expressed as cyanidin 3-*O*-glucoside chloride (chrysanthemin, $C_{21}H_{21}ClO_{11}$; M_r 484.8) (dried drug).

CHARACTERS

Sweet and slightly astringent taste.

IDENTIFICATION

A. The fresh fruit is a blackish-blue globular berry about 5 mm in diameter. Its lower end shows a scar or, rarely, a fragment of the pedicel. The upper end is flattened and surmounted by the remains of the persistent style and of the calyx, which appears as a circular fold. The violet, fleshy mesocarp includes 4 to 5 locules containing numerous small, brown, ovoid seeds.

B. The crushed fresh fruit is violet-red. Examine under a microscope using *chloral hydrate solution R*. It shows violet-pink sclereids from the endocarp and the mesocarp, usually aggregated, with thick, channelled walls; reddish-brown fragments of the epicarp consisting of polygonal cells with moderately thickened walls; brownish-yellow fragments of the outer layer of the testa composed of elongated cells with U-shaped thickened walls; cluster crystals of calcium oxalate.

C. Thin-layer chromatography (*2.2.27*).

Test solution. To 5 g of the freshly crushed drug, add 20 mL of *methanol R*. Stir for 15 min and filter.

Reference solution. Dissolve 5 mg of *chrysanthemin R* in 10 mL of *methanol R*.

Plate: *TLC silica gel plate R*.

Mobile phase: *anhydrous formic acid R*, *water R*, *butanol R* (16:19:65 *V/V/V*).

Application: 10 µL, as bands.

Development: over a path of 10 cm.

Drying: in air.

Detection: examine in daylight.

Results: see below the sequence of the zones present in the chromatograms obtained with the reference solution and the test solution.

Top of the plate	
Chrysanthemin: a violet-red zone	A violet-red zone A principal violet-red zone A compact set of other principal zones: – a violet-red zone – several violet-blue zones
Reference solution	**Test solution**

TESTS

Total ash (*2.4.16*): maximum 0.6 per cent.

Loss on drying (*2.2.32*): 80.0 per cent to 90.0 per cent, determined on 5.000 g of the freshly crushed drug by drying in an oven at 105 °C.

ASSAY

Crush 50 g extemporaneously. To about 5.00 g of the crushed, accurately weighed drug, add 95 mL of *methanol R*. Stir mechanically for 30 min. Filter into a 100.0 mL volumetric flask. Rinse the filter and dilute to 100.0 mL with *methanol R*. Prepare a 50-fold dilution of this solution in a 0.1 per cent *V/V* solution of *hydrochloric acid R* in *methanol R*.

Measure the absorbance (*2.2.25*) of the solution at 528 nm, using a 0.1 per cent *V/V* solution of *hydrochloric acid R* in *methanol R* as the compensation liquid.

Calculate the percentage content of anthocyanins, expressed as cyanidin 3-*O*-glucoside chloride, using the following expression:

$$\frac{A \times 5000}{718 \times m}$$

718 = specific absorbance of cyanidin 3-*O*-glucoside chloride at 528 nm;

A = absorbance at 528 nm;

m = mass of the substance to be examined in grams.

STORAGE

When frozen, store at or below – 18 °C.

04/2013:1174

BIRCH LEAF

Betulae folium

DEFINITION

Whole or fragmented, dried leaves of *Betula pendula* Roth and/or *Betula pubescens* Ehrh. as well as hybrids of both species.

Content: minimum 1.5 per cent of flavonoids, expressed as hyperoside ($C_{21}H_{20}O_{12}$; M_r 464.4) (dried drug).

IDENTIFICATION

A. The leaves of both species are dark green on the adaxial surface and lighter greenish-grey on the abaxial surface; they show a characteristic dense reticulate venation. The veins are light brown or almost white.

The leaves of *B. pendula* are glabrous and show closely spaced glandular pits on both surfaces. The leaves of *B. pendula* are 3-7 cm long and 2-5 cm wide; the petiole is long and the doubly dentate lamina is triangular or rhomboid and broadly cuneate or truncate at the base. The angle on each side is unrounded or slightly rounded, and the apex is long and acuminate.

The leaves of *B. pubescens* show few glandular trichomes and are slightly pubescent on both surfaces. The abaxial surface shows small bundles of yellowish-grey trichomes at the branch points of the veins. The leaves of *B. pubescens* are slightly smaller, oval or rhomboid and more rounded. They are more roughly and more regularly dentate. The apex is neither long nor acuminate.

B. Microscopic examination (*2.8.23*). The powder is greenish-grey. Examine under a microscope using *chloral hydrate solution R*. The powder shows the following diagnostic characters (Figure 1174.-1): numerous fragments of the lamina, in surface view, with straight-walled, adaxial epidermal cells accompanied by underlying palisade parenchyma [E] and cells of the abaxial epidermis surrounding anomocytic stomata (*2.8.3*) [G]; large, free, glandular trichomes usually measuring 100-120 µm [D]; fragments of the lamina in transverse section [B], showing glandular trichomes on the epidermises [Ba], heterogeneous, asymmetrical mesophyll containing cluster crystals [Bb] and prisms [Bc] of calcium oxalate; fragments of spongy parenchyma [A] accompanied by crystal sheaths [Aa] and cells containing cluster crystals of calcium oxalate [Ab]; fragments of vessels and sclerenchyma fibres [C]. If *B. pubescens* is present, the powder also contains unicellular covering trichomes with very thick walls, about 80-600 µm long, usually 100-200 µm, numerous on the margin of the lamina [F] or on the epidermises, in surface view [H].

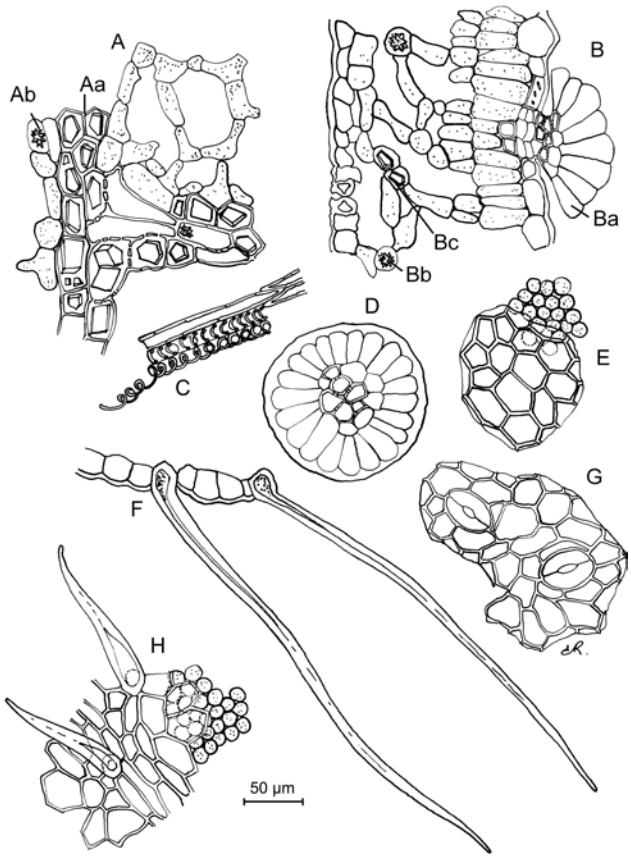

Figure 1174.-1. – *Illustration for identification test B of powdered herbal drug of birch leaf*

C. Thin-layer chromatography (*2.2.27*).

Test solution. To 1 g of the powdered herbal drug (355) (*2.9.12*) add 10 mL of *methanol R* and shake. Heat on a water-bath at 60 °C for 5 min. Cool and filter the solution.

Reference solution. Dissolve 1 mg of *chlorogenic acid R*, 1 mg of *caffeic acid R*, 2.5 mg of *hyperoside R* and 2.5 mg of *rutin R* in 10 mL of *methanol R*.

Plate: *TLC silica gel plate R*.

Mobile phase: *anhydrous formic acid R*, *water R*, *methyl ethyl ketone R*, *ethyl acetate R* (10:10:30:50 *V/V/V/V*).

Application: 10 µL as bands.

Development: over a path of 10 cm.

Drying: in a current of warm air.

Detection: treat with a 10 g/L solution of *diphenylboric acid aminoethyl ester R* in *methanol R*; subsequently treat with a 50 g/L solution of *macrogol 400 R* in *methanol R*; allow to dry in air for 30 min and examine in ultraviolet light at 365 nm.

Results: the chromatogram obtained with the reference solution shows 3 zones in its lower half: in increasing order of R_F, a yellowish-brown fluorescent zone (rutin), a light blue fluorescent zone (chlorogenic acid) and a yellowish-brown fluorescent zone (hyperoside), and in its upper third, a light blue fluorescent zone (caffeic acid). The chromatogram obtained with the test solution shows 3 zones similar in position and fluorescence to the zones due to rutin, chlorogenic acid and hyperoside in the chromatogram obtained with the reference solution. The zone due to rutin is very faint and the zone due to hyperoside is intense. It also shows other yellowish-brown faint fluorescent zones between the zones due to caffeic acid and chlorogenic acid in the chromatogram obtained with the reference solution. Near the solvent front, the red fluorescent zone due to chlorophylls is visible. In the chromatogram obtained with the test solution, between this zone and the zone due to caffeic acid in the chromatogram obtained with the reference solution, there is a brownish-yellow zone due to quercetin.

TESTS

Foreign matter (*2.8.2*): maximum 3 per cent of fragments of female catkins and maximum 3 per cent of other foreign matter.

Loss on drying (*2.2.32*): maximum 10.0 per cent, determined on 1.000 g of the powdered herbal drug (355) (*2.9.12*) by drying in an oven at 105 °C for 2 h.

Total ash (*2.4.16*): maximum 6.0 per cent.

ASSAY

Stock solution. In a 100 mL round-bottomed flask introduce 0.200 g of the powdered herbal drug (355) (*2.9.12*), 1 mL of a 5 g/L solution of *hexamethylenetetramine R*, 20 mL of *acetone R* and 2 mL of *hydrochloric acid R1*. Boil the mixture under a reflux condenser for 30 min. Filter the liquid through a plug of absorbent cotton into a 100 mL flask. Add the absorbent cotton to the residue in the round-bottomed flask and extract with 2 quantities, each of 20 mL, of *acetone R*, each time boiling under a reflux condenser for 10 min. Allow to cool to room temperature, filter the liquid through a plug of absorbent cotton then through a filter paper into the volumetric flask, and dilute to 100.0 mL with *acetone R* by rinsing the flask and filter. Introduce 20.0 mL of the solution into a separating funnel, add 20 mL of *water R* and extract the mixture with 1 quantity of 15 mL and then 3 quantities, each of 10 mL, of *ethyl acetate R*. Combine the ethyl acetate extracts in a separating funnel, wash with 2 quantities, each of 50 mL, of *water R*, and filter the extract over 10 g of *anhydrous sodium sulfate R* into a 50 mL volumetric flask and dilute to 50.0 mL with *ethyl acetate R*.

Test solution. To 10.0 mL of the stock solution add 1 mL of *aluminium chloride reagent R* and dilute to 25.0 mL with a 5 per cent *V/V* solution of *glacial acetic acid R* in *methanol R*.

Compensation liquid. Dilute 10.0 mL of the stock solution to 25.0 mL with a 5 per cent *V/V* solution of *glacial acetic acid R* in *methanol R*.

Measure the absorbance (*2.2.25*) of the test solution after 30 min, by comparison with the compensation liquid at 425 nm.

Calculate the percentage content of flavonoids, expressed as hyperoside, using the following expression:

$$\frac{A \times 1.25}{m}$$

i.e. taking the specific absorbance of hyperoside to be 500.

A = absorbance at 425 nm;

m = mass of the herbal drug to be examined, in grams.

01/2014:2384

BISTORT RHIZOME

Bistortae rhizoma

DEFINITION

Whole or fragmented, dried rhizome of *Persicaria bistorta* (L.) Samp. (syn. *Polygonum bistorta* L.) without adventitious roots.

Content: minimum 3.0 per cent of tannins, expressed as pyrogallol ($C_6H_6O_3$; M_r 126.1) (dried drug).

CHARACTERS

The whole rhizome is up to 13 cm long and 2.5 cm in diameter. The remnants of the roots are not longer than 1 cm and are about 1 mm in diameter.

IDENTIFICATION

A. The whole rhizome, reddish-brown or blackish-brown, is thick, twisted, and turned back on itself. Its outer surface shows transverse striations and blackish spots. It is flattened and somewhat depressed on the upper surface, convex on the lower surface. It shows adventitious root scars on the surface. The fracture, pinkish-beige, shows an elliptical zone of whitish pits corresponding to the vessels. The drug may also be obtained as more or less cylindrical fragments about 0.3 cm in diameter and up to 1 cm long, with a reddish-brown outer surface, marked by adventitious root scars and a pinkish-beige fracture.

B. Microscopic examination (*2.8.23*). The powder is reddish-brown. Examine under a microscope using *chloral hydrate solution R*. The powder shows the following diagnostic characters (Figure 2384.-1): very numerous cluster crystals of calcium oxalate, 15-65 µm in diameter, either free [G] or included in parenchyma cells [Da]; rare cork fragments in side view [B] or in surface view [H]; vascular bundles in longitudinal section [E] or in transverse section [J] including small pitted vessels [Ea, Ja] accompanied by finely pitted, thick-walled fibres [Eb, Jb]; free fragments of vessels [C]; free fibres [F]; fragments of parenchyma [D] with rounded cells with slightly thickened walls; fragments of collenchyma [K]. Examine under a microscope using a 50 per cent *V/V* solution of *glycerol R*. The powder shows rounded or ovoid starch granules, simple, about 5-12 µm in diameter, free or included in parenchyma cells [A].

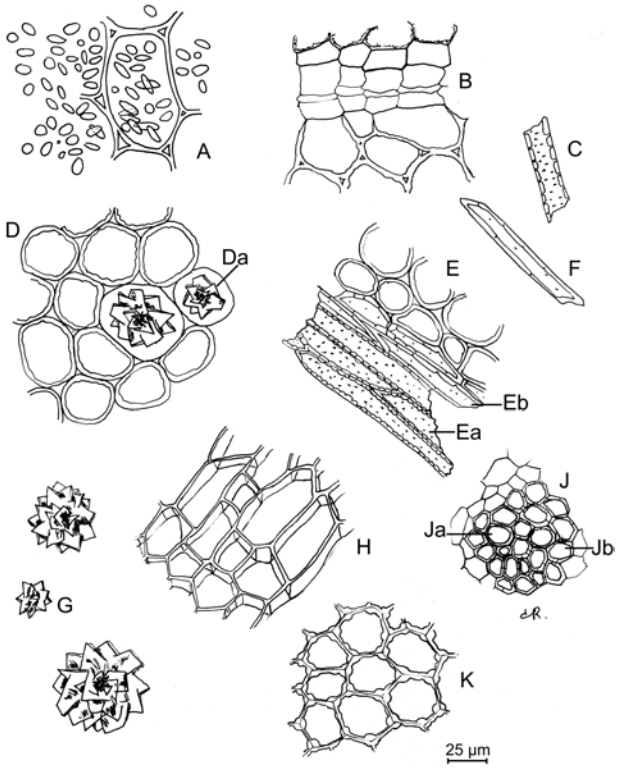

Figure 2384.-1. – *Illustration for identification test B of powdered herbal drug of bistort rhizome*

C. Thin-layer chromatography (*2.2.27*).

Test solution. To 1.0 g of the powdered herbal drug (355) (*2.9.12*) add 10 mL of a mixture of equal volumes of *methanol R* and *water R*, heat on a water-bath at about 65 °C for 30 min and filter.

Reference solution. Dissolve 5 mg of *fructose R* and 5 mg of *catechin R* in 5 mL of *methanol R*.

Plate: *TLC silica gel plate R* (2-10 µm).

Mobile phase: *water R*, *anhydrous formic acid R*, *ethyl acetate R* (5:10:85 *V/V/V*).

Application: 2 µL as bands.

Development: over a path of 7 cm.

Drying: in air.

Detection: treat with *anisaldehyde solution R* and heat at 100-105 °C for 5 min; examine in daylight.

Results: see below the sequence of zones present in the chromatograms obtained with the reference solution and the test solution. Furthermore, other faint zones may be present in the chromatogram obtained with the test solution.

Top of the plate	
Catechin: a brown zone	A brown zone (catechin)
	A brown zone
	A violet zone
	A brown zone
	An orange zone
Fructose: a green zone	A green zone (fructose)
Reference solution	**Test solution**

Herbal drugs

TESTS

***Paris polyphylla* Sm. or *Paris quadrifolia* L.** Microscopic examination (*2.8.23*). Examine under a microscope using *chloral hydrate solution R*. The presence of raphides of calcium oxalate, free or in bundles, indicates adulteration by the rhizome of *P. polyphylla* Sm. var. *yunnanensis* (Franch.) Hand.-Mazz. or *P. polyphylla* Sm. var. *chinensis* (Franch.) H.Hara or *P. quadrifolia* L.

Loss on drying (*2.2.32*): maximum 12.0 per cent, determined on 1.000 g of the powdered herbal drug (355) (*2.9.12*) by drying in an oven at 105 °C.

Total ash (*2.4.16*): maximum 9.0 per cent.

Ash insoluble in hydrochloric acid (*2.8.1*): maximum 1.0 per cent.

ASSAY

Tannins (*2.8.14*). Use 1.000 g of the powdered herbal drug (180) (*2.9.12*).

01/2008:1826

BITTER-FENNEL FRUIT OIL

Foeniculi amari fructus aetheroleum

DEFINITION

Essential oil obtained by steam distillation from the ripe fruits of *Foeniculum vulgare* Miller, ssp. *vulgare* var. *vulgare*.

Content:

- fenchone: 12.0 per cent to 25.0 per cent,
- *trans*-anethole: 55.0 per cent to 75.0 per cent.

CHARACTERS

Appearance: clear, colourless or pale yellow liquid.

Characteristic odour.

IDENTIFICATION

First identification: B.

Second identification: A.

A. Thin-layer chromatography (*2.2.27*).

Test solution. Dissolve 0.1 mL of the essential oil to be examined in 5 mL of *toluene R*.

Reference solution. Dissolve 10 µL of *fenchone R* and 80 µL of *anethole R* in 5 mL of *toluene R*.

Plate: *TLC silica gel plate R*.

Mobile phase: *ethyl acetate R*, *toluene R* (5:95 *V/V*).

Application: 10 µL as bands.

Development: over a path of 15 cm.

Drying: in air.

Detection: spray with a freshly prepared 200 g/L solution of *phosphomolybdic acid R* in *ethanol (96 per cent) R* and heat at 150 °C for 15 min; examine in daylight.

Results: see below the sequence of the zones present in the chromatograms obtained with the reference solution and the test solution. Furthermore, other zones may be present in the chromatogram obtained with the test solution.

Top of the plate	
Anethole: a dark blue to dark violet zone	A dark blue to dark violet zone (anethole)
Fenchone: a blue or bluish-grey zone	A blue or bluish-grey zone (fenchone)
Reference solution	**Test solution**

B. Examine the chromatograms obtained in the test for chromatographic profile.

Results: the characteristic peaks in the chromatogram obtained with the test solution are similar in retention time to those in the chromatogram obtained with the reference solution.

TESTS

Relative density (*2.2.5*): 0.961 to 0.975.

Refractive index (*2.2.6*): 1.528 to 1.539.

Optical rotation (*2.2.7*): + 10.0° to + 24.0°.

Chromatographic profile. Gas chromatography (*2.2.28*): use the normalisation procedure.

Test solution. Dissolve 0.20 mL of the essential oil to be examined in *heptane R* and dilute to 10.0 mL with the same solvent.

Reference solution. Dissolve 20 µL of *α-pinene R*, 20 µL of *limonene R*, 50 µL of *fenchone R*, 20 µL of *estragole R*, 100 µL of *anethole R* and 20 µL of *anisaldehyde R* in *heptane R* and dilute to 10.0 mL with the same solvent.

Column:

- *material*: fused silica,
- *size*: *l* = 60 m, Ø = 0.25 mm,
- *stationary phase*: *macrogol 20 000 R* (film thickness 0.25 µm).

Carrier gas: *helium for chromatography R*.

Flow rate: 1 mL/min.

Split ratio: 1:200.

Temperature:

	Time (min)	Temperature (°C)
Column	0 – 4	60
	4 – 26	60 → 170
	26 – 41	170
Injection port		220
Detector		270

Detection: flame ionisation.

Injection: 1.0 µL.

Elution order: order indicated in the composition of the reference solution. Record the retention times of these substances.

System suitability: reference solution:

- *resolution*: minimum 5.0 between the peaks due to estragole and *trans*-anethole.

Using the retention times determined from the chromatogram obtained with the reference solution, locate the components of the reference solution on the chromatogram obtained with the test solution and locate *cis*-anethole using Figure 1826.-1. (Disregard the peak due to heptane).

Determine the percentage content of each of these components. The percentages are within the following ranges:

- *α-pinene*: 1.0 per cent to 10.0 per cent,
- *limonene*: 0.9 per cent to 5.0 per cent,
- *fenchone*: 12.0 per cent to 25.0 per cent,
- *estragole*: maximum 6.0 per cent,
- *cis-anethole*: maximum 0.5 per cent,
- *trans-anethole*: 55.0 per cent to 75.0 per cent,
- *anisaldehyde*: maximum 2.0 per cent.

The ratio of α-pinene content to limonene content is greater than 1.0.

STORAGE

At a temperature not exceeding 25 °C.

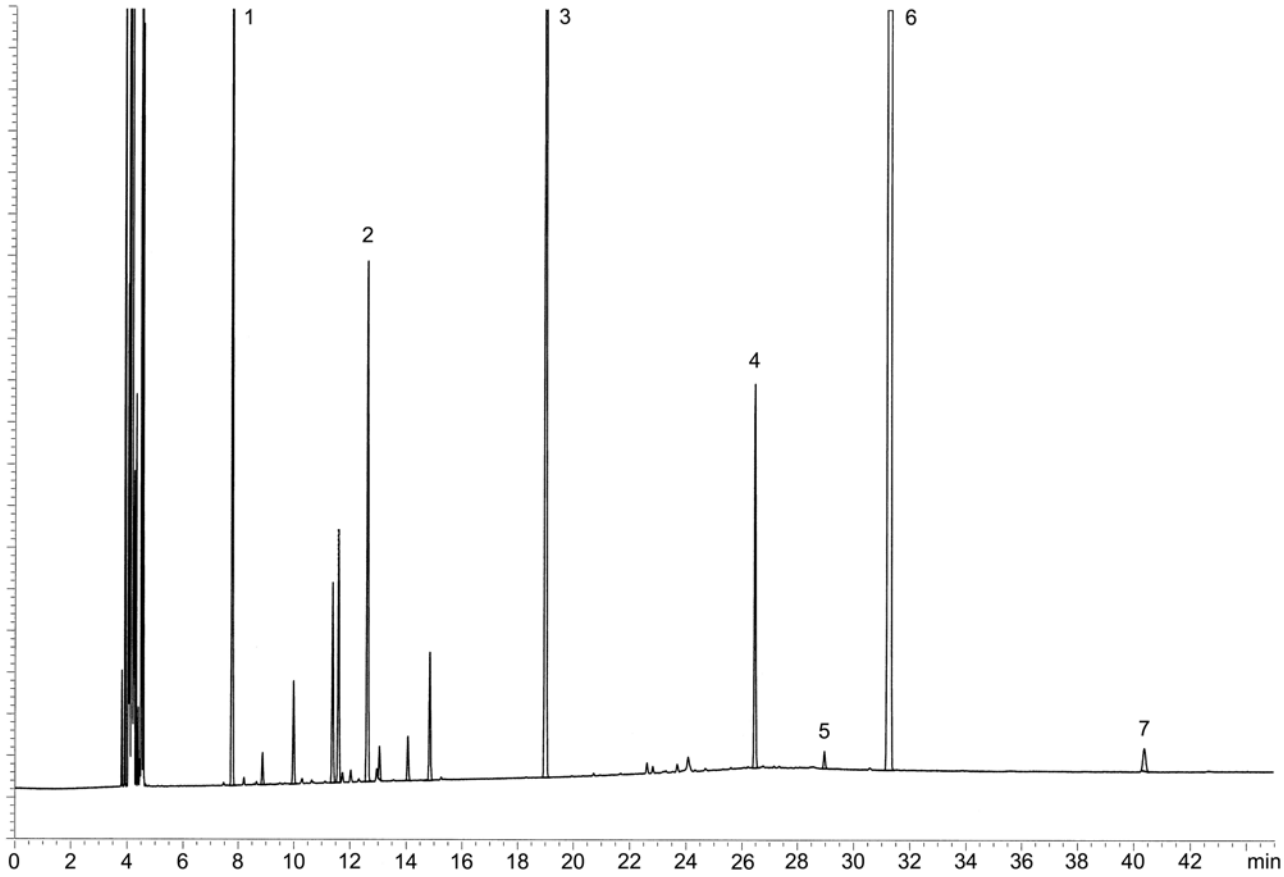

1. α-pinene 3. fenchone 5. *cis*-anethole 7. anisaldehyde
2. limonene 4. estragole 6. *trans*-anethole

Figure 1826.-1. – *Chromatogram for the test for chromatographic profile of bitter-fennel fruit oil*

07/2009:2380
corrected 7.0

BITTER-FENNEL HERB OIL

Foeniculi amari herbae aetheroleum

DEFINITION

Essential oil obtained by steam distillation of the aerial parts of *Foeniculum vulgare* Mill. ssp. *vulgare*, var. *vulgare* collected during fruiting.

CHARACTERS

Appearance: clear, pale or intense yellow liquid.

Anise-like odour.

IDENTIFICATION

First identification: B.

Second identification: A.

A. Thin-layer chromatography (*2.2.27*).

Test solution. Dissolve 0.1 mL of the oil to be examined in 5 mL of *toluene R*.

Reference solution. Dissolve 10 µL of *fenchone R* and 40 µL of *anethole R* in 5 mL of *toluene R*.

Plate: *TLC silica gel plate R* (5-40 µm) [or *TLC silica gel plate R* (2-10 µm)].

Mobile phase: *ethyl acetate R*, *toluene R* (5:95 *V/V*).

Application: 10 µL [or 3 µL] as bands of 10 mm [or 8 mm].

Development: over a path of 8 cm [or 6 cm].

Drying: in air.

Detection: spray with a freshly prepared 200 g/L solution of *phosphomolybdic acid R* in *ethanol (96 per cent) R* and heat at 150 °C for 15 min; examine in daylight.

Results: see below the sequence of zones present in the chromatograms obtained with the reference solution and the test solution. Furthermore, other faint zones may be present in the chromatogram obtained with the test solution.

Top of the plate	
Anethole: a dark blue or dark violet zone	A dark blue or dark violet zone (anethole)
Fenchone: a blue or bluish-grey zone	A sometimes faint blue or bluish-grey zone (fenchone)
Reference solution	**Test solution**

B. Examine the chromatograms obtained in the test for chromatographic profile.

Results:

- *Spanish type*: the characteristic peaks due to α-pinene, β-pinene, β-myrcene, α-phellandrene, limonene, fenchone, estragole and *trans*-anethole in the chromatogram obtained with the test solution are similar in retention time to those in the chromatogram obtained with reference solution (a);
- *Tasmanian type*: the characteristic peaks due to α-pinene, α-phellandrene, limonene, fenchone, estragole and *trans*-anethole in the chromatogram obtained with the test solution are similar in retention time to those in the chromatogram obtained with reference solution (a).

Herbal drugs

TESTS

Relative density (*2.2.5*):
- *Spanish type*: 0.877 to 0.921;
- *Tasmanian type*: 0.940 to 0.973.

Refractive index (*2.2.6*):
- *Spanish type*: 1.487 to 1.501;
- *Tasmanian type*: 1.512 to 1.538.

Optical rotation (*2.2.7*):
- *Spanish type*: + 42° to + 68°;
- *Tasmanian type*: + 11° to + 35°.

Solubility in alcohol (*2.8.10*):
- *Spanish type*: 1 volume is soluble in 2 volumes and more of *ethanol (90 per cent V/V) R*;
- *Tasmanian type*: 1 volume is soluble in 10 volumes and more of *ethanol (85 per cent V/V) R*.

Chromatographic profile. Gas chromatography (*2.2.28*): use the normalisation procedure.

Test solution. Dissolve 0.20 mL of the oil to be examined in *acetone R* and dilute to 10.0 mL with the same solvent.

Reference solution (a). Dissolve 20 µL of *α-pinene R*, 10 µL of *β-pinene R*, 20 µL of *β-myrcene R*, 20 µL of *α-phellandrene R*, 20 µL of *limonene R*, 40 µL of *fenchone R*, 10 µL of *estragole R*, 40 µL of *anethole R*, 10 µL of *anisaldehyde R* and 10 µL of *anise ketone R* in *acetone R* and dilute to 10.0 mL with the same solvent.

Reference solution (b). Dissolve 5 µL of *anethole R* in 25.0 mL of *acetone R*. Dilute 0.5 mL of this solution to 20.0 mL with *acetone R*.

Column:
- *material*: fused silica;
- *size*: *l* = 60 m, Ø = 0.25 mm;
- *stationary phase*: *macrogol 20 000 R* (film thickness 0.25 µm).

Carrier gas: *helium for chromatography R*.

Flow rate: 1 mL/min.

Split ratio: 1:50.

Temperature:

	Time (min)	Temperature (°C)
Column	0 - 35	70 → 210
	35 - 42	210
Injection port		250
Detector		270

Detection: flame ionisation.

Injection: 1 µL.

Elution order: order indicated in the composition of the reference solution; record the retention times of these substances.

System suitability: reference solution (a):
- *resolution*: minimum 1.5 between the peaks due to β-myrcene and α-phellandrene.

Using the chromatogram obtained with the reference solution, locate the relevant components for the type of the essential oil to be examined in the chromatogram obtained with the test solution, and locate *cis*-anethole using Figures 2380.-1 and 2380.-2.

Determine the percentage content of each of these components.

For Spanish-type bitter-fennel herb oil, the percentages are within the following ranges:
- *α-pinene*: 2.0 to 8.0 per cent;
- *β-pinene*: 1.0 to 4.0 per cent;
- *β-myrcene*: 1.0 to 12.0 per cent;
- *α-phellandrene*: 1.0 to 25.0 per cent;
- *limonene*: 8.0 to 30.0 per cent;
- *fenchone*: 7.0 to 16.0 per cent;
- *estragole*: 2.0 to 7.0 per cent;
- *cis-anethole*: maximum 0.5 per cent;
- *trans-anethole*: 15.0 to 40.0 per cent;

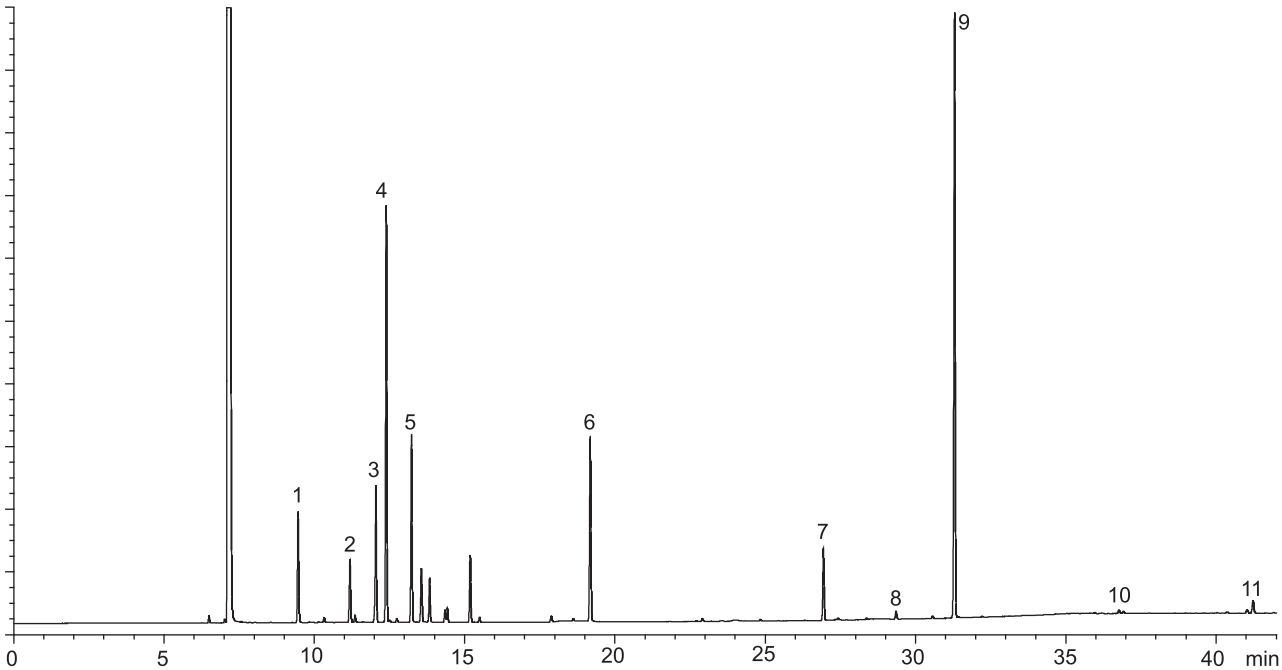

1. α-pinene
2. β-pinene
3. β-myrcene
4. α-phellandrene
5. limonene
6. fenchone
7. estragole
8. *cis*-anethole
9. *trans*-anethole
10. anisaldehyde
11. anise ketone

Figure 2380.-1. – *Chromatogram for the test for chromatographic profile of Spanish-type bitter-fennel herb oil*

Herbal drugs

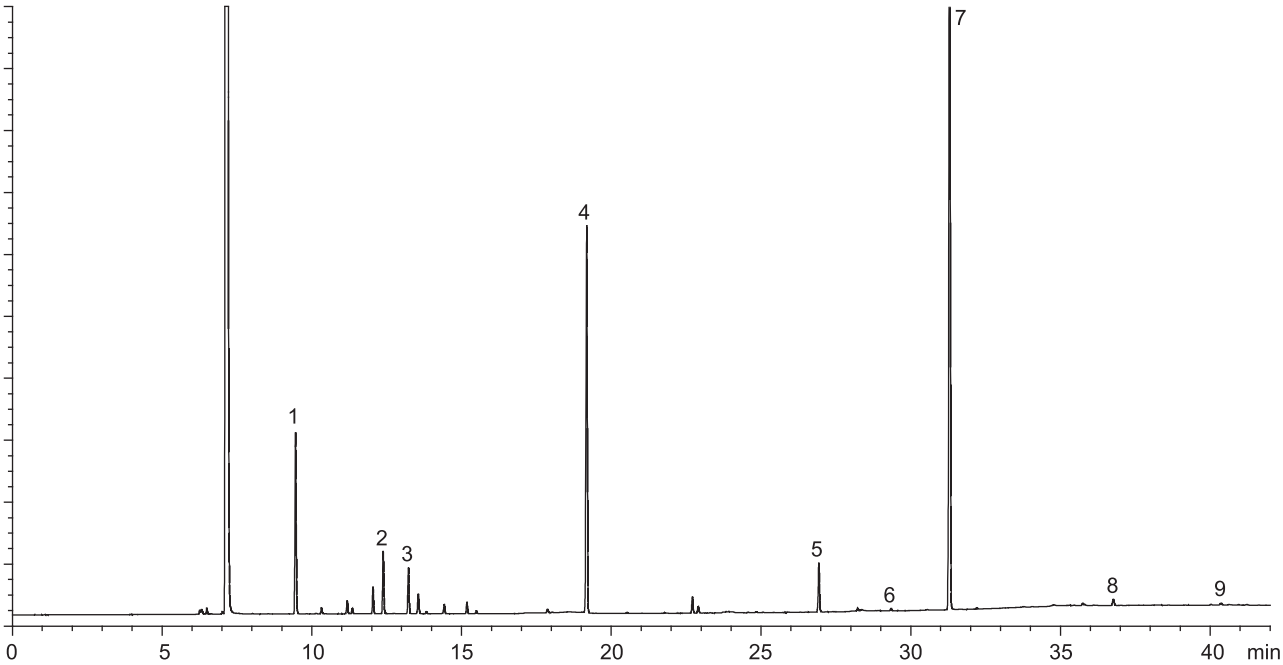

1. α-pinene
2. α-phellandrene
3. limonene
4. fenchone
5. estragole
6. *cis*-anethole
7. *trans*-anethole
8. anisaldehyde
9. anise ketone

Figure 2380.-2. – *Chromatogram for the test for chromatographic profile of Tasmanian-type bitter-fennel herb oil*

- *anisaldehyde*: maximum 1.0 per cent;
- *anise ketone*: maximum 0.05 per cent;
- *disregard limit*: the area of the principal peak in the chromatogram obtained with reference solution (b) (0.025 per cent).

For Tasmanian-type bitter-fennel herb oil, the percentages are within the following ranges:

- *α-pinene*: 2.0 to 11.0 per cent;
- *α-phellandrene*: 1.0 to 8.5 per cent;
- *limonene*: 1.0 to 6.0 per cent;
- *fenchone*: 10.0 to 25.0 per cent;
- *estragole*: 1.5 to 6.0 per cent;
- *cis-anethole*: maximum 0.5 per cent;
- *trans-anethole*: 45.0 to 78.0 per cent;
- *anisaldehyde*: maximum 1.0 per cent;
- *anise ketone*: maximum 0.05 per cent;
- *disregard limit*: the area of the principal peak in the chromatogram obtained with reference solution (b) (0.025 per cent).

STORAGE

At a temperature not exceeding 25 °C.

LABELLING

The label states that the content is Spanish-type or Tasmanian-type.

01/2009:1603

BITTER-ORANGE EPICARP AND MESOCARP

Aurantii amari epicarpium et mesocarpium

DEFINITION

Dried epicarp and mesocarp of the ripe fruit of *Citrus aurantium* L. ssp. *aurantium* (*C. aurantium* L. ssp. *amara* Engl.) partly freed from the white spongy tissue of the mesocarp and endocarp.

Content: minimum 20 mL/kg of essential oil (anhydrous drug).

CHARACTERS

Aromatic odour and spicy bitter taste.

IDENTIFICATION

A. The drug consists of elliptical or irregular pieces 5-8 cm long, 3-5 cm broad and about 3 mm thick. The outer surface is yellowish or reddish-brown and distinctly punctate, the inner surface is yellowish or brownish-white.

B. Reduce to a powder (355) (*2.9.12*). The powder is light brown. Examine under a microscope using *chloral hydrate solution R*. The powder shows the following diagnostic characters: small polygonal cells with slightly thickened anticlinal walls, filled with orange-red chromatophores, and very occasional anomocytic stomata (*2.8.3*); fragments of the hypodermis showing collenchymatous thickening; groups of parenchyma with each cell containing a prism crystal of calcium oxalate; fragments of lysigenous oil glands; parenchyma containing crystals of hesperidin which dissolve in a 20 g/L *potassium hydroxide R* solution giving a yellow colour.

Herbal drugs

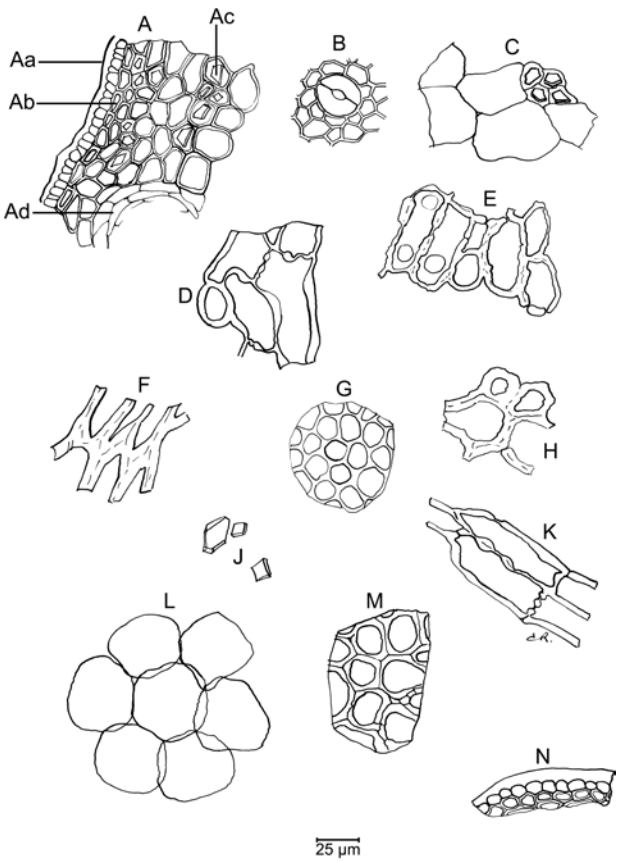

A. Fragment in transverse section showing epicarp with thick cuticule (Aa), collenchymatous hypodermis (Ab) and part of the mesocarp parenchyma containing prism crystals (Ac) of calcium oxalate and fragment of an oil gland (Ad)

B. Fragment of epicarp with anomocytic stoma, in surface view

C. Group of cells of the mesocarp, some containing calcium oxalate crystals

D, E, F, H, K and M. Fragments of mesocarp

G. Sub-epicarpal collenchymatous cells

J. Prism crystals of calcium oxalate

L. Group of parenchymatous cells

N. Fragment of epicarp with thick cuticle and hypodermis showing collenchymatous thickening, in transverse section

Figure 1603.-1. – *Illustration of powdered herbal drug of bitter-orange epicarp and mesocarp (see Identification B)*

C. Thin-layer chromatography (*2.2.27*).

Test solution. To 1.0 g of the powdered herbal drug (710) (*2.9.12*) add 10 mL of *methanol R* and heat in a water-bath at 65 °C for 5 min shaking frequently. Allow to cool and filter.

Reference solution. Dissolve 1.0 mg of *naringin R* and 1.0 mg of *caffeic acid R* in 1 mL of *methanol R*.

Plate: *TLC silica gel plate R*.

Mobile phase: *water R*, *anhydrous formic acid R*, *ethyl acetate R* (10:15:75 *V/V/V*).

Application: 20 µL as bands.

Development: over a path of 10 cm.

Drying: in air, and heat in an oven at 110-120 °C for 5 min.

Detection: spray the warm plate with a 10 g/L solution of *diphenylboric acid aminoethyl ester R* in *methanol R* and then with a 50 g/L solution of *macrogol 400 R* in *methanol R*. After at least 1 h, examine in ultraviolet light at 365 nm.

Results: see below the sequence of zones present in the chromatograms obtained with the reference and test solutions. Furthermore, other fluorescent zones are present in the chromatogram obtained with the test solution.

Top of the plate	
	A light blue fluorescent zone
	A light blue fluorescent zone
Caffeic acid: a light blue fluorescent zone	
	A light blue fluorescent zone
	A light blue fluorescent zone
Naringin: a dark green fluorescent zone	A dark green fluorescent zone (naringin)
	A red fluorescent zone (neoeriocitrin)
	An orange fluorescent zone
Reference solution	**Test solution**

TESTS

Water (*2.2.13*): maximum 10.0 per cent, determined by distillation on 20.0 g of the powdered herbal drug (355) (*2.9.12*).

Total ash (*2.4.16*): maximum 7.0 per cent

Extractable matter: minimum 6.0 per cent.

To 2.000 g of the powdered herbal drug (250) (*2.9.12*) add a mixture of 3 mL of *water R* and 7 mL of *ethanol (96 per cent) R* and extract for 2 h, shaking frequently. Filter, evaporate 2.000 g of the filtrate to dryness on a water-bath and dry in an oven at 100-105 °C for 3 h. Allow to cool in a desiccator over *diphosphorus pentoxide R* and weigh. The residue weighs a minimum of 120 mg.

ASSAY

Essential oil (*2.8.12*). Use a 500 mL round-bottomed flask, 200 mL of *water R* as the distillation liquid and 0.5 mL of *xylene R* in the graduated tube. Reduce the drug to a powder (710) (*2.9.12*) and immediately use 15.0 g for the determination. Distil at a rate of 2-3 mL/min for 90 min.

01/2008:1604

BITTER-ORANGE-EPICARP AND MESOCARP TINCTURE

Aurantii amari epicarpii et mesocarpii tinctura

DEFINITION

Tincture produced from *Bitter-orange epicarp and mesocarp (1603)*.

PRODUCTION

The tincture is produced from 1 part of the freshly powdered herbal drug (2000) (*2.9.12*) and 5 parts of alcohol (70 per cent *V/V*) by an appropriate procedure.

CHARACTERS

Liquid with a bitter taste.

IDENTIFICATION

Examine by thin-layer chromatography (*2.2.27*).

Test solution. The tincture to be examined.

Reference solution. Dissolve 1.0 mg of *naringin R* and 1.0 mg of *caffeic acid R* in 1 mL of *methanol R*.

Plate: *TLC silica gel plate R*.

Mobile phase: *water R*, *anhydrous formic acid R*, *ethyl acetate R* (10:15:75 *V/V/V*).

Application: 20 µL, as bands.

Development: over a path of 10 cm.

Drying: in air, and heat in an oven at 110-120 °C for 5 min.

Detection: spray the warm plate with a 10 g/L solution of *diphenylboric acid aminoethyl ester R* in *methanol R* and then with a 50 g/L solution of *macrogol 400 R* in *methanol R*. After 1 h, examine in ultraviolet light at 365 nm.

Results: see below the sequence of the zones present in the chromatograms obtained with the reference and test solutions. Furthermore, other zones are present in the chromatogram obtained with the test solution.

Top of the plate	
	A light blue fluorescent zone
	A light blue fluorescent zone
Caffeic acid: a light blue fluorescent zone	
	A light blue fluorescent zone
	A light blue fluorescent zone
Naringin: a dark green fluorescent zone	A dark green fluorescent zone (naringin) A red fluorescent zone (neoeriocitrin) An orange fluorescent zone
Reference solution	**Test solution**

TESTS

Ethanol content (*2.9.10*): 63 per cent to 67 per cent *V/V*.

Methanol and 2-propanol (*2.9.11*): maximum 0.05 per cent *V/V* of methanol and maximum 0.05 per cent *V/V* of 2-propanol.

Dry residue: minimum 6.0 per cent *m/m*, determined on 2.00 g of tincture to be examined.

01/2012:1810

BITTER-ORANGE FLOWER

Aurantii amari flos

DEFINITION

Whole, dried, unopened flower of *Citrus aurantium* L. ssp. *aurantium* (*C. aurantium* L. ssp. *amara* Engl.).

Content: minimum 8.0 per cent of total flavonoids, expressed as naringin ($C_{27}H_{32}O_{14}$; M_r 580.5) (dried drug).

IDENTIFICATION

A. The flower buds are white or yellowish-white and may reach up to 25 mm in length. The dialypetalous corolla is composed of 5 thick, oblong and concave petals dotted with oil glands visible under a hand lens; the short, yellowish-green persistent gamosepalous calyx has 5 spreading sepals, connate at the base and forming a star-shaped structure attached to the yellowish-green peduncle, which is about 5-10 mm long. The flower buds contain at least 20 stamens with yellow anthers and with filaments fused at the base into groups of 4 or 5; the ovary is superior, brownish-black and spherical, consists of 8-10 multi-ovular loculi and is surrounded at the base by an annular granular hypogynous disc; the thick, cylindrical style ends in a capitate stigma.

B. Microscopic examination (*2.8.23*). The powder is brownish-yellow. Examine under a microscope using *chloral hydrate solution R*. The powder shows the following diagnostic characters (Figure 1810.-1): very numerous spherical pollen grains, with a finely pitted exine and 3-5 germinal pores [H, K]; fragments of the epidermis of the sepals in surface view [D] and in transverse section [A, C], accompanied by underlying mesophyll [B], some cells of which contain prisms of calcium oxalate [Aa, Ba, Db], unicellular covering trichomes [Ca] and numerous anomocytic stomata (*2.8.3*) [Da]; fragments of the epidermis of the petals in surface view [F, G, J], with a distinctly striated cuticle; fragments of large schizolysigenous oil glands in transverse section [E], which measure up to 100 µm in diameter. Examine under a microscope using a 20 g/L solution of *potassium hydroxide R*. The mounting medium becomes yellow because of the presence of hesperidin in the drug.

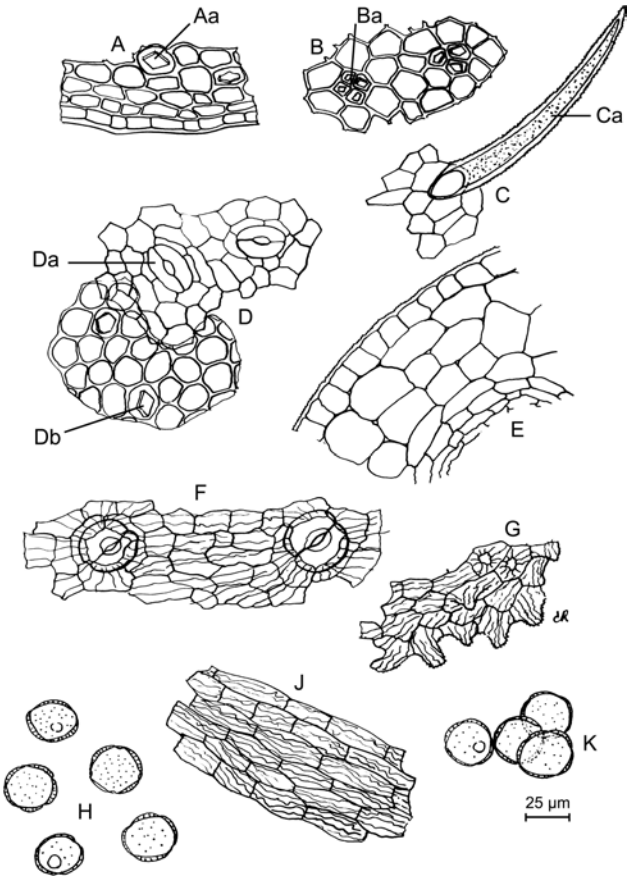

Figure 1810.-1. – *Illustration for identification test B of powdered herbal drug of bitter-orange flower*

C. Examine the chromatograms obtained in the test for sweet-orange flower.

Results: see below the sequence of zones present in the chromatograms obtained with the reference solution and the test solution.

Top of the plate	
	A weak yellow fluorescent zone
	A weak yellow fluorescent zone
Hesperidin: a greenish-yellow fluorescent zone	A greenish-yellow fluorescent zone (hesperidin)
Naringin: a yellow fluorescent zone	A yellow fluorescent zone (naringin)
	A red fluorescent zone (neoeriocitrin)
	A yellow fluorescent zone (diosmin and neodiosmin)
Reference solution	**Test solution**

TESTS

Sweet-orange flower. Thin-layer chromatography (*2.2.27*).

Test solution. To 0.5 g of the powdered herbal drug (355) (*2.9.12*) add 5 mL of *methanol R*. Heat with stirring at 40 °C for 10 min. Filter.

Reference solution. Dissolve 3.0 mg of *naringin R* and 3.0 mg of *hesperidin R* in 10 mL of *methanol R*.

Plate: *TLC silica gel plate R*.

Herbal drugs

Mobile phase: *water R*, *anhydrous formic acid R*, *ethyl acetate R* (10:15:75 *V/V/V*).

Application: 10 µL as bands.

Development: over a path of 10 cm.

Drying: in air; heat in an oven at 110-120 °C for 5 min.

Detection: spray the hot plate with a 10 g/L solution of *diphenylboric acid aminoethyl ester R* in *methanol R* and then with a 50 g/L solution of *macrogol 400 R* in *methanol R*; after at least 1 h, examine in ultraviolet light at 365 nm.

Results: the chromatogram obtained with the test solution shows a yellow zone similar in position to the zone of naringin in the chromatogram obtained with the reference solution, and immediately below it a red zone (neoeriocitrin).

Loss on drying (*2.2.32*): maximum 11.0 per cent, determined on 1.000 g of the powdered herbal drug (355) (*2.9.12*) by drying in an oven at 105 °C.

Total ash (*2.4.16*): maximum 10.0 per cent.

ASSAY

Stock solution. To 0.175 g of the powdered herbal drug (355) (*2.9.12*) add 95 mL of *ethanol (50 per cent V/V) R*. Heat on a water-bath under a reflux condenser for 30 min. Allow to cool and filter through a sintered-glass filter (*2.1.2*). Rinse the filter with 5 mL of *ethanol (50 per cent V/V) R*. Combine the filtrate and the rinsings in a volumetric flask and dilute to 100.0 mL with *ethanol (50 per cent V/V) R*.

Test solution. Into a test tube (10 mm × 180 mm) introduce 0.150 g of powdered *magnesium R* (250) (*2.9.12*), a magnetic stirring bar 25 mm long and 2.00 mL of the stock solution. Maintain the test tube upright, centrifuge at 125 *g* and carefully add dropwise, especially at the beginning, 2.0 mL of *hydrochloric acid R*, and then 6.0 mL of *ethanol (50 per cent V/V) R*. Stopper the tube and mix by inverting.

Compensation solution. Into a 2nd test tube, introduce 2.00 mL of the stock solution and carefully add dropwise, especially at the beginning, 2.0 mL of *hydrochloric acid R* and then 6.0 mL of *ethanol (50 per cent V/V) R*.

After 10 min, measure the absorbance (*2.2.25*) of the test solution at 530 nm.

Calculate the percentage content of total flavonoids, expressed as naringin, using the following expression:

$$\frac{A \times 9.62}{m}$$

i.e. taking the specific absorbance of the reaction product of naringin to be 52.

A = absorbance at 530 nm;

m = mass of the substance to be examined, in grams.

07/2012:2069

BLACK COHOSH

Cimicifugae rhizoma

DEFINITION

Dried, whole or fragmented rhizome and root of *Actaea racemosa* L. (syn. *Cimicifuga racemosa* (L.) Nutt.).

Content: minimum 1.0 per cent of triterpene glycosides, expressed as monoammonium glycyrrhizate ($C_{42}H_{65}NO_{16}$; M_r 840) (dried drug).

IDENTIFICATION

A. *Whole drug*. The rhizome is dark brown, hard, subcylindrical and somewhat knotted; 1.5-2.5 cm in diameter and 2-15 cm long; it shows numerous closely arranged, upright or curved branches each terminating in the remains of a bud or in a circular, cup-shaped scar. The fracture is horny, the transverse section shows a thin outer bark surrounding a ring of numerous pale, narrow wedges of vascular tissue alternating with darker medullary rays and a large central pith. Roots attached to the lower surface of the rhizome are usually broken off, leaving circular scars. The roots are dark brown, 1-3 mm in diameter, brittle, nearly cylindrical or obtusely quadrangular and longitudinally wrinkled; the fracture is short; the transverse section shows a wide outer bark, a dark brown cylinder, in which the central region is composed of 3-6 lighter wedges of vascular tissue united at the centre and separated by broad, non-lignified medullary rays.

Fragmented drug. More or less angular, irregular pieces of the rhizome and cylindrical pieces of the roots. The hard, horny rhizome fragments usually show a dark brown surface corresponding to the outer surface and several frequently striated, light brown surfaces corresponding to the section. The dark brown, more or less cylindrical root fragments are wrinkled longitudinally. The lighter coloured transverse section shows a distinct cambium line separating a thick outer bark from a central region composed of 3-6 wedges of vascular tissue united at the centre and separated by broad medullary rays.

B. Microscopic examination (*2.8.23*). The powder is light brown. Examine under a microscope using *chloral hydrate solution R*. The powder shows the following diagnostic characters: numerous fragments of thin-walled parenchyma; groups of small, lignified vessels with closely-arranged bordered pits or, less frequently, with reticulate thickening; lignified thin-walled fibres and xylem parenchyma; fragments of brown, suberised cells with moderately thickened walls. Examine under a microscope using a mixture of equal volumes of *glycerol R* and *water R*. The powder shows abundant starch granules, spherical or polygonal, simple or 2 or 3 (sometimes up to 6) compound; individual granules are 3-15 µm in diameter with a central, slit-shaped hilum.

C. Examine the chromatograms obtained in the test for substitution by *Cimicifuga americana* Michx., *C. foetida* L., *C. dahurica* (Turcz.) Maxim. or *C. heracleifolia* Kom.

Results B: use the chromatograms supplied with *Actaea racemosa HRS* and the chromatogram obtained with reference solution (a) to identify the bands corresponding to *A. racemosa*.

See below the sequence of zones present in the chromatograms obtained with reference solutions (a) and (b) and the test solution. Furthermore, other faint zones may be present in the chromatograms obtained with reference solution (a) and the test solution.

Top of the plate		
_____	_____	_____
Actein: a brown zone	Actein: a brown zone	A brown zone (actein)
23-Epi-26-deoxyactein: a brown zone		A brown zone (23-epi-26-deoxyactein)
_____	_____	_____
A violet zone		A violet zone
A violet zone		A violet zone
A brown zone		A brown zone
Reference solution (a)	**Reference solution (b)**	**Test solution**

TESTS

Loss on drying (*2.2.32*): maximum 12 per cent, determined on 1.000 g of the powdered herbal drug (355) (*2.9.12*) by drying in an oven at 105 °C for 2 h.

Foreign matter (*2.8.2*): maximum 5 per cent.

Total ash (*2.4.16*): maximum 10 per cent.

Ash insoluble in hydrochloric acid (*2.8.1*): maximum 5 per cent.

Substitution by *Cimicifuga americana* Michx., *C. foetida* L., *C. dahurica* (Turcz.) Maxim. or *C. heracleifolia* Kom. Thin-layer chromatography (*2.2.27*).

Test solution. To 0.50 g of the powdered herbal drug (355) (*2.9.12*) add 10 mL of *ethanol (50 per cent V/V) R* and shake well. Sonicate for 10 min and centrifuge. Use the supernatant.

Reference solution (a). To 0.50 g of *Actaea racemosa HRS* add 10 mL of *ethanol (50 per cent V/V) R* and shake well. Sonicate for 10 min and centrifuge. Use the supernatant.

Reference solution (b). Dissolve 2 mg of *actein R* in *methanol R* and dilute to 10 mL with the same solvent.

Plate: *TLC silica gel F_{254} plate R* (2-10 µm).

Mobile phase: *anhydrous formic acid R*, *ethyl formate R*, *toluene R* (20:30:50 *V/V/V*).

Application: 2 µL as bands of 8 mm (see Table 2069.-1).

Development: over a path of 6 cm.

Drying: in air.

System suitability: reference solution (b):

– the R_F value of the zone due to actein is between 0.35 and 0.40 (detection B).

Detection A: examine in ultraviolet light at 254 nm.

Results A: the chromatogram obtained with the test solution does not show any quenching zones more intense than those in the chromatogram obtained with reference solution (a) between R_F value 0.2 and R_F value 0.35.

Detection B: treat with a 10 per cent *V/V* solution of *sulfuric acid R* in *methanol R*; heat at 100 °C for 5 min; allow to cool to room temperature and examine in daylight.

Adulteration with *Cimicifuga americana* Michx., *C. foetida* L., *C. dahurica* (Turcz.) Maxim. and/or *C. heracleifolia* Kom. Thin-layer chromatography (*2.2.27*) as described in the test for substitution by *Cimicifuga americana* Michx., *C. foetida* L., *C. dahurica* (Turcz.) Maxim. or *C. heracleifolia* Kom., with the following modifications.

Reference solution (c). Dissolve 2 mg of *cimifugin R* in *methanol R* and dilute to 10 mL with the same solvent.

Application: 2 µL of reference solutions (b) and (c), 20 µL of the test solution and reference solution (a), as bands of 8 mm (see Table 2069.-2).

System suitability: reference solution (b):

– the R_F value of the zone due to actein is between 0.35 and 0.40 (detections B and C).

Detection A: examine in ultraviolet light at 254 nm.

Results A: absence of more than 10 per cent of *C. americana*.

Compare the chromatogram supplied with *Actaea racemosa HRS* for *C. americana* and the chromatograms obtained with the test solution and reference solution (a). The chromatogram obtained with the test solution does not show any quenching zone at R_F value 0.3 (zone presented in capitals in the chromatogram of *C. americana*, see below). The presence of this zone in the chromatogram obtained with the test solution indicates adulteration with *C. americana* at a level greater than 10 per cent.

Top of the plate	
_____	_____
A weak zone	A weak zone
2 weak zones	2 weak zones
A weak zone	A weak zone
_____	_____A DARK ZONE
A weak zone	A weak zone
A dark zone	A dark zone
A dark zone	A dark zone
Reference solution (a)	***C. americana* (10 per cent)**

Detection B: dissolve 4.5 g of *boric acid R* in 150 mL of *anhydrous ethanol R* (solution A); dissolve 5 g of *oxalic acid R* in 50 mL of *anhydrous ethanol R* (solution B); combine solutions A and B and mix well; treat the plate with this freshly prepared solution and heat at 120 °C for 5 min; examine in ultraviolet light at 365 nm.

Results B: absence of more than 5 per cent of *C. foetida*.

Compare the chromatogram supplied with *Actaea racemosa HRS* for *C. foetida* and the chromatograms obtained with the test solution and reference solutions (a), (b) and (c). The chromatogram obtained with the test solution does not show any intense fluorescent zone between R_F value 0.03 and R_F value 0.06 or at the same position as the bright fluorescent zone in the chromatogram obtained with reference solution (c) (zones presented in capitals in the chromatogram of *C. foetida*, see below). The presence of 1 or both zones in the chromatogram obtained with the test solution indicates adulteration with *C. foetida* at a level greater than 5 per cent.

Top of the plate			
_____	_____	_____	_____
Actein: a weak whitish zone	Actein: a weak whitish zone		A weak whitish zone (actein)
_____	_____	_____	_____
A bluish zone			A bluish zone
		Cimifugin: a bright fluorescent zone	A BRIGHT FLUORESCENT ZONE (CIMIFUGIN)
A brownish zone			A brownish zone
A bluish zone			A bluish zone
			A FLUORESCENT ZONE
Reference solution (a)	**Reference solution (b)**	**Reference solution (c)**	***C. foetida* (5 per cent)**

Detection C: dissolve 8 g of *antimony trichloride R* in 200 mL of *methylene chloride R*; treat with this solution and heat at 120 °C for 10 min; examine in ultraviolet light at 365 nm.

Herbal drugs

Results C: absence of more than 5 per cent of *C. heracleifolia* and/or *C. dahurica*.

Compare the chromatogram supplied with *Actaea racemosa HRS* for *C. heracleifolia* and *C. dahurica* and the chromatograms obtained with the test solution and reference solutions (a) and (b). The chromatogram obtained with the test solution does not show any bright fluorescent zone just above the zone due to actein (zone presented in capitals in the chromatogram of *C. heracleifolia* or *C. dahurica*, see below). The presence of this zone in the chromatogram obtained with the test solution indicates adulteration with *C. heracleifolia* and/or *C. dahurica* at a level greater than 5 per cent.

Top of the plate		
——— Actein: a weak brownish zone ——— A brownish zone A bluish zone	——— Actein: a weak brownish zone ———	——— A BRIGHT FLUORESCENT ZONE A weak brownish zone (actein) ——— A brownish zone A bluish zone
Reference solution (a)	**Reference solution (b)**	***C. heracleifolia* (5 per cent) and/or *C. dahurica* (5 per cent)**

ASSAY

Liquid chromatography (*2.2.29*).

Test solution. Introduce 4.00 g of the powdered herbal drug (355) (*2.9.12*) into a 200 mL screw-cap bottle. Add 50.0 mL of a mixture of equal volumes of *methanol R* and *water R*. Sonicate for 45 min and shake for 15 min. Filter through a membrane filter (nominal pore size 0.45 µm).

Reference solution (a). Dissolve 10.0 mg of *Actaea racemosa for assay CRS* (containing monoammonium glycyrrhizate) in *methanol R* with the aid of ultrasound and dilute to 10.0 mL with the same solvent.

Reference solution (b). Dilute 5.0 mL of reference solution (a) to 10.0 mL with *methanol R*.

Reference solution (c). Dilute 2.0 mL of reference solution (a) to 10.0 mL with *methanol R*.

Reference solution (d). Dilute 1.0 mL of reference solution (a) to 20.0 mL with *methanol R*.

Reference solution (e). Dissolve 500 mg of *Actaea racemosa dry extract for system suitability HRS* in *methanol R* and dilute to 10.0 mL with the same solvent; sonicate and filter through a membrane filter (nominal pore size 0.45 µm).

Column:
- *size*: *l* = 0.25 m, Ø = 4.6 mm;
- *stationary phase*: *octadecylsilyl silica gel for chromatography R* (5 µm).

Mobile phase:
- *mobile phase A*: 0.1 per cent *V/V* solution of *anhydrous formic acid R* in *water R*;
- *mobile phase B*: 0.1 per cent *V/V* solution of *anhydrous formic acid R* in a mixture of equal volumes of *acetonitrile R* and *methanol R*;

Time (min)	**Mobile phase A (per cent *V/V*)**	**Mobile phase B (per cent *V/V*)**
0 - 40	50 → 20	50 → 80
40 - 41	20 → 5	80 → 95
41 - 44	5	95

Flow rate: 1.0 mL/min.

Detection: evaporative light-scattering detector; the following settings have been found to be suitable; if the detector has different setting parameters, adjust the detector settings so as to comply with the system suitability criterion for the signal-to-noise ratio:
- *carrier gas*: *nitrogen R*;
- *flow rate*: 0.8 mL/min;
- *evaporator temperature*: 100 °C;
- *nebuliser temperature*: 60 °C.

Injection: 10 µL.

Identification of peaks: use the chromatogram supplied with *Actaea racemosa dry extract for system suitability HRS* and the chromatogram obtained with reference solution (e) to identify the peaks to be quantified.

System suitability:
- *signal-to-noise ratio*: minimum 4.0 for the peak due to monoammonium glycyrrhizate in the chromatogram obtained with reference solution (d);
- *peak-to-valley ratio*: minimum 3, where H_p = height above the baseline of peak 4 and H_v = height above the baseline of the lowest point of the curve separating this peak from peak 5 in the chromatogram obtained with reference solution (e).

Table 2069.-1. – *Application scheme*

Track	1	2	3	4	5	6	7
Application volume (µL)	2	2	2	-	2	2	2
Solution	Reference solution (a)	Reference solution (b)	Test solution	Blank	Reference solution (a)	Reference solution (b)	Test solution
After development, the plate is cut along track 4 (blank). Tracks 1-3 are used for detection of a substitution by *C. americana*, *C. foetida*, *C. dahurica* or *C. heracleifolia* (detection A), tracks 5-7 for identification C (detection B).							

Table 2069.-2. – *Application scheme*

Track	1	2	3	4	5	6	7	8	9
Application volume (µL)	20	2	2	20	-	20	2	2	20
Solution	Reference solution (a)	Reference solution (b)	Reference solution (c)	Test solution	Blank	Reference solution (a)	Reference solution (b)	Reference solution (c)	Test solution
After development and examination for detection of *C. americana* (detection A), the plate is cut along track 5 (blank). Tracks 1-4 are used for detection of adulteration with *C. foetida* (detection B), tracks 6-9 for detection of adulteration with *C. heracleifolia* and/or *C. dahurica* (detection C).									

Establish a calibration curve with the logarithm to base 10 of the concentration (in milligrams per millilitre) of reference solutions (a), (b), (c) and (d) (corrected by the assigned percentage content of monoammonium glycyrrhizate in *Actaea racemosa for assay CRS*) as the abscissa and the logarithm to base 10 of the corresponding peak area as the ordinate.

Calculate the percentage content of each peak using the following expression:

$$\frac{10^{A} \times 5}{m}$$

A = logarithm to base 10 of the concentration of each peak in the chromatogram obtained with the test solution, determined from the calibration curve;

m = mass of the herbal drug to be examined used to prepare the test solution, in grams.

Calculate the percentage content of triterpene glycosides by taking the sum of the percentage contents of peaks 1 to 12.

07/2011:1858

BLACK HOREHOUND

Ballotae nigrae herba

DEFINITION

Dried flowering tops of *Ballota nigra* L.

Content: minimum 1.5 per cent of total *ortho*-dihydroxycinnamic acid derivatives, expressed as acteoside ($C_{29}H_{36}O_{15}$; M_r 625) (dried drug).

IDENTIFICATION

A. The stems are conspicuously 4-angled, longitudinally striated, dark green or reddish-brown and more or less pubescent. The leaves are greyish-green, petiolate, the lamina ovate or orbicular, 2-4 cm wide, the margin irregularly crenate, and cuneate or cordate at the base; both surfaces are covered with abundant whitish hairs; the venation is pinnate, prominent on the lower surface, slightly depressed on the upper. The flowers are sessile or very shortly pedicellate, the calyx is infundibuliform, densely pubescent, with 10 prominent ribs and 5 subequal, broadly ovate teeth; the corolla, with a tube slightly shorter than the calyx tube, is purple and bilabiate, the upper lip pubescent on the outer surface and the lower lip with 3 lobes, the middle of which is notched.

B. Microscopic examination (*2.8.23*). The powder is greyish-green and slightly flocculent. Examine under a microscope using *chloral hydrate solution R*. The powder shows the following diagnostic characters (Figure 1858.-1): numerous long, uniseriate, multicellular covering trichomes consisting of 4 or more cells, thickened and swollen at the junctions, with slightly lignified and pitted walls, free [C] or on an epidermis in transverse section [Ea]; fewer glandular trichomes, usually on epidermises, in transverse section [E, F, G]: some with a unicellular or multicellular stalk and a globose, uni- or bicellular head [Ga], others with a unicellular stalk and a multicellular head in surface view [Ac] or in transverse section [Eb], others with a unicellular stalk and an 8-celled head of lamiaceous type, in surface view [Ad] or in transverse section [Fa]; fragments of the adaxial leaf epidermis [B] with cells with sinuous walls, accompanied by cells of the palisade parenchyma, most containing fine, needle-shaped crystals [Ba]; fragments of the abaxial leaf epidermis [A] bearing numerous stomata, the majority anomocytic (*2.8.3*) [Aa] but some diacytic [Ab]; fragments of the epidermis of the corolla composed of polygonal cells, those of the inner epidermis of the lips papillose [H] and those of the inner epidermis of the tube bearing uni- or bicellular covering trichomes in a stellate arrangement [K]; pollen grains subspherical with 3 pores and a smooth exine [D]; fragments from the stem (G) with groups of collenchymatous cells [Gb] and lignified vessels, with annular or spiral thickenings [J].

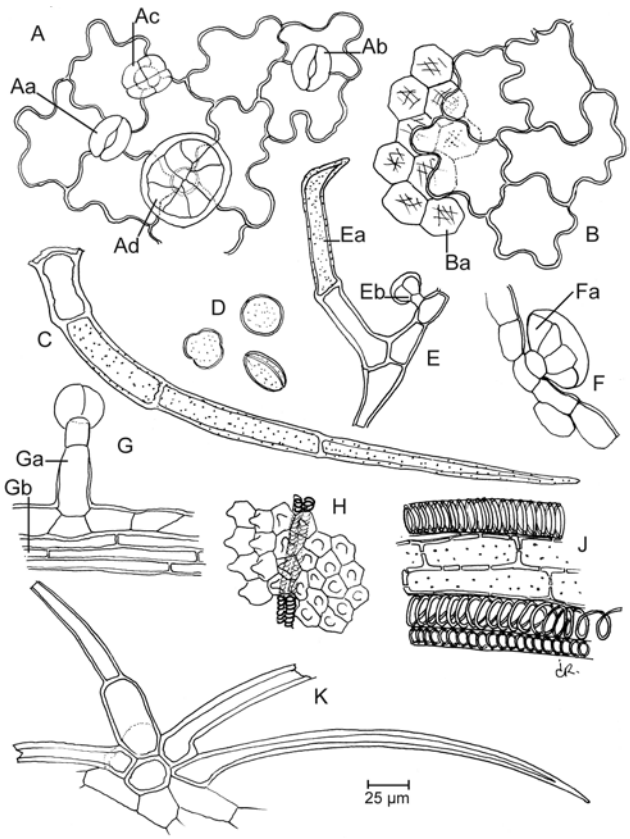

Figure 1858.-1. – *Illustration for identification test B of powdered herbal drug of black horehound*

C. Thin-layer chromatography (*2.2.27*).

Test solution. To 2 g of the powdered herbal drug (355) (*2.9.12*) add 100 mL of *methanol R*. Heat on a water-bath under a reflux condenser for 30 min. Allow to cool. Filter. Evaporate the filtrate under reduced pressure until a volume of about 10 mL is obtained.

Reference solution. Dissolve 1 mg of *chlorogenic acid R* and 2.5 mg of *rutin R* in 10 mL of *methanol R*.

Plate: *TLC silica gel plate R*.

Mobile phase: *anhydrous formic acid R*, *glacial acetic acid R*, *water R*, *ethyl acetate R* (7.5:7.5:18:67 *V/V/V/V*).

Application: 20 µL as bands.

Development: over a path of 15 cm.

Drying: in air.

Detection: spray with a solution containing 10 g/L of *diphenylboric acid aminoethyl ester R* and 50 g/L of *macrogol 400 R* in *methanol R*; allow to dry in a current of warm air; examine in ultraviolet light at 365 nm after 30 min.

Results: see below the sequence of zones present in the chromatograms obtained with the reference solution and the test solution. Furthermore, other fluorescent zones may be present in the chromatogram obtained with the test solution.

Top of the plate	
	A reddish fluorescent zone A faint yellow fluorescent zone A light blue fluorescent zone (caffeoylmalic acid) A greenish-blue fluorescent zone (acteoside) A yellowish-brown fluorescent zone (luteolin 7-lactate)
Chlorogenic acid: a light blue fluorescent zone	
	A greenish-blue fluorescent zone (forsythoside B)
Rutin: an orange-yellow fluorescent zone	2 greenish-blue fluorescent zones (arenarioside) A yellow fluorescent zone (luteolin 7-lactate glucoside). A faint greenish-blue fluorescent zone (ballotetroside).
Reference solution	**Test solution**

TESTS

Loss on drying (*2.2.32*): maximum 12.0 per cent, determined on 1.000 g of the powdered herbal drug (355) (*2.9.12*) by drying in an oven at 105 °C for 2 h.

Total ash (*2.4.16*): maximum 13.0 per cent.

ASSAY

Stock solution. Place 1.000 g of the powdered herbal drug (355) (*2.9.12*) in a flask. Add 90 mL of *ethanol (50 per cent V/V) R*. Heat under a reflux condenser on a water-bath for 30 min. Allow to cool and filter, collecting the filtrate in a 100 mL volumetric flask. Rinse the flask and the filter with 10 mL of *ethanol (50 per cent V/V) R*. Add the rinsings to the filtrate and dilute to 100.0 mL with *ethanol (50 per cent V/V) R*.

Test solution. Into a 10 mL volumetric flask, introduce successively, with shaking after each addition, 1.0 mL of the stock solution, 2 mL of *0.5 M hydrochloric acid*, 2 mL of a solution containing 100 g/L of *sodium nitrite R* and 100 g/L of *sodium molybdate R*, and 2 mL of *dilute sodium hydroxide solution R*, and dilute to 10.0 mL with *water R*.

Compensation liquid. Into a 10 mL volumetric flask, introduce 1.0 mL of the stock solution, 2 mL of *0.5 M hydrochloric acid* and 2 mL of *dilute sodium hydroxide solution R*, and dilute to 10.0 mL with *water R*.

Measure immediately the absorbance (*2.2.25*) of the test solution at 525 nm, by comparison with the compensation liquid.

Calculate the percentage content of total *ortho*-dihydroxycinnamic acid derivatives, expressed as acteoside, using the following expression:

$$\frac{A \times 1000}{185 \times m}$$

i.e. taking the specific absorbance of acteoside to be 185.

A = absorbance at 525 nm;

m = mass of the substance to be examined, in grams.

07/2013:2528

BLACKCURRANT LEAF

Ribis nigri folium

DEFINITION

Dried leaf of *Ribes nigrum* L.

Content: minimum 1.0 per cent of flavonoids, expressed as isoquercitroside ($C_{21}H_{20}O_{12}$; M_r 464.4) (dried drug).

IDENTIFICATION

A. The leaf is simple. The lamina may be up to 10 cm long and 12 cm wide and shows 3 (rarely 5) rounded triangular lobes, dentate or crenate on the margins, with the median lobe being the largest. The light-brown midrib and secondary veins are very visible on the lower surface, and form a characteristic network through numerous anastomoses. The rigid, light-brown petiole shows a very distinct gutter on the upper part and its length is equal to half the length of the lamina.

B. Microscopic examination (*2.8.23*). The powder is brownish-green. Examine under a microscope using *chloral hydrate solution R*. The powder shows the following diagnostic characters (Figure 2528.-1): curved, unicellular covering trichomes, with moderately thickened, slightly verrucose walls [D]; orange-yellow, globular or ovoid glandular trichomes, lacking a visible stalk, with a multicellular head up to 200 µm in diameter, in surface view [A]; fragments of the lower epidermis, in surface view [B], composed of cells with irregularly thickened walls [Ba], numerous anomocytic stomata (*2.8.3*) [Bb] accompanied by spongy parenchyma [Bc]; fragments, in surface view [C] or in transverse section [E], of the upper epidermis [Ca, Ea], accompanied by palisade parenchyma [Cb, Eb]; cluster crystals of calcium oxalate up to 30 µm in diameter, isolated [F] or included in parenchymatous cells [Bd, Cc, Ec].

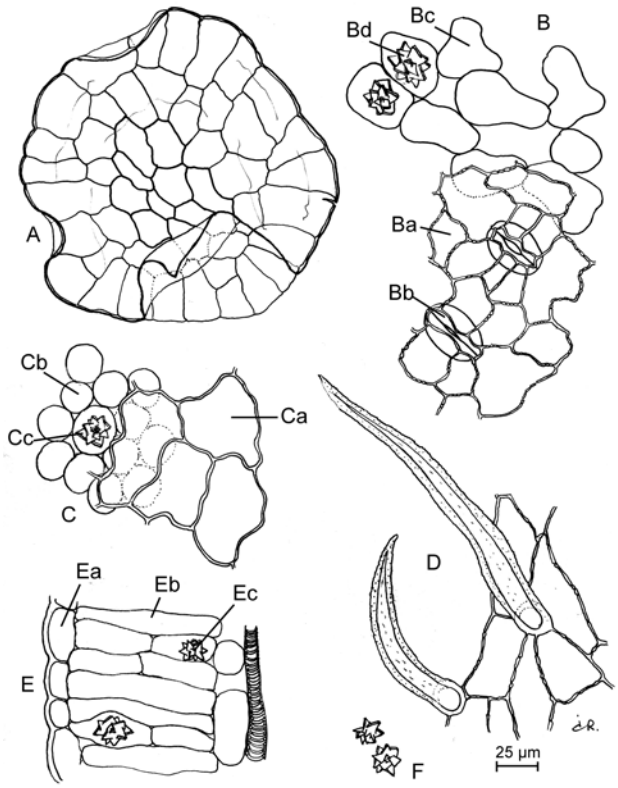

Figure 2528.-1. – *Illustration for identification test B of powdered herbal drug of blackcurrant leaf*

C. Thin-layer chromatography (*2.2.27*).

Test solution. To 1 g of the powdered herbal drug (355) (*2.9.12*) add 10 mL of *methanol R*. Heat in a water-bath at 60 °C for 10 min with occasional stirring. Allow to cool. Filter.

Reference solution. Dissolve 5 mg of *isoquercitroside R* and 5 mg of *rutin R* in 10 mL of *methanol R*.

Plate: *TLC silica gel plate R* (5-40 µm) [or *TLC silica gel plate R* (2-10 µm)].

Mobile phase: *anhydrous formic acid R*, *water R*, *ethyl acetate R* (10:10:80 *V/V/V*).

Application: 10 µL [or 5 µL] as bands of 10 mm [or 8 mm].

Development: over a path of 10 cm [or 6 cm].

Drying: at 100-105 °C for 10 min.

Detection: treat with a 10 g/L solution of *diphenylboric acid aminoethyl ester R* in *methanol R*, then with a 50 g/L solution of *macrogol 400 R* in *methanol R*; allow to dry in air for about 30 min, then examine in ultraviolet light at 365 nm.

Results: see below the sequence of zones present in the chromatograms obtained with the reference solution and the test solution. Furthermore, other fluorescent zones may be present in the chromatogram obtained with the test solution.

Top of the plate	
———	———
	A green zone
Isoquercitroside: an orange zone	An orange zone (mainly isoquercitroside)
	A light blue zone
———	———
Rutin: an orange-yellow zone	An orange-yellow zone (rutin)
Reference solution	**Test solution**

TESTS

Foreign matter (*2.8.2*): maximum 3 per cent.

Loss on drying (*2.2.32*): maximum 10.0 per cent, determined on 1.000 g of the powdered herbal drug (355) (*2.9.12*) by drying in an oven at 105 °C for 2 h.

Total ash (*2.4.16*): maximum 12.0 per cent.

ASSAY

Liquid chromatography (*2.2.29*).

Test solution. Disperse 0.200 g of the powdered herbal drug (355) (*2.9.12*) in 10 mL of an 80 per cent *V/V* solution of *methanol R*. Heat under a reflux condenser in a water-bath at 60 °C for 30 min. Sonicate for 15 min. Allow to cool, dilute to 20.0 mL with an 80 per cent *V/V* solution of *methanol R*. Filter through a membrane filter (nominal pore size 0.45 µm).

Reference solution (a). Dissolve 5.0 mg of *isoquercitroside CRS* in an 80 per cent *V/V* solution of *methanol R* and dilute to 100.0 mL with the same solution.

Reference solution (b). Dissolve 5.0 mg of *rutin R* in *methanol R* and dilute to 100.0 mL with the same solvent.

Reference solution (c). Dilute 10.0 mL of reference solution (a) to 20.0 mL with reference solution (b).

Reference solution (d). Dilute 1.0 mL of reference solution (a) to 20.0 mL with an 80 per cent *V/V* solution of *methanol R*.

Column:

- *size*: *l* = 0.25 m, Ø = 4 mm;
- *stationary phase*: *end-capped octadecylsilyl silica gel for chromatography R* (5 µm);
- *temperature*: 30 °C.

Mobile phase:

- *mobile phase A*: 0.05 per cent *V/V* solution of *trifluoroacetic acid R*;
- *mobile phase B*: *acetonitrile R*;

Time (min)	Mobile phase A (per cent *V/V*)	Mobile phase B (per cent *V/V*)
0 - 45	97 → 60	3 → 40

Flow rate: 1.0 mL/min.

Detection: spectrophotometer at 350 nm.

Injection: 10 µL.

Identification of peaks: use the chromatogram obtained with reference solution (a) to identify the peak due to isoquercitroside and the chromatogram obtained with reference solution (b) to identify the peak due to rutin.

Retention time: rutin = about 28 min; isoquercitroside = about 29 min.

System suitability: reference solution (c):

- *resolution*: minimum 3.0 between the peaks due to rutin and isoquercitroside.

Disregard limit: the area of the principal peak in the chromatogram obtained with reference solution (d).

Calculate the percentage content of total flavonoids, expressed as isoquercitroside, using the following expression:

$$\frac{A_1 \times m_2 \times p}{A_2 \times m_1 \times 5}$$

A_1 = sum of the areas of the peak due to rutin and all peaks eluting after the peak due to rutin in the chromatogram obtained with the test solution;

A_2 = area of the peak due to isoquercitroside in the chromatogram obtained with reference solution (a);

m_1 = mass of the herbal drug to be examined used to prepare the test solution, in grams;

m_2 = mass of *isoquercitroside CRS* used to prepare reference solution (a), in grams;

p = percentage content of isoquercitroside in *isoquercitroside CRS*.

01/2008:1605
corrected 6.0

BOGBEAN LEAF

Menyanthidis trifoliatae folium

DEFINITION

Dried, entire or fragmented leaf of *Menyanthes trifoliata* L.

CHARACTERS

Very bitter and persistant taste.

IDENTIFICATION

A. The leaf is long-petiolated, trifoliate, with long sheaths from the base; the petiole is up to 5 mm in diameter and strongly striated longitudinally. The lamina is divided into equal leaflets, sessile, obovate up to 10 cm long and up to 5 cm wide, with an entire, occasionally sinuous margin with brownish or reddish hydathodes and a spathulate base; it is glabrous, dark green on the upper surface and paler green on the lower surface, with a wide, whitish, finely striated prominent midrib.

B. Reduce to a powder (355) (*2.9.12*). The powder is yellowish-green. Examine under a microscope using *chloral hydrate solution R*. The powder shows fragments of upper epidermis with polyhedral cells and thin wavy walls; fragments of lower epidermis with sinuous walls; anomocytic stomata (*2.8.3*), on both surfaces, with the subsidiary cells showing radiating striations; epidermal cells from the veins straight walled and papillose; fragments of mesophyll parenchyma with large intercellular spaces (aerenchyma); irregular cells with rare sclereids; fragments of spiral or annular vessels.

C. Thin-layer chromatography (*2.2.27*).

Test solution. To 1.0 g of the powdered herbal drug (355) (*2.9.12*) add 10 mL of *methanol R*. Heat, with stirring, in a water-bath at 60 °C for 5 min. Allow to cool and

Herbal drugs

filter. Evaporate to dryness under reduced pressure in a water-bath at 60 °C. Dissolve the residue in 2.0 mL of *methanol R*.

Reference solution. Dissolve 5 mg of *loganin R* in 15 mL of *methanol R*.

Plate: *TLC silica gel plate R*.

Mobile phase: *water R*, *methanol R*, *ethyl acetate R* (8:15:77 *V/V/V*).

Application: 30 µL, as bands.

Development: over a path of 15 cm.

Drying: in air.

Detection: spray with *vanillin reagent R*. Heat in an oven at 100-105 °C for 10 min. Examine in daylight.

Results: see below the sequence of the zones present in the chromatograms obtained with the reference and test solutions. Furthermore, other zones are present in the chromatogram obtained with the test solution.

Top of the plate	
Loganine: a greyish-violet zone	A violet zone An intense blue zone A violet to greyish-violet zone A grey to greyish-blue zone A brownish zone
Reference solution	**Test solution**

TESTS

Loss on drying (*2.2.32*): maximum 10.0 per cent, determined on 1.000 g of the powdered herbal drug (355) (*2.9.12*) by drying in an oven at 105 °C for 2 h.

Total ash (*2.4.16*): maximum 10.0 per cent.

Bitterness value (*2.8.15*): minimum 3000.

01/2008:1396

BOLDO LEAF

Boldi folium

DEFINITION

Whole or fragmented dried leaf of *Peumus boldus* Molina.

Content: minimum 0.1 per cent of total alkaloids, expressed as boldine ($C_{19}H_{21}NO_4$; M_r 327.4) (anhydrous drug).

CHARACTERS

Characteristic odour, especially when rubbed.

IDENTIFICATION

A. The leaf is oval or elliptical usually 5 cm long with a short petiole, an obtuse or slightly emarginate or mucronate apex and an equal and rounded base; the margin is entire and slightly undulate and the thickened edges are more or less revolute. The lamina is greyish-green, thick, tough and brittle. The upper surface is rough with numerous prominent small protuberances and a depressed venation. The lower surface is finely pubescent, with the protuberances less well-marked, and a prominent, pinnate venation.

B. Reduce to a powder (355) (*2.9.12*). The powder is greyish-green. Examine under a microscope using *chloral hydrate solution R*. The powder shows fragments of the upper epidermis and underlying hypodermis with straight or slightly sinuous thickened and beaded walls, those of the lower epidermis with numerous stomata surrounded by 4-7 subsidiary cells; solitary, bifurcated or stellate clustered unicellular covering trichomes with more or less thickened and lignified walls; fragments of the lamina showing a two-layered palisade; debris of the spongy mesophyll including numerous large, rounded oil cells and parenchyma containing fine needle-shaped crystals; thick-walled fibres and lignified, pitted parenchymatous cells associated with vascular tissue from the veins.

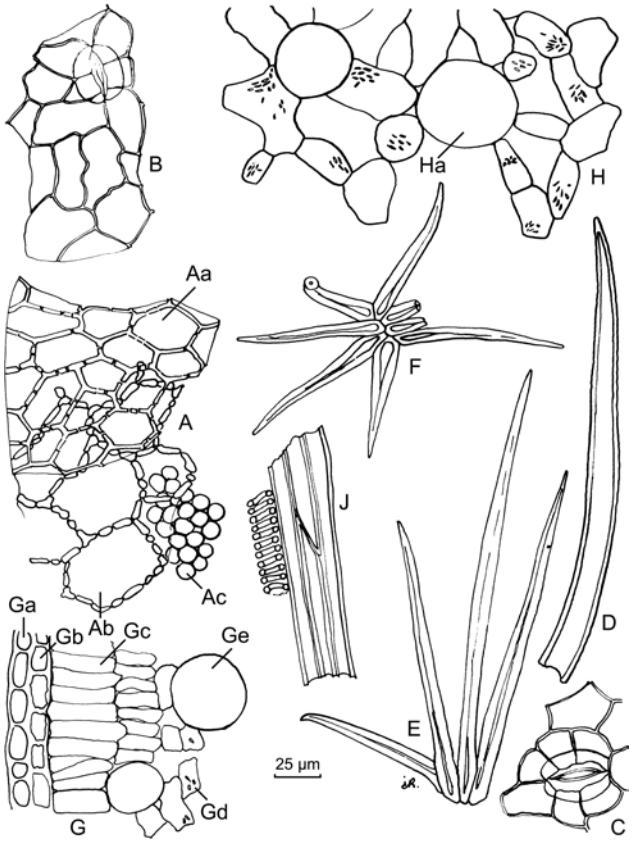

A. Fragment of the lamina, in surface view, showing the upper epidermis (Aa), hypodermis with thickened and beaded walls (Ab), and palisade parenchyma (Ac)

B and C. Lower epidermis with stomata surrounded by 4-7 subsidiary cells

D. Unicellular covering trichome, solitary

E and F. Unicellular covering trichomes, stellate clustered

G. Fragment of the lamina, in transverse section, showing the upper epidermis (Ga), hypodermis (Gb), palisade parenchyma (Gc) and spongy parenchyma (Gd) containing oil cells (Ge)

H. Spongy parenchyma containing fine needle-shaped crystals and oil cells (Ha)

J. Vascular tissue with fibres

Figure 1396.-1. – *Illustration of powdered herbal drug of boldo leaf (see Identification B)*

C. Thin-layer chromatography (*2.2.27*).

Test solution. Mix 1.5 g of the powdered herbal drug (355) (*2.9.12*) and 5 mL of *methanol R* and sonicate for 10 min. Filter the supernatant through a 3 cm × 0.5 cm column of *cellulose for chromatography R1*. Use the first 1 mL of the eluate as the test solution.

Reference solution. Dissolve 2 mg of *boldine R* and 10 mg of *hyoscine hydrobromide R* in 5 mL of *methanol R*.

Plate: *TLC silica gel plate R* (5-40 µm) [or *TLC silica gel plate R* (2-10 µm)].

Mobile phase: *diethylamine R*, *methanol R*, *toluene R* (10:10:80 *V/V/V*).

Application: 40 µL [or 6 µL] of the test solution and 20 µL [or 2 µL] of the reference solution, as bands of 15 mm [or 8 mm].

Development: over a path of 15 cm [or 6 cm].

Drying: in air.

Herbal drugs

Detection: spray with *potassium iodobismuthate solution R2*, dry for 5 min in air and spray with *sodium nitrite solution R*; examine in daylight after 30 min.

Results: see below the sequence of zones present in the chromatograms obtained with the reference solution and the test solution.

Top of the plate	
	A yellowish-brown zone
Hyoscine: a pale brown zone	
	A yellow zone
	A brown zone
	A brown zone
Boldine: a brown zone	A brown zone (boldine)
	Several zones
Reference solution	**Test solution**

TESTS

Essential oil (*2.8.12*): maximum 40 mL/kg (anhydrous drug).

Use 10.0 g of the freshly fragmented drug, a 1000 mL flask and 300 mL of *water R* as the distillation liquid. Distil at a rate of 2-3 mL/min for 3 h.

Foreign matter (*2.8.2*): maximum 4 per cent of twigs and maximum 2 per cent of other foreign matter.

Water (*2.2.13*): maximum 100 mL/kg, determined by distillation of 20.0 g of the powdered herbal drug (355) (*2.9.12*).

Total ash (*2.4.16*): maximum 13.0 per cent.

ASSAY

Alkaloids. Liquid chromatography (*2.2.29*).

Test solution. To 1.000 g of the powdered herbal drug (355) (*2.9.12*) add 50 mL of *dilute hydrochloric acid R*. Shake in a water-bath at 80 °C for 30 min. Filter, take up the residue with 50 mL of *dilute hydrochloric acid R* and shake in a water-bath at 80 °C for 30 min. Filter and repeat the operation once on the residue obtained. Filter. Combine the cooled filtrates and shake with 100 mL of a mixture of equal volumes of *ethyl acetate R* and *hexane R*. Discard the organic layer. Adjust the aqueous layer to pH 9.5 with *dilute ammonia R1*. Shake successively with 100 mL, 50 mL and 50 mL of *methylene chloride R*. Combine the lower layers and evaporate to dryness under reduced pressure. Dissolve the residue in the mobile phase and dilute to 10.0 mL with the mobile phase.

Reference solution. Dissolve 12 mg of *boldine CRS* in the mobile phase and dilute to 100.0 mL with the mobile phase. Dilute 1.0 mL of this solution to 10.0 mL with the mobile phase.

Column:

- *size*: *l* = 0.25 m, Ø = 4.6 mm;
- *stationary phase*: *octadecylsilyl silica gel for chromatography R* (5 µm).

Solution A. Mix 0.2 mL of *diethylamine R* and 99.8 mL of *acetonitrile R*.

Solution B. Mix 0.2 mL of *diethylamine R* and 99.8 mL of *water R* and adjust to pH 3 with *anhydrous formic acid R*.

Mobile phase: solution A, solution B (16:84 *V/V*).

Flow rate: 1.5 mL/min.

Detection: spectrophotometer at 304 nm.

Injection: 20 µL.

Relative retention with reference to boldine (retention time = about 6 min): isoboldine = about 0.9; isocorydine *N*-oxide = about 1.8; laurotetanine = about 2.2; isocorydine = about 2.8; *N*-methyllaurotetanine = about 3.2. Additional peaks may be present.

System suitability: test solution:

- *resolution*: minimum 1 between the peaks due to isoboldine and boldine.

Calculate the percentage content of total alkaloids expressed as boldine using the following expression:

$$\frac{(\sum A_1) \times m_2 \times p}{A_2 \times m_1 \times 100}$$

m_1 = mass of the herbal drug to be examined, in grams;

m_2 = mass of *boldine CRS* in the reference solution, in grams;

ΣA_1 = sum of the areas of the peaks due to the 6 alkaloids identified in the chromatogram obtained with the test solution;

A_2 = area of the peak due to boldine in the chromatogram obtained with the reference solution;

p = percentage content of boldine in *boldine CRS*.

04/2008:1816

BOLDO LEAF DRY EXTRACT

Boldi folii extractum siccum

DEFINITION

Extract produced from *Boldo leaf (1396)*.

Content:

- *for aqueous extracts*: minimum 0.5 per cent of total alkaloids, expressed as boldine ($C_{19}H_{21}NO_4$; M_r 327.4) (dried extract);
- *for hydroalcoholic extracts*: minimum 1.0 per cent of total alkaloids, expressed as boldine ($C_{19}H_{21}NO_4$; M_r 327.4) (dried extract).

PRODUCTION

The extract is produced from the herbal drug by a suitable procedure using either hot water at not less than 65 °C or a hydroalcoholic solvent equivalent in strength to ethanol (45-75 per cent *V/V*).

CHARACTERS

Appearance: brown or greenish-brown, hygroscopic powder.

IDENTIFICATION

Thin-layer chromatography (*2.2.27*).

Test solution. To 0.5 g of the extract to be examined add 1 mL of *hydrochloric acid R* and 20 mL of *water R*. Sonicate for 10 min. Transfer the liquid to a separating funnel and make alkaline with 2 mL of *dilute ammonia R1*. Shake with 2 quantities, each of 20 mL, of *methylene chloride R*. Evaporate the combined organic layers to dryness. Dissolve the residue in 1 mL of *methanol R*.

Reference solution. Dissolve 2 mg of *boldine R* and 10 mg of *hyoscine hydrobromide R* in 5 mL of *methanol R*.

Plate: *TLC silica gel plate R* (5-40 µm) [or *TLC silica gel plate R* (2-10 µm)].

Mobile phase: *diethylamine R*, *methanol R*, *toluene R* (10:10:80 *V/V/V*).

Application: 20 µL [or 3 µL], as bands of 15 mm [or 8 mm].

Development: over a path of 15 cm [or 6 cm].

Drying: in air.

Herbal drugs

Detection: spray with *potassium iodobismuthate solution R2*, allow to dry in air for 5 min and spray with *sodium nitrite solution R*; examine in daylight after 30 min.

Results: see below the sequence of zones present in the chromatograms obtained with the reference solution and the test solution. Furthermore, other faint zones may be present in the chromatogram obtained with the test solution.

Top of the plate	
Hyoscine: a pale brown zone	A yellowish-brown zone An orange-yellow zone An orange zone An orange zone
Boldine: a brown zone	A brown zone (boldine) Several orange zones
Reference solution	**Test solution**

ASSAY

Liquid chromatography (*2.2.29*).

Test solution. To 1.000 g of the extract to be examined add 50 mL of *dilute hydrochloric acid R* and sonicate for 10 min. Transfer to a separating funnel and wash with 10 mL of a mixture of equal volumes of *ethyl acetate R* and *hexane R*. Adjust the aqueous phase to pH 9.5 with *dilute ammonia R1*. After cooling, shake successively with 100 mL, 50 mL, and a further 50 mL of *methylene chloride R*, taking care not to form an emulsion. Evaporate the combined lower layers to dryness under reduced pressure. Dissolve the residue in the mobile phase and transfer the solution to a volumetric flask. Rinse and dilute to 10.0 mL with the mobile phase.

Reference solution. Dissolve 12.0 mg of *boldine CRS* in the mobile phase and dilute to 100.0 mL with the mobile phase.

Column:

- *size*: l = 0.25 m, Ø = 4.6 mm;
- *stationary phase*: *octadecylsilyl silica gel for chromatography R* (5 µm).

Solution A. Mix 0.2 mL of *diethylamine R* with 99.8 mL of *acetonitrile R*.

Solution B. Mix 0.2 mL of *diethylamine R* with 99.8 mL of *water R* and adjust to pH 3 with *anhydrous formic acid R*.

Mobile phase: solution A, solution B (16:84 *V/V*).

Flow rate: 1.5 mL/min.

Detection: spectrophotometer at 304 nm.

Injection: 20 µL.

Relative retention with reference to boldine (retention time = about 6 min): isoboldine = about 0.9; isocorydine *N*-oxide = about 1.8; laurotetanine = about 2.2; isocorydine = about 2.8; *N*-methyllaurotetanine = about 3.2. Additional peaks may be present.

System suitability: test solution:

- *resolution*: minimum 1.0 between the peaks due to isoboldine and boldine.

Calculate the percentage content of total alkaloids, expressed as boldine, using the following expression:

$$\frac{\left(\sum A_1\right) \times m_2 \times p}{A_2 \times m_1 \times 10}$$

ΣA_1 = sum of the areas of the peaks due to the 6 alkaloids identified in the chromatogram obtained with the test solution;

A_2 = area of the peak due to boldine in the chromatogram obtained with the reference solution;

m_1 = mass of the extract to be examined used to prepare the test solution, in grams;

m_2 = mass of *boldine CRS* used to prepare the reference solution, in grams;

p = percentage content of boldine in *boldine CRS*.

07/2013:2184

BUCKWHEAT HERB

Fagopyri herba

DEFINITION

Whole or fragmented aerial parts of *Fagopyrum esculentum* Moench, collected in the early flowering period prior to fruiting and dried immediately.

Content: minimum 3.0 per cent of rutin ($C_{27}H_{30}O_{16}$; M_r 611) (dried drug).

IDENTIFICATION

A. The stem is cylindrical, hollow, finely ridged longitudinally, about 2-6 mm in diameter, brownish-green or reddish, with few branches and thickened at the internodes; the leaves are arranged spirally and have membranous, sheathing stipules; the surface is glabrous except in the region of the stipules, where short, white hairs may occur. The leaves are dark green, paler on the lower surface, up to 7 cm wide and 11 cm long, saggitate or cordate, almost pentagonal with 2 widely rounded lobes; the lower leaves are petiolate, the upper leaves sessile or amplexicaul; the lamina is glabrous and the margin finely sinuate and fringed with minute, reddish-brown projections; similar projections occur on the veins on the upper surface. The inflorescence is a cymose panicle, the individual flowers 1-2 mm long and 6 mm in diameter with 5 free, white or reddish petals.

B. Microscopic examination (*2.8.23*). The powder is dark green. Examine under a microscope using *chloral hydrate solution R*. The powder shows the following diagnostic characters (Figure 2184.-1): fragments of the epidermis of the stem, in surface view [D], composed of elongated cells showing striations on the outer walls [Da] and anomocytic stomata (*2.8.3*) [Db]; fragments of the upper epidermis of the lamina, in surface view [B], consisting of polygonal cells covered by a striated cuticle [Ba] and anomocytic stomata [Bb], often accompanied by palisade parenchyma [Bc]; fragments of the epidermis of the leaf margins [A] and of the epidermis covering the veins, often showing ovoid or rounded papilla-like projections, often reddish, with thickened and striated walls; fragments of the lower epidermis of the lamina [C] with thin-walled polygonal cells, numerous stomata [Ca] and rare glandular trichomes with a biseriate stalk and a globular head usually composed of 8 cells [Cb]; fragments of mesophyll [F] with narrow, annular or spiral vessels [Fa] and of spongy parenchyma, numerous cells of which contain cluster crystals of calcium oxalate, varying in diameter (25-100 µm) [Fb], smaller prismatic crystals of calcium oxalate [Fc], occurring scattered in the mesophyll and also in the parenchyma of the stem; fragments of lignified tissue [H] with bordered-pitted [Ha], reticulate or annular [Hb]

Herbal drugs

vessels and thin-walled, pitted fibres [Hc]; occasional fragments of the corolla with a papillose epidermis [E]; spherical or ovoid pollen grains, about 50 µm in diameter, with a pitted exine and 3 furrows [G].

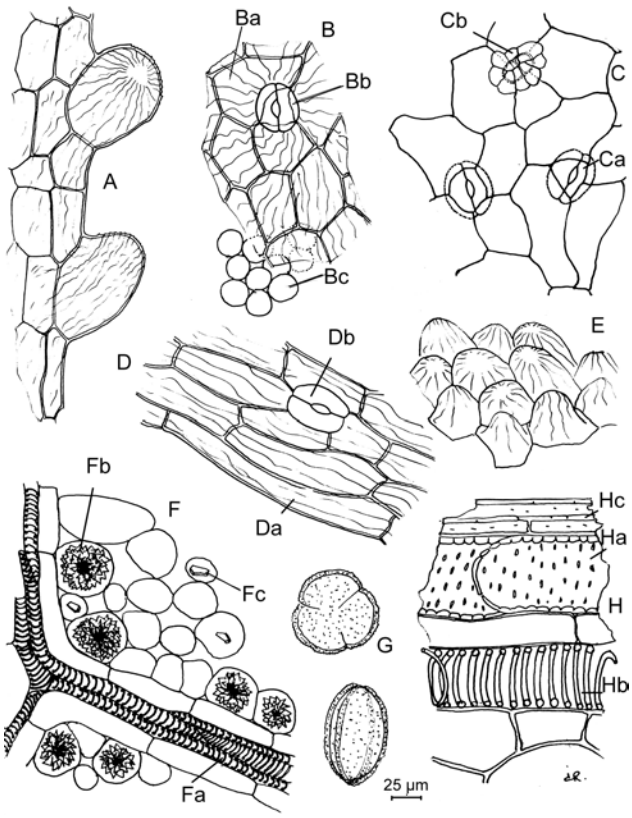

Figure 2184.-1. – *Illustration for identification test B of powdered herbal drug of buckwheat herb*

C. Thin-layer chromatography (*2.2.27*).

Test solution. To 0.5 g of the powdered herbal drug (355) (*2.9.12*) add 5.0 mL of *methanol R* and heat in a water-bath at 60 °C under a reflux condenser for 10 min. Cool and filter.

Reference solution. Dissolve 10 mg of *hyperoside R* and 10 mg of *rutin R* in 10 mL of *methanol R*.

Plate: *TLC silica gel plate R* (5-40 µm) [or *TLC silica gel plate R* (2-10 µm)].

Mobile phase: *anhydrous formic acid R*, *water R*, *ethyl acetate R* (10:10:80 *V/V/V*).

Application: 20 µL [or 5 µL] as bands of 15 mm [or 8 mm].

Development: over a path of 10 cm [or 6 cm].

Drying: at 100-105 °C.

Detection: treat with a 10 g/L solution of *diphenylboric acid aminoethyl ester R* in *methanol R*, subsequently treat with a 50 g/L solution of *macrogol 400 R* in *methanol R*; allow to dry in air for about 30 min and examine in ultraviolet light at 365 nm.

Results: see below the sequence of zones present in the chromatograms obtained with the reference solution and the test solution. Furthermore, other fluorescent zones may be present in the chromatogram obtained with the test solution.

Top of the plate	
	2 red zones
	1-2 light blue zones
———	———
	An orange zone
	An orange zone
Hyperoside: an orange zone	2 blue zones
———	———
Rutin: an orange-yellow zone	An orange-yellow zone (rutin)
Reference solution	**Test solution**

TESTS

Loss on drying (*2.2.32*): maximum 10.0 per cent, determined on 1.000 g of the powdered herbal drug (355) (*2.9.12*) by drying in an oven at 105 °C for 2 h.

Total ash (*2.4.16*): maximum 15.0 per cent.

ASSAY

Liquid chromatography (*2.2.29*).

Test solution. To 0.500 g of the powdered herbal drug (355) (*2.9.12*), add 30 mL of an 80 per cent *V/V* solution of *methanol R*. Heat the mixture under a reflux condenser in a water-bath at 60 °C for 30 min, then extract the mixture in an ultrasonic bath for 15 min. Allow to cool, dilute to 50.0 mL with an 80 per cent *V/V* solution of *methanol R* and filter.

Reference solution (a). Dissolve 25.0 mg of *rutoside trihydrate CRS* in an 80 per cent *V/V* solution of *methanol R* and dilute to 50.0 mL with the same solvent.

Reference solution (b). Dissolve 20.0 mg of *troxerutin R* and 5.0 mg of *quercitrin R* in an 80 per cent *V/V* solution of *methanol R* and dilute to 50.0 mL with the same solvent.

Column:

- *size*: *l* = 0.125 m, Ø = 4 mm;
- *stationary phase*: *octadecylsilyl silica gel for chromatography R* (5 µm);
- *temperature*: 30 °C.

Mobile phase:

- *mobile phase A*: mix 50 volumes of *acetonitrile R* and 950 volumes of *water R* adjusted to pH 2 with *phosphoric acid R*;
- *mobile phase B*: mix 95 volumes of *water R* adjusted to pH 2 with *phosphoric acid R* and 905 volumes of *acetonitrile R*;

Time (min)	Mobile phase A (per cent *V/V*)	Mobile phase B (per cent *V/V*)
0 - 6	94	6
6 - 16.5	94 → 85	6 → 15
16.5 - 22	85 → 76	15 → 24
22 - 25	76 → 59	24 → 41

Flow rate: 1.0 mL/min.

Detection: spectrophotometer at 350 nm.

Injection: 10 µL.

System suitability: reference solution (b):

- *elution order*: order indicated in the composition of reference solution (b), when the chromatogram is recorded in the prescribed conditions;
- *resolution*: minimum 3 between the peaks due to troxerutin and quercitrin.

Using the retention times determined from the chromatogram obtained with reference solution (a), locate the peak due to rutin in the chromatogram obtained with the test solution.

Calculate the percentage content of rutin using the following expression:

$$\frac{A_1 \times m_2 \times p}{A_2 \times m_1}$$

A_1 = area of the peak due to rutin in the chromatogram obtained with the test solution;

A_2 = area of the peak due to rutin in the chromatogram obtained with reference solution (a);

m_1 = mass of the herbal drug to be examined used to prepare the test solution, in grams;

m_2 = mass of *rutoside trihydrate CRS* used to prepare reference solution (a), in grams;

p = percentage content of rutin in *rutoside trihydrate CRS*.

01/2011:1847

BUTCHER'S BROOM

Rusci rhizoma

DEFINITION

Dried, whole or fragmented underground parts of *Ruscus aculeatus* L.

Content: minimum 1.0 per cent of total sapogenins, expressed as ruscogenins [mixture of neoruscogenin ($C_{27}H_{40}O_4$; M_r 428.6) and ruscogenin ($C_{27}H_{42}O_4$; M_r 430.6)] (dried drug).

IDENTIFICATION

A. The rhizome consists of yellowish, branched, articulated, somewhat knotty pieces, cylindrical or subconical, about 5-10 cm long and about 5 mm thick. The surface is marked with thin annulations about 1-3 mm wide, separated from one another; rounded scars of the aerial stems are present on the upper surface. On the lower surface numerous roots, or their scars, occur; the roots are about 2 mm in diameter and similar in colour to the rhizome. The outer layer is easily detached, revealing a yellowish-white, very hard central cylinder.

B. Reduce to a powder (355) (*2.9.12*). The powder is yellowish. Examine under a microscope using *chloral hydrate solution R*. The powder shows the following diagnostic characters (Figure 1847.-1): groups of sclereids of the rhizome, with variously-shaped cells, rounded, elongated or rectangular; the walls are moderately thickened and distinctly beaded, with large, rounded or oval pits [F, G, L, P, Q]; fragments of the endodermis composed of a single layer of irregularly thickened cells [K]; groups of rounded parenchymatous cells, thickened at the corners, with small, triangular intercellular spaces [D, E, N]; thin-walled parenchyma [J] with some cells containing raphides of calcium oxalate [C]; groups [H] of thick-walled fibres [Ha] and small vessels, up to about 50 µm in diameter, the walls showing numerous small, slit-shaped pits [A, Hb]; rare fragments of dermal tissue of the root [B]; raphides of calcium oxalate, isolated [M].

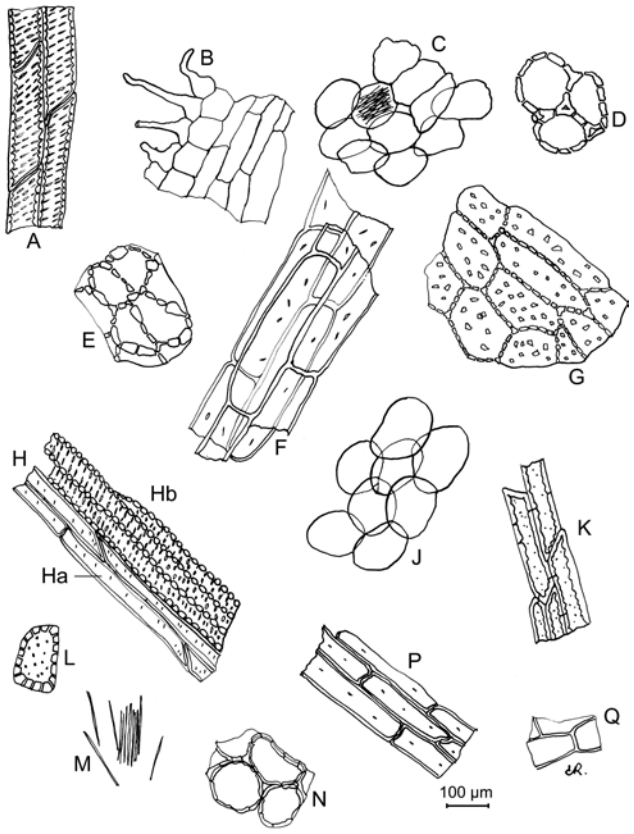

Figure 1847.-1. – *Illustration for identification test B of powdered herbal drug of butcher's broom*

C. Thin-layer chromatography (*2.2.27*).

Test solution. Introduce 1.0 g of the powdered herbal drug (355) (*2.9.12*) and 50 mL of *dilute hydrochloric acid R* into a 100 mL flask with a ground-glass neck. Heat on a water-bath under a reflux condenser for 40 min. Allow to cool and extract the unfiltered mixture with 3 quantities, each of 25 mL, of *methylene chloride R*. Combine the organic solutions and dry over *anhydrous sodium sulfate R*. Filter and evaporate to dryness. Dissolve the residue in 5 mL of *methanol R*.

Reference solution. Dissolve 1 mg of *ruscogenins CRS* and 1 mg of *stigmasterol R* in *methanol R* and dilute to 5 mL with the same solvent.

Plate: *TLC silica gel plate R* (5-40 µm) [or *TLC silica gel plate R* (2-10 µm)].

Mobile phase: *methanol R*, *methylene chloride R* (7:93 *V/V*).

Application: 10 µL [or 4 µL] as bands.

Development: over a path of 15 cm [or 6 cm].

Drying: in air.

Detection: spray with *vanillin reagent R*, dry in an oven at 100-105 °C for 1 min and examine in daylight.

Results: see below the sequence of zones present in the chromatograms obtained with the reference solution and the test solution. Furthermore, other weak zones may be present in the chromatogram obtained with the test solution.

Herbal drugs

Top of the plate	
	Several zones of various colours
Stigmasterol: a violet zone	A violet zone
———	———
	A violet zone
Ruscogenins: a yellow zone	A yellow zone (ruscogenins)
	Several zones of various colours
———	———
Reference solution	**Test solution**

TESTS

Foreign matter (*2.8.2*): maximum 5 per cent.

Loss on drying (*2.2.32*): maximum 12.0 per cent, determined on 1.000 g of the powdered herbal drug (355) (*2.9.12*) by drying in an oven at 105 °C for 2 h.

Total ash (*2.4.16*): maximum 12.0 per cent.

Ash insoluble in hydrochloric acid (*2.8.1*): maximum 5.0 per cent.

ASSAY

Liquid chromatography (*2.2.29*).

Test solution. To 2.000 g of the powdered herbal drug (355) (*2.9.12*) add 60 mL of *anhydrous ethanol R*, 15 mL of *water R* and 0.2 g of *potassium hydroxide R*. Extract on a water-bath under a reflux condenser for 4 h. Allow to cool and filter into a 100 mL volumetric flask. Rinse the extraction flask and the residue in the filter with 3 quantities, each of 10 mL, of *anhydrous ethanol R* and add the rinsings to the volumetric flask. Dilute to 100.0 mL with *anhydrous ethanol R*. Introduce 25.0 mL of this solution into a round-bottomed flask fitted to a rotary evaporator and evaporate to dryness. Dissolve the residue in 10 mL of *butanol R* and add 3 mL of *hydrochloric acid R1* and 8 mL of *water R*. Heat on a water-bath under a reflux condenser for 1 h. Allow to cool and transfer to a 100 mL volumetric flask. Rinse the round-bottomed flask with 3 quantities, each of 20 mL, of *methanol R*. Add the rinsings to the volumetric flask and dilute to 100.0 mL with *methanol R*.

Reference solution. Dissolve 5.0 mg of *ruscogenins CRS* in 100 mL of *methanol R*.

Column:

- *size*: *l* = 0.25 m, Ø = 4.6 mm;
- *stationary phase*: *octadecylsilyl silica gel for chromatography R* (5 µm).

Mobile phase:

- *mobile phase A*: *water R*;
- *mobile phase B*: *acetonitrile R1*;

Time (min)	Mobile phase A (per cent *V/V*)	Mobile phase B (per cent *V/V*)
0 - 25	40	60
25 - 27	40 → 0	60 → 100
27 - 37	0	100

Flow rate: 1.2 mL/min.

Detection: spectrophotometer at 203 nm.

Injection: 20 µL.

Identification of peaks: use the chromatogram supplied with *ruscogenins CRS* and the chromatogram obtained with the reference solution to identify the peaks due to neoruscogenin and ruscogenin.

Relative retention with reference to neoruscogenin (retention time = about 16 min): ruscogenin = about 1.2.

System suitability: reference solution:

- *resolution*: minimum 1.5 between the peaks due to neoruscogenin and ruscogenin.

Calculate the percentage content of sapogenins, expressed as ruscogenins (neoruscogenin and ruscogenin), using the following expression:

$$\frac{A_1 \times m_2 \times 4 \times p_1}{A_2 \times m_1} + \frac{A_3 \times m_2 \times 4 \times p_2}{A_4 \times m_1}$$

A_1 = area of the peak due to ruscogenin in the chromatogram obtained with the test solution;

A_2 = area of the peak due to ruscogenin in the chromatogram obtained with the reference solution;

A_3 = area of the peak due to neoruscogenin in the chromatogram obtained with the test solution;

A_4 = area of the peak due to neoruscogenin in the chromatogram obtained with the reference solution;

m_1 = mass of the herbal drug to be examined used to prepare the test solution, in grams;

m_2 = mass of *ruscogenins CRS* used to prepare the reference solution, in grams;

p_1 = percentage content of ruscogenin in *ruscogenins CRS*;

p_2 = percentage content of neoruscogenin in *ruscogenins CRS*.

01/2011:1297

CALENDULA FLOWER

Calendulae flos

DEFINITION

Whole or cut, dried, and fully opened flowers that have been detached from the receptacle of the cultivated, double-flowered varieties of *Calendula officinalis* L.

Content: minimum 0.4 per cent of flavonoids, expressed as hyperoside ($C_{21}H_{20}O_{12}$; M_r 464.4) (dried drug).

IDENTIFICATION

A. The ligulate florets consist of a yellow or orange-yellow ligule, about 3-5 mm wide and about 7 mm in the middle part, with a 3-toothed apex and a hairy, partly sickle-shaped, yellowish-brown or orange-brown tube with a projecting style and a bifid stigma occasionally with a partly bent yellowish-brown or orange-brown ovary. The tubular florets, about 5 mm long, are present and consist of the yellow, orange-red or reddish-violet 5-lobed corolla and the yellowish-brown or orange-brown tube, hairy in its lower part, mostly with a partly bent yellowish-brown or orange-brown ovary.

B. Reduce to a powder (355) (*2.9.12*). The powder is yellowish-brown. Examine under a microscope using *chloral hydrate solution R*. The powder shows the following diagnostic characters (Figure 1297.-1): fragments of epidermises of the corolla [C, F, K] containing light yellow oil droplets, some with fairly large anomocytic stomata (*2.8.3*) [Fa, Ka]; covering trichomes biseriate, multicellular and conical [G], usually fragmented, and glandular trichomes with a multicellular stalk [E], very abundant on the base of the corolla [D]; fragments of parenchyma of the corolla [B] containing prisms and very small cluster crystals of calcium oxalate [Ba, Da] and small vessels [Bb]; spherical pollen grains up to about 40 µm in diameter

Herbal drugs

with a sharply spiny exine and 3 germinal pores [A, J]; occasional fragments of the stigmas with short, bulbous papillae [H].

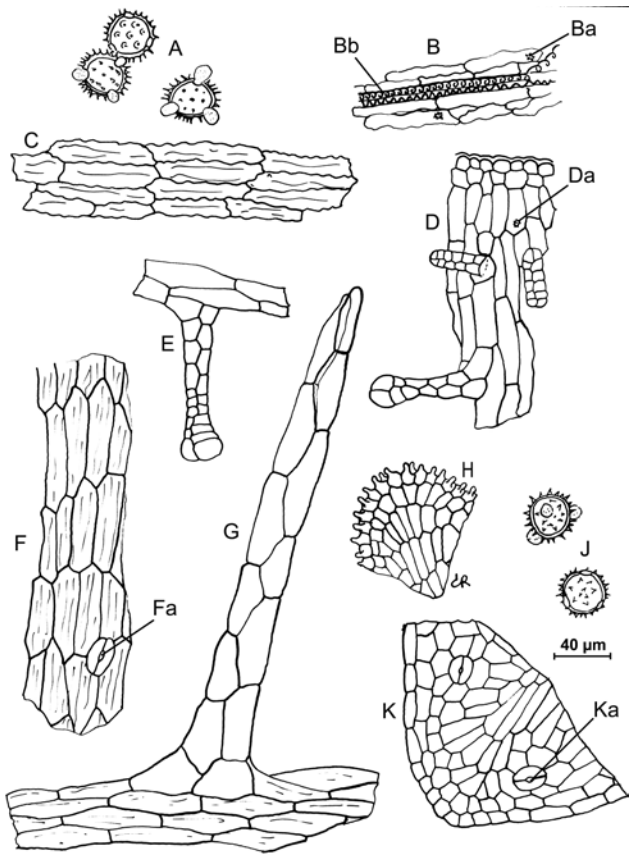

Figure 1297.-1. – *Illustration for identification test B of powdered herbal drug of calendula flower*

C. Thin-layer chromatography (*2.2.27*).

Test solution. Mix 1.0 g of the powdered herbal drug (500) (*2.9.12*) and 10 mL of *methanol R* and heat on a water-bath under a reflux condenser for 10 min. Cool and filter.

Reference solution. Dissolve 1.0 mg of *caffeic acid R*, 1.0 mg of *chlorogenic acid R* and 2.5 mg of *rutin R* in 10 mL of *methanol R*.

Plate: *TLC silica gel plate R*.

Mobile phase: *anhydrous formic acid R*, *water R*, *ethyl acetate R* (10:10:80 *V/V/V*).

Application: 20 µL of the test solution and 10 µL of the reference solution, as bands.

Development: over a path of 10 cm.

Drying: at 100-105 °C.

Detection: spray the still-warm plate with a 10 g/L solution of *diphenylboric acid aminoethyl ester R* in *methanol R* and then spray with a 50 g/L solution of *macrogol 400 R* in *methanol R*; allow to dry in air for 30 min and examine in ultraviolet light at 365 nm.

Results: the chromatogram obtained with the reference solution shows in the lower part a yellowish-brown fluorescent zone (rutin), in the middle part a light bluish fluorescent zone (chlorogenic acid) and in the upper part a light bluish fluorescent zone (caffeic acid). The chromatogram obtained with the test solution shows a yellowish-brown fluorescent zone corresponding in position to the zone due to rutin in the chromatogram obtained with the reference solution, below and directly above it, it shows a yellowish-green fluorescent zone and a light bluish fluorescent zone corresponding to the zone due to chlorogenic acid in the chromatogram obtained with the reference solution, a yellowish-green fluorescent zone above it and a light bluish fluorescent zone shortly below the zone due to caffeic acid in the chromatogram obtained with the reference solution. Furthermore, other zones may be present in the chromatogram obtained with the test solution.

TESTS

Foreign matter (*2.8.2*): maximum 5 per cent of bracts and maximum 2 per cent of other foreign matter.

Loss on drying (*2.2.32*): maximum 12.0 per cent, determined on 1.000 g of the powdered herbal drug (500) (*2.9.12*) by drying in an oven at 105 °C for 2 h.

Total ash (*2.4.16*): maximum 10.0 per cent.

ASSAY

Stock solution. Into a 100 mL round-bottomed flask introduce 0.800 g of the powdered herbal drug (500) (*2.9.12*), 1 mL of a 5 g/L solution of *hexamethylenetetramine R*, 7 mL of *hydrochloric acid R1* and 20 mL of *acetone R*. Boil the mixture under a reflux condenser for 30 min. Filter the liquid through a plug of absorbent cotton into a 100 mL volumetric flask. Add the absorbent cotton to the residue in the round-bottomed flask and extract with 2 quantities, each of 20 mL, of *acetone R*, each time boiling under a reflux condenser for 10 min. Allow to cool to room temperature, filter the liquid through a plug of absorbent cotton, then filter the combined acetone solution through a filter-paper into the volumetric flask, and dilute to 100.0 mL with *acetone R* by rinsing the flask and filter. Introduce 20.0 mL of this solution into a separating funnel, add 20 mL of *water R* and extract the mixture with 1 quantity of 15 mL and then with 3 quantities, each of 10 mL, of *ethyl acetate R*. Combine the ethyl acetate extracts in a separating funnel, rinse with 2 quantities, each of 50 mL, of *water R*, filter the extract over 10 g of *anhydrous sodium sulfate R* into a 50 mL volumetric flask and dilute to 50.0 mL with *ethyl acetate R*.

Test solution. To 10.0 mL of the stock solution add 1 mL of *aluminium chloride reagent R* and dilute to 25.0 mL with a 5 per cent *V/V* solution of *glacial acetic acid R* in *methanol R*.

Compensation liquid. Dilute 10.0 mL of the stock solution to 25.0 mL with a 5 per cent *V/V* solution of *glacial acetic acid R* in *methanol R*.

Measure the absorbance (*2.2.25*) of the test solution after 30 min, by comparison with the compensation liquid at 425 nm.

Calculate the percentage content of flavonoids, expressed as hyperoside, using the following expression:

$$\frac{A \times 1.25}{m}$$

i.e. taking the specific absorbance of hyperoside to be 500.

A = absorbance at 425 nm;

m = mass of the herbal drug to be examined, in grams.

01/2014:1859

CAPSICUM

Capsici fructus

DEFINITION

Dried ripe fruits of *Capsicum annuum* L. var. *minimum* (Miller) Heiser and small-fruited varieties of *Capsicum frutescens* L.

Content: minimum 0.4 per cent of total capsaicinoids, expressed as capsaicin ($C_{18}H_{27}NO_3$; M_r 305.4) (dried drug).

CHARACTERS

Extremely pungent taste.

Herbal drugs

IDENTIFICATION

A. The fruit is yellowish-orange or reddish-brown, oblong conical with an obtuse apex, about 1-3 cm long and up to 1 cm in diameter at the widest part, occasionally attached to a 5-toothed inferior calyx and a straight peduncle. Pericarp somewhat shrivelled, glabrous, enclosing about 10-20 flat, reniform seeds 3-4 mm long, either loose or attached to a reddish dissepiment.

B. Microscopic examination (*2.8.23*). The powder is orange. Examine under a microscope using *chloral hydrate solution R*. The powder shows the following diagnostic characters (Figure 1859.-1): fragments of the epicarp, in surface view, with cells often arranged in rows of 5 to 7 [E], thick-walled when close to the peduncle [B] and with a cuticle uniformly striated [A]; fragments of the pericarp, in transverse section [D], showing the epicarp covered by a thick cuticle [Da] and parenchymatous cells frequently containing droplets of red oil, occasionally containing microsphenoidal crystals of calcium oxalate [Db]; fragments of endocarp [C] with characteristic island groups of sclerenchymatous cells [Ca], the groups being separated by thin-walled parenchymatous cells [Cb]; fragments of the seeds having an episperm composed of large, greenish-yellow, sinuous-walled sclereids with thin outer walls and strongly and unevenly thickened radial and inner walls which are conspicuously pitted [G]; endosperm parenchymatous cells with drops of oil and aleurone grains, 3-6 µm in diameter [H]; occasional fragments from the calyx having an outer epidermis with anisocytic stomata (*2.8.3*) [J], an inner epidermis with no stomata and many glandular trichomes with uniseriate stalks and multicellular heads [N], and a mesophyll [L] with many idioblasts containing prisms of calcium oxalate [La] or microsphenoidal crystals of calcium oxalate [Lb]; prisms [K] or clusters [M] of calcium oxalate, isolated; annularly and spirally thickened vessels [F].

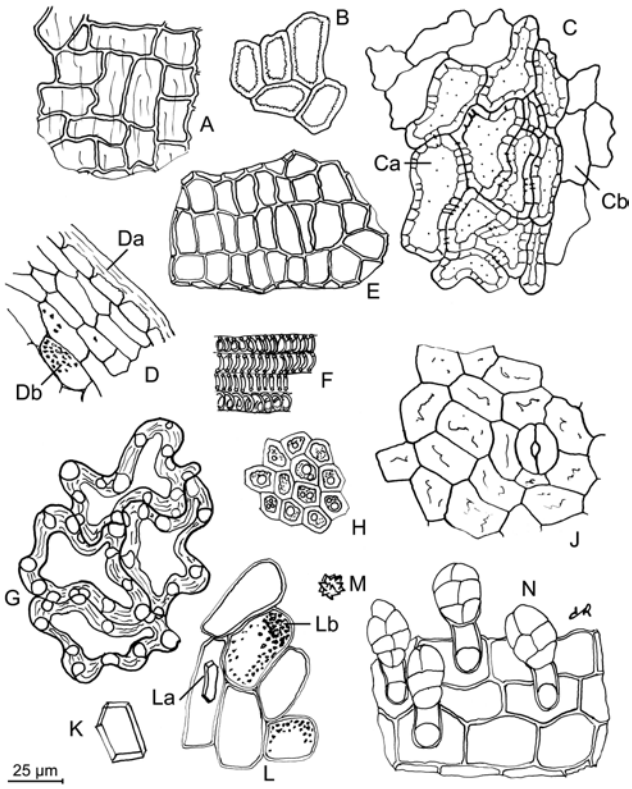

Figure 1859.-1. – *Illustration for identification test B of powdered herbal drug of capsicum*

C. Thin-layer chromatography (*2.2.27*).

Test solution. To 0.50 g of the powdered herbal drug (500) (*2.9.12*) add 5.0 mL of *ether R*, shake for 5 min and filter.

Reference solution. Dissolve 2 mg of *capsaicin R* and 2 mg of *dihydrocapsaicin R* in 5.0 mL of *ether R*.

Plate: *TLC octadecylsilyl silica gel plate R*.

Mobile phase: *water R*, *methanol R* (20:80 *V/V*).

Application: 20 µL as bands.

Development: over a path of 12 cm.

Drying: in air.

Detection: treat with a 5 g/L solution of *dichloroquinonechlorimide R* in *methanol R*, and expose to ammonia vapour until blue zones appear. Examine in daylight.

Results: see below the sequence of zones present in the chromatograms obtained with the reference solution and the test solution. Furthermore, other zones may be present in the chromatogram obtained with the test solution.

Top of the plate	
———	———
Capsaicin: a blue zone	A blue zone (capsaicin)
Dihydrocapsaicin: a blue zone	A blue zone (dihydrocapsaicin)
———	———
Reference solution	**Test solution**

TESTS

Nonivamide. Liquid chromatography (*2.2.29*).

Test solution. To 2.5 g of the powdered herbal drug (500) (*2.9.12*) add 100 mL of *methanol R*. Allow to macerate for 30 min. Place in an ultrasonic bath for 15 min. Filter into a 100 mL volumetric flask, rinse the flask and filter with *methanol R*, then dilute to 100.0 mL with the same solvent.

Reference solution (a). Dissolve 10.0 mg of *capsaicin CRS* and 2.0 mg of *nonivamide CRS* in *methanol R* and dilute to 50.0 mL with the same solvent.

Reference solution (b). Dissolve 4.0 mg of *nonivamide CRS* in *methanol R* and dilute to 100.0 mL with the same solvent.

Column:

- *size*: *l* = 0.25 m, Ø = 4.6 mm;
- *stationary phase*: *base-deactivated end-capped phenylsilyl silica gel for chromatography R* (5 µm);
- *temperature*: 30 °C.

Mobile phase: *acetonitrile R1*, 1 g/L solution of *phosphoric acid R* (40:60 *V/V*).

Flow rate: 1.0 mL/min.

Detection: spectrophotometer at 225 nm.

Injection: 10 µL.

Run time: 1.2 times the retention time of dihydrocapsaicin.

Elution order: nordihydrocapsaicin, nonivamide, capsaicin, dihydrocapsaicin.

System suitability: reference solution (a):

- *resolution*: minimum 1.5 between the peaks due to nonivamide and capsaicin.

Calculate the percentage content of nonivamide with reference to the total capsaicinoid content, using the following expression:

$$\frac{A_1 \times m_2 \times p_1 \times 100}{A_2 \times m_1 \times C}$$

A_1 = area of the peak due to nonivamide in the chromatogram obtained with the test solution;

A_2 = area of the peak due to nonivamide in the chromatogram obtained with reference solution (b);

m_1 = mass of the herbal drug to be examined used to prepare the test solution, in grams;

Herbal drugs

m_2 = mass of *nonivamide CRS* used to prepare reference solution (b), in grams;

p_1 = percentage content of nonivamide in *nonivamide CRS*;

C = percentage content of total capsaicinoids, as determined in the assay.

Limit:

– *nonivamide*: maximum 5.0 per cent of the total capsaicinoid content.

Foreign matter (*2.8.2*). Fruits of *C. annuum* L. var. *longum* (Sendtn.) are absent.

Loss on drying (*2.2.32*): maximum 11.0 per cent, determined on 1.000 g of the powdered herbal drug (500) (*2.9.12*) by drying in an oven at 105 °C for 2 h.

Total ash (*2.4.16*): maximum 10.0 per cent.

ASSAY

Liquid chromatography (*2.2.29*) as described in the test for nonivamide.

Calculate the percentage content of total capsaicinoids (C), expressed as capsaicin, using the following expression:

$$\frac{(A_3 + A_5 + A_6) \times m_4 \times p_2 \times 2}{A_4 \times m_3}$$

A_3 = area of the peak due to capsaicin in the chromatogram obtained with the test solution;

A_4 = area of the peak due to capsaicin in the chromatogram obtained with reference solution (a);

A_5 = area of the peak due to dihydrocapsaicin in the chromatogram obtained with the test solution;

A_6 = area of the peak due to nordihydrocapsaicin in the chromatogram obtained with the test solution;

m_3 = mass of the herbal drug to be examined used to prepare the test solution, in grams;

m_4 = mass of *capsaicin CRS* used to prepare reference solution (a), in grams;

p_2 = percentage content of capsaicin in *capsaicin CRS*.

01/2014:2336

CAPSICUM OLEORESIN, REFINED AND STANDARDISED

Capsici oleoresina raffinata et normata

DEFINITION

Refined and standardised oleoresin produced from *Capsicum (1859)*.

Content: 12.0 per cent to 18.0 per cent *m/m* of total capsaicinoids, expressed as capsaicin ($C_{18}H_{27}NO_3$; M_r 305.4).

PRODUCTION

The oleoresin is produced from the herbal drug by an appropriate procedure, using ethanol (minimum 90 per cent *V/V*).

CHARACTERS

Appearance: red or brown mobile extract.

IDENTIFICATION

Thin-layer chromatography (*2.2.27*).

Test solution. Dissolve 50 mg of the oleoresin to be examined in 5 mL of *ether R*.

Reference solution. Dissolve 2 mg of *capsaicin R* and 2 mg of *dihydrocapsaicin R* in 5 mL of *ether R*.

Plate: *TLC octadecylsilyl silica gel plate R* (5-40 µm) [or *TLC octadecylsilyl silica gel plate R* (2-10 µm)].

Mobile phase: *water R*, *methanol R* (20:80 *V/V*).

Application: 20 µL [or 2 µL] as bands of 15 mm [or 8 mm].

Development: over a path of 12 cm [or 6 cm].

Drying: in air.

Detection: treat with a 0.25 g/L solution of *dichloroquinonechlorimide R* in *ethyl acetate R*, expose to ammonia vapour until blue zones appear. Examine in daylight.

Results: see below the sequence of zones present in the chromatograms obtained with the reference solution and the test solution. Furthermore, other zones may be present in the chromatogram obtained with the test solution.

Top of the plate	
Capsaicin: a blue zone	A blue zone (capsaicin)
Dihydrocapsaicin: a blue zone	A faint blue zone (dihydrocapsaicin)
Reference solution	**Test solution**

TESTS

Nonivamide. Liquid chromatography (*2.2.29*).

Test solution. Dissolve 0.300 g of the oleoresin to be examined in 60 mL of *methanol R* and dilute to 100.0 mL with the same solvent.

Reference solution (a). Dissolve 10.0 mg of *capsaicin CRS* and 2.0 mg of *nonivamide CRS* in *methanol R* and dilute to 50.0 mL with the same solvent.

Reference solution (b). Dissolve 4.0 mg of *nonivamide CRS* in *methanol R* and dilute to 100.0 mL with the same solvent.

Column:

– *size*: *l* = 0.25 m, Ø = 4.6 mm;

– *stationary phase*: *base-deactivated end-capped phenylsilyl silica gel for chromatography R* (5 µm);

– *temperature*: 30 °C.

Mobile phase: *acetonitrile R1*, 1 g/L solution of *phosphoric acid R* (40:60 *V/V*).

Flow rate: 1.0 mL/min.

Detection: spectrophotometer at 225 nm.

Injection: 10 µL.

Run time: 1.2 times the retention time of dihydrocapsaicin.

Elution order: nordihydrocapsaicin, nonivamide, capsaicin, dihydrocapsaicin.

Relative retention with reference to capsaicin (retention time = about 19 min): nordihydrocapsaicin = about 0.9; nonivamide = about 0.95; dihydrocapsaicin = about 1.3.

System suitability: reference solution (a):

– *resolution*: minimum 1.5 between the peaks due to nonivamide and capsaicin.

Calculate the percentage content of nonivamide with reference to the total capsaicinoid content, using the following expression:

$$\frac{A_1 \times m_2 \times p_1 \times 100}{A_2 \times m_1 \times C}$$

A_1 = area of the peak due to nonivamide in the chromatogram obtained with the test solution;

A_2 = area of the peak due to nonivamide in the chromatogram obtained with reference solution (b);

m_1 = mass of the oleoresin to be examined used to prepare the test solution, in grams;

Herbal drugs

m_2 = mass of *nonivamide CRS* used to prepare reference solution (b), in grams;

p_1 = percentage content of nonivamide in *nonivamide CRS*;

C = percentage content of total capsaicinoids, as determined in the assay.

Limit:

– *nonivamide*: maximum 5.0 per cent of the total capsaicinoid content.

Water (*2.5.12*): maximum 8.0 per cent, determined on 5.00 g.

ASSAY

Liquid chromatography (*2.2.29*) as described in the test for nonivamide.

Calculate the percentage content of total capsaicinoids (C), expressed as capsaicin, using the following expression:

$$\frac{(A_3 + A_5 + A_6) \times m_3 \times p_2 \times 2}{A_4 \times m_1}$$

A_3 = area of the peak due to capsaicin in the chromatogram obtained with the test solution;

A_4 = area of the peak due to capsaicin in the chromatogram obtained with reference solution (a);

A_5 = area of the peak due to dihydrocapsaicin in the chromatogram obtained with the test solution;

A_6 = area of the peak due to nordihydrocapsaicin in the chromatogram obtained with the test solution;

m_1 = mass of the oleoresin to be examined used to prepare the test solution, in grams;

m_3 = mass of *capsaicin CRS* used to prepare reference solution (a), in grams;

p_2 = percentage content of capsaicin in *capsaicin CRS*.

01/2014:2529

CAPSICUM SOFT EXTRACT, STANDARDISED

Capsici extractum spissum normatum

DEFINITION

Standardised soft extract produced from *Capsicum (1859)*.

Content: 2.0 per cent to 2.4 per cent of total capsaicinoids, expressed as capsaicin ($C_{18}H_{27}NO_3$; M_r 305.4).

PRODUCTION

The extract is produced from the herbal drug by a suitable procedure using ethanol (80 per cent *V/V*).

The content of total capsaicinoids in the extract is determined and adjusted, if necessary, to the value specified by adding a suitable inert excipient, for example liquid glucose.

CHARACTERS

Appearance: reddish-brown, glutinous matter.

IDENTIFICATION

Thin-layer chromatography (*2.2.27*).

Test solution. To 0.25 g of the extract to be examined add 10 mL of a mixture of *water R* and *propanol R* (40:60 *V/V*). Shake for 5 min. Filter, if necessary.

Reference solution. Dissolve 2 mg of *capsaicin R* and 1 mg of *dihydrocapsaicin R* in 5 mL of *methanol R*.

Plate: *TLC octadecylsilyl silica gel plate R* (5-40 µm) [or *TLC octadecylsilyl silica gel plate R* (2-10 µm)].

Mobile phase: *water R*, *methanol R* (20:80 *V/V*).

Application: 20 µL [or 2 µL] as bands of 15 mm [or 8 mm].

Development: over a path of 12 cm [or 6 cm].

Drying: in air.

Detection: treat with a 0.25 g/L solution of *dichloroquinonechlorimide R* in *ethyl acetate R*, expose to ammonia vapour until blue zones appear. Examine in daylight.

Results: see below the sequence of zones present in the chromatograms obtained with the reference solution and the test solution. Furthermore, other zones may be present in the chromatogram obtained with the test solution.

Top of the plate	
Capsaicin: a blue zone	A blue zone (capsaicin)
Dihydrocapsaicin: a blue zone	A blue zone (dihydrocapsaicin)
Reference solution	**Test solution**

TESTS

Nonivamide. Liquid chromatography (*2.2.29*).

Test solution. Stir the extract to be examined until homogeneous, heating, if necessary, to not more than 60 °C. Disperse 0.350 g of the homogeneous extract in 35 mL of a mixture of *water R* and *propanol R* (40:60 *V/V*). Shake for 30 min and dilute to 50.0 mL with *propanol R*. Dilute 25.0 mL of the solution to 50.0 mL with the mobile phase and filter through a membrane filter (nominal pore size 0.45 µm).

Reference solution (a). Dissolve 2.0 mg of *nonivamide CRS* in the mobile phase and dilute to 25.0 mL with the mobile phase (solution A). Dissolve 8.0 mg of *capsaicin CRS* in a mixture of 5.0 mL of solution A and 45 mL of the mobile phase. Dilute to 100.0 mL with the mobile phase.

Reference solution (b). Dissolve 8.0 mg of *nonivamide CRS* in the mobile phase and dilute to 100.0 mL with the mobile phase. Dilute 5.0 mL of the solution to 100.0 mL with the mobile phase.

Column:

– *size*: *l* = 0.25 m, Ø = 4.6 mm;

– *stationary phase*: *base-deactivated end-capped phenylsilyl silica gel for chromatography R* (5 µm);

– *temperature*: 30 °C.

Mobile phase: *acetonitrile R1*, 1 g/L solution of *phosphoric acid R* (40:60 *V/V*).

Flow rate: 1.0 mL/min.

Detection: spectrophotometer at 225 nm.

Injection: 10 µL.

Run time: 1.2 times the retention time of dihydrocapsaicin.

Elution order: nordihydrocapsaicin, nonivamide, capsaicin, dihydrocapsaicin.

Relative retention with reference to capsaicin (retention time = about 19 min): nordihydrocapsaicin = about 0.9; nonivamide = about 0.95; dihydrocapsaicin = about 1.3.

System suitability: reference solution (a):

– *resolution*: minimum 1.5 between the peaks due to nonivamide and capsaicin.

Herbal drugs

Calculate the percentage content of nonivamide with reference to the total capsaicinoid content, using the following expression:

$$\frac{A_1 \times m_2 \times p_1 \times 5}{A_2 \times m_1 \times C}$$

A_1 = area of the peak due to nonivamide in the chromatogram obtained with the test solution;

A_2 = area of the peak due to nonivamide in the chromatogram obtained with reference solution (b);

m_1 = mass of the extract to be examined used to prepare the test solution, in grams;

m_2 = mass of *nonivamide CRS* used to prepare reference solution (b), in grams;

p_1 = percentage content of nonivamide in *nonivamide CRS*;

C = percentage content of total capsaicinoids, as determined in the assay.

Limit:

- *nonivamide*: maximum 5.0 per cent of the total capsaicinoid content.

Dry residue (*2.8.16*): minimum 70.0 per cent *m/m*, determined on 2.00 g.

ASSAY

Liquid chromatography (*2.2.29*) as described in the test for nonivamide.

Calculate the percentage content of total capsaicinoids (C), expressed as capsaicin, using the following expression:

$$\frac{(A_3 + A_5 + A_6) \times m_3 \times p_2}{A_4 \times m_1}$$

A_3 = area of the peak due to capsaicin in the chromatogram obtained with the test solution;

A_4 = area of the peak due to capsaicin in the chromatogram obtained with reference solution (a);

A_5 = area of the peak due to dihydrocapsaicin in the chromatogram obtained with the test solution;

A_6 = area of the peak due to nordihydrocapsaicin in the chromatogram obtained with the test solution;

m_1 = mass of the extract to be examined used to prepare the test solution, in grams;

m_3 = mass of *capsaicin CRS* used to prepare reference solution (a), in grams;

p_2 = percentage content of capsaicin in *capsaicin CRS*.

01/2014:2337

CAPSICUM TINCTURE, STANDARDISED

Capsici tinctura normata

DEFINITION

Standardised tincture produced from *Capsicum (1859)* or *Refined and standardised capsicum oleoresin (2336)*.

Content: 90 per cent to 110 per cent of the nominal content of total capsaicinoids, expressed as capsaicin ($C_{18}H_{27}NO_3$; M_r 305.4), stated on the label, which is between 0.020 per cent *m/m* and 0.060 per cent *m/m*.

PRODUCTION

The tincture is produced from the herbal drug or oleoresin and ethanol (70 per cent *V/V* to 85 per cent *V/V*) by an appropriate procedure.

CHARACTERS

Appearance: yellowish-orange or reddish-orange liquid.

IDENTIFICATION

Thin-layer chromatography (*2.2.27*).

Test solution. Shake 10 mL of the tincture to be examined with 10 mL of *hexane R*. Allow to separate and use the lower layer.

Reference solution. Dissolve 1 mg of *capsaicin R* and 1 mg of *dihydrocapsaicin R* in 5 mL of *ether R*.

Plate: *TLC octadecylsilyl silica gel plate R* (5-40 µm) [or *TLC octadecylsilyl silica gel plate R* (2-10 µm)].

Mobile phase: *water R*, *methanol R* (20:80 *V/V*).

Application: 20 µL [or 2 µL] as bands of 15 mm [or 8 mm].

Development: over a path of 12 cm [or 6 cm].

Drying: in air.

Detection: treat with a 0.25 g/L solution of *dichloroquinonechlorimide R* in *ethyl acetate R*, expose to ammonia vapour until blue zones appear. Examine in daylight.

Results: see below the sequence of zones present in the chromatograms obtained with the reference solution and the test solution. Furthermore, other zones may be present in the chromatogram obtained with the test solution.

Top of the plate	
Capsaicin: a blue zone	A blue zone (capsaicin)
Dihydrocapsaicin: a blue zone	A faint blue zone (dihydrocapsaicin)
Reference solution	**Test solution**

TESTS

Nonivamide. Liquid chromatography (*2.2.29*).

Test solution. Dilute 50.0 g of the tincture to be examined to 100.0 mL with *methanol R*.

Reference solution (a). Dissolve 10.0 mg of *capsaicin CRS* and 2.0 mg of *nonivamide CRS* in *methanol R* and dilute to 50.0 mL with the same solvent.

Reference solution (b). Dissolve 4.0 mg of *nonivamide CRS* in *methanol R* and dilute to 100.0 mL with the same solvent.

Column:

- *size*: *l* = 0.25 m, Ø = 4.6 mm;
- *stationary phase*: *base-deactivated end-capped phenylsilyl silica gel for chromatography R* (5 µm);
- *temperature*: 30 °C.

Mobile phase: *acetonitrile R1*, 1 g/L solution of *phosphoric acid R* (40:60 *V/V*).

Flow rate: 1.0 mL/min.

Detection: spectrophotometer at 225 nm.

Injection: 10 µL.

Run time: 1.2 times the rentention time of dihydrocapsaicin.

Elution order: nordihydrocapsaicin, nonivamide, capsaicin, dihydrocapsaicin.

System suitability: reference solution (a):

- *resolution*: minimum 1.5 between the peaks due to nonivamide and capsaicin.

Herbal drugs

Calculate the percentage content of nonivamide with reference to the total capsaicinoid content, using the following expression:

$$\frac{A_1 \times m_2 \times p_1 \times 100}{A_2 \times m_1 \times C}$$

A_1 = area of the peak due to nonivamide in the chromatogram obtained with the test solution;

A_2 = area of the peak due to nonivamide in the chromatogram obtained with reference solution (b);

m_1 = mass of the tincture to be examined used to prepare the test solution, in grams;

m_2 = mass of *nonivamide CRS* used to prepare reference solution (b), in grams;

p_1 = percentage content of nonivamide in *nonivamide CRS*;

C = percentage content of total capsaicinoids, as determined in the assay.

Limit:

– *nonivamide*: maximum 5.0 per cent of the total capsaicinoid content.

Ethanol (*2.9.10*): 95 per cent to 105 per cent of the content stated on the label.

Methanol and 2-propanol (*2.9.11*): maximum 0.05 per cent *V/V* of methanol and maximum 0.05 per cent *V/V* of 2-propanol.

ASSAY

Liquid chromatography (*2.2.29*) as described in the test for nonivamide.

Calculate the percentage content of total capsaicinoids (C), expressed as capsaicin, using the following expression:

$$\frac{(A_3 + A_5 + A_6) \times m_4 \times p_2 \times 2}{A_4 \times m_3}$$

A_3 = area of the peak due to capsaicin in the chromatogram obtained with the test solution;

A_4 = area of the peak due to capsaicin in the chromatogram obtained with reference solution (a);

A_5 = area of the peak due to dihydrocapsaicin in the chromatogram obtained with the test solution;

A_6 = area of the peak due to nordihydrocapsaicin in the chromatogram obtained with the test solution;

m_3 = mass of the tincture to be examined used to prepare the test solution, in grams;

m_4 = mass of *capsaicin CRS* used to prepare reference solution (a), in grams;

p_2 = percentage content of capsaicin in *capsaicin CRS*.

01/2008:1080

CARAWAY FRUIT

Carvi fructus

DEFINITION

Whole, dry mericarp of *Carum carvi* L.

Content: minimum 30 mL/kg of essential oil (anhydrous drug).

CHARACTERS

Odour reminiscent of carvone.

IDENTIFICATION

A. The fruit is a cremocarp of almost cylindrical shape. It is generally 3-6.5 mm long and 1-1.5 mm wide. The mericarps, usually free, are greyish-brown or brown, glabrous, mostly sickle-shaped, with both ends sharply terminated. Each bears 5 prominent narrow ridges. When cut transversely the profile shows an almost regular pentagon and 4 vittae on the dorsal surface and 2 on the commissural surface may be seen with a lens.

B. Reduce to a powder (355) (*2.9.12*). The powder is yellowish-brown. Examine under a microscope using *chloral hydrate solution R*. The powder shows the following diagnostic characters: fragments of the secretory cells composed of yellowish-brown or brown, thin-walled, polygonal secretory cells, frequently associated with a layer of thin-walled, transversely elongated cells, 8-12 µm wide; fragments of the epicarp with thick-walled cells and occasional anomocytic stomata (*2.8.3*); numerous endosperm fragments containing aleurone grains, droplets of fatty oil and microcrystals of calcium oxalate in rosette formation; spiral vessels accompanied by sclerenchymatous fibres; rarely some fibre bundles from the carpophore; groups of rectangular to sub-rectangular sclereids from the mesocarp with moderately thickened and pitted walls may be present.

C. Thin-layer chromatography (*2.2.27*).

Test solution. Shake 0.5 g of the powdered herbal drug (710) (*2.9.12*) with 5.0 mL of *ethyl acetate R* for 2-3 min. Filter over 2 g of *anhydrous sodium sulfate R*.

Reference solution. Dissolve 2 µL of *carvone R* and 5 µL of *olive oil R* in 1.0 mL of *ethyl acetate R*.

Plate: *TLC silica gel plate R*.

Mobile phase: *ethyl acetate R*, *toluene R* (5:95 *V/V*).

Application: 20 µL of the test solution and 10 µL of the reference solution, as bands.

Development: over a path of 10 cm.

Drying: in air.

Detection A: examine in ultraviolet light at 254 nm.

Results A: the chromatograms obtained with the test solution and with the reference solution show a quenching zone (carvone) in the central part against a light background.

Detection B: spray with *anisaldehyde solution R* and, while observing, heat at 100-105 °C for 2-4 min; examine in daylight.

Results B: the zones due to carvone are dark orange-brown; the chromatogram obtained with the test solution shows above the zone due to carvone a violet zone similar in position and colour to the zone due to triglycerides of olive oil in the chromatogram obtained with the reference solution; the chromatogram obtained with the test solution shows close to the solvent front a weak violet zone due to terpene hydrocarbons and in the lower part some weak, mostly violet-greyish and brownish zones.

TESTS

Water (*2.2.13*): maximum 100 mL/kg, determined on 10.0 g of the powdered herbal drug.

Total ash (*2.4.16*): maximum 7.0 per cent.

ASSAY

Essential oil (*2.8.12*). Use 10.0 g of drug reduced to a powder (710) (*2.9.12*) immediately before the determination, a 500 mL round-bottomed flask, 200 mL of *water R* as the distillation liquid, and 0.50 mL of *xylene R* in the graduated tube. Distil at a rate of 2-3 mL/min for 90 min.

01/2008:1817

CARAWAY OIL

Carvi aetheroleum

DEFINITION

Oil obtained by steam distillation from the dry fruits of *Carum carvi* L.

CHARACTERS

Appearance: clear, colourless or yellow liquid.

IDENTIFICATION

First identification: B.

Second identification: A.

A. Thin-layer chromatography (*2.2.27*).

Test solution. Dissolve 40 µL of the substance to be examined in 1.0 mL of *toluene R*.

Reference solution. Dissolve 10 µL of *carvone R* and 5 µL of *carveol R* in 1.0 mL of *toluene R*.

Plate: *TLC silica gel F_{254} plate R* (5-40 µm) [or *TLC silica gel plate R* (2-10 µm)].

Mobile phase: *ethyl acetate R*, *toluene R* (5:95 *V/V*).

Application: 10 µL [or 2 µL] as bands.

Development: over a path of 10 cm [or 5 cm].

Drying: in air.

Detection A: examine in ultraviolet light at 254 nm.

Results A: see below the sequence of zones present in the chromatograms obtained with the reference solution and the test solution. Furthermore, other zones may be present in the chromatogram obtained with the test solution.

Top of the plate	
Carvone: a quenching zone	A quenching zone (carvone)
Reference solution	**Test solution**

Detection B: spray with *anisaldehyde solution R* and heat at 100-105 °C for 5-10 min. Examine immediately in daylight.

Results B: see below the sequence of zones present in the chromatograms obtained with the reference solution and the test solution. Furthermore, several zones of weak intensity are present, particularly in the lower third, in the chromatogram obtained with the test solution.

Top of the plate	
	A reddish-violet zone
	A reddish-violet zone
Carvone: a red to orange-brown zone	An intense red to orange-brown zone (carvone)
Carveol: a reddish-violet zone	A reddish-violet zone (carveol)
	A violet-blue zone
Reference solution	**Test solution**

B. Examine the chromatograms obtained in the test for chromatographic profile.

Results: the characteristic peaks in the chromatogram obtained with the test solution are similar in retention time to those in the chromatogram obtained with the reference solution.

TESTS

Relative density (*2.2.5*): 0.904 to 0.920.

Refractive index (*2.2.6*): 1.484 to 1.490.

Optical rotation (*2.2.7*): + 65° to + 81°.

Acid value (*2.5.1*): maximum 1.0, determined on 5.00 g.

Chromatographic profile. Gas chromatography (*2.2.28*): use the normalisation procedure.

Test solution. Dissolve 0.200 g of the substance to be examined in *heptane R* and dilute to 10.0 mL with the same solvent.

Reference solution (a). Dissolve 5 µL of *β-myrcene R*, 80 µL of *limonene R*, 5 µL of *dihydrocarvone R*, 100 µL of *carvone R* and 5 µL of *carveol R* in *heptane R* and dilute to 10.0 mL with the same solvent.

Reference solution (b). Dissolve 10 µL of *carvone R* in *heptane R* and dilute to 10 mL with the same solvent. Dilute 0.1 mL of this solution to 10 mL with *heptane R*.

Column:

- *material*: fused silica,
- *size*: *l* = 30 m, Ø = 0.53 mm,
- *stationary phase*: *macrogol 20 000 R*, (film thickness 1 µm).

Carrier gas: *helium for chromatography R*.

Flow rate: 1.5 mL/min.

Split ratio: 1:50.

Temperature:

	Time (min)	Temperature (°C)
Column	0 - 5	60
	5 - 68	60 → 250
	68 - 75	250
Injection port		250
Detector		260

Detection: flame ionisation.

Injection: 1.0 µL.

Elution order: order indicated in the composition of reference solution (a). Record the retention times of these substances.

System suitability: reference solution (a):

- *resolution*: minimum 4.5 between the peaks due to β-myrcene and limonene.

Using the retention times determined from the chromatogram obtained with the reference solution, locate the components of the reference solution in the chromatogram obtained with the test solution.

Limits:

- *β-myrcene*: 0.1 per cent to 1.0 per cent,
- *limonene*: 30.0 per cent to 45.0 per cent,
- *trans-dihydrocarvone*: maximum 2.5 per cent,
- *carvone*: 50.0 per cent to 65.0 per cent,
- *trans-carveol*: maximum 2.5 per cent.
- *disregard limit*: the area of the peak in the chromatogram obtained with reference solution (b).

Chiral purity. Gas chromatography (*2.2.28*).

Test solution. Dissolve 20 mg of the substance to be examined in *heptane R* and dilute to 10.0 mL with the same solvent.

Reference solution. Dissolve 10 mg of *(–)-carvone R* and 10 mg of *carvone R1* in *heptane R* and dilute to 10.0 mL with the same solvent.

Column:

- *material*: fused silica,
- *size*: *l* = 30 m, Ø = 0.25 mm,
- *stationary phase*: *modified β-cyclodextrin for chiral chromatography R1* (film thickness 0.25 µm).

Carrier gas: *helium for chromatography R*.

Herbal drugs

Flow rate: 2.0 mL/min.

Split ratio: 1:30.

Temperature:

	Time (min)	Temperature (°C)
Column	0 - 80	50 → 170
Injection port		230
Detector		230

Detection: flame ionisation.

Injection: 1 µL.

System suitability: reference solution:

– *resolution*: minimum 2.4 between the peaks due to (–)-carvone (1st peak) and carvone R1 (2nd peak).

Calculate the percentage content of the (–)-carvone from the following expression:

$$\frac{A_1}{A_1 + A_2} \times 100$$

A_1 = area of the peak due to (–)-carvone,

A_2 = area of the peak due to carvone R1.

Limit:

– *(–)-carvone*: maximum 1 per cent.

STORAGE

At a temperature not exceeding 25 °C.

04/2011:0105

CASCARA

Rhamni purshianae cortex

DEFINITION

Dried, whole or fragmented bark of *Rhamnus purshiana* DC. (syn. *Frangula purshiana* (DC.) A.Gray).

Content: minimum 8.0 per cent of hydroxyanthracene glycosides of which minimum 60 per cent consists of cascarosides, both expressed as cascaroside A ($C_{27}H_{32}O_{14}$; M_r 580.5) (dried drug).

IDENTIFICATION

A. The bark occurs in slightly channelled or nearly flat pieces, usually 1-5 mm in thickness, usually varying greatly in length and width. The outer surface is grey or dark greyish-brown and shows occasional lenticels that are orientated transversally. It is usually more or less completely covered by a whitish coat of lichens, epiphytic moss and foliaceous liverwort. The inner surface is yellow or reddish-brown or almost black with fine longitudinal striations; it turns red when treated with alkali. The yellow fracture is short and granular in the outer part and somewhat fibrous in the inner part.

B. Microscopic examination (*2.8.23*). The powder is yellowish-brown. Examine under a microscope using *chloral hydrate solution R*. The powder shows the following diagnostic characters (Figure 0105.-1): bundles [A] of partly lignified phloem fibres [Aa], accompanied by crystal sheaths containing prisms of calcium oxalate [Ab] and sometimes including medullary rays [Ac]; isolated sclereids [G] or groups of sclereids [B] accompanied by crystal sheaths [Ba]; isolated cluster crystals [C] or prisms [E] of calcium oxalate; parenchymatous cells [F, H] containing a yellow substance that becomes deep red when treated with alkali, sometimes accompanied by cells containing cluster crystals of calcium oxalate [Ha]; cork cells, in surface view [D] or in transverse section [J], associated with parenchyma, some cells of which contain cluster crystals of calcium oxalate [Ja]; frequently epiphytes [K], which may be liverworts, entire or in fragments, having a lamina 1 cell thick without a midrib and composed of isodiametric cells, or leaves of mosses, having a lamina 1 cell thick composed of elongated cells and possessing a midrib several cells thick.

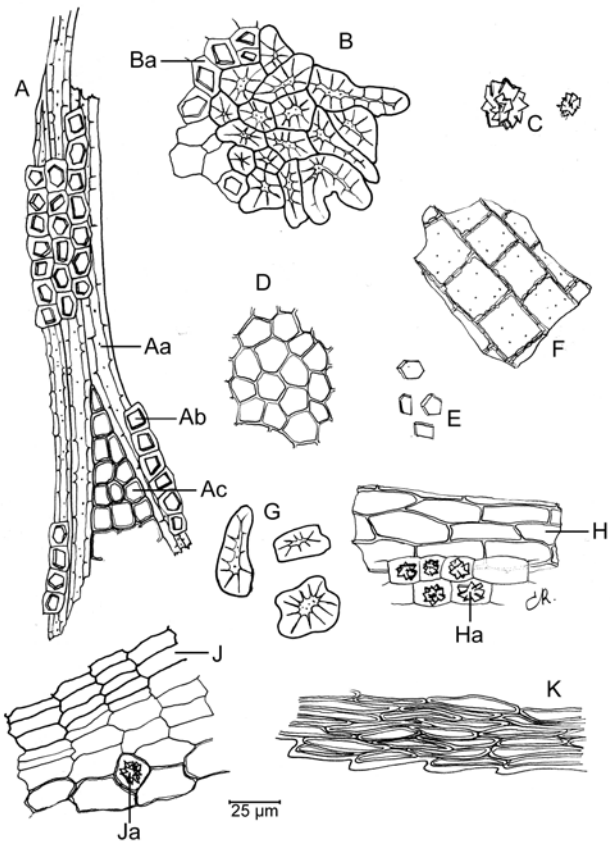

Figure 0105.-1. – *Illustration for identification test B of powdered herbal drug of cascara*

C. Examine the chromatograms obtained in test A for Other species of *Rhamnus*; anthrones.

Results: the chromatogram obtained with the test solution shows several reddish-brown zones with different intensities: there are 4 faint zones, 3 being situated at about the mid-point of the chromatogram and 1 in the lower third and there is a strong zone in the upper third of the chromatogram. Examine in ultraviolet light at 365 nm. The chromatogram obtained with the test solution shows several zones with the same fluorescence, situated above and particularly below (cascarosides) that due to barbaloin in the chromatogram obtained with the reference solution.

D. Heat 0.2 g of the powdered herbal drug (180) (*2.9.12*) with 50 mL of *water R* on a water-bath for 15 min. Allow to cool and filter. To 10 mL of the filtrate add 20 mL of *hydrochloric acid R1* and heat on a water-bath for 15 min. Allow to cool, transfer to a separating funnel and shake with 3 quantities, each of 20 mL, of *ether R*. Reserve the aqueous layer (solution A). Combine the 3 ether extracts and shake with 10 mL of *dilute ammonia R2*. The aqueous layer becomes reddish-violet. Transfer solution A to a small flask, add 5 g of *ferric chloride R* and heat on a water-bath for 30 min. Allow to cool, transfer to a separating funnel and shake with 15 mL of *ether R*. Wash the ether layer with 10 mL of *water R*, discard the aqueous layer and shake the ether layer with 5 mL of *dilute ammonia R2*. A red colour develops in the aqueous layer.

TESTS

Other species of *Rhamnus*; anthrones. Thin-layer chromatography (*2.2.27*).

Test solution. To 0.5 g of the powdered herbal drug (180) (*2.9.12*) add 5 mL of *ethanol (70 per cent V/V) R* and heat to boiling. Cool and centrifuge. Decant the supernatant immediately and use within 30 min.

Reference solution. Dissolve 20 mg of *barbaloin R* in *ethanol (70 per cent V/V) R* and dilute to 10 mL with the same solvent.

Plates: *TLC silica gel plate R* (2 plates).

Mobile phase: *water R*, *methanol R*, *ethyl acetate R* (13:17:100 *V/V/V*).

A. *Application*: 10 µL as bands.

Development: over a path of 10 cm.

Drying: in air for 5 min.

Detection: spray with about 10 mL of a 50 g/L solution of *potassium hydroxide R* in *ethanol (50 per cent V/V) R* and heat at 100-105 °C for 15 min; examine immediately after heating.

Results: the chromatogram obtained with the reference solution shows, in the central part, a reddish-brown zone due to barbaloin; examine in ultraviolet light at 365 nm; the zone due to barbaloin shows intense yellowish-brown fluorescence; in the chromatogram with the test solution, no zone with orange-brown fluorescence is seen between the zone due to barbaloin and the zones due to cascarosides.

B. *Application*: 10 µL of the test solution, as a band.

Development: over a path of 10 cm.

Drying: in air for not more than 5 min.

Detection: spray immediately with a 5 g/L solution of *nitrotetrazolium blue R* in *methanol R* and examine immediately.

Results: no violet or greyish-blue zones appear.

Foreign matter (*2.8.2*): maximum 1 per cent.

Loss on drying (*2.2.32*): maximum 10.0 per cent, determined on 1.000 g of the powdered herbal drug (180) (*2.9.12*) by drying in an oven at 105 °C for 2 h.

Total ash (*2.4.16*): maximum 7.0 per cent.

ASSAY

Carry out the assay in 24 h, protected from bright light.

Stir 1.00 g of the powdered herbal drug (180) (*2.9.12*) into 100 mL of boiling *water R* and continue boiling and stirring for 5 min. Allow to cool, dilute to 100.0 mL with *water R*, shake, filter and discard the first 20 mL of filtrate. Transfer 10.0 mL of the filtrate to a separating funnel, add 0.1 mL of *1 M hydrochloric acid* and shake with 2 quantities, each of 20 mL, of a mixture of 1 volume of *ether R* and 3 volumes of *hexane R*. Wash the combined organic extracts with 5 mL of *water R*, discard the organic layer and return the rinsings to the aqueous layer. Shake the combined aqueous layers with 4 quantities, each of 30 mL, of *ethyl acetate R* freshly saturated with *water R* (to 150 mL of *ethyl acetate R* add 15 mL of *water R*, shake for 3 min and allow to stand) on each occasion allowing separation to take place until the organic layer is clear. Combine the ethyl acetate extracts. Use the aqueous layer for the assay for cascarosides and the organic layer for the assay for hydroxyanthracene glycosides other than cascarosides.

Hydroxyanthracene glycosides other than cascarosides. Transfer the organic layer to a suitable flask and remove the solvent by distillation, evaporating almost to dryness. Dissolve the residue in 0.3-0.5 mL of *methanol R* and transfer to a volumetric flask, rinsing the 1st flask with warm *water R* and adding the rinsings to the methanolic solution. Allow to cool and dilute to 50.0 mL with *water R*. Transfer 20.0 mL of this solution to a 100 mL round-bottomed flask with a ground-glass neck and containing 2 g of *ferric chloride R* and 12 mL of *hydrochloric acid R*. Attach a reflux condenser and place the flask in a water-bath so that the level of the water is above that of the liquid in the flask and heat for 4 h. Allow to cool, transfer the solution to a separating funnel and rinse the flask successively with 3-4 mL of *1 M sodium hydroxide* and 3-4 mL of *water R*, adding the rinsings to the separating funnel. Shake the contents of the separating funnel with 3 quantities, each of 30 mL, of a mixture of 1 volume of *ether R* and 3 volumes of *hexane R*. Wash the combined organic layers with 2 quantities, each of 10 mL, of *water R* and discard the rinsings. Dilute the organic layer to 100.0 mL with the mixture of ether and hexane. Take 20.0 mL, evaporate carefully to dryness on a water-bath and dissolve the residue in 10.0 mL of a 5 g/L solution of *magnesium acetate R* in *methanol R*. Measure the absorbance (*2.2.25*) at 440 nm and 515 nm using *methanol R* as the compensation liquid. If the ratio of the absorbance at 515 nm to that at 440 nm is less than 2.4, the assay is invalid.

Calculate the percentage content of hydroxyanthracene glycosides other than cascarosides, expressed as cascaroside A, using the following expression:

$$\frac{A \times 6.95}{m}$$

i.e. taking the specific absorbance to be 180.

A = absorbance at 515 nm;

m = mass of the substance to be examined, in grams.

Cascarosides. Dilute the aqueous layer to 50.0 mL with *water R*. Treat 20.0 mL of this solution as described above in the assay of hydroxyanthracene glycosides other than cascarosides. Measure the absorbance (*2.2.25*) of the test solution at 440 nm and 515 nm. If the ratio of the absorbance at 515 nm to that at 440 nm is less than 2.7, the assay is invalid.

Calculate the percentage content of cascarosides, expressed as cascaroside A, using the following expression:

$$\frac{A \times 6.95}{m}$$

i.e. taking the specific absorbance to be 180.

A = absorbance at 515 nm;

m = mass of the substance to be examined, in grams.

01/2008:1844

CASCARA DRY EXTRACT, STANDARDISED

Rhamni purshianae extractum siccum normatum

DEFINITION

Standardised dry extract obtained from *Cascara (0105)*.

Content: 90 per cent to 110 per cent of the nominal content of hydroxyanthracene glycosides, expressed as cascaroside A ($C_{27}H_{32}O_{14}$; M_r 580.5), stated on the label; minimum 60 per cent of the hydroxyanthracene glycosides are cascarosides, expressed as cascaroside A. The nominal content of hydroxyanthracene glycosides is within the range 8.0 per cent to 25.0 per cent *m/m* (dried extract).

PRODUCTION

The extract is produced from the herbal drug by an appropriate procedure using either boiling water or a hydroalcoholic solvent at least equivalent in strength to ethanol (60 per cent *V/V*).

CHARACTERS

Appearance: brown, free-flowing powder.

Herbal drugs

IDENTIFICATION

Thin-layer chromatography (*2.2.27*).

Test solution. To 0.2 g of the extract to be examined add 5 mL of *ethanol (70 per cent V/V) R* and heat to boiling. Cool and centrifuge. Decant the supernatant solution immediately and use within 30 min.

Reference solution. Dissolve 20 mg of *barbaloin R* and 2 mg of *emodin R* in *ethanol (70 per cent V/V) R* and dilute to 10 mL with the same solvent.

Plate: *TLC silica gel plate R* (5-40 µm) [or *TLC silica gel plate R* (2-10 µm)].

Mobile phase: *water R*, *methanol R*, *ethyl acetate R* (13:17:100 *V/V/V*).

Application: 10 µL [or 2 µL] as bands.

Development: over a path of 10 cm [or 6 cm].

Drying: in air for 5 min.

Detection: spray with a 50 g/L solution of *potassium hydroxide R* in *ethanol (50 per cent V/V) R* and heat to 100-105 °C for 15 min; examine in ultraviolet light at 365 nm.

Results: see below the sequence of zones present in the chromatograms obtained with the reference solution and the test solution. Furthermore, other zones may be present in the chromatogram obtained with the test solution.

Top of the plate	
Emodin: a red fluorescent zone	A faint red fluorescent zone
Barbaloin: a yellowish-brown fluorescent zone	A yellowish-brown fluorescent zone A blue fluorescent zone
	An intense yellowish-brown fluorescent zone 3 yellowish-brown fluorescent zones
Reference solution	**Test solution**

TESTS

Loss on drying (*2.8.17*): maximum 5.0 per cent.

ASSAY

Carry out the assay within 24 h, protected from bright light.

To 0.500 g of the extract to be examined add 80 mL of *ethanol (70 per cent V/V) R*. Shake, and allow to stand in the dark for at least 8 h. Dilute to 100.0 mL with *ethanol (70 per cent V/V) R*. Shake and filter, discarding the first 20 mL of filtrate. Transfer 10.0 mL of the filtrate to a separating funnel, add 0.1 mL of *1 M hydrochloric acid* and shake with 2 quantities, each of 20 mL, of a mixture of 1 volume of *ether R* and 3 volumes of *hexane R*. Wash the combined organic extracts with 5 mL of *water R*. Discard the organic layer and return the rinsings to the hydroalcoholic layer. Shake with 4 quantities, each of 30 mL, of *ethyl acetate R* freshly saturated with *water R* (prepared as follows: to 150 mL of *ethyl acetate R* add 15 mL of *water R*, shake for 3 min and allow to stand), on each occasion allowing the layers to separate until the organic layer is clear. Combine the ethyl acetate extracts. Use the aqueous layer for the assay of cascarosides and the organic layer for the assay of hydroxyanthracene glycosides other than cascarosides.

Hydroxyanthracene glycosides other than cascarosides. Transfer the organic layer to a round-bottomed flask and remove the solvent by distillation, evaporating almost to dryness. Dissolve the residue in 0.5 mL of *methanol R*, add 10 mL of *water R* at 40 °C and transfer to a 50 mL volumetric flask, rinsing the round-bottomed flask with *water R* at 40 °C and adding the rinsings to the hydromethanolic solution. Allow to cool and dilute to 50.0 mL with *water R*. Transfer 20.0 mL of the solution to a 100 mL round-bottomed flask with a ground-glass neck containing 2 g of *ferric chloride R* and 12 mL of *hydrochloric acid R*. Attach a reflux condenser and place the flask in a water-bath so that the level of the water is above that of the liquid in the flask and heat for 4 h. Allow to cool, transfer the solution to a separating funnel and rinse the flask successively with 4 mL of *1 M sodium hydroxide* and 4 mL of *water R*, adding the rinsings to the separating funnel. Shake the contents of the separating funnel with 3 quantities, each of 30 mL, of a mixture of 1 volume of *ether R* and 3 volumes of *hexane R*. Wash the combined organic layers with 2 quantities, each of 10 mL, of *water R* and discard the rinsings. Dilute the organic layer to 100.0 mL with a mixture of 1 volume of *ether R* and 3 volumes of *hexane R*. Take 20.0 mL of the solution, evaporate carefully to dryness on a water-bath and dissolve the residue in 10.0 mL of a 5 g/L solution of *magnesium acetate R* in *methanol R*. Measure the absorbance (*2.2.25*) at 440 nm and 515 nm, using *methanol R* as the compensation liquid. If the ratio of the absorbance at 515 nm to that at 440 nm is less than 2.4, the assay is invalid.

Calculate the percentage content of hydroxyanthracene glycosides other than cascarosides, expressed as cascaroside A, using the following expression:

$$\frac{A \times 6.95}{m}$$

i.e. taking the specific absorbance to be 180.

A = absorbance at 515 nm;

m = mass of the substance to be examined, in grams.

Cascarosides. Dilute the aqueous layer to 50.0 mL with *water R*. Treat 20.0 mL of this solution as described above in the assay of hydroxyanthracene glycosides other than cascarosides. Measure the absorbance (*2.2.25*) at 440 nm and 515 nm. If the ratio of the absorbance at 515 nm to that at 440 nm is less than 2.7, the assay is invalid.

Calculate the percentage content of cascarosides, expressed as cascaroside A, using the following expression:

$$\frac{A \times 6.95}{m}$$

i.e. taking the specific absorbance to be 180.

A = absorbance at 515 nm;

m = mass of the substance to be examined, in grams.

LABELLING

The label states the nominal content of hydroxyanthracene glycosides, expressed as cascaroside A.

01/2008:1496
corrected 7.0

CASSIA OIL

Cinnamomi cassiae aetheroleum

DEFINITION

Essential oil obtained by steam distillation of the leaves and young branches of *Cinnamomum cassia* Blume (*C. aromaticum* Nees).

CHARACTERS

Appearance: clear, mobile, yellow or reddish-brown liquid.

Characteristic odour reminiscent of cinnamic aldehyde.

IDENTIFICATION

First identification: B.

Herbal drugs

Second identification: A.

A. Thin-layer chromatography (*2.2.27*).

Test solution. Dissolve 0.5 mL of the essential essential oil to be examined in *acetone R* and dilute to 10 mL with the same solvent.

Reference solution. Dissolve 50 µL of *trans-cinnamic aldehyde R*, 10 µL of *eugenol R* and 50 mg of *coumarin R* in *acetone R* and dilute to 10 mL with the same solvent.

Plate: *TLC silica gel plate R*.

Mobile phase: *methanol R*, *toluene R* (10:90 *V/V*).

Application: 10 µL as bands.

Development: over a path of 15 cm.

Drying: in air.

Detection A: examine in ultraviolet light at 365 nm.

Results A: the zone of blue fluorescence in the chromatogram obtained with the test solution is similar in position and colour to the zone in the chromatogram obtained with the reference solution (coumarin).

Detection B: spray with *anisaldehyde solution R*; examine in daylight while heating at 100-105 °C for 5-10 min.

Results B: the chromatogram obtained with the reference solution shows in its upper part a violet zone (eugenol) and above this zone a greenish-blue zone (*trans*-cinnamic aldehyde). The chromatogram obtained with the test solution shows a zone similar in position and colour to the zone due to *trans*-cinnamic aldehyde in the chromatogram obtained with the reference solution and may show a very faint zone due to eugenol. Other faint zones are present.

B. Examine the chromatograms obtained in the test for chromatographic profile.

Results: the principal peaks in the chromatogram obtained with the test solution are similar in retention time to those in the chromatogram obtained with the reference solution. Eugenol may be absent from the chromatogram obtained with the test solution.

TESTS

Relative density (*2.2.5*): 1.052 to 1.070.

Refractive index (*2.2.6*): 1.600 to 1.614.

Optical rotation (*2.2.7*): − 1° to + 1°.

Chromatographic profile. Gas chromatography (*2.2.28*): use the normalisation procedure.

Test solution. The essential oil to be examined.

Reference solution. Dissolve 100 µL of *trans-cinnamic aldehyde R*, 10 µL of *cinnamyl acetate R*, 10 µL of *eugenol R*, 10 µL of *trans-2-methoxycinnamaldehyde R* and 20 mg of *coumarin R* in 1 mL of *acetone R*.

Column:

- *material*: fused silica;
- *size*: *l* = 60 m, Ø = about 0.25 mm;
- *stationary phase*: bonded *macrogol 20 000 R*.

Carrier gas: *helium for chromatography R*.

Flow rate: 1.5 mL/min.

Split ratio: 1:100.

Temperature:

	Time (min)	Temperature (°C)
Column	0 - 10	60
	10 - 75	60 → 190
	75 - 160	190
Injection port		200
Detector		240

Detection: flame ionisation.

Injection: 0.2 µL.

Elution order: order indicated in the composition of the reference solution, depending on the operating conditions and the state of the column, coumarin may elute before or after *trans*-2-methoxycinnamaldehyde; record the retention times of these substances.

System suitability: reference solution:

- *resolution*: minimum 1.5 between the peaks due to *trans*-2-methoxycinnamaldehyde and coumarin.

Identification of components: using the retention times determined from the chromatogram obtained with the reference solution, locate the components of the reference solution in the chromatogram obtained with the test solution.

Determine the percentage content of each of these components. The percentages are within the following ranges:

- *trans-cinnamic aldehyde*: 70 per cent to 90 per cent;
- *cinnamyl acetate*: 1.0 per cent to 6.0 per cent;
- *eugenol*: maximum 0.5 per cent;
- *trans-2-methoxycinnamaldehyde*: 3.0 per cent to 15 per cent;
- *coumarin*: 1.5 per cent to 4.0 per cent.

STORAGE

Protected from heat.

01/2008:1301
corrected 6.0

CENTAURY

Centaurii herba

DEFINITION

Whole or fragmented dried flowering aerial parts of *Centaurium erythraea* Rafn s. l. including *C. majus* (H. et L.) Zeltner and *C. suffruticosum* (Griseb.) Ronn. (syn.: *Erythraea centaurium* Persoon; *C. umbellatum* Gilibert; *C. minus* Gars.).

CHARACTERS

Bitter taste.

IDENTIFICATION

A. The hollow cylindrical, light green to dark brown stem has longitudinal ridges, and is branched only in its upper part. The sessile leaves are entire, decussately arranged, and have an ovate to lanceolate lamina, up to about 3 cm long. Both surfaces are glabrous and green to brownish-green. The inflorescence is diaxially branched. The tubular calyx is green and has 5 lanceolate, acuminate teeth. The corolla consists of a whitish tube divided into 5 elongated lanceolate pink to reddish lobes, about 5-8 mm long. 5 stamens are present attached to the top of the corolla tube. The ovary is superior and has a short style, a broad bifid stigma and numerous ovules. Cylindrical capsules, about 7-10 mm long, with small brown markedly rough seeds are frequently present.

B. Reduce to a powder (355) (*2.9.12*). The powder is greenish-yellow or brownish. Examine under a microscope, using *chloral hydrate solution R*. The powder shows the following diagnostic characters: fragments from the stem with lignified groups of fibres associated with narrow vessels, tracheidal vessels occasional vessels with spiral thickening; pitted parenchyma of the pith and medullary rays; fragments of leaf lamina with sinuous epidermal cells and striated cuticle, especially over the margins and surrounding the stomata; numerous stomata, mainly anisocytic (*2.8.3*); fragments of the palisade mesophyll, each cell containing a single prism crystal or, less frequently, a cluster crystal of calcium oxalate; fragments of calyx and corolla, those of the calyx with straight-walled epidermal cells, those of the inner epidermis of the corolla with obtuse papillae and radially striated cuticle; parts of

Herbal drugs

the endothecium with reticulate or ridge-shaped wall thickenings; triangularly rounded or elliptical, yellow pollen grains, about 30 µm in diameter, with a distinctly pitted exine and 3 germinal pores; fragments of the wall of the fruit capsule composed of crossed layers of fusiform cells; oil droplets from the seeds, fragments of the epidermis of the testa showing large, brown reticulations and a pitted surface.

C. Thin-layer chromatography (*2.2.27*).

Test solution. To 1.0 g of the powdered herbal drug (355) (*2.9.12*) add 25 mL of *methanol R*, shake for 15 min and filter. Evaporate the filtrate to dryness under reduced pressure and at a temperature not exceeding 50 °C. Take up the residue with small quantities of *methanol R* so as to obtain 5 mL of solution, which may contain a sediment.

Reference solution. Dissolve 1 mg of *rutin R* and 1 mg of *swertiamarin R* in *methanol R* and dilute to 1 mL with the same solvent.

Plate: *TLC silica gel F_{254} plate R* (5-40 µm) [or *TLC silica gel F_{254} plate R* (2-10 µm)].

Mobile phase: *water R*, *anhydrous formic acid R*, *ethyl formate R* (4:8:88 *V/V/V*).

Application: 10 µL [or 5 µL] as bands.

Development: in an unsaturated tank over a path of 12 cm [or 6 cm].

Drying: in air.

Detection A: examine in ultraviolet light at 254 nm.

Results A: see below the sequence of the zones present in the chromatograms obtained with the reference solution and the test solution. Furthermore, other less intense quenching zones may be present in the chromatogram obtained with the test solution.

Top of the plate	
Swertiamarin: a quenching zone Rutin: a quenching zone	A prominent quenching zone (swertiamarin)
Reference solution	**Test solution**

Detection B: spray with *anisaldehyde solution R* and heat at 100-105 °C for 5-10 min. Examine in daylight.

Results B: see below the sequence of the zones present in the chromatograms obtained with the reference solution and the test solution. Furthermore, other less intense coloured zones may be present in the chromatogram obtained with the test solution.

Top of the plate	
Swertiamarin: a brown zone Rutin: a yellow zone	A brown zone (swertiamarin) A brownish-grey zone A yellow zone A grey zone
Reference solution	**Test solution**

TESTS

Foreign matter (*2.8.2*): maximum 3 per cent.

Bitterness value (*2.8.15*): minimum 2000.

Loss on drying (*2.2.32*): maximum 10.0 per cent, determined on 1.000 g of the powdered herbal drug (355) (*2.9.12*) by drying in an oven at 105 °C for 2 h.

Total ash (*2.4.16*): maximum 6.0 per cent.

01/2008:1498
corrected 6.0

CENTELLA

Centellae asiaticae herba

DEFINITION

Dried, fragmented aerial parts of *Centella asiatica* (L.) Urban.

Content: minimum 6.0 per cent of total triterpenoid derivatives, expressed as asiaticoside ($C_{48}H_{78}O_{19}$; M_r 959.15) (dried drug).

CHARACTERS

The leaves are very variable in size; the petiole is usually 5-10, sometimes 15, times longer than the lamina, which is 10-40 mm long and 20-40 mm, sometimes up to 70 mm, wide.

IDENTIFICATION

A. The leaves are alternate, sometimes grouped together at the nodes, reniform or orbicular or oblong-elliptic and have palmate nervation, usually with 7 veins, and a crenate margin. Young leaves show a few trichomes on the lower surface while adult leaves are glabrous. The inflorescence, if present, is a single umbel which usually consists of 3 flowers, rarely 2 or 4; the flowers are very small (about 2 mm) pentamerous and have an inferior ovary; the fruit, a brownish-grey, orbicular cremocarp, up to 5 mm long, is very flattened laterally and has 7-9 prominent curved ridges.

B. Reduce the drug to a powder (355) (*2.9.12*). The powder is greenish-grey. Examine under a microscope using *chloral hydrate solution R*. The powder shows the following diagnostic characters: numerous fragments of leaf epidermis with polygonal cells having an irregularly striated cuticle, and paracytic stomata (*2.8.3*) that are more numerous in the lower epidermis; fragments of petiole epidermis with elongated cells; uniseriate, long, flexuous unicellular covering trichomes, occasionally multicellular; young leaves; spiral vessels; resiniferous canals; calcium oxalate prisms and macles up to 40 µm in diameter; bundles of narrow septate fibres from the stem; fragments of the fruit: layers of wide cells in a parquetry arrangement, annular vessels, parenchyma cells containing simple or compound starch granules.

C. Thin-layer chromatography (*2.2.27*).

Test solution. To 5.0 g of the powdered herbal drug (355) (*2.9.12*) add 50 mL of *ethanol (30 per cent V/V) R*; heat to boiling under a reflux condenser and centrifuge.

Reference solution. Dissolve 5 mg of *asiaticoside R* in *methanol R* and dilute to 10 mL with the same solvent.

Plate: *TLC silica gel G plate R*.

Mobile phase: *acetic acid R*, *formic acid R*, *water R*, *ethyl acetate R* (11:11:27:100 *V/V/V/V*).

Application: 10 µL, as bands.

Development: over a path of 15 cm.

Drying: in air.

Detection: spray with *anisaldehyde solution R* and heat at 100-105 °C; examine in daylight.

Results: the chromatograms obtained with the reference solution and the test solution show in the lower third a greenish-blue zone (asiaticoside). The chromatogram obtained with the test solution shows also below this zone a violet zone (madecassoside); near the solvent front it shows a light blue zone (asiatic acid) and just below a

Herbal drugs

pinkish-violet zone (madecassic acid); in the lower half it shows brown, grey and brownish-green zones between the point of application and the zone due to madecassoside, and other brownish-yellow or light yellow zones above the zone due to asiaticoside.

TESTS

Foreign matter (*2.8.2*): maximum 7 per cent, of which maximum 5 per cent of underground organs and maximum 2 per cent of other foreign matter.

Loss on drying (*2.2.32*): maximum 10.0 per cent, determined on 1.000 g of the powdered herbal drug (355) (*2.9.12*) by drying in an oven at 105 °C for 2 h.

Total ash (*2.4.16*): maximum 12.0 per cent.

ASSAY

Liquid chromatography (*2.2.29*).

Test solution. Place 5.0 g of the powdered herbal drug (355) (*2.9.12*) in a cellulose fingerstall in a continuous extraction apparatus (Soxhlet type). Add 100 mL of *methanol R* and heat for 8 h. Cool and dilute the extract to 100.0 mL with *methanol R*. Filter through a 0.45 µm filter. Dilute 2.0 mL of the filtrate to 20.0 mL with *methanol R*.

Reference solution. Dissolve 20.0 mg of *asiaticoside R* in *methanol R*, if necessary using sonication, and dilute to 20.0 mL with the same solvent. Dilute 2.0 mL of this solution to 100.0 mL with *methanol R*.

Column:

- *size*: *l* = 0.25 m, Ø = 4 mm;
- *stationary phase*: *octadecylsilyl silica gel for chromatography R* (5 µm).

Phase mobile:

- *mobile phase A*: *acetonitrile for chromatography R*;
- *mobile phase B*: dilute 3 mL of *phosphoric acid R* to 1000 mL with *water R*;

Time (min)	Mobile phase A (per cent *V/V*)	Mobile phase B (per cent *V/V*)
0 - 65	22	78
65 - 66	55	45
66 - 76	95	5
76 - 85	22	78

Flow rate: 1.0 mL/min.

Detection: spectrophotometer at 200 nm.

Injection: 20 µL.

Relative retention with reference to the solvent: madecassoside = about 5.8; asiaticoside = about 8.1; madecassic acid = about 17.6; asiatic acid = about 21.7.

Calculate the response factor R_F of asiaticoside using the following expression:

$$\frac{A_1 \times V_1 \times 100}{m_1 \times HPLC_P}$$

A_1 = area of the peak due to asiaticoside in the chromatogram obtained with the reference solution;

V_1 = volume of the reference solution, in millilitres;

m_1 = mass of asiaticoside in the reference solution, in milligrams;

$HPLC_P$ = purity determined for asiaticoside.

Calculate the mean response factor ($\overline{RF}$) for asiaticoside using the following expression:

$$\frac{\sum_{i=1}^{N} RF_i}{N}$$

$\sum_{i=1}^{N} RF_i$ = sum of response factors of asiaticoside for the chromatograms obtained with the reference solution;

N = number of injections of reference solution (N = 4, at least).

Calculate the percentage content of total triterpenoid derivatives, expressed as asiaticoside, using the following expression:

$$\frac{V}{m}\left[\frac{A + (B \times 1.017) + (C \times 0.526) + (D \times 0.509)}{\overline{RF}}\right]$$

V = volume of the test solution, in millilitres;

m = mass of the substance to be examined in the test solution, in milligrams;

A = area of the peak due to asiaticoside in the chromatogram obtained with the test solution;

B = area of the peak due to madecassoside in the chromatogram obtained with the test solution;

C = area of the peak due to madecassic acid in the chromatogram obtained with the test solution;

D = area of the peak due to asiatic acid in the chromatogram obtained with the test solution;

$\overline{RF}$ = mean response factor of asiaticoside.

01/2008:0380
corrected 6.0

CHAMOMILE FLOWER, ROMAN

Chamomillae romanae flos

DEFINITION

Dried flower-heads of the cultivated double variety of *Chamaemelum nobile* (L.) All. (*Anthemis nobilis* L.).

Content: minimum 7 mL/kg of essential oil (dried drug).

CHARACTERS

The flower-heads are white or yellowish-grey, composed of solitary hemispherical capitula, made up of a solid conical receptacle bearing the florets, each subtended by a transparent small palea.

Strong and characteristic odour.

IDENTIFICATION

A. The capitula have a diameter of 8-20 mm; the receptacle is solid; the base of the receptacle is surrounded by an involucre consisting of 2-3 rows of compact and imbricated bracts with scarious margins. Most florets are ligulate, but a few pale yellow tubular florets occur in the central region. Ligulate florets are white, dull, lanceolate and reflexed with a dark brown, inferior ovary, a filiform style and a bifid stigma; tubular florets have a five-toothed corolla tube, 5 syngenesious, epipetalous stamens and a gynoecium similar to that of the ligulate florets.

B. Separate the capitulum into its different parts. Examine under a microscope using *chloral hydrate solution R*. All parts of the flower-heads are covered with numerous small yellow glistening glandular trichomes. The involucral bracts and paleae have epidermal cells in longitudinal rows, sclerified at the base and they are covered with conical trichomes, about 500 µm long, each composed of 3-4 very short base cells and a long, bent, terminal cell about 20 µm

Herbal drugs

wide. The corolla of the ligulate flowers consists of papillary cells with cuticular striations. The ovaries of both kinds of florets have at their base a sclerous ring consisting of a single row of cells. The receptacle and the ovaries contain small clusters of calcium oxalate. The pollen grains have a diameter of about 35 µm and are rounded or triangular with 3 germinal pores and a spiny exine.

C. Thin-layer chromatography (*2.2.27*).

Test solution. To 0.5 g of the powdered herbal drug (710) (*2.9.12*) add 10 mL of *methanol R* and heat with shaking in a water-bath at 60 °C for 5 min. Allow to cool and filter.

Reference solution. Dissolve 2.5 mg of *apigenin R* and 2.5 mg of *apigenin 7-glucoside R* in 10 mL of *methanol R*.

Plate: *TLC silica gel plate R*.

Mobile phase: *glacial acetic acid R*, *water R*, *butanol R* (17:17:66 *V/V/V*).

Application: 10 µL, as bands.

Development: over a path of 10 cm.

Drying: at 100-105 °C for 5 min.

Detection: spray the warm plate with a 10 g/L solution of *diphenylboric acid aminoethyl ester R* in *methanol R*, using about 10 mL for a plate 200 mm square; subsequently spray with the same volume of a 50 g/L solution of *macrogol 400 R* in *methanol R*; allow to stand for about 30 min and examine in ultraviolet light at 365 nm.

Results: the chromatogram obtained with the reference solution shows in the upper third a yellowish-green fluorescent zone (apigenin) and in the middle third a yellowish fluorescent zone (apigenin 7-glucoside). The chromatogram obtained with the test solution shows a yellowish-green fluorescent zone and a yellowish fluorescent zone similar in position and fluorescence to the zones due to apigenin and apigenin 7-glucoside in the chromatogram obtained with the reference solution; above the apigenin 7-glucoside zone there is a brownish fluorescent zone (luteolin); immediately below the apigenin 7-glucoside zone there is a light brownish fluorescent zone (apiin); immediately below the apiin zone there is a bright blue fluorescent zone and below this zone a bright blue fluorescent zone; other faint zones may be present.

TESTS

Diameter of the flower-heads: maximum 3 per cent of flower-heads have a diameter smaller than 8 mm.

Deteriorated flower-heads: brown or darkened flower-heads are absent.

Loss on drying (*2.2.32*): maximum 11.0 per cent, determined on 1.000 g of the powdered herbal drug (355) (*2.9.12*) by drying in an oven at 105 °C for 2 h.

Total ash (*2.4.16*): maximum 8.0 per cent.

ASSAY

Essential oil (*2.8.12*). Use 20.0 g of whole drug, a 500 mL round-bottomed flask, 250 mL of *water R* as the distillation liquid and 0.50 mL of *xylene R* in the graduated tube. Distil at a rate of 3-3.5 mL/min for 3 h.

01/2011:0174

CINCHONA BARK

Cinchonae cortex

DEFINITION

Whole or cut, dried bark of *Cinchona pubescens* Vahl (*Cinchona succirubra* Pav.), of *Cinchona calisaya* Wedd., of *Cinchona ledgeriana* Moens ex Trimen, or of their varieties or hybrids.

Content: minimum 6.5 per cent of total alkaloids, of which 30 per cent to 60 per cent consists of quinine-type alkaloids (dried drug).

CHARACTERS

Intense bitter, somewhat astringent taste.

IDENTIFICATION

A. The stem and branch bark is supplied in quilled or curved pieces 2-6 mm thick. The outer surface is dull brownish-grey or grey and frequently bears lichens; it is usually rough, marked with transverse fissures and longitudinally furrowed or wrinkled; exfoliation of the outer surface occurs in some varieties. The inner surface is striated and deep reddish-brown; the fracture is short in the outer part and fibrous in the inner part.

B. Reduce to a powder (355) (*2.9.12*). The powder is reddish-brown. Examine under a microscope using *chloral hydrate solution R*. The powder shows the following diagnostic characters (Figure 0174.-1): thin-walled cork cells filled with reddish-brown contents, in surface view [K] and transverse section [H]; yellow, spindle-shaped striated phloem fibres up to 90 µm in diameter and up to 1300 µm in length, very thick-walled with an uneven lumen and with conspicuous, funnel-shaped pits, whole [A] or fragmented [F, J]; parenchymatous idioblasts filled with microprisms of calcium oxalate [E, G]; clusters of thin-walled phloem parenchyma cells [L] accompanied by medullary rays in tangential section [D]. Examine under a microscope using a 50 per cent *V/V* solution of *glycerol R*. The powder shows a few starch granules 6-10 µm in diameter, mostly simple but occasionally with 2 or 3 components, free [B] or included in parenchymatous cells [C].

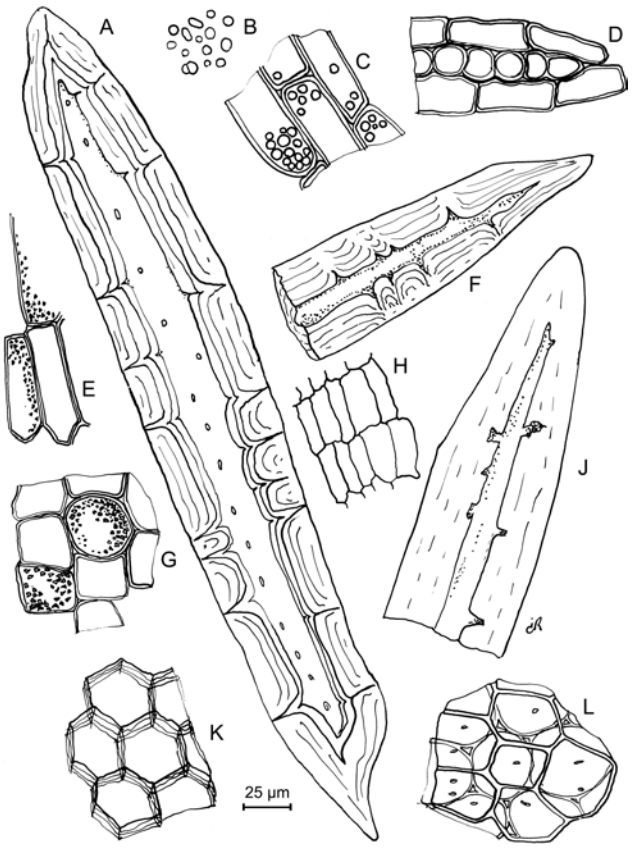

Figure 0174.-1. – *Illustration for identification test B of powdered herbal drug of cinchona bark*

C. Thin-layer chromatography (*2.2.27*).

Test solution. To 0.10 g of the powdered herbal drug (180) (*2.9.12*) in a test-tube add 0.1 mL of *concentrated ammonia R* and 5 mL of *methylene chloride R*. Shake

Herbal drugs

vigorously occasionally during 30 min and filter. Evaporate the filtrate to dryness on a water-bath and dissolve the residue in 1 mL of *anhydrous ethanol R*.

Reference solution. Dissolve 17.5 mg of *quinine R*, 2.5 mg of *quinidine R*, 10 mg of *cinchonine R* and 10 mg of *cinchonidine R* in 5 mL of *anhydrous ethanol R*.

Plate: *TLC silica gel plate R*.

Mobile phase: *diethylamine R*, *ethyl acetate R*, *toluene R* (10:20:70 *V/V/V*).

Application: 10 µL as bands.

Development: twice over a path of 15 cm.

Drying: at 100-105 °C, then allow to cool.

Detection A: spray with *anhydrous formic acid R* and allow to dry in air; examine in ultraviolet light at 365 nm.

Results A: see below the sequence of zones present in the chromatograms obtained with the reference solution and the test solution. Furthermore, other fluorescent zones are present in the chromatogram obtained with the test solution.

Top of the plate	
Quinidine: a distinct blue fluorescent zone	A distinct blue fluorescent zone (quinidine)
Quinine: a distinct blue fluorescent zone	A distinct blue fluorescent zone (quinine)
Reference solution	**Test solution**

Detection B: spray with *iodoplatinate reagent R*.

Results B: see below the sequence of zones present in the chromatograms obtained with the reference solution and the test solution. Furthermore, other zones are present in the chromatogram obtained with the test solution.

Top of the plate	
Cinchonine: a violet zone that becomes violet-grey	A violet zone that becomes violet-grey (cinchonine)
Quinidine: a violet zone that becomes violet-grey	A violet zone that becomes violet-grey (quinidine)
Cinchonidine: an intense dark blue zone	An intense dark blue zone (cinchonidine)
Quinine: a violet zone that becomes violet-grey	A violet zone that becomes violet-grey (quinine)
Reference solution	**Test solution**

TESTS

Total ash (*2.4.16*): maximum 6.0 per cent.

Loss on drying (*2.2.32*): maximum 10 per cent, determined on 1.000 g of the powdered herbal drug (355) (*2.9.12*) by drying in an oven at 105 °C for 2 h.

ASSAY

Test solution. In a 250 mL conical flask mix 1.000 g of the powdered herbal drug (180) (*2.9.12*) with 10 mL of *water R* and 7 mL of *dilute hydrochloric acid R*. Heat in a water-bath for 30 min, allow to cool and add 25 mL of *methylene chloride R*, 50 mL of *ether R* and 5 mL of a 200 g/L solution of *sodium hydroxide R*. Shake the mixture repeatedly for 30 min, add 3 g of powdered *tragacanth R* and shake until the mixture becomes clear. Filter through a plug of absorbent cotton and rinse the flask and the cotton with 5 quantities, each of 20 mL, of a mixture of 1 volume of *methylene chloride R* and 2 volumes of *ether R*. Combine the filtrate and washings, evaporate to dryness and dissolve the residue in 10.0 mL of *anhydrous ethanol R*. Evaporate 5.0 mL of this solution to dryness, dissolve the residue in *0.1 M hydrochloric acid* and dilute to 1000.0 mL with the same acid.

Reference solutions. Dissolve separately 30.0 mg of *quinine R* and 30.0 mg of *cinchonine R* in *0.1 M hydrochloric acid* and dilute each solution to 1000.0 mL with the same acid.

Measure the absorbances (*2.2.25*) of the 3 solutions at 316 nm and 348 nm using *0.1 M hydrochloric acid* as the compensation liquid.

Calculate the percentage content of alkaloids using the following equations:

$$x = \frac{[A_{316} \times A_{348c}] - [A_{316c} \times A_{348}]}{[A_{316q} \times A_{348c}] - [A_{316c} \times A_{348q}]} \times \frac{100}{m} \times \frac{2}{1000}$$

$$y = \frac{[A_{316} \times A_{348q}] - [A_{316q} \times A_{348}]}{[A_{316c} \times A_{348q}] - [A_{316q} \times A_{348c}]} \times \frac{100}{m} \times \frac{2}{1000}$$

m = mass of the herbal drug used, in grams;

x = percentage content of quinine-type alkaloids;

y = percentage content of cinchonine-type alkaloids;

A_{316} = absorbance of the test solution at 316 nm;

A_{348} = absorbance of the test solution at 348 nm;

A_{316c} = absorbance of the reference solution containing cinchonine at 316 nm, corrected to a concentration of 1 mg/1000 mL;

A_{316q} = absorbance of the reference solution containing quinine at 316 nm, corrected to a concentration of 1 mg/1000 mL;

A_{348c} = absorbance of the reference solution containing cinchonine at 348 nm, corrected to a concentration of 1 mg/1000 mL;

A_{348q} = absorbance of the reference solution containing quinine at 348 nm, corrected to a concentration of 1 mg/1000 mL.

Calculate the content of total alkaloids ($x + y$), and calculate the relative content of quinine-type alkaloids using the following expression:

$$\frac{100x}{x+y}$$

01/2008:1818

CINCHONA LIQUID EXTRACT, STANDARDISED

Cinchonae extractum fluidum normatum

DEFINITION

Liquid extract produced from *Cinchona bark (0174)*.

Content: minimum 4.0 per cent and maximum 5.0 per cent of total alkaloids, of which 30 per cent to 60 per cent are alkaloids of the quinine type ($C_{20}H_{24}N_2O_2$; M_r 324.4).

PRODUCTION

Standardised cinchona liquid extract is produced from the herbal drug by an appropriate procedure using:

- ethanol (30 per cent *V/V* to 90 per cent *V/V*), or;
- a mixture of diluted hydrochloric acid, ethanol (96 per cent *V/V*), glycerol, water (1:2:5:20 *V/V*).

CHARACTERS

Appearance: brownish-red liquid.

It has a bitter, astringent taste.

Herbal drugs

IDENTIFICATION

Thin-layer chromatography (*2.2.27*).

Test solution. Dilute 1 mL of the extract to be examined in 1 mL of *anhydrous ethanol R*.

Reference solution. Dissolve 2.5 mg of *quinidine R*, 10 mg of *cinchonidine R*, 10 mg of *cinchonine R* and 17.5 mg of *quinine R* in 5 mL of *anhydrous ethanol R*.

Plate: *TLC silica gel plate R* (5-40 µm) [or *TLC silica gel plate R* (2-10 µm)].

Mobile phase: *diethylamine R*, *ethyl acetate R*, *toluene R* (10:20:70 *V/V/V*).

Application: 10 µL [or 2 µL] as bands.

Development: twice over a path of 15 cm [or 6 cm].

Drying: at 100-105 °C then allow to cool.

Detection A: spray with a 50 g/L solution of *anhydrous formic acid R* and allow to dry in air; examine in ultraviolet light at 365 nm.

Results A: see below the sequence of the zones present in the chromatograms obtained with the reference solution and the test solution. Furthermore, other fluorescent zones may be present in the chromatogram obtained with the test solution.

Top of the plate	
———	———
Quinidine: a distinct blue fluorescent zone	A distinct blue fluorescent zone (quinidine)
———	———
Quinine: a distinct blue fluorescent zone	A distinct blue fluorescent zone (quinine)
Reference solution	**Test solution**

Detection B: spray with *iodoplatinate reagent R*.

Results B: see below the sequence of the zones present in the chromatograms obtained with the reference solution and the test solution. Furthermore, other zones may be present in the chromatogram obtained with the test solution.

Top of the plate	
———	———
Cinchonine: a violet-grey zone	A violet-grey zone (cinchonine)
Quinidine: a violet-grey zone	A violet-grey zone (quinidine)
Cinchonidine: an intense dark blue zone	An intense dark blue zone (cinchonidine)
———	———
Quinine: a violet-grey zone	A violet-grey zone (quinine)
Reference solution	**Test solution**

TESTS

Ethanol (*2.9.10*): 95 per cent to 105 per cent of the content stated on the label.

Methanol and 2-propanol (*2.9.11*): maximum 0.05 per cent *V/V* of methanol and maximum 0.05 per cent *V/V* of 2-propanol.

Dry residue (*2.8.16*): minimum 12.0 per cent for glycerol-free standardised cinchona liquid extract and minimum 30.0 per cent for glycerol-containing standardised cinchona extract, determined on 2.0 g.

ASSAY

Test solution. In a 250 mL conical flask, mix about 1.000 g of the extract to be examined with 10 mL of *water R* and 7 mL of *dilute hydrochloric acid R*. Heat in a water-bath for 30 min, allow to cool and add 25 mL of *methylene chloride R*, 50 mL of *ether R* and 5 mL of a 200 g/L solution of *sodium hydroxide R*. Shake the mixture frequently for 30 min, add 3 g of powdered *tragacanth R* and shake until the mixture becomes clear. Filter through a plug of absorbent cotton, rinse the flask and the cotton with 5 quantities, each of 20 mL, of a mixture of 1 volume of *methylene chloride R* and 2 volumes of *ether R*. Combine the filtrate and washings, evaporate to dryness and dissolve the residue in 10.0 mL of *ethanol (96 per cent) R*. Evaporate 5.0 mL of this solution to dryness, dissolve the residue in *0.1 M hydrochloric acid* and dilute to 1000.0 mL with the same acid.

Reference solution (a). Dissolve 30.0 mg of *cinchonine R* in *0.1 M hydrochloric acid* and dilute to 1000.0 mL with the same acid.

Reference solution (b). Dissolve 30.0 mg of *quinine R* in *0.1 M hydrochloric acid* and dilute to 1000.0 mL with the same acid.

Measure the absorbances (*2.2.25*) of the 3 solutions at 316 nm and 348 nm, using *0.1 M hydrochloric acid* as the compensation liquid.

Calculate the percentage content of alkaloids from the following equations:

$$n_1 = \frac{[A_1 \times A_{2a}] - [A_{1a} \times A_2]}{[A_{1b} \times A_{2a}] - [A_{1a} \times A_{2b}]} \times \frac{100}{m} \times \frac{2}{1000}$$

$$n_2 = \frac{[A_1 \times A_{2b}] - [A_{1b} \times A_2]}{[A_{1a} \times A_{2b}] - [A_{1b} \times A_{2a}]} \times \frac{100}{m} \times \frac{2}{1000}$$

m = mass of the liquid extract to be examined in grams;

n_1 = percentage content of quinine-type alkaloids;

n_2 = percentage content of cinchonine-type alkaloids;

A_1 = absorbance of the test solution at 316 nm;

A_2 = absorbance of the test solution at 348 nm;

A_{1a} = absorbance of reference solution (a) at 316 nm, corrected to a concentration of 1 mg/1000 mL;

A_{1b} = absorbance of reference solution (b) at 316 nm, corrected to a concentration of 1 mg/1000 mL;

A_{2a} = absorbance of reference solution (a) at 348 nm, corrected to a concentration of 1 mg/1000 mL;

A_{2b} = absorbance of reference solution (b) at 348 nm, corrected to a concentration of 1 mg/1000 mL.

Calculate the content of total alkaloids ($n_1 + n_2$), and the relative content of quinine-type alkaloids, from the following expression:

$$\frac{n_1 \times 100}{n_1 + n_2}$$

LABELLING

The label states the solvent composition used for the production.

04/2011:0387

CINNAMON

Cinnamomi cortex

DEFINITION

Dried bark, freed from the outer cork and the underlying parenchyma, of the shoots grown on cut stock of *Cinnamomum verum* J.Presl.

Content: minimum 12 mL/kg of essential oil.

CHARACTERS

Characteristic, aromatic odour.

IDENTIFICATION

A. The bark is about 0.2-0.8 mm thick and occurs in closely packed compound quills made up of single or double quills. The outer surface is smooth, yellowish-brown with

Herbal drugs

faint scars marking the position of leaves and axillary buds and has fine, whitish and wavy longitudinal striations. The inner surface is slightly darker and longitudinally striated. The fracture is short and fibrous.

B. Microscopic examination (*2.8.23*). The powder is yellowish or reddish-brown. Examine under a microscope using *chloral hydrate solution R*. The powder shows the following diagnostic characters (Figure 0387.-1): rounded sclereids with pitted, channelled and moderately thickened walls, single [E, F] or in groups [C]; numerous colourless, single fibres, often whole [A], or fragmented [D], with a narrow lumen, thickened, lignified walls and few pits; small acicular crystals of calcium oxalate in parenchymatous cells [J]; very numerous oil droplets [B]. Cork fragments [G] are absent or very rare. Examine under a microscope using a 50 per cent *V/V* solution of *glycerol R*. The powder shows abundant starch granules [H].

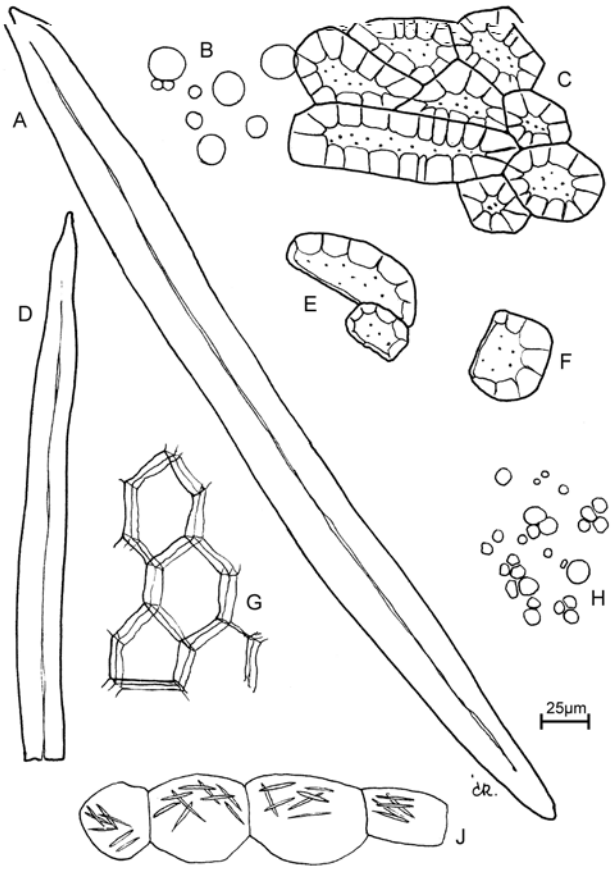

Figure 0387.-1. – *Illustration for identification test B of powdered herbal drug of cinnamon*

C. Thin-layer chromatography (*2.2.27*).

Test solution. Shake 0.1 g of the powdered herbal drug (500) (*2.9.12*) with 2 mL of *methylene chloride R* for 15 min. Filter and evaporate the filtrate carefully almost to dryness on a water-bath. Dissolve the residue in 0.4 mL of *toluene R*.

Reference solution. Dissolve 50 µL of *cinnamic aldehyde R* and 10 µL of *eugenol R* in *toluene R* and dilute to 10 mL with the same solvent.

Plate: *TLC silica gel* GF_{254} *plate R*.

Mobile phase: *methylene chloride R*.

Application: 10 µL as bands of 20 mm by 3 mm.

Development: over a path of 10 cm.

Drying: in air.

Detection A: examine in ultraviolet light at 254 nm and mark the quenching zones, then examine in ultraviolet light at 365 nm and mark the fluorescent zones.

Results A: examined in ultraviolet light at 254 nm, the chromatograms obtained with the test solution and the reference solution show a quenching zone due to cinnamaldehyde in the median part and, just above it, a weaker quenching zone due to eugenol; examined in ultraviolet light at 365 nm, the chromatogram obtained with the test solution shows a fluorescent light blue zone due to *o*-methoxycinnamaldehyde just below the zone due to cinnamaldehyde.

Detection B: spray with *phloroglucinol solution R*.

Results B: the zone due to cinnamaldehyde is yellowish-brown and the zone due to *o*-methoxycinnamaldehyde is violet.

TESTS

Total ash (*2.4.16*): maximum 6.0 per cent.

ASSAY

Essential oil (*2.8.12*). Use 20.0 g of drug reduced to a powder (710) (*2.9.12*) immediately before the determination, a 500 mL flask, 200 mL of *0.1 M hydrochloric acid* as the distillation liquid, and 0.50 mL of *xylene R* in the graduated tube. Distil at a rate of 2.5-3.5 mL/min for 3 h.

04/2011:1501

CINNAMON BARK OIL, CEYLON

Cinnamomi zeylanici corticis aetheroleum

DEFINITION

Essential oil obtained by steam distillation of the bark of the shoots of *Cinnamomum verum* J.Presl.

CHARACTERS

Appearance: clear, mobile, light yellow liquid becoming reddish over time.

Characteristic odour reminiscent of cinnamic aldehyde.

IDENTIFICATION

First identification: B.

Second identification: A.

A. Thin-layer chromatography (*2.2.27*).

Test solution. Dissolve 1 mL of the essential oil to be examined in *acetone R* and dilute to 10 mL with the same solvent.

Reference solution. Dissolve 50 µL of *trans-cinnamic aldehyde R*, 10 µL of *eugenol R*, 10 µL of *linalol R* and 10 µL of *β-caryophyllene R* in *ethanol (96 per cent) R* and dilute to 10 mL with the same solvent.

Plate: *TLC silica gel plate R*.

Mobile phase: *methanol R*, *toluene R* (10:90 *V/V*).

Application: 10 µL as bands.

Development: over a path of 15 cm.

Drying: in air.

Detection: spray with *anisaldehyde solution R*; heat at 100-105 °C for 5-10 min and examine in daylight.

Results: the zones in the chromatogram obtained with the test solution are similar in position and colour to those in the chromatogram obtained with the reference solution.

B. Examine the chromatograms obtained in the test for chromatographic profile.

Results: the principal peaks in the chromatogram obtained with the test solution are similar in retention time to those in the chromatogram obtained with the reference solution. Safrole, coumarin and cineole may be absent from the chromatogram obtained with the test solution.

TESTS

Relative density (*2.2.5*): 1.000 to 1.030.

Herbal drugs

Refractive index (*2.2.6*): 1.572 to 1.591.

Optical rotation (*2.2.7*): − 2° to + 1°.

Chromatographic profile. Gas chromatography (*2.2.28*): use the normalisation procedure.

Test solution. The essential oil to be examined.

Reference solution. Dissolve 10 µL of *cineole R*, 10 µL of *linalol R*, 10 µL of *β-caryophyllene R*, 10 µL of *safrole R*, 100 µL of *trans-cinnamic aldehyde R*, 10 µL of *eugenol R*, 20 mg of *coumarin R*, 10 µL of *trans-2-methoxycinnamaldehyde R* and 10 µL of *benzyl benzoate R* in 1 mL of *acetone R*.

Column:

- *material*: fused silica;
- *size*: *l* = 60 m, Ø = 0.25 mm;
- *stationary phase*: bonded *macrogol 20 000 R*.

Carrier gas: *helium for chromatography R*.

Flow rate: 1.5 mL/min.

Split ratio: 1:100.

Temperature:

	Time (min)	Temperature (°C)
Column	0 - 10	60
	10 - 75	60 → 190
	75 - 200	190
Injection port		200
Detector		240

Detection: flame ionisation.

Injection: 0.2 µL.

Elution order: order indicated in the composition of the reference solution; depending on the operating conditions and the state of the column, coumarin may elute before or after *trans*-2-methoxycinnamaldehyde; record the retention times of these substances.

System suitability: reference solution:

- *resolution*: minimum 1.5 between the peaks due to linalol and β-caryophyllene.

Identification of components: using the retention times determined from the chromatogram obtained with the reference solution, locate the components of the reference solution in the chromatogram obtained with the test solution.

Determine the percentage content of each of these components. The percentages are within the following ranges:

- *cineole*: maximum 3.0 per cent;
- *linalol*: 1.0 per cent to 6.0 per cent;
- *β-caryophyllene*: 1.0 per cent to 4.0 per cent;
- *safrole*: maximum 0.5 per cent;
- *trans-cinnamic aldehyde*: 55 per cent to 75 per cent;
- *eugenol*: maximum 7.5 per cent;
- *coumarin*: maximum 0.5 per cent;
- *trans-2-methoxycinnamaldehyde*: 0.1 per cent to 1.0 per cent;
- *benzyl benzoate*: maximum 1.0 per cent.

STORAGE

Protected from heat.

01/2008:1608
corrected 7.0

CINNAMON LEAF OIL, CEYLON

Cinnamomi zeylanici folii aetheroleum

DEFINITION

Oil obtained by steam distillation of the leaves of *Cinnamomum verum* J.S. Presl.

CHARACTERS

Appearance: clear, mobile, reddish-brown or dark brown liquid.

Characteristic odour reminiscent of eugenol.

IDENTIFICATION

First identification: *B*.

Second identification: *A*.

A. Thin-layer chromatography (*2.2.27*).

Test solution. Dilute 1 mL of the substance to be examined in *acetone R* and dilute to 10 mL with the same solvent.

Reference solution. Dilute about 50 µL of *trans-cinnamic aldehyde R*, 10 µL of *eugenol R*, 10 µL of *linalol R* and 10 µL of *β-caryophyllene R* in *alcohol R* and dilute to 10 mL with the same solvent.

Plate: *TLC silica gel plate R*.

Mobile phase: *methanol R*, *toluene R* (10:90 *V/V*).

Application: 10 µL, as bands.

Development: over a path of 15 cm.

Drying: in air.

Detection: spray with *anisaldehyde solution R*. Examine in day light while heating at 100-105 °C for 5-10 min.

Results: the zones in the chromatogram obtained with the test solution are similar in position and colour to those in the chromatogram obtained with the reference solution. The zone due to *trans*-cinnamic aldehyde may be very faint or absent.

B. Examine the chromatogram obtained in the test for chromatographic profile.

Results: the characteristic peaks in the chromatogram obtained with the test solution are similar in retention time to those in the chromatogram obtained with the reference solution. The peaks corresponding to cineole, safrole, *trans*-cinnamic aldehyde, cinnamyl acetate and coumarin may be absent in the chromatogram obtained with the test solution.

TESTS

Relative density (*2.2.5*): 1.030 to 1.059.

Refractive index (*2.2.6*): 1.527 to 1.540.

Optical rotation (*2.2.7*): − 2.5° to + 2.0°.

Chromatographic profile. Gas chromatography (*2.2.28*): use the normalisation procedure.

Test solution. The substance to be examined.

Reference solution. Dissolve 10 µL of *cineole R*, 10 µL of *linalol R*, 10 µL of *β-caryophyllene R*, 10 µL of *safrole R*, 10 µL of *trans-cinnamic aldehyde R*, 10 µL of *cinnamyl acetate R*, 100 µL of *eugenol R* and 10 mg of *coumarin R* in 1 mL of *acetone R*.

Column:

- *material*: fused silica,
- *size*: *l* = 60 m, Ø = 0.25 mm,
- *stationary phase*: *macrogol 20 000 R*.

Carrier gas: *helium for chromatography R*.

Flow rate: 1.5 mL/min.

Split ratio: 1/100.

Herbal drugs

Temperature:

	Time (min)	Temperature (°C)
Column	0 - 10	45
	10 - 78	45 → 180
	78 - 88	180
Injection port		200
Detector		240

Detection: flame ionisation.

Injection: 0.2 µL.

Elution order: the order indicated in the composition of the reference solution. Record the retention times of these substances.

System suitability: reference solution:

- *resolution*: minimum of 1.5 between the peaks due to linalol and β-caryophyllene.

Using the retention times determined from the chromatogram obtained with the reference solution, locate the components of the reference solution in the chromatogram obtained with the test solution.

Determine the percentage content of these components.

The percentages are within the following ranges:

- *cineole*: maximum 1.0 per cent,
- *linalol*: 1.5 per cent to 3.5 per cent,
- *β-caryophyllene*: 1.5 per cent to 7.0 per cent,
- *safrole*: maximum 3.0 per cent,
- *trans-cinnamic aldehyde*: maximum 3.0 per cent,
- *cinnamyl acetate*: maximum 2.0 per cent,
- *eugenol*: 70 per cent to 85 per cent,
- *coumarin*: maximum 1.0 per cent.

STORAGE

Protected from heat.

01/2008:1819

CINNAMON TINCTURE

Cinnamomi corticis tinctura

DEFINITION

Tincture produced from *Cinnamon (0387)*.

PRODUCTION

The tincture is produced from 1 part of the drug and 5 parts of ethanol (70 per cent *V/V*) by an appropriate procedure.

CHARACTERS

Appearance: clear, brownish-red liquid, with a characteristic odour.

IDENTIFICATION

Thin-layer chromatography (*2.2.27*).

Test solution. Place 10 mL of the tincture to be examined, 10 mL of *saturated sodium chloride solution R* and 5 mL of *toluene R* in a ground glass-stoppered tube. Shake for 2 min and centrifuge for 10 min. Use the organic layer.

Reference solution. Dissolve 5 µL of *eugenol R*, 25 µL of *trans-cinnamic aldehyde R* and 5 µL of *trans-2-methoxycinnamaldehyde R* in *toluene R* and dilute to 10 mL with the same solvent.

Plate: *TLC silica gel G plate R*.

Mobile phase: *methylene chloride R*.

Application: 20 µL, as bands.

Development: over a path of 10 cm.

Drying: in air.

Detection A: examine in ultraviolet light at 365 nm.

Results A: see below the sequence of the zones present in the chromatograms obtained with the reference solution and the test solution.

Top of the plate	
_____	_____
Trans-2-methoxycinnamaldehyde: a light blue fluorescent zone	A light blue fluorescent zone (*trans*-2- methoxycinnamaldehyde)
_____	_____
	A greenish fluorescent zone (above the line of application)
Reference solution	**Test solution**

Detection B: spray with a 200 g/L solution of *phosphomolybdic acid R* in *ethanol R*. Examine in daylight while heating at 100-105 °C for 5-10 min.

Results B: see below the sequence of the zones present in the chromatograms obtained with the reference solution and the test solution. Furthermore, other zones may be present in the chromatogram obtained with the test solution.

Top of the plate	
	1 blue zone (terpenhydrocarbons)
_____	_____
Eugenol: a blue zone	A blue zone (eugenol)
Trans-cinnamic aldehyde: a blue zone	A blue zone (*trans*-cinnamic aldehyde)
Trans-2-methoxycinnamaldehyde: an orange-brown zone (the colour fades away)	A weak orange-brown zone (*trans*-2-methoxycinnamaldehyde)
_____	_____
	2 or 3 blue zones above the line of application
Reference solution	**Test solution**

TESTS

Ethanol (*2.9.10*): 64 per cent *V/V* to 70 per cent *V/V*.

Methanol and 2-propanol (*2.9.11*): maximum 0.05 per cent *V/V* of methanol and maximum 0.05 per cent *V/V* of 2-propanol.

Dry residue (*2.8.16*): minimum 1.5 per cent *m/m*, determined on 5.0 g.

01/2008:1609
corrected 7.0

CITRONELLA OIL

Citronellae aetheroleum

DEFINITION

Oil obtained by steam distillation from the fresh or partially dried aerial parts of *Cymbopogon winterianus* Jowitt.

CHARACTERS

Appearance: pale yellow or brown-yellow liquid.

Very strong odour of citronellal.

IDENTIFICATION

First identification: *B*.

Second identification: *A*.

A. Thin-layer chromatography (*2.2.27*).

Test solution. Dilute 0.1 g of citronella oil in 10.0 mL of *alcohol R*.

Reference solution. Dilute 20 µL of *citronellal R* in 10.0 mL of *alcohol R*.

Plate: *TLC silica gel plate R*.

Herbal drugs

Mobile phase: *ethyl acetate R*, *toluene R* (10:90 *V/V*).

Application: 5 µL, as bands.

Development: over a path of 15 cm.

Drying: in air.

Detection: spray with *anisaldehyde solution R* and heat at 100-105 °C for 10 min. Examine in ultraviolet light at 365 nm.

Result: see below the sequence of the zones present in the chromatograms obtained with the reference and test solutions. Furthermore, other zones are present in the chromatogram obtained with the test solution.

Top of the plate	
Citronellal: a violet zone	A zone similar in colour to the citronellal zone An orange zone (citronellol-geraniol)
Reference solution	**Test solution**

B. Examine the chromatograms obtained in the test for chromatographic profile.

Results: the characteristic peaks in the chromatogram obtained with the test solution are similar in retention time to those in the chromatogram obtained with the reference solution. Neral and geranial may be absent in the chromatogram obtained with the test solution.

TESTS

Relative density (*2.2.5*): 0.881 to 0.895.

Refractive index (*2.2.6*): 1.463 to 1.475.

Optical rotation (*2.2.7*): – 4° to + 1.5°.

Chromatographic profile. Gas chromatography (*2.2.28*): use the normalisation procedure.

Test solution. The substance to be examined.

Reference solution. Dilute 25 µL of *limonene R*, 100 µL of *citronellal R*, 25 µL of *citronellyl acetate R*, 25 µL of *citral R*, 25 µL of *geranyl acetate R*, 25 µL of *citronellol R* and 100 µL of *geraniol R* in 5 mL of *hexane R*.

Column:

- *material*: fused silica,
- *size*: *l* = 60 m, Ø = 0.25 mm,
- *stationary phase*: *macrogol 20 000 R* (0.2 µm).

Carrier gas: *helium for chromatography R*.

Flow rate: 1.0 mL/min.

Split ratio: 1:100.

Temperature:

	Time (min)	Temperature (°C)
Column	0 - 2	80
	2 - 26	80 → 150
	26 - 42	150 → 185
	42 - 49	185 → 250
Injection port		260
Detector		260

Detection: flame ionisation.

Injection: 1 µL of the reference solution, 0.2 µL of the test solution.

Elution order: the order indicated in the composition of the reference solution. Record the retention times of these substances.

System suitability: reference solution:

- *resolution*: minimum of 1.2 between the peaks due to geranyl acetate and citronellol.

Using the retention times determined from the chromatogram obtained with the reference solution, locate the components of the reference solution in the chromatogram obtained with the test solution.

Determine the percentage content of each of these components.

The percentages are within the following values:

- *limonene*: 1.0 per cent to 5.0 per cent,
- *citronellal*: 30.0 per cent to 45.0 per cent,
- *citronellyl acetate*: 2.0 per cent to 4.0 per cent,
- *neral*: maximum 2.0 per cent,
- *geranial*: maximum 2.0 per cent,
- *geranyl acetate*: 3.0 per cent to 8.0 per cent,
- *citronellol*: 9.0 per cent to 15.0 per cent,
- *geraniol*: 20.0 per cent to 25.0 per cent.

01/2008:1850
corrected 7.0

CLARY SAGE OIL

Salviae sclareae aetheroleum

DEFINITION

Essential oil obtained by steam distillation from the fresh or dried flowering stems of *Salvia sclarea* L.

CHARACTERS

Appearance: colourless or brownish-yellow liquid, usually pale yellow.

Characteristic odour.

IDENTIFICATION

First identification: *B*.

Second identification: *A*.

A. Thin-layer chromatography (*2.2.27*).

Test solution. Dissolve 1 mL of the substance to be examined in *toluene R* and dilute to 10 mL with the same solvent.

Reference solution. Dissolve 60 µL of *linalol R*, 200 µL of *linalyl acetate R* and 60 µL of *α-terpineol R* in *toluene R* and dilute to 10 mL with the same solvent.

Plate: *TLC silica gel plate R*.

Mobile phase: *ethyl acetate R*, *toluene R* (5:95 *V/V*).

Application: 5 µL of the test solution and 10 µL of the reference solution, as bands.

Development: over a path of 15 cm.

Drying: in air.

Detection: spray with *vanillin reagent R* and heat at 100-105 °C for 5-10 min; examine in daylight within 5 min.

Results: see below the sequence of the zones present in the chromatograms obtained with the reference solution and the test solution. Furthermore, other faint zones are present in the chromatogram obtained with the test solution.

Top of the plate	
α-Terpineol: a dark violet zone	A dark violet zone
Linalyl acetate: a dark violet zone	A dark violet zone
Linalol: a dark violet zone	A dark violet zone
Reference solution	**Test solution**

B. Examine the chromatograms obtained in the test for chromatographic profile.

Herbal drugs

Results: the chromatogram obtained with the test solution shows 5 peaks similar in position to the 5 peaks in the chromatogram obtained with the reference solution. The 2 peaks corresponding to α- and β-thujone may be absent.

TESTS

Relative density (*2.2.5*): 0.890 to 0.908.

Refractive index (*2.2.6*): 1.456 to 1.466.

Optical rotation (*2.2.7*): – 26° to – 10°.

Acid value (*2.5.1*): maximum 1.0.

Chromatographic profile. Gas chromatography (*2.2.28*): use the normalisation procedure.

Test solution. The substance to be examined.

Reference solution. To 1 g of *hexane R*, add 5 µL of *thujone R*, 5 µL of *linalol R*, 100 µL of *linalyl acetate R*, 10 µL of *α-terpineol R* and 25 mg (± 20 per cent) of *sclareol R*. Mix thoroughly by stirring.

Column:

- *material*: fused silica,
- *size*: *l* = 30 m (a film thickness of 1 µm may be used) to 60 m (a film thickness of 0.2 µm may be used), Ø = 0.25-0.53 mm,
- *stationary phase*: *macrogol 20 000 R*.

Carrier gas: *helium for chromatography R*.

Split ratio: 1:100.

Temperature:

	Time (min)	Temperature (°C)
Column	0 - 10	60
	10 - 75	60 → 190
	75 - 120	190
Injection port		220
Detector		240

Detection: flame ionisation.

Injection: 0.2 µL.

Elution order: order indicated in the composition of the reference solution. Record the retention times of these substances.

System suitability: reference solution:

- *resolution*: minimum 1.5 between the peaks due to linalol and linalyl acetate,

Using the retention times determined from the chromatogram obtained with the reference solution, locate the components of the reference solution in the chromatogram obtained with the test solution (disregard any peak due to hexane). *Thujone R* is a mixture of α- and β-thujone. α-Thujone elutes before β-thujone under the described conditions.

Determine the percentage content of each of these components.

Also determine the percentage content of germacrene-D. The germacrene-D peak can be identified in the chromatogram obtained with the test solution by its relative retention of 1.23 with reference to linalol under the described operating conditions.

The percentages are within the following ranges:

- *α- and β-thujone*: maximum 0.2 per cent,
- *linalol*: 6.5 per cent to 24 per cent,
- *linalyl acetate*: 56 per cent to 78 per cent,
- *α-terpineol*: maximum 5.0 per cent,
- *germacrene-D*: 1.0 per cent to 12 per cent,
- *sclareol*: 0.4 per cent to 2.6 per cent.

STORAGE

At a temperature not exceeding 25 °C.

04/2013:2463

CLEMATIS ARMANDII STEM

Clematidis armandii caulis

DEFINITION

Whole or fragmented, dried stem of *Clematis armandii* Franch., with cork removed, collected in spring or autumn.

Content: minimum 0.30 per cent of oleanolic acid ($C_{30}H_{48}O_3$; M_r 456.7) (dried drug).

IDENTIFICATION

A. The whole stem is long and cylindrical, slightly twisted on itself, about 1-6.5 cm in diameter. It shows nodes, usually swollen, with leaf and branch scars. The outer surface is brownish-yellow or dull brownish-yellow, showing longitudinal grooves and striations corresponding to the ends of the medullary rays. Rare cork remnants are easily removed as longitudinal strips. The texture is hard. The fracture is difficult.

The fragmented stem occurs in thick slices, about 2-5 mm thick, with uneven margins; most of the transverse section consists of the pale yellow or slightly brownish-yellow wood and shows numerous radial striations and cracks corresponding to the medullary rays; the vessels are clearly visible in transverse section. The pale yellow or whitish pith, sometimes replaced by a hollow, is reduced.

B. Microscopic examination (*2.8.23*). The powder is brownish-yellow. Examine under a microscope using *chloral hydrate solution R*. The powder shows the following diagnostic characters: very numerous fragments of vessels, up to 250 µm in diameter, with pitted walls, isolated or associated with elongated tracheids about 15-25 µm in diameter with lignified, thickened and pitted walls; fibres 25-30 µm in diameter, with narrow lumen and thick and partly, slightly pitted walls; parenchymatous cells of the secondary phloem and outer parts of the medullary rays, thin-walled, from the secondary xylem, inner parts of the medullary rays and pith, with slightly thickened, pitted and lignified cell walls; sub-rectangular or fusiform sclereids, about 100 µm long and 35 µm wide, with thick and pitted walls; rare orange-brown cork fragments. Examine under a microscope using a 50 per cent *V/V* solution of *glycerol R*. The powder shows rare starch granules, simple or 2-3 compound, spherical or ovate, individual granules up to 17 µm in diameter, with a punctiform or slit-shaped hilum.

C. Thin-layer chromatography (*2.2.27*).

Test solution. To 1 g of the powdered herbal drug (1400) (*2.9.12*) add 5 mL of *methanol R* and heat on a water-bath at 60 °C for 5 min. Filter.

Reference solution. Dissolve 4 mg of *hederagenin R* and 4 mg of *oleanolic acid R* in 10 mL of *methanol R*.

Plate: *TLC silica gel F_{254} plate R* (5-40 µm) [or *TLC silica gel F_{254} plate R* (2-10 µm)].

Mobile phase: *acetic acid R, acetone R, toluene R* (2:8:32 *V/V/V*).

Application: 40 µL [or 10 µL] as bands of 10 mm [or 8 mm].

Development: over a path of 13 cm [or 6 cm].

Drying: in air.

Detection: treat with *vanillin reagent R*, heat at 100 °C for 5 min and examine in daylight.

Results: see below the sequence of zones present in the chromatograms obtained with the reference solution and the test solution. Furthermore, other mainly grey zones may be present in the chromatogram obtained with the test solution.

Herbal drugs

Top of the plate	
———	———
	A bluish-violet zone
Oleanolic acid: a reddish-violet zone	A reddish-violet zone
	A weak light blue or grey zone
———	———
Hederagenin: a greenish-brown zone	
	An orange zone
Reference solution	**Test solution**

TESTS

***Aristolochia manshuriensis* Kom. and other species of *Aristolochia*.** Examine the powdered herbal drug (355) (*2.9.12*) under a microscope using *chloral hydrate solution R*; no cluster crystals are visible.

Aristolochic acids (*2.8.21, Method A*). It complies with the test.

Loss on drying (*2.2.32*): maximum 12.0 per cent, determined on 1.000 g of the powdered herbal drug (1400) (*2.9.12*) by drying in an oven at 105 °C for 2 h.

Total ash (*2.4.16*): maximum 3.0 per cent.

ASSAY

Liquid chromatography (*2.2.29*).

Test solution. Disperse 1.00 g of the powdered herbal drug (355) (*2.9.12*) in *methanol R*, add 3 mL of *6 M hydrochloric acid R* and dilute to 30.0 mL with *methanol R*. Shake for 2 h. Filter, add to the filtrate 10 mL of *water R* by rinsing the flask and the filter, and extract with 3 quantities, each of 30 mL, of *methylene chloride R*. Combine the methylene chloride extracts and evaporate to dryness. Dissolve the residue in 10.0 mL of *methanol R*, shake and filter through a membrane filter (nominal pore size 0.45 µm).

Reference solution (a). Dissolve 10.0 mg of *oleanolic acid CRS* in *methanol R* and dilute to 20.0 mL with the same solvent.

Reference solution (b). Dissolve 5.0 mg of *ursolic acid R* in reference solution (a) and dilute to 10.0 mL with the same solution.

Column:

- *size*: *l* = 0.25 m, Ø = 4.6 mm;
- *stationary phase*: *end-capped octadecylsilyl silica gel for chromatography R* (5 µm);
- *temperature*: 30 °C.

Mobile phase: 0.4 per cent *V/V* solution of *acetic acid R*, *methanol R* (15:85 *V/V*).

Flow rate: 1.0 mL/min.

Detection: spectrophotometer at 210 nm.

Injection: 20 µL.

Run time: 1.2 times the retention time of ursolic acid.

Retention time: oleanolic acid = about 21 min; ursolic acid = about 22 min.

System suitability: reference solution (b):

- *resolution*: minimum 1.3 between the peaks due to oleanolic acid and ursolic acid.

Calculate the percentage content of oleanolic acid using the following expression:

$$\frac{A_1 \times m_2 \times p}{A_2 \times m_1 \times 2}$$

A_1 = area of the peak due to oleanolic acid in the chromatogram obtained with the test solution;

A_2 = area of the peak due to oleanolic acid in the chromatogram obtained with reference solution (a);

m_1 = mass of the herbal drug to be examined used to prepare the test solution, in grams;

m_2 = mass of *oleanolic acid CRS* used to prepare reference solution (a), in grams;

p = percentage content of oleanolic acid in *oleanolic acid CRS*.

01/2008:0376
corrected 7.6

CLOVE

Caryophylli flos

DEFINITION

Whole flower buds of *Syzygium aromaticum* (L.) Merr. et L.M.Perry (syn. *Eugenia caryophyllus* (Spreng.) Bullock et S.G.Harrison) dried until they become reddish-brown.

Content: minimum 150 mL/kg of essential oil.

CHARACTERS

Characteristic, aromatic odour.

IDENTIFICATION

A. The flower bud is reddish-brown and consists of a quadrangular stalked portion, the hypanthium, 10-12 mm long and 2-3 mm in diameter, surmounted by 4 divergent lobes of sepals which surround a globular head 4-6 mm in diameter. A bilocular ovary containing numerous ovules is situated in the upper part of the hypanthium. The head is globular and dome-shaped, composed of 4 imbricated petals that enclose numerous incurved stamens and a short, erect style with a nectary disc at the base. The hypanthium exudes essential oil when indented with the finger-nail.

B. Reduce to a powder (355) (*2.9.12*). The powder is dark brown and has the odour and taste of the unground drug. Examine under a microscope using *chloral hydrate solution R*. The powder shows the following diagnostic characters: fragments of the hypanthium showing the epidermis and underlying parenchyma containing large oil glands; short fibres occurring singly or in small groups, with thickened, lignified walls and few pits; abundant fragments of parenchyma containing cluster crystals of calcium oxalate; numerous triangular pollen grains about 15 µm in diameter with 3 pores in the angles. Starch granules are absent.

C. Thin-layer chromatography (*2.2.27*).

Test solution. Shake 0.1 g of the powdered herbal drug (500) (*2.9.12*) with 2 mL of *methylene chloride R* for 15 min. Filter and carefully evaporate the filtrate to dryness on a water-bath. Dissolve the residue in 2 mL of *toluene R*.

Reference solution. Dissolve 20 µL of *eugenol R* in 2 mL of *toluene R*.

Plate: *TLC silica gel GF_{254} plate R*.

Mobile phase: *toluene R*.

Application: 10 µL of the reference solution and 20 µL of the test solution, as bands of 20 mm by 3 mm.

Development: twice, in an unsaturated tank over a path of 10 cm; allow the plate to stand for 5 min between the 2 developments.

Drying: in air.

Detection A: examine in ultraviolet light at 254 nm and mark the quenching zones.

Herbal drugs

Results A: in the chromatogram obtained with the test solution there is in the median part a quenching zone due to eugenol similar in position to the quenching zone in the chromatogram obtained with the reference solution and there may be a weak quenching zone due to acetyleugenol just below the zone due to eugenol.

Detection B: spray with *anisaldehyde solution R* using 10 mL for a plate 200 mm square and heat at 100-105 °C for 5-10 min. Examine in daylight.

Results B: the zones due to eugenol in the chromatograms obtained with the test and reference solutions are strong brownish-violet and the zone due to acetyleugenol in the chromatogram obtained with the test solution is faint violet-blue. In the chromatogram obtained with the test solution there are other coloured zones, particularly a faint red zone in the lower part and a reddish-violet zone due to caryophyllene in the upper part.

TESTS

Foreign matter (*2.8.2*): maximum 6 per cent of peduncles, petioles and fruits, maximum 2 per cent of deteriorated cloves and maximum 0.5 per cent of other foreign matter.

Total ash (*2.4.16*): maximum 7.0 per cent.

ASSAY

Essential oil (*2.8.12*). Use a 250 mL flask, 100 mL of *water R* as the distillation liquid and 0.50 mL of *xylene R* in the graduated tube. Grind 5.0 g of the drug with 5.0 g of *diatomaceous earth R* to form a fine, homogeneous powder and proceed immediately with the determination using 4.0 g of the mixture. Distil at a rate of 2.5-3.5 mL/min for 2 h.

01/2008:1091
corrected 7.6

CLOVE OIL

Caryophylli floris aetheroleum

DEFINITION

Essential oil obtained by steam distillation from the dried flower buds of *Syzygium aromaticum* (L.) Merr. et L.M.Perry (syn. *Eugenia caryophyllus* (Spreng.) Bullock et S.G.Harrison).

CHARACTERS

Appearance: clear, yellow liquid, which becomes brown when exposed to air.

Solubility: miscible with methylene chloride, with toluene and with fatty oils.

IDENTIFICATION

First identification: B.

Second identification: A.

A. Thin-layer chromatography (*2.2.27*).

Test solution. Dissolve 20 µL of the substance to be examined in 2.0 mL of *toluene R*.

Reference solution. Dissolve 15 µL of *eugenol R* and 15 µL of *acetyleugenol R* in 2.0 mL of *toluene R*.

Plate: *TLC silica gel F_{254} plate R*.

Mobile phase: *toluene R*.

Application: 20 µL of the test solution and 15 µL of the reference solution, as bands.

Development: twice in an unsaturated tank over a path of 10 cm; allow to stand for 5 min between the 2 developments.

Drying: in air.

Detection A: examine in ultraviolet light at 254 nm and mark the quenching zones.

Results A: the chromatogram obtained with the test solution shows in the middle part a quenching zone (eugenol) that is similar in position to the quenching zone in the chromatogram obtained with the reference solution; just below, there is a weak quenching zone (acetyleugenol) that is similar in position to the zone of acetyleugenol in the chromatogram obtained with the reference solution.

Detection B: spray with *anisaldehyde solution R* and examine in daylight while heating at 100-105 °C for 5-10 min.

Results B: the zone due to eugenol in the chromatograms obtained with the test and reference solutions is strong brownish-violet and the zone due to acetyleugenol in the chromatogram obtained with the test solution is faint violet-blue; in the chromatogram obtained with the test solution there are other coloured zones, particularly a faint red zone in the lower part and a reddish-violet zone (β-caryophyllene) in the upper part.

B. Examine the chromatograms obtained in the test for chromatographic profile.

Results: the 3 principal peaks in chromatogram obtained with the test solution are similar in retention time to the 3 principal peaks in the chromatogram obtained with the reference solution.

TESTS

Relative density (*2.2.5*): 1.030 to 1.063.

Refractive index (*2.2.6*): 1.528 to 1.537.

Optical rotation (*2.2.7*): – 2° to 0°.

Fatty oils and resinified essential oils (*2.8.7*). It complies with the test.

Solubility in alcohol (*2.8.10*). 1.0 mL is soluble in 2.0 mL and more of *ethanol (70 per cent V/V) R*.

Chromatographic profile. Gas chromatography (*2.2.28*): use the normalisation procedure.

Test solution. Dissolve 0.2 g of the substance to be examined in 10 g of *hexane R*.

Reference solution. Dissolve 7 mg of *β-caryophyllene R*, 80 mg of *eugenol R* and 4 mg of *acetyleugenol R* in 10 g of *hexane R*.

Column:

- *material*: fused silica;
- *size*: *l* = 60 m, Ø = about 0.25 mm;
- *stationary phase*: *macrogol 20 000 R*.

Carrier gas: *helium for chromatography R*.

Flow rate: 1.5 mL/min.

Split ratio: 1:100.

Temperature:

	Time (min)	Temperature (°C)
Column	0 - 8	60
	8 - 48	60 → 180
	48 - 53	180
Injection port		270
Detector		270

Detection: flame ionisation.

Injection: 1.0 µL.

Elution order: order indicated in the composition of the reference solution. Record the retention times of these substances.

System suitability: reference solution:

- *resolution*: minimum 1.5 between the peaks due to eugenol and acetyleugenol;
- *number of theoretical plates*: minimum 30 000, calculated for the peak due to β-caryophyllene at 110 °C.

Herbal drugs

Identification of components: using the retention times determined from the chromatogram obtained with the reference solution, locate the components of the reference solution on the chromatogram obtained with the test solution.

Determine the percentage content of each of these components. The limits are within the following ranges:

- *β-caryophyllene*: 5.0 per cent to 14.0 per cent;
- *eugenol*: 75.0 per cent to 88.0 per cent;
- *acetyleugenol*: 4.0 per cent to 15.0 per cent.

STORAGE

Protected from heat.

01/2013:2454

COIX SEED

Coicis semen

DEFINITION

Dried, ripe, caryopsis, freed from the shell, of *Coix lacryma-jobi* L. subsp. *ma-yuen* (Rom. Caill.) T.Koyama.

Content: minimum 0.50 per cent of triolein ($C_{57}H_{104}O_6$; M_r 885) (dried drug).

IDENTIFICATION

A. The white or pale yellow caryopsis freed from the shell is roughly ovoid or elongated-elliptical, about 4-8 mm long and 3-6 mm wide. The dorsal surface is rounded, milky white and smooth; the ventral surface shows a deep longitudinal furrow; yellowish-brown remnants of the membranous floral parts may be present. One end is obtusely rounded, the other end is relatively flat and slightly dented with an indistinct, pale brown hilum.

B. Microscopic examination (*2.8.23*). The powder is light grey or light brown. Examine under a microscope using *chloral hydrate solution R*. The powder shows the following diagnostic characters: fragments of endosperm with polygonal cells arranged in a network; fragments of epicarp with elongated, slightly sinuous cells; cells of the middle layer of the pericarp are yellowish-brown, irregularly tube-like, slightly curved and are irregularly crossed. Examine under a microscope using a 50 per cent *V/V* solution of *glycerol R*. The powder shows very numerous starch granules, simple or 2-3 compound, spherical or slightly polyhedral, 3-20 µm in diameter, with a stellate, Y-shaped, cleft-like or point-like hilum.

C. Thin-layer chromatography (*2.2.27*).

Test solution. To 1 g of the powdered herbal drug (710) (*2.9.12*) add 10 mL of *light petroleum R1* and sonicate for 30 min. Filter and reduce *in vacuo* to 1 mL.

Reference solution. Dissolve 2 mg of *oleic acid R* and 2 mg of *triolein R* in *methanol R* and dilute to 1 mL with the same solvent.

Plate: *TLC octadecylsilyl silica gel plate R* (5-40 µm) [or *TLC octadecylsilyl silica gel plate R* (2-10 µm)].

Mobile phase: *methylene chloride R*, *glacial acetic acid R*, *acetone R* (20:40:50 *V/V/V*).

Application: 10 µL [or 2 µL] as bands of 10 mm [or 8 mm].

Development: over a path of 7 cm.

Drying: in air.

Detection: treat with a 100 g/L solution of *phosphomolybdic acid R* in *ethanol (96 per cent) R*, heat at 120 °C for about 3 min and examine in daylight.

Results: see below the sequence of zones present in the chromatograms obtained with the reference solution and the test solution. Furthermore, other faint zones may be present in the chromatogram obtained with the test solution.

Top of the plate	
	A purple zone
Oleic acid: a purple zone	A purple zone (oleic acid)
	A faint purple zone
	A purple zone
	A purple zone
Triolein: a purple zone	A purple zone (triolein)
Reference solution	**Test solution**

TESTS

Loss on drying (*2.2.32*): maximum 12.0 per cent, determined on 1.000 g of the powdered herbal drug (710) (*2.9.12*) by drying in an oven at 105 °C for 2 h.

Total ash (*2.4.16*): maximum 3.0 per cent.

ASSAY

Liquid chromatography (*2.2.29*).

Test solution. To 0.600 g of the powdered herbal drug (355) (*2.9.12*) add 50 mL of the mobile phase and stir with a magnetic stirrer for 2 h. Sonicate for 30 min. Allow to cool, dilute to 50.0 mL with the mobile phase and filter.

Reference solution (a). Dissolve 10.0 mg of *triolein CRS* in the mobile phase and dilute to 50.0 mL with the mobile phase.

Reference solution (b). To 0.600 g of *coix seed HRS* add 50 mL of the mobile phase and stir with a magnetic stirrer for 2 h. Sonicate for 30 min. Allow to cool, dilute to 50.0 mL with the mobile phase and filter.

Reference solutions (c), (d), (e), (f), (g), (h). Dilute reference solution (a) to obtain 6 reference solutions of triolein, the concentrations of which span the expected value in the test solution.

Column:

- *size*: *l* = 0.25 m, Ø = 4.6 mm;
- *stationary phase*: *end-capped octadecylsilyl silica gel for chromatography R* (5 µm).

Mobile phase: *methylene chloride R*, *acetonitrile R* (35:65 *V/V*).

Flow rate: 2.0 mL/min.

Detection: evaporative light-scattering detector; the following settings have been found to be suitable; if the detector has different setting parameters, adjust the detector settings so as to comply with the system suitability criterion for signal-to-noise ratio:

- *carrier gas*: *nitrogen R*;
- *flow rate*: 0.8 mL/min;
- *evaporator temperature*: 100 °C.

Injection: 10 µL.

Run time: 35 min.

Retention time: triolein = about 18 min.

Herbal drugs

System suitability:

- *resolution*: minimum 1.5 between the peak due to triolein and peak 2 in the chromatogram obtained with reference solution (b); use the chromatogram supplied with *coix seed HRS* to identify peak 2;
- *signal-to-noise ratio*: minimum 30 for the peak due to triolein in the chromatogram obtained with reference solution (a).

Establish a calibration curve with the logarithm of the mass of triolein (in milligrams) per 50 mL of reference solutions (c), (d), (e), (f), (g) and (h) (corrected by the assigned percentage content of *triolein CRS*) as the abscissa and the logarithm of the corresponding peak area as the ordinate.

Calculate the percentage content of triolein using the following expression:

$$\frac{10^A}{m \times 10}$$

A = logarithm of the mass of triolein in the test solution, determined from the calibration curve and the area of the corresponding peak in the chromatogram obtained with the test solution;

m = mass of the herbal drug to be examined used to prepare the test solution, in grams.

01/2008:1504 corrected 6.0

COLA

Colae semen

DEFINITION

Whole or fragmented dried seeds, freed from the testa, of *Cola nitida* (Vent.) Schott et Endl. (*C. vera* K. Schum.) and its varieties, as well as of *Cola acuminata* (P. Beauv.) Schott et Endl. (*Sterculia acuminata* P. Beauv.).

Content: minimum 1.5 per cent of caffeine (M_r 194.2) (dried drug).

IDENTIFICATION

A. The kernels have an oblong, somewhat obtuse, sub-tetragonal shape, with deformations resulting from mutual pressure inside the fruit; they vary in size and mass, ranging from 5-15 g; the outside is hard, smooth and very dark brown, the inside is more reddish-brown. In *C. nitida* and its varieties, the kernels are divided in 2 parts, almost plano-convex, corresponding to the cotyledons and usually occurring separated in the commercial drug; the cotyledons are 3-4 cm long, 2-2.5 cm wide and 1-2 cm thick. In *C. acuminata*, the cotyledons are smaller and divided into 4-6 irregular parts.

B. Reduce to a powder (355) (*2.9.12*). The powder is reddish-brown. Examine under a microscope using a 50 per cent *V/V* solution of *glycerol R*. The powder shows the following diagnostic characters: numerous ovoid or reniform starch granules, 5-25 µm in size, with concentric striations and a stellate, slightly eccentric hilum; fragments of cotyledon tissue showing large, thick-walled, reddish polygonal cells filled with starch granules; occasional fragments of the external epidermis of the cotyledons.

C. Thin-layer chromatography (*2.2.27*).

Test solution. To 1.0 g of the powdered herbal drug (355) (*2.9.12*) add 5 mL of *ethanol (60 per cent V/V) R*. Shake mechanically at 40 °C for 30 min and filter.

Reference solution (a). Dissolve 25 mg of *caffeine R* in 10 mL of *ethanol (60 per cent V/V) R*.

Reference solution (b). Dissolve 50 mg of *theobromine R* in 10 mL of the mobile phase. Filter.

Plate: *TLC silica gel F_{254} plate R*.

Mobile phase: *water R*, *methanol R*, *ethyl acetate R* (10:13:77 *V/V/V*).

Application: 20 µL, as bands.

Development: over a path of 10 cm.

Drying: in air for 5 min.

Detection A: examine in ultraviolet light at 254 nm.

Results A: the chromatogram obtained with the test solution shows 2 principal quenching zones which are similar in position to the zones in the chromatograms obtained with reference solutions (a) and (b).

Detection B: spray with a mixture of equal volumes of *ethanol (96 per cent) R* and *hydrochloric acid R* and then with a solution prepared immediately before use by dissolving 1 g of *iodine R* and 1 g of *potassium iodide R* in 100 mL of *ethanol (96 per cent) R*.

Results B: the chromatogram obtained with the test solution shows a reddish-brown principal zone similar in position and colour to the zone in the chromatogram obtained with reference solution (a).

TESTS

Loss on drying (*2.2.32*): maximum 12.0 per cent, determined on 2.00 g of the powdered herbal drug (355) (*2.9.12*) by drying in an oven at 105 °C for 2 h.

Total ash (*2.4.16*): maximum 9.0 per cent.

ASSAY

Liquid chromatography (*2.2.29*).

Test solution. To 1.00 g (m_1) of the powdered herbal drug (355) (*2.9.12*), add 50 mL of *methanol R*. Heat under a reflux condenser on a water-bath for 30 min. Allow to cool and filter. Rinse the filter with 10 mL of *methanol R*. Take up the residue with 50 mL of *methanol R*. Proceed as before. Combine the filtrates and the washings in a 200.0 mL volumetric flask and dilute to 200.0 mL with *methanol R*. Transfer 20.0 mL of this solution into a round-bottomed flask and evaporate to dryness under reduced pressure. Take up the residue with the mobile phase, transfer to a 50.0 mL volumetric flask and dilute to 50.0 mL with the mobile phase.

Reference solution. In a 100.0 mL volumetric flask, dissolve 30.0 mg (m_2) of *caffeine CRS* and 15.0 mg of *theobromine R* in the mobile phase and dilute to 100.0 mL with the mobile phase. Transfer 10.0 mL of this solution to a 100.0 mL volumetric flask and dilute to 100.0 mL with the mobile phase.

Column:

- *size*: l = 0.25 m, Ø = 4.6 mm;
- *stationary phase*: *octadecylsilyl silica gel for chromatography R* (5 µm).

Mobile phase: *methanol R*, *water R* (25:75 *V/V*).

Flow rate: 1 mL/min.

Detection: spectrophotometer at 272 nm.

Injection: the chosen volume of each solution; loop injector.

System suitability: reference solution:

- *resolution*: minimum 2.5 between the peaks due to caffeine and theobromine. If necessary, adjust the volume of *water R* in the mobile phase.

Calculate the caffeine content using the following expression:

$$\frac{m_2 \times A_1 \times 50}{m_1 \times A_2}$$

Herbal drugs

A_1 = area of the peak due to caffeine in the chromatogram obtained with the test solution;

A_2 = area of the peak due to caffeine in the chromatogram obtained with the reference solution;

m_1 = mass of the herbal drug to be examined in the test solution, in grams;

m_2 = mass of *caffeine CRS* in the reference solution, in grams.

01/2008:1862

COLOPHONY

Colophonium

DEFINITION

Residue remaining after distillation of the volatile oil from the oleoresin obtained from various species of *Pinus*.

IDENTIFICATION

A. Translucent, pale yellow to brownish-yellow, angular, irregularly-shaped, brittle, glassy pieces of different sizes the surfaces of which bear conchoidal markings.

B. Thin-layer chromatography (*2.2.27*).

Test solution. Dissolve 1 g in 10 mL of *methanol R* by gently warming.

Reference solution. Dissolve 10 mg of *thymol R* and 10 mg of *linalol R* in 10 mL of *methanol R*.

Plate: *TLC silica gel plate R*.

Mobile phase: *methylene chloride R*.

Application: 10 µL, as bands.

Development: over a path of 15 cm.

Drying: in air.

Detection: spray with *anisaldehyde solution R* and heat at 100-105 °C for 10 min; examine in daylight.

Results: see below the sequence of the zones present in the chromatograms obtained with the reference solution and the test solution. Furthermore, other coloured zones are present in the chromatogram obtained with the test solution.

Top of the plate	
	A purple band
	A purple band
_____	_____
	2 purple bands
Thymol: an orange band	
_____	_____
Linalol: a purple band	Sequence of narrow purple bands
	Purple extended baseline band
Reference solution	**Test solution**

TESTS

Acid value (*2.5.1*): 145 to 180, determined on 1.0 g.

Total ash (*2.4.16*): maximum 0.2 per cent.

STORAGE

Do not reduce to a powder.

01/2013:2439
corrected 7.7

COMMON SELFHEAL FRUIT-SPIKE

Prunellae spica

DEFINITION

Dried fruit-spike of *Prunella vulgaris* L.

Content: minimum 0.12 per cent of the sum of oleanolic acid ($C_{30}H_{48}O_3$; M_r 456.7) and ursolic acid ($C_{30}H_{48}O_3$; M_r 456.7), expressed as ursolic acid, of which not less than 70.0 per cent consists of ursolic acid (dried drug).

IDENTIFICATION

A. Cylindrical, somewhat flattened, 1.5-8 cm long, 0.8-1.5 cm in diameter, accompanied by remains of the stem up to 15 cm long, pale brown or brownish-red. The whole spike is composed of up to 10 or more whorls of persistent calyx and bracts, each whorl with 2 opposite bracts, fan-shaped, apex acuminate, striations of vein distinct, the outer surface with white hairs. Each bract is accompanied by 3 flowers, with a persistent bilabiate calyx, and whose corolla is often missing, and by 4 small brown ovoid nutlets, white and convex at the acute end. Calyx closed in the fruit stage.

B. Microscopic examination (*2.8.23*). The powder is reddish-brown or brown. Examine under a microscope using *chloral hydrate solution R*. The powder shows the following diagnostic characters: very numerous covering trichomes, multicellular, scattered, usually broken, sometimes exceeding 1 mm long and 125 µm wide at the base, with spiny walls, upper cell usually short and acuminate, fine needle-shaped crystals may be visible in the cells; fragments of the bracts, in surface view, with lobed epidermal cells, trichomes mostly unicellular and occasionally bi- or tricellular, conical, acute, short, serrate; diacytic stomata (*2.8.3*) usually accompanied by 2 subsidiary cells very unequal in size and rare glandular trichomes with a unicellular stalk and a bicellular head; fragments of the bracts and/or calyx margins with numerous serrate trichomes pointing towards the same direction; fragments of the calyx, in surface view, composed of lobed cells strongly thickened and deeply grooved; fragments of reticulate or bordered pitted vessels from the stems; rare fragments of the nucules having a pericarp composed of palisade-like mucilaginous cells accompanied by polygonal cells with thickened walls and granular coloured contents; fragments of endosperm with oily contents; very numerous oil droplets; glandular trichomes of laminaceous type with 4 secretory cells may be present.

C. Thin-layer chromatography (*2.2.27*).

Test solution. To 0.5 g of the powdered herbal drug (355) (*2.9.12*) add 5 mL of *methanol R*, sonicate for 10 min and centrifuge; use the supernatant.

Reference solution. Dissolve 1 mg of *β-sitosterol R* and 1 mg of *ursolic acid R* in 2 mL of *methanol R*.

Plate: *TLC silica gel F_{254} plate R* (5-40 µm) [or *TLC silica gel F_{254} plate R* (2-10 µm)].

Mobile phase: *glacial acetic acid R*, *ethyl acetate R*, *cyclohexane R* (0.5:8:20 *V/V/V*).

Application: 10 µL [or 4 µL] as bands of 10 mm [or 8 mm].

Development: over a path of 12 cm [or 6 cm].

Drying: in air.

Detection: treat with a 10 per cent *V/V* solution of *sulfuric acid R* in *anhydrous ethanol R* and heat at 100 °C for 3 min; examine in ultraviolet light at 365 nm.

Herbal drugs

Results: see below the sequence of zones present in the chromatograms obtained with the reference solution and the test solution. Furthermore, other faint zones may be present in the chromatogram obtained with the test solution.

Top of the plate	
	A pale violet fluorescent zone
———	———
	2 faint yellow fluorescent zones
β-sitosterol: a violet fluorescent zone	
Ursolic acid: a yellowish-orange fluorescent zone	A yellowish-orange fluorescent zone (ursolic acid)
———	———
	2 faint green fluorescent zones
Reference solution	**Test solution**

TESTS

Foreign matter (*2.8.2*): maximum 5 per cent of stems longer than 15 cm and maximum 2 per cent of other foreign matter.

Loss on drying (*2.2.32*): maximum 12.0 per cent, determined on 1.000 g of the powdered herbal drug (355) (*2.9.12*) by drying in an oven at 105 °C.

Total ash (*2.4.16*): maximum 12.0 per cent.

Ash insoluble in hydrochloric acid (*2.8.1*): maximum 4.0 per cent.

ASSAY

Liquid chromatography (*2.2.29*).

Solvent mixture: *methanol R*, *1,1-dimethylethyl methyl ether R* (20:80 *V/V*).

Test solution. Disperse 2.000 g of the powdered herbal drug (355) (*2.9.12*) in 20 mL of the solvent mixture, heat under reflux at 80 °C for 30 min and filter. Repeat the extraction twice. Combine the filtrates and dilute to 100.0 mL with the solvent mixture. Evaporate 50.0 mL of this solution to dryness at 40 °C. Dissolve the residue in 1.0 mL of *1,1-dimethylethyl methyl ether R*. Rinse the flask 4 times with 1.0 mL of *1,1-dimethylethyl methyl ether R*. Pre-condition a 3 mL solid phase extraction column, containing 500 mg of *aminopropylsilyl silica gel for chromatography R1*, using 2 mL of *methanol R* followed by 2 mL of *1,1-dimethylethyl methyl ether R*. Subsequently apply the solution and the washings to the pre-conditioned column. Wash the column with 1.0 mL of *1,1-dimethylethyl methyl ether R* followed by 5 quantities, each of 1.0 mL, of *methanol R*. Apply 1.0 mL of a 2 per cent *V/V* solution of *anhydrous formic acid R* in *methanol R* and elute after 5 min. Repeat the elution 3 times and dilute the eluates to 5.0 mL with a 2 per cent *V/V* solution of *anhydrous formic acid R* in *methanol R*.

Solution A. Dissolve 10.0 mg of *ursolic acid CRS* in *methanol R* and dilute to 10.0 mL with the same solvent.

Reference solution (a). Dilute 1.0 mL of solution A to 10.0 mL with a 2 per cent *V/V* solution of *anhydrous formic acid R* in *methanol R*.

Reference solution (b). Dissolve 10.0 mg of *oleanolic acid R* in *methanol R* and dilute to 10.0 mL with the same solvent. Mix 1.0 mL of the solution and 1.0 mL of solution A and dilute to 10.0 mL with a 2 per cent *V/V* solution of *anhydrous formic acid R* in *methanol R*.

Column:

- *size*: *l* = 0.15 m, Ø = 4.6 mm;
- *stationary phase*: *octadecylsilyl silica gel for chromatography R* (5 µm).

Mobile phase: mix 25 volumes of a 4.6 g/L solution of *ammonium dihydrogen phosphate R* adjusted to pH 6.0 with *strong sodium hydroxide solution R*, 35 volumes of *methanol R1* and 40 volumes of *acetonitrile R1*.

Flow rate: 1.0 mL/min.

Detection: spectrophotometer at 205 nm.

Injection: 20 µL.

Run time: 1.1 times the retention time of ursolic acid.

Elution order: oleanolic acid, ursolic acid.

Relative retention with reference to ursolic acid (retention time = about 28 min): oleanolic acid = about 0.9.

System suitability: reference solution (b):

- *resolution*: minimum 1.5 between the peaks due to oleanolic acid and ursolic acid.

Calculate the percentage contents of ursolic acid and oleanolic acid, expressed as ursolic acid, using the following equations:

$$n_1 = \frac{A_1 \times m_2 \times p \times 0.1}{A_2 \times m_1}$$

$$n_2 = \frac{A_3 \times m_2 \times p \times 0.1}{A_2 \times m_1}$$

n_1 = percentage content of ursolic acid;

n_2 = percentage content of oleanolic acid;

A_1 = area of the peak due to ursolic acid in the chromatogram obtained with the test solution;

A_2 = area of the peak due to ursolic acid in the chromatogram obtained with reference solution (a);

A_3 = area of the peak due to oleanolic acid in the chromatogram obtained with the test solution;

m_1 = mass of the herbal drug to be examined used to prepare the test solution, in grams;

m_2 = mass of *ursolic acid CRS* used to prepare solution A, in grams;

p = assigned percentage content of ursolic acid in *ursolic acid CRS*.

Calculate the sum of the percentage contents of ursolic acid and oleanolic acid ($n_1 + n_2$) and the relative content of ursolic acid using the following expression:

$$\frac{n_1 \times 100}{(n_1 + n_2)}$$

07/2012:1304

CORIANDER

Coriandri fructus

DEFINITION

Dried cremocarp of *Coriandrum sativum* L.

Content: minimum 3 mL/kg of essential oil (dried drug).

IDENTIFICATION

A. The fruit is brown or light brown, more or less spherical, about 1.5-5 mm in diameter, or oval and 2-6 mm long. It consists of the entire cremocarp, with the mericarps usually tightly connected. The fruit is glabrous and has 10 wavy, slightly raised primary ridges and 8 straight, more prominent secondary ridges. The mericarps are concave on the internal surface. The stylopod crowns the apex and a small fragment of the pedicel may be present.

B. Microscopic examination (*2.8.23*). The powder is brown. Examine under a microscope using *chloral hydrate solution R*. The powder shows the following diagnostic characters (Figure 1304.-1): numerous oil droplets [B]; fragments of endosperm [A] with small,

Herbal drugs

thick-walled, regular cells containing microrosettes [Aa] and microcrystals of calcium oxalate and oil droplets [Ab]; fragments of endocarp, in surface view [C, J] or in transverse section [H], with very narrow cells having a parquetry arrangement [Ca, Ha] and usually associated with a layer of thin-walled [Cb, Hb] or thicker-walled [Ja] rectangular sclereids of the mesocarp; fragments from the sclerenchymatous layer of the mesocarp [G] with short, strongly thickened, pitted, fusiform cells occurring in layers with the cells of adjacent layers approximately at right angles to one another; fragments of parenchyma of the mesocarp in transverse section [E] with small cells with slightly thickened walls [Ea], the remains of secretory canals [Eb] and sclereids [Ec]; fragments of epicarp, in surface view [F], with thin-walled polyhedral cells, some of which contain small prisms of calcium oxalate [Fa]; rare fragments of secretory canals with brown cells, in surface view [D]; occasional fragments of vascular bundles [K].

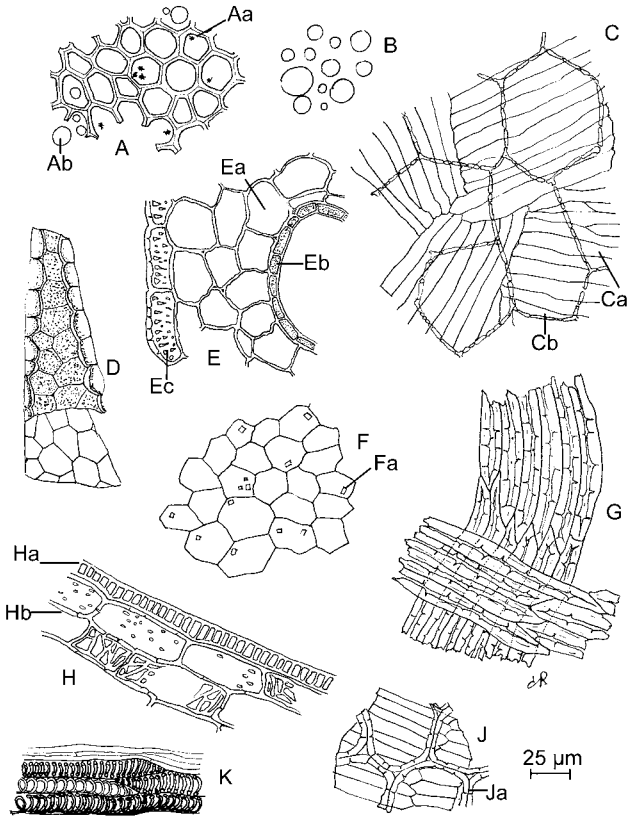

Figure 1304.-1. – *Illustration for identification test B of powdered herbal drug of coriander*

C. Thin-layer chromatography (*2.2.27*).

Test solution. Shake 0.5 g of the freshly powdered herbal drug (355) (*2.9.12*) with 5 mL of *hexane R* for 2-3 min and filter over 2 g of *anhydrous sodium sulfate R*.

Reference solution. Dissolve 15 µL of *linalol R* and 25 µL of *olive oil R* in 5 mL of *hexane R* immediately before use.

Plate: *TLC silica gel plate R*.

Mobile phase: *ethyl acetate R*, *toluene R* (5:95 *V/V*).

Application: 20 µL of the test solution and 10 µL of the reference solution, as bands.

Development: twice over a path of 10 cm.

Drying: in air.

Detection: spray with *anisaldehyde solution R* and examine in daylight while heating at 100-105 °C for 5-10 min.

Results: the chromatogram obtained with the reference solution shows in the lower half a violet or greyish-violet zone (linalol) and in the upper half a bluish-violet zone (triglycerides); the chromatogram obtained with the test solution shows zones similar in position and colour to the zones in the chromatogram obtained with the reference solution; several violet-grey or brownish zones, including the zone due to geraniol, are shown between the point of application and the zone due to linalol in the chromatogram obtained with the reference solution; several faint violet-grey zones may also be shown between the zone due to triglycerides and that due to linalol in the chromatogram obtained with the reference solution.

TESTS

Foreign matter (*2.8.2*). It complies with the test. None of the cremocarps show perforations due to insects.

Loss on drying (*2.2.32*): maximum 10.0 per cent, determined on 1.000 g of the powdered herbal drug (355) (*2.9.12*) by drying in an oven at 105 °C for 2 h.

Total ash (*2.4.16*): maximum 8.0 per cent.

ASSAY

Essential oil (*2.8.12*). Use a 500 mL round-bottomed flask, 200 mL of *water R* as the distillation liquid and 0.5 mL of *xylene R* in the graduated tube. Reduce the drug to a coarse powder and immediately use 30.0 g for the determination. Distil at a rate of 2-3 mL/min for 2 h.

01/2008:1820

CORIANDER OIL

Coriandri aetheroleum

DEFINITION

Essential oil obtained by steam distillation from the fruits of *Coriandrum sativum* L.

CHARACTERS

Appearance: clear, colourless or pale yellow liquid.

Characteristic spicy odour.

IDENTIFICATION

First identification: *B*.

Second identification: *A*.

A. Examine by thin-layer chromatography (*2.2.27*).

Test solution. Dissolve 10 µL of the substance to be examined in 1.0 mL of *toluene R*.

Reference solution. Dissolve 10 µL *linalol R* and 2 µL of *geranyl acetate R* in 1.0 mL of *toluene R*.

Plate: *TLC silica gel plate R*.

Mobile phase: *ethyl acetate R*, *toluene R* (5:95 *V/V*).

Application: 10 µL as bands.

Development: over a path of 10 cm.

Drying: in air.

Detection: spray with *anisaldehyde solution R* and heat at 100-105 °C for 10-15 min. Examine immediately in daylight.

Results: see below the sequence of the zones present in the chromatograms obtained with the reference solution and the test solution.

Top of the plate	
Geranyl acetate: a violet-blue zone	A violet-blue zone (geranyl acetate)
Linalol: an intense violet zone	An intense violet zone (linalol) A violet-blue zone (geraniol)
Reference solution	**Test solution**

Herbal drugs

B. Examine the chromatograms obtained in the test for chromatographic profile.

Results: the characteristic peaks in the chromatogram obtained with the test solution are similar in retention time to those in the chromatogram obtained with the reference solution.

TESTS

Relative density (*2.2.5*): 0.860 to 0.880.

Refractive index (*2.2.6*): 1.462 to 1.470.

Optical rotation (*2.2.7*): + 7° to + 13°.

Acid value (*2.5.1*): maximum 3.0, determined on 5.00 g of the substance to be examined.

Chromatographic profile. Gas chromatography (*2.2.28*): use the normalisation procedure.

Test solution. The substance to be examined.

Reference solution (a). Dissolve 10 µL of *α-pinene R*, 10 µL of *limonene R*, 10 µL of *γ-terpinene R*, 10 µL of *p-cymene R*, 10 mg of *camphor R*, 20 µL of *linalol R*, 10 µL of *α-terpineol R*, 10 µL of *geranyl acetate R* and 10 µL of *geraniol R* in 1 mL of *hexane R*.

Reference solution (b). Dissolve 5 µL of *geraniol R* in *hexane R* and dilute to 10 mL with the same solvent.

Column:

- *material*: fused silica,
- *size*: *l* = 60 m, Ø = 0.25 mm,
- *stationary phase*: *macrogol 20 000 R* (film thickness 0.25 µm).

Carrier gas: *helium for chromatography R*.

Flow rate: 1 mL/min.

Split ratio: 1:65.

Temperature:

	Time (min)	Temperature (°C)
Column	0 - 10	60
	10 - 75	60 → 190
	75 - 120	190
Injection port		220
Detector		240

Detection: flame ionisation.

Injection: 0.2 µL.

Elution order: order indicated in the composition of reference solution (a). Record the retention times of these substances.

System suitability: reference solution (a):

- *resolution*: minimum 1.5 between the peaks due to linalol and camphor.

Using the retention times determined from the chromatogram obtained with reference solution (a), locate the components of reference solution (a) in the chromatogram obtained with the test solution.

Determine the percentage content of each of these components. The percentages are within the following ranges:

- *α-pinene*: 3.0 per cent to 7.0 per cent,
- *limonene*: 1.5 per cent to 5.0 per cent,
- *γ-terpinene*: 1.5 per cent to 8.0 per cent,
- *p-cymene*: 0.5 per cent to 4.0 per cent,
- *camphor*: 3.0 per cent to 6.0 per cent,
- *linalol*: 65.0 per cent to 78.0 per cent,
- *α-terpineol*: 0.1 per cent to 1.5 per cent,
- *geranyl acetate*: 0.5 per cent to 4.0 per cent,
- *geraniol*: 0.5 per cent to 3.0 per cent,
- *disregard limit*: area of the peak in the chromatogram obtained with reference solution (b) (0.05 per cent).

Chiral purity. Gas chromatography (*2.2.28*).

Test solution. Dissolve 0.02 g of the substance to be examined in *pentane R* and dilute to 10 mL with the same solvent.

Reference solution. Dissolve 10 µL of *linalol R* and 5 mg of *borneol R* in *pentane R* and dilute to 10 mL with the same solvent.

Column:

- *material*: fused silica,
- *size*: *l* = 25 m, Ø = 0.25 mm,
- *stationary phase*: *modified β-cyclodextrin for chiral chromatography R* (film thickness 0.25 µm).

Carrier gas: *helium for chromatography R*.

Flow rate: 1.3 mL/min.

Split ratio: 1:30.

Temperature:

	Time (min)	Temperature (°C)
Column	0 - 65	50 → 180
Injection port		230
Detector		230

Detection: flame ionisation.

Injection: 1 µL.

System suitability: reference solution:

- *resolution*: minimum 5.5 between the peaks due to (*R*)-linalol (1st peak) and (*S*)-linalol (2nd peak) and minimum 2.9 between the peaks due to (*S*)-linalol and borneol (3rd peak).

Limit: calculate the percentage content of (*R*)-linalol from the expression:

$$\frac{A_R}{A_S + A_R} \times 100$$

A_S = area of the peak due to (*S*)-linalol,

A_R = area of the peak due to (*R*)-linalol.

- *(R)-linalol*: maximum 14 per cent.

STORAGE

At a temperature not exceeding 25 °C.

04/2011:1306

COUCH GRASS RHIZOME

Graminis rhizoma

DEFINITION

Whole or cut, washed and dried rhizome of *Agropyron repens* (L.) P.Beauv. (*Elymus repens* (L.) Gould); the adventitious roots are removed.

IDENTIFICATION

A. The shiny yellowish, light brown or yellowish-brown pieces of the rhizome are 2-3 mm thick and longitudinally furrowed. At the nodes are the remains of very thin, more or less branched roots and whitish or brownish scale-like leaves; the internodes, up to 6 cm long, are furrowed and hollow inside. The transverse section of the nodes shows a yellowish medulla.

B. Microscopic examination (*2.8.23*). The powder is whitish-yellow. Examine under a microscope using *chloral hydrate solution R*. The powder shows the following diagnostic characters (Figure 1306.-1): fragments of the epidermis in surface view [A] covered with a thick cuticle and composed of rectangular and elongated, thick-walled cells with pitted, slightly wavy walls, which usually alternate with small, thin-walled, rounded or almost square twin

Herbal drugs

cells; fragments in transverse section [B] showing the epidermis [Ba] associated with thick-walled cells of the hypodermis; fragments in transverse section [F] consisting of endodermic cells with U-shaped thickening of the walls [Fa] accompanied by pericyclic fibres [Fb]; numerous fragments of moderately thickened fibres [C]; groups of vessels [D, G] with slit-shaped pits [Da] or with spiral and annular thickening [Ga], accompanied by fibres [Db, Gb]; numerous fragments of the cortical parenchyma and the pith with slightly thickened and pitted cells [E].

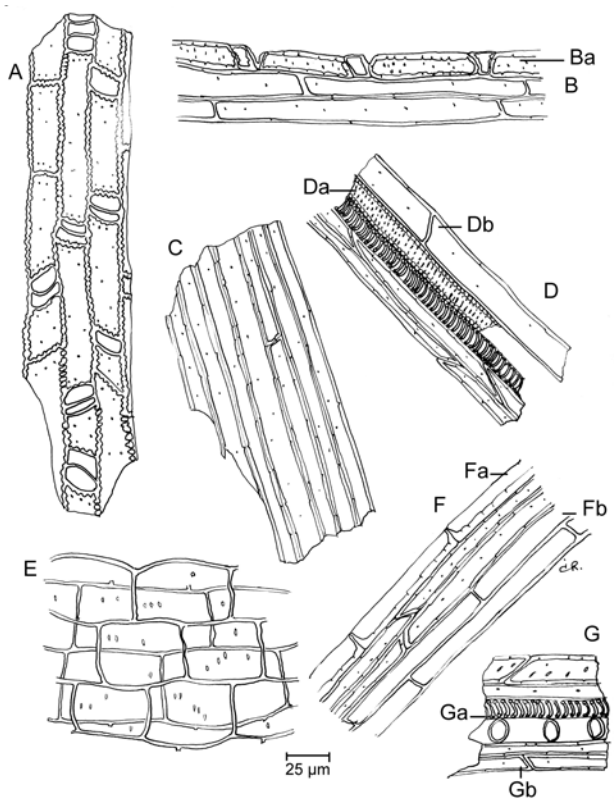

Figure 1306.-1. – *Illustration for identification test B of powdered herbal drug of couch grass rhizome*

TESTS

Cynodon dactylon, Imperata cylindrica. Examine under a microscope using *iodine solution R1*. No blue starch grains are visible.

Foreign matter (*2.8.2*): maximum 15 per cent of blackish-grey pieces of rhizome in the cut herbal drug.

Water-soluble extractive: minimum 25 per cent.

To 5.0 g of the powdered herbal drug (355) (*2.9.12*) add 200 mL of boiling *water R*. Allow to stand for 10 min, shaking occasionally. Allow to cool, dilute to 200.0 mL with *water R* and filter. Evaporate 20.0 mL of the filtrate to dryness on a water-bath. Dry the residue in an oven at 100-105 °C. The residue weighs a minimum of 0.125 g.

Loss on drying (*2.2.32*): maximum 12.0 per cent, determined on 1.000 g of the powdered herbal drug (355) (*2.9.12*) by drying in an oven at 105 °C for 2 h.

Total ash (*2.4.16*): maximum 5.0 per cent.

Ash insoluble in hydrochloric acid (*2.8.1*): maximum 1.5 per cent.

07/2012:1851

DANDELION HERB WITH ROOT

Taraxaci officinalis herba cum radice

DEFINITION

Mixture of whole or fragmented, dried aerial and underground parts of *Taraxacum officinale* F.H. Wigg.

CHARACTERS

Bitter taste.

IDENTIFICATION

A. The underground parts consist of dark brown or blackish fragments 2-3 cm long, deeply wrinkled longitudinally on the outer surface. The thickened crown shows many scars left by the rosette of leaves. The fracture is short. A transverse section shows a greyish-white or brownish cortex containing concentric layers of brownish laticiferous vessels and a porous, pale yellow, non-radiate wood. Leaf fragments are green, glabrous or densely pilose. They are crumpled and usually show a clearly visible midrib on the inner surface. The lamina, with deeply dentate margins, is crumpled. The solitary flower heads, on hollow stems, consist of an involucre of green, foliaceous bracts surrounding the yellow florets, all of which are ligulate; a few achenes bearing a white, silky, outspread pappus may be present.

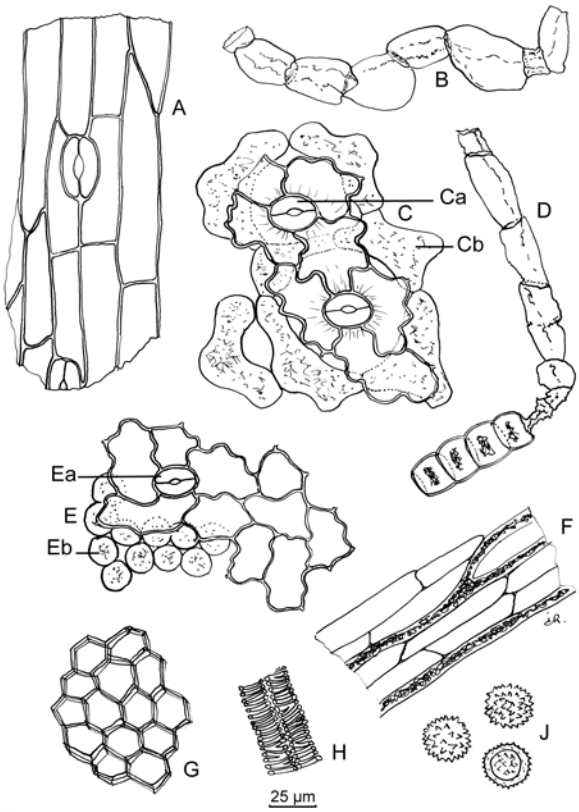

Figure 1851.-1. – *Illustration for identification test B of powdered herbal drug of dandelion herb with root*

B. Microscopic examination (*2.8.23*). The powder is yellowish-brown. Examine under a microscope using *chloral hydrate solution R*. The powder shows the following diagnostic characters (Figure 1851.-1): fragments of cork [G] with flattened, thin-walled cells; reticulate lignified vessels [H] from the roots; fragments of parenchyma containing branched laticiferous vessels [F]; fragments of leaves, in surface view, showing upper [E] and lower [C] epidermises consisting of interlocking lobed cells

Herbal drugs

and anomocytic stomata (*2.8.3*) [Ca, Ea]; elongated, multicellular covering trichomes with constrictions, which are more or less abundant depending on the variety or sub-variety [B, D]; fragments of the upper [E] epidermis usually accompanied by underlying palisade parenchyma [Eb] and fragments of the lower [C] epidermis accompanied by underlying spongy parenchyma [Cb]; lignified, spirally or annularly thickened vessels; fragments of flower-stem epidermis with stomata and rigid-walled, elongated cells [A]; pollen grains with a pitted exine [J]. Examine under a microscope using *glycerol R*. The powder shows angular, irregular inulin fragments, free or included in the parenchyma cells.

C. Thin-layer chromatography (*2.2.27*).

Test solution. To 2.0 g of the powdered herbal drug (355) (*2.9.12*) add 10 mL of *methanol R*. Heat in a water-bath at 60 °C or sonicate for 10 min. Cool and filter.

Reference solution. Dissolve 2 mg of *chlorogenic acid R* and 2 mg of *rutin R* in *methanol R* and dilute to 20 mL with the same solvent.

Plate: *TLC silica gel plate R* (5-40 µm) [or *TLC silica gel plate R* (2-10 µm)].

Mobile phase: *anhydrous formic acid R*, *water R*, *ethyl acetate R* (10:10:80 *V/V/V*).

Application: 20 µL [or 5 µL] as bands of 10 mm [or 8 mm].

Development: over a path of 12 cm [or 7 cm].

Drying: in air.

Detection: heat at 100 °C for 5 min; spray with or dip briefly into a 10 g/L solution of *diphenylboric acid aminoethyl ester R* in *methanol R* and dry at 100 °C for 5 min; spray with or dip briefly into a 50 g/L solution of *macrogol 400 R* in *methanol R*; heat at 100 °C for 5 min and examine in ultraviolet light at 365 nm.

Results: see below the sequence of zones present in the chromatograms obtained with the reference solution and the test solution. Furthermore, other faint zones may be present in the chromatogram obtained with the test solution.

Top of the plate	
	A faint red zone
	A faint yellow zone
———	———
Chlorogenic acid: a blue zone	2 light blue zones
———	———
Rutin: a yellowish-brown zone	
	A light blue zone
Reference solution	**Test solution**

TESTS

Loss on drying (*2.2.32*): maximum 10.0 per cent, determined on 1.000 g of the powdered herbal drug (355) (*2.9.12*) by drying in an oven at 105 °C for 2 h.

Total ash (*2.4.16*): maximum 17.0 per cent.

Ash insoluble in hydrochloric acid (*2.8.1*): maximum 5.0 per cent.

Extractable matter: minimum 30.0 per cent.

To 2.000 g of the powdered herbal drug (250) (*2.9.12*) add 40 g of *water R*. Stir for 1 h and filter. Evaporate 10 g of the filtrate to dryness on a water-bath and dry in an oven at 100-105 °C for 2 h. The residue weighs a minimum of 0.15 g.

Bitterness value (*2.8.15*): minimum 100.

01/2011:1852

DANDELION ROOT

Taraxaci officinalis radix

DEFINITION

Whole or cut, dried underground parts of *Taraxacum officinale* F.H.Wigg.

CHARACTERS

Bitter taste.

IDENTIFICATION

A. The dark brown or blackish taproot shows little branching and is deeply wrinkled longitudinally on the outer surface. The thickened crown shows many scars left by the rosette of leaves. The fracture is short. A transverse section shows a greyish-white or brownish cortex containing concentric layers of brownish laticiferous vessels and a porous, pale yellow, non-radiate wood.

B. Reduce to a powder (355) (*2.9.12*). The powder is yellowish-brown. Examine under a microscope using *chloral hydrate solution R*. The powder shows the following diagnostic characters (Figure 1852.-1): fragments of brown or reddish-brown cork, in surface view [G] and transverse section [C] with flattened, thin-walled cells [Ca], sometimes accompanied by parenchyma [Cb]; reticulate lignified vessels [E, J, M]; fragments of parenchyma [A, D, K, L], some containing branched laticiferous vessels, in longitudinal section [Ka] and transverse section [Da]; granular contents of laticiferous vessels [B, H]. Examine under a microscope using *glycerol R*. The powder shows numerous irregular, angular inulin fragments, free [F] or included in the parenchyma cells [La].

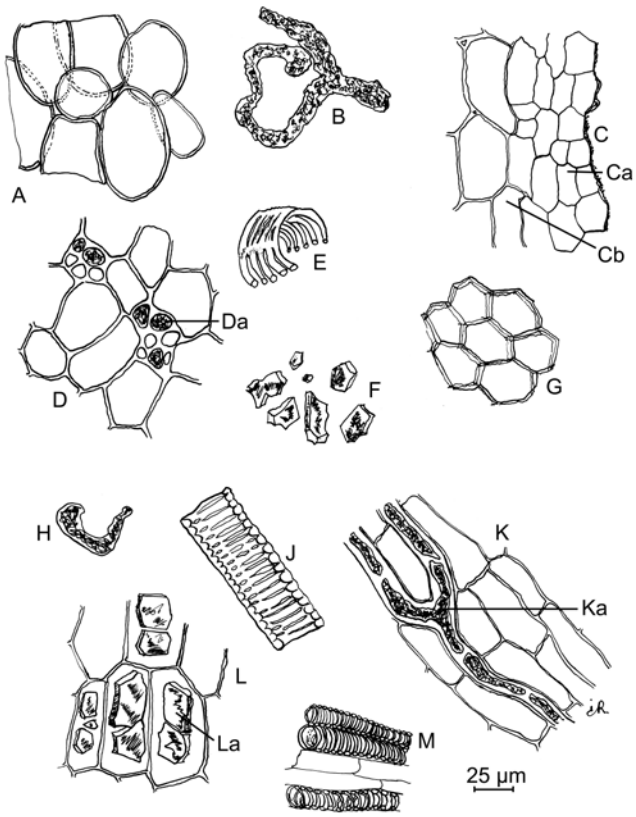

Figure 1852.-1. – *Illustration for identification test B of powdered herbal drug of dandelion root*

Herbal drugs

C. Thin-layer chromatography (*2.2.27*).

Test solution. To 2.0 g of the powdered herbal drug (355) (*2.9.12*) add 10 mL of *methanol R*. Heat in a water-bath at 60 °C or sonicate for 10 min. Cool and filter.

Reference solution. Dissolve 2 mg of *chlorogenic acid R* and 2 mg of *rutin R* in *methanol R* and dilute to 20 mL with the same solvent.

Plate: *TLC silica gel F_{254} plate R* (5-40 µm) [or *TLC silica gel F_{254} plate R* (2-10 µm)].

Mobile phase: *anhydrous formic acid R*, *water R*, *ethyl acetate R* (10:10:80 *V/V/V*).

Application: 20 µL [or 5 µL] as bands of 10 mm [or 8 mm].

Development: over a path of 12 cm [or 7 cm].

Drying: in air.

Detection: heat at 100 °C for 5 min; spray with or dip briefly into a 10 g/L solution of *diphenylboric acid aminoethyl ester R* in *methanol R* and dry at 100 °C for 5 min; spray with or dip briefly into a 50 g/L solution of *macrogol 400 R* in *methanol R*; heat at 100 °C for 5 min and examine in ultraviolet light at 365 nm.

Results: see below the sequence of zones present in the chromatograms obtained with the reference solution and the test solution. Furthermore, other faint zones may be present in the chromatogram obtained with the test solution.

Top of the plate	
	A light blue zone
Chlorogenic acid: a blue zone	A blue zone (chlorogenic acid)
Rutin: a yellowish-brown zone	
Reference solution	**Test solution**

TESTS

Loss on drying (*2.2.32*): maximum 10.0 per cent, determined on 1.000 g of the powdered herbal drug (355) (*2.9.12*) by drying in an oven at 105 °C for 2 h.

Total ash (*2.4.16*): maximum 10.0 per cent.

Ash insoluble in hydrochloric acid (*2.8.1*): maximum 3.0 per cent.

Extractable matter: minimum 20.0 per cent.

To 2.000 g of the powdered herbal drug (250) (*2.9.12*) add 40 g of *water R*. Stir for 1 h and filter. Evaporate 10 g of the filtrate to dryness on a water-bath and dry in an oven at 100-105 °C for 2 h. The residue weighs a minimum of 0.10 g.

Bitterness value (*2.8.15*): minimum 100.

01/2008:1871

DEVIL'S CLAW DRY EXTRACT

Harpagophyti extractum siccum

DEFINITION

Dry extract obtained from *Devil's claw root (1095)*.

Content: minimum 1.5 per cent of harpagoside ($C_{24}H_{30}O_{11}$; M_r 494.5) (dried extract).

PRODUCTION

The extract is produced from the herbal drug by an appropriate procedure using either water or a hydroalcoholic solvent that is at most equivalent in strength to ethanol (95 per cent *V/V*).

CHARACTERS

Appearance: light brown powder.

IDENTIFICATION

Thin-layer chromatography (*2.2.27*).

Test solution. To 1.0 g of the extract to be examined add 10 mL of *methanol R* and heat in a water-bath at 60 °C for 10 min. Cool and filter.

Reference solution. Dissolve 1.0 mg of *harpagoside R* and 2.5 mg of *fructose R* in 1.0 mL of *methanol R*.

Plate: *TLC silica gel plate R*.

Mobile phase: *water R*, *methanol R*, *ethyl acetate R* (8:15:77 *V/V/V*).

Application: 20 µL as bands.

Development: over a path of 10 cm.

Drying: in a current of warm air.

Detection: spray with a 10 g/L solution of *phloroglucinol R* in *ethanol (96 per cent) R* and then with *hydrochloric acid R*; heat at 80 °C for 5-10 min and examine in daylight.

Results: see below the sequence of zones present in the chromatograms obtained with the reference solution and the test solution. Furthermore, other faint zones may be present in the chromatogram obtained with the test solution.

Top of the plate	
Harpagoside: a green zone	A green zone (harpagoside)
	A yellow zone
	A light green zone
Fructose: a yellowish-grey zone	A yellowish-grey zone may be present (fructose)
	A brown zone
Reference solution	**Test solution**

ASSAY

Liquid chromatography (*2.2.29*).

Test solution. Introduce 0.350 g of the extract to be examined into a 100 mL volumetric flask, add 90 mL of *methanol R* and sonicate for 20 min. Cool to room temperature, dilute to 100.0 mL with *methanol R* and filter through a membrane filter (nominal pore size 0.2 µm).

Reference solution. Dissolve the contents of 1 vial of *harpagoside CRS* in *methanol R* and dilute to 10.0 mL with the same solvent.

Column:

- *size*: *l* = 0.10 m, Ø = 4.0 mm;
- *stationary phase*: *octadecylsilyl silica gel for chromatography R* (5 µm).

Mobile phase: *methanol R*, *water R* (50:50 *V/V*).

Flow rate: 1.5 mL/min.

Detection: spectrophotometer at 278 nm.

Injection: 10 µL.

Run time: 3 times the retention time of harpagoside.

Retention time: harpagoside = about 7 min.

Herbal drugs

Calculate the percentage content of harpagoside using the following expression:

$$\frac{A_1 \times m_2 \times 1000}{A_2 \times m_1}$$

A_1 = area of the peak due to harpagoside in the chromatogram obtained with the test solution;

A_2 = area of the peak due to harpagoside in the chromatogram obtained with the reference solution;

m_1 = mass of the extract to be examined used to prepare the test solution, in grams;

m_2 = mass of harpagoside contained in 1 vial of *harpagoside CRS*, in grams.

01/2011:1095

DEVIL'S CLAW ROOT

Harpagophyti radix

DEFINITION

Cut and dried, tuberous secondary roots of *Harpagophytum procumbens* DC. and/or *Harpagophytum zeyheri* Decne.

Content: minimum 1.2 per cent of harpagoside ($C_{24}H_{30}O_{11}$; M_r 494.5) (dried drug).

CHARACTERS

The root is greyish-brown or dark brown.

IDENTIFICATION

A. It consists of thick, fan-shaped or rounded slices or of roughly crushed discs. The darker outer surface is traversed by tortuous longitudinal wrinkles. The paler cut surface shows a dark cambial zone and xylem bundles distinctly aligned in radial rows. The central cylinder shows fine concentric striations. Seen under a lens, the cut surface presents yellow or brownish-red granules.

B. Reduce to a powder (355) (*2.9.12*). The powder is brownish-yellow. Examine under a microscope using *chloral hydrate solution R*. The powder shows the following diagnostic characters (Figure 1095.-1): fragments of cork consisting of yellowish-brown, thin-walled cells, in surface view [B] and in transverse section [C]; fragments of cortical parenchyma consisting of large, thin-walled cells [E, K, N, P], sometimes containing reddish-brown granular inclusions and isolated yellow droplets (P); fragments of reticulately thickened or pitted vessels [D, F, G, M] and fragments of lignified parenchyma [L], sometimes associated with vessels, from the central cylinder; prism crystals [A] and rare small needles of calcium oxalate in the parenchyma. The powder may also show rectangular or polygonal sclereids with dark reddish-brown contents [H, J]. With a solution of phloroglucinol in hydrochloric acid, the parenchyma turns green.

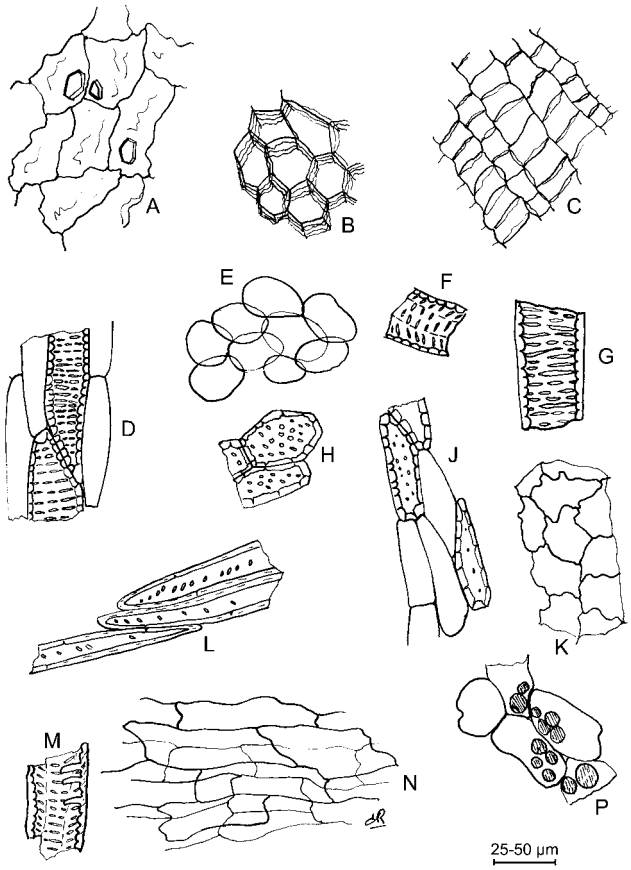

Figure 1095.-1. – *Illustration for identification test B of powdered herbal drug of devil's claw root*

C. Thin-layer chromatography (*2.2.27*).

Test solution. Heat 1.0 g of the powdered herbal drug (355) (*2.9.12*) with 10 mL of *methanol R* on a water-bath at 60 °C for 10 min. Filter and reduce the filtrate to about 2 mL under reduced pressure at a temperature not exceeding 40 °C.

Reference solution. Dissolve 1 mg of *harpagoside R* and 2.5 mg of *fructose R* in 1 mL of *methanol R*.

Plate: *TLC silica gel plate R* (5-40 µm) [or *TLC silica gel plate R* (2-10 µm)].

Mobile phase: *water R*, *methanol R*, *ethyl acetate R* (8:15:77 *V/V/V*).

Application: 20 µL [or 5 µL] as bands.

Development: over a path of 10 cm [or 7.5 cm].

Drying: in a current of warm air.

Detection A: examine in ultraviolet light at 254 nm.

Results A: see below the sequence of zones present in the chromatograms obtained with the reference solution and the test solution; the chromatogram obtained with the test solution shows other distinct zones, mainly above the zone due to harpagoside. Furthermore, other faint zones may be present in the chromatogram obtained with the test solution.

Top of the plate	
Harpagoside: a quenching zone	A quenching zone: harpagoside
Reference solution	**Test solution**

Detection B: spray with a 10 g/L solution of *phloroglucinol R* in *ethanol (96 per cent) R* and then with *hydrochloric acid R*; heat at 80 °C for 5-10 min and examine in daylight.

Herbal drugs

Results B: see below the sequence of zones present in the chromatograms obtained with the reference solution and the test solution; the chromatogram obtained with the test solution also shows several yellow or brown zones above the zone due to harpagoside. Furthermore, other faint zones may be present in the chromatogram obtained with the test solution.

Top of the plate	
Harpagoside: a green zone	A green zone (harpagoside)
	A yellow zone
	A light green zone
Fructose: a yellowish-grey zone	A yellowish-grey zone may be present (fructose)
	A brown zone
Reference solution	**Test solution**

TESTS

Starch. Examine the powdered herbal drug (355) (*2.9.12*) under a microscope using *water R*. Add *iodine solution R1*. No blue colour develops.

Loss on drying (*2.2.32*): maximum 12.0 per cent, determined on 1.000 g of the powdered herbal drug (355) (*2.9.12*) by drying in an oven at 105 °C.

Total ash (*2.4.16*): maximum 10.0 per cent.

ASSAY

Liquid chromatography (*2.2.29*).

Test solution. To 0.500 g of the powdered herbal drug (355) (*2.9.12*) add 100.0 mL of *methanol R*. Shake for 4 h and filter through a membrane filter (nominal pore size 0.45 µm).

Reference solution. Dissolve the contents of a vial of *harpagoside CRS* in *methanol R* and dilute to 10.0 mL with the same solvent.

Column:

- *size*: *l* = 0.10 m, Ø = 4.0 mm;
- *stationary phase*: *octadecylsilyl silica gel for chromatography R* (5 µm).

Mobile phase: *methanol R*, *water R* (50:50 *V/V*).

Flow rate: 1.5 mL/min.

Detection: spectrophotometer at 278 nm.

Injection: 10 µL.

Run time: 3 times the retention time of harpagoside.

Retention time: harpagoside = about 7 min.

Calculate the percentage content of harpagoside using the following expression:

$$\frac{m_2 \times A_1 \times 1000}{A_2 \times m_1}$$

A_1 = area of the peak due to harpagoside in the chromatogram obtained with the test solution;

A_2 = area of the peak due to harpagoside in the chromatogram obtained with the reference solution;

m_1 = mass of the herbal drug to be examined used to prepare the test solution, in grams;

m_2 = mass of *harpagoside CRS* in the reference solution, in grams.

07/2013:0117

DIGITALIS LEAF

Digitalis purpureae folium

DEFINITION

Dried leaf of *Digitalis purpurea* L.

Content: minimum 0.3 per cent of cardenolic glycosides, expressed as digitoxin (M_r 765) (dried drug).

CHARACTERS

Faint but characteristic odour.

The whole leaf is about 10-40 cm long and 4-15 cm wide. The lamina is ovate lanceolate or broadly ovate. The winged petiole is from 1/4 as long as to equal in length to the lamina.

IDENTIFICATION

A. The leaf is brittle and often occurs broken. The upper surface is green and the lower surface is greyish-green. The apex is subacute and the margin is irregularly crenate, dentate or serrate. The base is decurrent. The venation is pinnate, the lateral veins being prominent especially on the lower surface, leaving the midrib at about 45° and anastomosing near the margin; a veinlet terminates in each tooth of the margin and the lower veins run down the winged petiole. The upper surface is rugose and pubescent; the lower surface shows a network of raised veinlets and is densely pubescent.

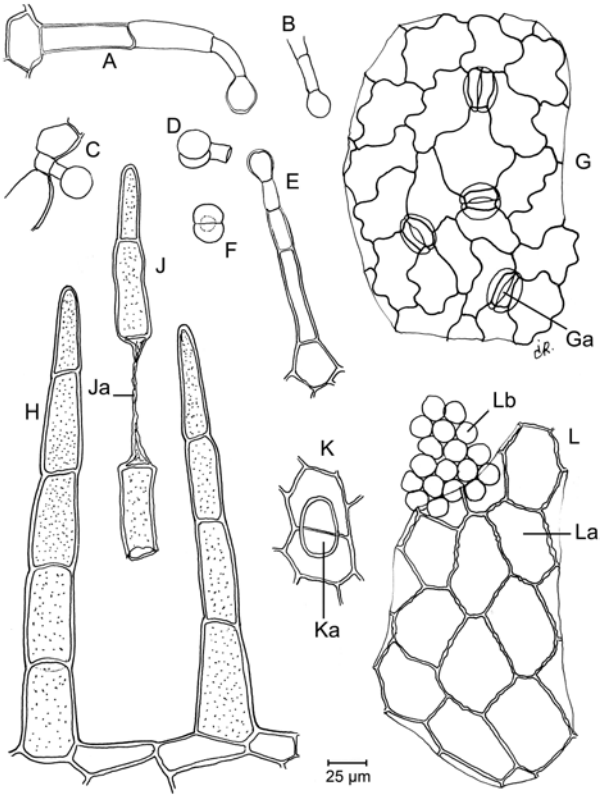

Figure 0117.-1. – *Illustration for identification test B of powdered herbal drug of digitalis leaf*

B. Microscopic examination (*2.8.23*). Examine under a microscope using *chloral hydrate solution R*. The powder shows the following diagnostic characters (Figure 0117.-1): fragments of the upper epidermis, in surface view [K, L], with cells with a smooth cuticle and anticlinal walls that are slightly thickened, are straight or slightly sinuous, and may show slight beading and pitting [La] and sometimes scars of covering trichomes [Ka], accompanied by underlying palisade parenchyma [Lb]; fragments of the lower epidermis, in surface view [G], with markedly sinuous cells

Herbal drugs

and anomocytic stomata (*2.8.3*) [Ga]; trichomes are of 2 types: a) uniseriate covering trichomes with blunt apex, usually consisting of 3-5 cells [H, J], often with 1 or more collapsed cells [Ja], walls mostly finely warty or faintly striated; b) glandular trichomes usually with a unicellular [C, D], sometimes a multicellular, uniseriate [A, B, E] stalk and a unicellular head [A, B, C, E] or bicellular head, in side view [D] and in surface view [F] or exceptionally a tetracellular head.

C. Thin-layer chromatography (*2.2.27*).

Test solution. To 1.0 g of the powdered herbal drug (180) (*2.9.12*) add a mixture of 20 mL of *ethanol (50 per cent V/V) R* and 10 mL of *lead acetate solution R*. Boil for 2 min, allow to cool and centrifuge. Shake the supernatant solution with 2 quantities, each of 15 mL, of *chloroform R*; separate the 2 layers by centrifugation if necessary. Dry the chloroform layers over *anhydrous sodium sulfate R* and filter. Evaporate 10 mL of the solution to dryness on a water-bath and dissolve the residue in 1 mL of a mixture of equal volumes of *chloroform R* and *methanol R*.

Reference solution. Dissolve 5 mg of *purpureaglycoside A CRS*, 2 mg of *purpureaglycoside B CRS*, 5 mg of *digitoxin R* and 2 mg of *gitoxin R* in a mixture of equal volumes of *chloroform R* and *methanol R*, then dilute to 10 mL with the same mixture of solvents.

Plate: *TLC silica gel G plate R*.

Mobile phase: *water R*, *methanol R*, *ethyl acetate R* (7.5:10:75 *V/V/V*).

Application: 20 µL as bands of 2 cm by 0.3 cm.

Development: over a path of 10 cm.

Drying: until the solvents have evaporated.

Detection: treat with a mixture of 2 volumes of a 10 g/L solution of *chloramine R* and 8 volumes of a 250 g/L solution of *trichloroacetic acid R* in *ethanol (96 per cent) R*, then heat at 100-105 °C for 10 min; examine in ultraviolet light at 365 nm.

Results: the chromatogram obtained with the reference solution shows a zone of light blue fluorescence in the lower part of the chromatogram, due to purpureaglycoside B, and, just above it, a zone of brownish-yellow fluorescence due to purpureaglycoside A; a zone of light blue fluorescence, due to gitoxin, appears in the middle of the chromatogram and above it a zone of brownish-yellow fluorescence, due to digitoxin; the zones in the chromatogram obtained with the test solution are similar in position, colour and size to the zones in the chromatogram obtained with the reference solution. Other zones of fluorescence may also appear in the chromatogram obtained with the test solution.

D. Evaporate 5 mL of the chloroformic solution obtained in identification test C to dryness on a water-bath. To the residue add 2 mL of *dinitrobenzoic acid solution R* and 1 mL of *1 M sodium hydroxide*. A reddish-violet colour develops within 5 min.

E. Evaporate 5 mL of the chloroformic solution obtained in identification test C to dryness on a water-bath. To the residue add 3 mL of *xanthydrol solution R* and heat on a water-bath for 3 min. A red colour develops.

TESTS

***Digitalis lanata* Ehrh.** The presence of leaves with few or no trichomes and with parallel venation or the presence of cells of the abaxial epidermis with beaded anticlinal walls and of cells of the adaxial epidermis with numerous stomata indicates adulteration by *Digitalis lanata* Ehrh.

Loss on drying (*2.2.32*): maximum 6.0 per cent, determined on 1.000 g of the powdered herbal drug (355) (*2.9.12*) by drying in an oven at 105 °C.

Total ash (*2.4.16*): maximum 12.0 per cent.

Ash insoluble in hydrochloric acid (*2.8.1*): maximum 5.0 per cent.

ASSAY

Shake 0.250 g of the powdered herbal drug (180) (*2.9.12*) with 50.0 mL of *water R* for 1 h. Add 5.0 mL of a 150 g/L solution of *lead acetate R*, shake, and after a few minutes add 7.5 mL of a 40 g/L solution of *disodium hydrogen phosphate R*. Filter through a pleated paper filter. Heat 50.0 mL of the filtrate with 5 mL of hydrochloric acid (150 g/L HCl) under a reflux condenser on a water-bath for 1 h. Transfer to a separating funnel, rinse the flask with 2 quantities, each of 5 mL, of *water R* and shake with 3 quantities, each of 25 mL, of *chloroform R*. Dry the combined chloroform layers over *anhydrous sodium sulfate R* and dilute to 100.0 mL with *chloroform R*. Evaporate 40.0 mL of the chloroformic solution to dryness, dissolve the residue in 7 mL of *ethanol (50 per cent V/V) R*, add 2 mL of *dinitrobenzoic acid solution R* and 1 mL of *1 M sodium hydroxide*. At the same time prepare a reference solution as follows. Dissolve 50.0 mg of *digitoxin CRS* in *ethanol (96 per cent) R* and dilute to 50.0 mL with the same solvent. Dilute 5.0 mL of the solution to 50.0 mL with *ethanol (96 per cent) R*. To 5.0 mL of the resulting solution add 25 mL of *water R* and 3 mL of hydrochloric acid (150 g/L HCl). Heat the solution under a reflux condenser on a water-bath for 1 h and complete the preparation as described above. Measure the absorbance (*2.2.25*) of the 2 solutions at 540 nm several times during the first 12 min until the maximum is reached, using as the compensation liquid a mixture of 7 mL of *ethanol (50 per cent V/V) R*, 2 mL of *dinitrobenzoic acid solution R* and 1 mL of *1 M sodium hydroxide*.

From the absorbances measured and the concentrations of the solutions, calculate the content of cardenolic glycosides, expressed as digitoxin.

STORAGE

Protected from moisture.

01/2008:1510
corrected 7.5

DOG ROSE

Rosae pseudo-fructus

DEFINITION

Rose hips made up by the receptacle and the remains of the dried sepals of *Rosa canina* L., *R. pendulina* L. and other *Rosa* species, with the achenes removed.

Content: minimum 0.3 per cent of ascorbic acid ($C_6H_8O_6$; M_r 176.1) (dried drug).

IDENTIFICATION

A. It consists of fragments of the fleshy, hollow, urceolate receptacle, bearing the remains of the reduced sepals, light pink or orange-pink, the convex outer surface shiny and strongly wrinkled; bearing on its lighter inner surface abundant bristle-like hairs.

B. Reduce to a powder (355) (*2.9.12*). The powder is orange-yellow. Examine under a microscope using *chloral hydrate solution R*. The powder shows the following diagnostic characters: numerous fragments of receptacle, the outer epidermis with orange-yellow contents and a thick cuticle, the inner epidermis composed of thin-walled cells containing cluster crystals and occasional prisms of calcium oxalate; scattered lignified cells, isodiametric, with thickened and pitted walls forming the trichome bases; abundant unicellar trichomes, up to 2 mm long and 30-45 µm thick, tapering towards each end, walls heavily thickened and with a waxy cuticle which may show fissures in a spiral arrangement; numerous oily orange-yellow globules.

C. Thin-layer chromatography (*2.2.27*).

Test solution. To 5 g of the powdered herbal drug (355) (*2.9.12*) add 25 mL of *ethanol (96 per cent) R*, shake for 30 min and filter.

Reference solution. Dissolve 10 mg of *ascorbic acid R* in 5.0 mL of *ethanol (60 per cent V/V) R*.

Plate: *TLC silica gel F_{254} plate R*.

Mobile phase: *acetone R*, *glacial acetic acid R*, *methanol R*, *toluene R* (5:5:20:70 *V/V/V/V*).

Application: 20 µL of the test solution and 2 µL of the reference solution.

Development: over a path of 15 cm.

Drying: in air.

Detection A: examine in ultraviolet light at 254 nm.

Results A: the chromatogram obtained with the test solution shows a quenching zone similar in position to the principal zone in the chromatogram obtained with the reference solution.

Detection B: spray with a 0.2 g/L solution of *dichlorophenolindophenol, sodium salt R* in *ethanol (96 per cent) R*. Examine in daylight.

Results B: the chromatogram obtained with the test solution shows a white zone on a pink background (ascorbic acid) similar in position and colour to the principal zone in the chromatogram obtained with the reference solution. The chromatogram also shows an intense orange-yellow zone near the solvent front and a yellow zone in the upper third (carotenoids).

TESTS

Foreign matter (*2.8.2*): maximum 1 per cent.

Loss on drying (*2.2.32*): maximum 10.0 per cent, determined on 1.000 g of the powdered herbal drug (355) (*2.9.12*) by drying in an oven at 105 °C.

Total ash (*2.4.16*): maximum 7.0 per cent.

ASSAY

Test solution. In a round-bottomed flask, weigh 0.500 g of the freshly powdered herbal drug (710) (*2.9.12*). Add a solution of 1.0 g of *oxalic acid R* in 50.0 mL of *methanol R*. Boil under a reflux condenser for 10 min, and cool in iced water until the temperature reaches 15-20 °C. Filter. Transfer 2.0 mL of the filtrate to a 50 mL conical flask. Add successively, with gentle shaking after each addition, 2.0 mL of *dichlorophenolindophenol standard solution R* and then, exactly 60 s later, 0.5 mL of a 100 g/L solution of *thiourea R* in *ethanol (50 per cent V/V) R* and 0.7 mL of *dinitrophenylhydrazine-sulfuric acid solution R*. Heat under a reflux condenser at 50 °C for 75 min, and place immediately in iced water for 5 min. Add dropwise 5.0 mL of a mixture of 12 mL of *water R* and 50 mL of *sulfuric acid R*, taking care to carry out the addition over a period of minimum 90 s and maximum 120 s while maintaining vigorous stirring in iced water. Allow to stand for 30 min at room temperature and measure the absorbance (*2.2.25*) at 520 nm using solution A as compensation liquid.

Solution A. Treat 2.0 mL of the filtrate obtained during the preparation of the test solution as described but adding the *dinitrophenylhydrazine-sulfuric acid solution R* just before the absorbance is measured.

Reference solution. Dissolve 40.0 mg of *ascorbic acid R* in a freshly prepared 20 g/L solution of *oxalic acid R* in *methanol R* and dilute to 100.0 mL with the same solvent. Dilute 5.0 mL of this solution to 100.0 mL with a freshly prepared 20 g/L solution of *oxalic acid R* in *methanol R*. Treat 2.0 mL of the solution as described above for the filtrate obtained during the preparation of the test solution. Measure the absorbance (*2.2.25*) at 520 nm using solution B as the compensation liquid.

Solution B. Treat 2.0 mL of the reference solution as described above for solution A.

Calculate the percentage content of ascorbic acid from the following expression:

$$\frac{2.5 \times A_1 \times m_2}{A_2 \times m_1}$$

A_1 = absorbance of the test solution;

A_2 = absorbance of the reference solution;

m_1 = mass of the substance to be examined, in grams;

m_2 = mass of ascorbic acid used, in grams.

07/2012:2563

DRYNARIA RHIZOME

Drynariae rhizoma

DEFINITION

Dried rhizome of *Drynaria fortunei* (Kunze) J. Sm. The ramenta may be removed.

Content: minimum 0.5 per cent of naringin ($C_{27}H_{32}O_{14}$; M_r 580.5) (dried drug).

IDENTIFICATION

A. Long, flattened, slat-shaped rhizome, often curved and branched, 5-15 cm long and 1-1.5 cm thick. The surface is either completely covered in scaly, dark brown hairs (rhizome with ramenta) or glabrous with dark brown dots (rhizome without ramenta). The upper surface and both sides show circular frond scars, rarely the frond bases. The lower surface shows scars or the remains of fibrous roots. The texture is light, fragile, easily broken. The section is reddish-brown; the steles form a ring of small yellow dots.

B. Microscopic examination (*2.8.23*). The powder is reddish-brown. Examine under a microscope using *chloral hydrate solution R*. The powder shows the following diagnostic characters: numerous parenchyma fragments, consisting of polyhedral cells with slightly and regularly thickened and pitted walls; scalariform lignified vessels of variable diameter up to 60 µm; fragments of scaly hairs forming a tissue consisting of many reddish-brown cells forming expansions on the margins (rhizome with ramenta).

C. Thin-layer chromatography (*2.2.27*).

Test solution. To 0.5 g of the powdered herbal drug (355) (*2.9.12*) add 5 mL of *methanol R* and sonicate for 10 min. Cool, centrifuge and use the supernatant.

Reference solution. Dissolve 1 mg of *naringin R* and 1 mg of *hyperoside R* in 2 mL of *methanol R*.

Plate: *TLC silica gel plate R* (2-10 µm).

Mobile phase: *acetic acid R*, *anhydrous formic acid R*, *water R*, *ethyl acetate R* (11:11:26:100 *V/V/V/V*).

Application: 10 µL as bands of 8 mm.

Development: over a path of 6 cm.

Drying: in air.

Detection: treat with *aluminium chloride reagent R*; examine in ultraviolet light at 365 nm.

Results: see below the sequence of zones present in the chromatograms obtained with the reference solution and the test solution. Furthermore, other faint zones may be present in the chromatogram obtained with the test solution.

Top of the plate	
_____	_____
Hyperoside: a yellow zone	
Naringin: a bluish-white zone	A bluish-white zone (naringin)
	A bluish-white zone
_____	_____
Reference solution	**Test solution**

TESTS

Loss on drying (*2.2.32*): maximum 13.0 per cent, determined on 1.000 g of the powdered herbal drug (355) (*2.9.12*) by drying in an oven at 105 °C for 2 h.

Total ash (*2.4.16*): maximum 7.0 per cent.

Ash insoluble in hydrochloric acid (*2.8.1*): maximum 2.0 per cent.

ASSAY

Liquid chromatography (*2.2.29*).

Test solution. Disperse 0.100 g of the powdered herbal drug (355) (*2.9.12*) in a 50 per cent *V/V* solution of *methanol R* and dilute to 10.0 mL with the same solvent. Weigh, sonicate for 45 min. Allow to cool, weigh and compensate the loss of solvent with a 50 per cent *V/V* solution of *methanol R*, shake well. Filter through a membrane filter (nominal pore size 0.45 µm).

Reference solution (a). Dissolve 10.0 mg of *naringin CRS* in *methanol R* and dilute to 20.0 mL with the same solvent.

Reference solution (b). Dissolve 5.0 mg of *neohesperidin R* in reference solution (a) and dilute to 10.0 mL with reference solution (a).

Reference solution (c). Dilute 1.0 mL of reference solution (a) to 10.0 mL with *methanol R*.

Column:

- *size*: *l* = 0.15 m, Ø = 4.6 mm;
- *stationary phase*: *octadecylsilyl silica gel for chromatography R* (5 µm).

Mobile phase: *acetonitrile R*, 0.4 per cent *V/V* solution of *acetic acid R* (18:82 *V/V*).

Flow rate: 1.0 mL/min.

Detection: spectrophotometer at 283 nm.

Injection: 20 µL of the test solution and reference solutions (b) and (c).

Run time: twice the retention time of naringin.

Retention time: naringin = about 9 min; neohesperidin = about 12 min.

System suitability: reference solution (b):

- *resolution*: minimum 5.0 between the peaks due to naringin and neohesperidin.

Calculate the percentage content of naringin using the following expression:

$$\frac{A_1 \times m_2 \times p}{A_2 \times m_1 \times 20}$$

A_1 = area of the peak due to naringin in the chromatogram obtained with the test solution;

A_2 = area of the peak due to naringin in the chromatogram obtained with reference solution (c);

m_1 = mass of the herbal drug to be examined used to prepare the test solution, in grams;

m_2 = mass of *naringin CRS* used to prepare reference solution (a), in grams;

p = percentage content of naringin in *naringin CRS*.

01/2008:2377

DWARF PINE OIL

Pini pumilionis aetheroleum

DEFINITION

Essential oil obtained by steam distillation of the fresh leaves and twigs of *Pinus mugo* Turra. A suitable antioxidant may be added.

CHARACTERS

Appearance: clear, colourless or pale yellow liquid.

IDENTIFICATION

First identification: *B*.

Second identification: *A*.

A. Thin-layer chromatography (*2.2.27*).

Test solution. Dilute 1 mL of the substance to be examined to 10 mL with *toluene R*.

Reference solution. Dissolve 10 mg of *borneol R* and 10 µL of *bornyl acetate R* in *toluene R* and dilute to 10 mL with the same solvent.

Plate: *TLC silica gel plate R* (5-40 µm) [or *TLC silica gel plate R* (2-10 µm)].

Mobile phase: *ethyl acetate R*, *toluene R* (5:95 *V/V*).

Application: 10 µL [or 2 µL], as bands.

Development: over a path of 15 cm [or 6 cm].

Drying: in air.

Detection: spray with *anisaldehyde solution R* and heat at 100-105 °C for 5-10 min; examine in daylight.

Results: see below the sequence of zones present in the chromatograms obtained with the reference solution and the test solution. Furthermore, other zones may be present in the chromatogram obtained with the test solution.

Top of the plate	
	A pink zone
_____	_____
Bornyl acetate: a brown or greyish-brown zone	A brown or greyish-brown zone (bornyl acetate)
	A pink zone
_____	_____
Borneol: a brown or greyish-brown zone	A cluster of violet zones
Reference solution	**Test solution**

B. Examine the chromatograms obtained in the test for chromatographic profile.

Results: the characteristic peaks in the chromatogram obtained with the test solution are similar in retention time to those in the chromatogram obtained with reference solution (a).

Herbal drugs

TESTS

Relative density (*2.2.5*): 0.857 to 0.868.

Refractive index (*2.2.6*): 1.474 to 1.480.

Optical rotation (*2.2.7*): – 7° to – 15°.

Acid value (*2.5.1*): maximum 1.0.

Peroxide value (*2.5.5*): maximum 20.

Fatty oils and resinified oils (*2.8.7*). It complies with the test.

Chromatographic profile. Gas chromatography (*2.2.28*): use the normalisation procedure.

Test solution. Dilute 200 µL of the substance to be examined to 10.0 mL with *heptane R*.

Reference solution (a). Dilute 30 µL of *α-pinene R*, 5 mg of *camphene R*, 10 µL of *β-pinene R*, 20 µL of *car-3-ene R*, 5 µL of *β-myrcene R*, 10 µL of *limonene R*, 5 µL of *p-cymene R*, 10 µL of *terpinolene R*, 5 µL of *bornyl acetate R* and 5 µL of *β-caryophyllene R* in *heptane R* and dilute to 5 mL with the same solvent.

Reference solution (b). Dissolve 5 mg of *camphene R* in *heptane R* and dilute to 50.0 mL with the same solvent. Dilute 1.0 mL of this solution to 10.0 mL with *heptane R*.

Column:

- *material*: fused silica;
- *size*: *l* = 60 m, Ø = 0.25 mm;
- *stationary phase*: *macrogol 20 000 R* (film thickness 0.25 µm).

Carrier gas: *helium for chromatography R*.

Flow rate: 1.5 mL/min.

Split ratio: 1:50.

Temperature:

	Time (min)	Temperature (°C)
Column	0 - 10	65
	10 - 41	65 → 220
	41 - 50	220
Injection port		220
Detector		250

Detection: flame ionisation.

Injection: 1 µL.

Elution order: order indicated in the composition of reference solution (a); record the retention times of these substances.

System suitability: reference solution (a):

- *resolution*: minimum 1.5 between the peaks due to car-3-ene and β-myrcene.

Identification of components: using the retention times determined from the chromatogram obtained with reference solution (a), locate the components of reference solution (a) in the chromatogram obtained with the test solution; the peak due to β-phellandrene is eluted after the peak due to limonene with a relative retention of about 1.03 with reference to limonene.

Determine the percentage content of each of these components. The limits are within the following ranges:

- *α-pinene*: 10.0 per cent to 30.0 per cent;
- *camphene*: maximum 2.0 per cent;
- *β-pinene*: 3.0 per cent to 14.0 per cent;
- *car-3-ene*: 10.0 per cent to 20.0 per cent;
- *β-myrcene*: 3.0 per cent to 12.0 per cent;
- *limonene*: 8.0 per cent to 14.0 per cent;
- *β-phellandrene*: 10.0 per cent to 19.0 per cent;
- *p-cymene*: maximum 2.5 per cent;
- *terpinolene*: maximum 8.0 per cent;
- *bornyl acetate*: 0.5 per cent to 5.0 per cent;
- *β-caryophyllene*: 0.5 per cent to 5.0 per cent;
- *disregard limit*: the area of the principal peak in the chromatogram obtained with reference solution (b) (0.05 per cent).

STORAGE

In an inert container and at a temperature not exceeding 25 °C.

01/2014:2564

ECLIPTA HERB

Ecliptae herba

DEFINITION

Dried, whole or fragmented, flowering aerial parts of *Eclipta prostrata* L.

Content: minimum 0.04 per cent of wedelolactone ($C_{16}H_{10}O_7$; M_r 314.3) (dried drug).

IDENTIFICATION

A. The cylindrical stems are striated longitudinally and are 2-5 mm in diameter. The external surface is brownish-green or dark green and bears covering trichomes, flattened against the stem and all pointing upwards. The hairy, dark green leaves are opposite, always sessile, elongate, lanceolate, with entire or slightly dentate margins. The capitula are 2-6 mm in diameter, with whitish flowers that do not extend beyond the bracts of the involucre. The fruits are elliptical, flattened achenes, brown or pale brown, 2-3 mm long.

B. Microscopic examination (*2.8.23*). The powder is greenish-brown. Examine under a microscope using *chloral hydrate solution R*. The powder shows the following diagnostic characters: numerous free, whole or broken covering trichomes, usually tricellular, up to 700 µm long, with a broad basal cell, a relatively long median cell with thick and warty walls, and a very short, pointed, sub-triangular distal cell; fragments of lamina, some of which have trichomes, with sinuous epidermis cells and anomocytic stomata (*2.8.3*) with 3-4 subsidiary cells, often accompanied by palisade parenchyma; covering trichomes similar to those previously described; fragments of stems with different types of vascular bundles, sometimes accompanied by secretory canals; bundles of fibres with thickened walls; pollen grains about 20 µm in diameter, with 3 pores and a spiny exine.

C. Thin-layer chromatography (*2.2.27*).

Test solution. To 0.5 g of the powdered herbal drug (355) (*2.9.12*) add 5 mL of *methanol R* and sonicate at 60 °C for 10 min. Allow to cool, centrifuge and use the supernatant.

Reference solution. Dissolve 1 mg of *wedelolactone R* and 1 mg of *rosmarinic acid R* in 1 mL of *methanol R*.

Plate: *TLC silica gel F_{254} plate R* (2-10 µm).

Mobile phase: *anhydrous formic acid R*, *acetone R*, *toluene R* (1:6:11 *V/V/V*).

Application: 10 µL as bands of 8 mm.

Development: over a path of 6 cm.

Drying: in air.

Detection: heat at 100 °C for 5 min, treat the plate whilst still hot with a 0.5 per cent *V/V* solution of *diphenylboric acid aminoethyl ester R* in *ethyl acetate R*. Examine in ultraviolet light at 365 nm.

Results: see below the sequence of zones present in the chromatograms obtained with the reference solution and the test solution. Furthermore, other faint fluorescent zones may be present in the chromatogram obtained with the test solution.

Herbal drugs

Top of the plate	
	A red fluorescent zone
	A diffuse pale blue fluorescent zone
	A greenish-white fluorescent zone
———	———
	A pale blue fluorescent zone
Wedelolactone: a bluish-white fluorescent zone	A bluish-white fluorescent zone (wedelolactone)
	A bluish-white fluorescent zone
———	———
Rosmarinic acid: a bluish-white fluorescent zone	
	A bluish-white fluorescent zone
Reference solution	**Test solution**

TESTS

Loss on drying (*2.2.32*): maximum 11.0 per cent, determined on 1.000 g of the powdered herbal drug (355) (*2.9.12*) by drying in an oven at 105 °C for 2 h.

Total ash (*2.4.16*): maximum 13.0 per cent.

Ash insoluble in hydrochloric acid (*2.8.1*): maximum 2.0 per cent.

ASSAY

Liquid chromatography (*2.2.29*).

Test solution. Disperse 0.300 g of the powdered herbal drug (355) (*2.9.12*) in 10 mL of *ethanol (70 per cent V/V) R* in a conical flask and weigh. Heat under a reflux condenser for 1 h, cool and weigh again. Compensate the loss of solvent with *ethanol (70 per cent V/V) R*, mix well and allow to stand. Filter through a membrane filter (nominal pore size 0.22 µm).

Reference solution (a). Dissolve 4.0 mg of *wedelolactone CRS* in *methanol R* and dilute to 100.0 mL with the same solvent.

Reference solution (b). Dissolve 2 mg of *ethyl parahydroxybenzoate R* in reference solution (a) and dilute to 50 mL with reference solution (a).

Column:

- *size*: *l* = 0.15 m, Ø = 4.6 mm;
- *stationary phase*: *end-capped octadecylsilyl silica gel for chromatography R* (5 µm).

Mobile phase: *acetonitrile R*, 0.2 per cent *V/V* solution of *phosphoric acid R* (24:76 *V/V*).

Flow rate: 1.0 mL/min.

Detection: spectrophotometer at 249 nm.

Injection: 20 µL.

Run time: 1.5 times the retention time of wedelolactone.

Relative retention with reference to wedelolactone (retention time = about 17 min): ethyl parahydroxybenzoate = about 1.1.

System suitability: reference solution (b):

- *resolution*: minimum 2.0 between the peaks due to wedelolactone and ethyl parahydroxybenzoate.

Calculate the percentage content of wedelolactone using the following expression:

$$\frac{A_1 \times m_2 \times p}{A_2 \times m_1 \times 10}$$

A_1 = area of the peak due to wedelolactone in the chromatogram obtained with the test solution;

A_2 = area of the peak due to wedelolactone in the chromatogram obtained with reference solution (a);

m_1 = mass of the herbal drug to be examined used to prepare the test solution, in grams;

m_2 = mass of *wedelolactone CRS* used to prepare reference solution (a), in grams;

p = percentage content of wedelolactone in *wedelolactone CRS*.

01/2013:1217

ELDER FLOWER

Sambuci flos

DEFINITION

Dried flowers of *Sambucus nigra* L.

Content: minimum 0.80 per cent of flavonoids, expressed as isoquercitroside ($C_{21}H_{20}O_{12}$; M_r 464.4) (dried drug).

IDENTIFICATION

A. The flower, about 5 mm in diameter, has 3 small bracts, visible under a lens, and may have a peduncle. The 5-toothed calyx is small; the corolla is light yellow, with 5 broadly oval petals fused at their bases into a tube. The filaments of the 5 yellow stamens alternate with the petals. The corolla is often isolated or attached to the stamens, to which it is fused at the base. The ovary is inferior and it bears a short style with 3 obtuse stigmata.

B. Microscopic examination (*2.8.23*). The powder is greenish-yellow. Examine under a microscope using *chloral hydrate solution R*. The powder shows the following diagnostic characters (Figure 1217.-1): numerous spherical, sometimes ellipsoidal, pollen grains about 30 µm in diameter, with 3 germinal pores and very finely pitted exine [G]; cells of the lower epidermis of the sepals often containing oil globules and covered by a striated cuticle in surface view [A]; rare fragments of the rim of the sepals showing unicellular marginal teeth, in transverse section [E]; petal fragments with numerous small globules of essential oil [H]; fragments of upper epidermis of the sepals [B] or petals [F], in surface view, with slightly and irregularly thickened walls [Ba, Fa], anomocytic stomata (*2.8.3*) [Bb, Fb] and a striated cuticle; mesophyll cells of petals and sepals with idioblasts containing numerous microsphenoid crystals of calcium oxalate [Bc]; fragments of anthers in transverse section [C] and in surface view [D], showing the outer layer [Ca] and the cells of the fibrous layer [Cb, Cc, D].

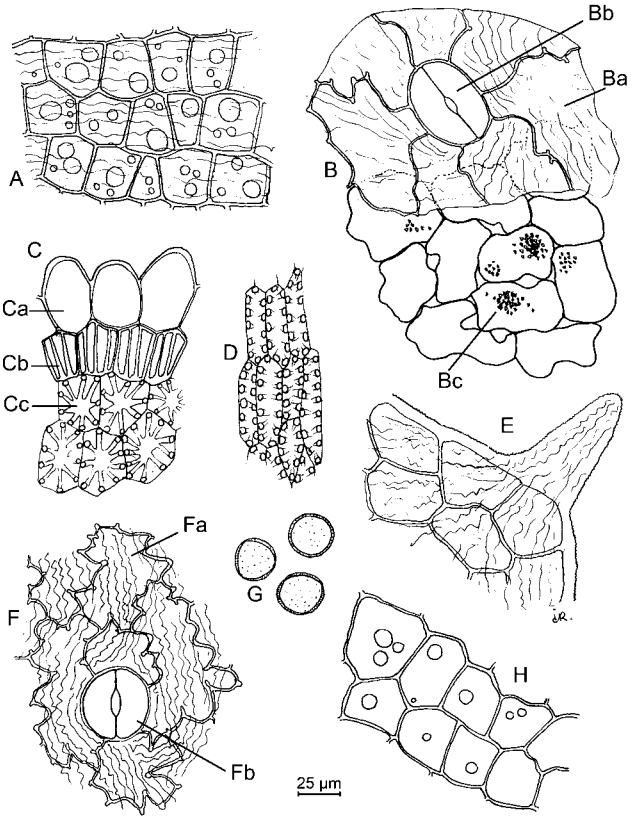

Figure 1217.-1. – *Illustration for identification B of powdered herbal drug of elder flower*

C. Thin-layer chromatography (*2.2.27*).

Test solution. To 0.5 g of the powdered herbal drug (355) (*2.9.12*) add 5 mL of *methanol R* and sonicate for 10 min. Centrifuge for 5 min.

Reference solution. Dissolve 1 mg of *caffeic acid R*, 1 mg of *chlorogenic acid R*, 2.5 mg of *hyperoside R* and 2.5 mg of *rutin R* in 10 mL of *methanol R*.

Plate: *TLC silica gel plate R* (2-10 µm).

Mobile phase: *anhydrous formic acid R*, *water R*, *methyl ethyl ketone R*, *ethyl acetate R* (10:10:30:50 *V/V/V/V*).

Application: 4 µL as bands of 8 mm.

Development: over a path of 6 cm.

Drying: in air.

Detection: heat the plate for 5 min at 100 °C and treat with a 1 g/L solution of *diphenylboric acid aminoethyl ester R* in *ethyl acetate R*, then treat with a 5 g/L solution of *macrogol 400 R* in *methylene chloride R*; allow to dry in air for 30 min. Examine in daylight (results A) and in ultraviolet light at 365 nm (results B).

Results A: see below the sequence of zones present in the chromatograms obtained with the reference solution and the test solution. Furthermore, other faint zones may be present in the chromatogram obtained with the test solution.

Top of the plate	
———	———
	An orange zone
Hyperoside: a dark yellow zone	
———	———
Rutin: a dark yellow zone	A dark yellow zone
Reference solution	**Test solution**

Results B: see below the sequence of zones present in the chromatograms obtained with the reference solution and the test solution. Furthermore, other faint zones may be present in the chromatogram obtained with the test solution.

Top of the plate	
Caffeic acid: a blue fluorescent zone	
	An intense, light blue fluorescent zone
	2 light blue fluorescent zones
———	———
	An orange fluorescent zone
Hyperoside: an orange fluorescent zone	
Chlorogenic acid: a light blue fluorescent zone	An intense, light blue fluorescent zone
———	———
Rutin: an orange fluorescent zone	An orange fluorescent zone
Reference solution	**Test solution**

TESTS

Foreign matter (*2.8.2*): maximum 8 per cent of fragments of coarse pedicels and other foreign matter and maximum 15 per cent of discoloured, brown flowers. Carry out the determination on 10 g.

***Sambucus ebulus* L.** Examine the chromatograms obtained in identification C.

Results B: the chromatogram obtained with the test solution does not show a greenish-white zone above the zone due to caffeic acid in the chromatogram obtained with the reference solution; in the chromatogram obtained with the test solution, no green fluorescent zone is seen just below the orange fluorescent zone due to rutin in the chromatogram obtained with the reference solution.

Loss on drying (*2.2.32*): maximum 10.0 per cent, determined on 1.000 g of the powdered herbal drug (355) (*2.9.12*) by drying in an oven at 105 °C for 2 h.

Total ash (*2.4.16*): maximum 10.0 per cent.

ASSAY

Stock solution. In a 100 mL round-bottomed flask, introduce 0.600 g of the powdered herbal drug (355) (*2.9.12*), add 1 mL of a 5 g/L solution of *hexamethylenetetramine R*, 20 mL of *acetone R* and 2 mL of *hydrochloric acid R1*. Boil the mixture under a reflux condenser for 30 min. Filter the mixture through a plug of absorbent cotton into a flask. Add the

absorbent cotton to the residue in the round-bottomed flask and extract with 2 quantities, each of 20 mL, of *acetone R*, each time boiling under a reflux condenser for 10 min. Allow to cool, filter each extract through the plug of absorbent cotton into the flask. After cooling, filter the combined acetone extracts through a filter paper into a volumetric flask and dilute to 100.0 mL with *acetone R* by rinsing the flask and the filter paper. Introduce 20.0 mL of this solution into a separating funnel, add 20 mL of *water R* and shake the mixture with 1 quantity of 15 mL and then 3 quantities, each of 10 mL, of *ethyl acetate R*. Combine the ethyl acetate extracts in a separating funnel, wash with 2 quantities, each of 50 mL, of *water R*, and filter the extracts over 10 g of *anhydrous sodium sulfate R* into a volumetric flask and dilute to 50.0 mL with *ethyl acetate R*.

Test solution. To 10.0 mL of the stock solution add 1 mL of *aluminium chloride reagent R* and dilute to 25.0 mL with a 5 per cent *V/V* solution of *glacial acetic acid R* in *methanol R*.

Compensation liquid. Dilute 10.0 mL of the stock solution to 25.0 mL with a 5 per cent *V/V* solution of *glacial acetic acid R* in *methanol R*.

After 30 min, measure the absorbance (*2.2.25*) of the test solution at 425 nm, by comparison with the compensation liquid.

Calculate the percentage content of flavonoids, expressed as isoquercitroside, using the following expression:

$$\frac{A \times 1.25}{m}$$

i.e. taking the specific absorbance of isoquercitroside to be 500.

A = absorbance at 425 nm;

m = mass of the herbal drug to be examined, in grams.

01/2008:1419
corrected 7.0

ELEUTHEROCOCCUS

Eleutherococci radix

DEFINITION

Dried, whole or cut underground organs of *Eleutherococcus senticosus* (Rupr. et Maxim.) Maxim.

Content: minimum 0.08 per cent for the sum of eleutheroside B (M_r 372.4) and eleutheroside E (M_r 742.7).

IDENTIFICATION

A. The rhizome is knotty, of irregular cylindrical shape, 1.5 cm to 4.0 cm in diameter; the surface is rugged, longitudinally wrinkled and greyish-brown to blackish-brown; the bark, about 2 mm thick, closely adheres to the xylem; the heartwood is light brown and the sapwood is pale yellow; the fracture shows short thin fibres in the bark and is coarsely fibrous, especially in the internal part of the xylem. The lower surface bears numerous cylindrical and knotty roots, 3.5 cm to 15 cm long and 0.3 cm to 1.5 cm in diameter; with a smooth, greyish-brown to blackish-brown surface; the bark is about 0.5 mm thick, closely adhering to the pale yellow xylem; the fracture is slightly fibrous; in places where the outer layer has been removed, the outer surface is yellowish-brown.

B. Reduce to a powder (355) (*2.9.12*). The powder is yellowish-brown. Examine under a microscope, using *chloral hydrate solution R*. The powder shows numerous groups of thick-walled, lignified fibres; fragments of reticulate and bordered pitted vessels with a wide lumen; groups of secretory canals, up to 20 µm in diameter with brown contents; parenchymatous cells containing cluster crystals of calcium oxalate 10 µm to 50 µm in diameter. Examine under a microscope, using a 50 per cent *V/V* solution of *glycerol R*. The powder shows small starch granules, rounded to slightly angular in outline, single compounds or with 2 or 3 components.

C. Thin-layer chromatography (*2.2.27*).

Test solution. To 1.0 g of the powdered herbal drug (355) (*2.9.12*) add 10 mL of *alcohol (50 per cent V/V) R* and boil under reflux for 1 h. Cool and filter. Evaporate the filtrate to dryness on a water-bath. Dissolve the residue in 2.5 mL of a mixture of 5 volumes of *water R* and 20 volumes of *alcohol (50 per cent V/V) R* and filter.

Reference solution. Dissolve 2.0 mg of *esculin R* and 2.0 mg of *catalpol R* in 20 mL of a mixture of 2 volumes of *water R* and 8 volumes of *alcohol (50 per cent V/V) R*.

Plate: *TLC silica gel plate R*.

Mobile phase: *water R*, *methanol R*, *methylene chloride R* (4:30:70 *V/V/V*).

Application: 20 µL, as bands.

Development: over a path of 10 cm.

Drying: in air.

Detection A: examine in ultraviolet light at 365 nm.

Results A: the chromatogram obtained with the reference solution shows in the upper half a blue fluorescent zone (esculin).

Detection B: spray with *anisaldehyde solution R* and examine in daylight while heating at 100-105 °C for 5-10 min.

Results B: see below the sequence of the zones present in the chromatograms obtained with the reference solution and the test solution. Furthermore, other faint zones are present in the chromatogram obtained with the test solution.

Top of the plate	
Esculin: a blue fluorescent zone (marked at 365 nm)	A brown zone (eleutheroside B)
	A reddish-brown zone (eleutheroside E)
Catalpol: a violet-brown zone	
	2 brown zones
Reference solution	**Test solution**

TESTS

Foreign matter (*2.8.2*): maximum 3 per cent.

Loss on drying (*2.2.32*): maximum 10.0 per cent, determined on 1.000 g of the powdered herbal drug (355) (*2.9.12*) by drying in an oven at 105 °C for 2 h.

Total ash (*2.4.16*): maximum 8.0 per cent.

ASSAY

Liquid chromatography (*2.2.29*).

Test solution. To 0.500 g of the powdered herbal drug (355) (*2.9.12*) in a 100 mL round-bottomed flask, add 30 mL of a mixture of equal volumes of *alcohol R* and *water R*. Heat in a water-bath at 60 °C for 30 min. Allow to cool and filter through a sintered-glass filter (*2.1.2*). Collect the liquid in a 250 mL round-bottomed flask. Repeat this operation twice, using the residue obtained in the filtration step instead of the powdered herbal drug. Add both fractions of supernatant to the 250 mL round-bottomed flask. Evaporate under reduced pressure until about 10 mL of supernatant is left in the flask. Transfer the supernatant quantitatively to a

20.0 mL volumetric flask and dilute to 20.0 mL with a mixture of equal volumes of *alcohol R* and *water R*. Filter through a nylon filter (pore size 0.45 µm).

Reference solution (a). Dissolve 10 mg of *ferulic acid R* in a mixture of equal volumes of *methanol R* and *water R* and dilute to 20.0 mL with the same mixture of solvents.

Reference solution (b). Dissolve 10 mg of *caffeic acid R* in a mixture of equal volumes of *methanol R* and *water R* and dilute to 20.0 mL with the same mixture of solvents.

Reference solution (c). Transfer 1 mL of reference solution (a) to a 25 mL volumetric flask and dilute to 25.0 mL with a mixture of equal volumes of *methanol R* and *water R*. Filter through a nylon filter (pore size 0.45 µm).

Reference solution (d). Transfer 1 mL of reference solution (a) and 1 mL of reference solution (b) in a mixture of equal volumes of *methanol R* and *water R* and dilute to 25.0 mL with the same mixture of solvents. Filter through a nylon filter (pore size 0.45 µm).

Precolumn:

- *size*: *l* = 4 mm, Ø = 4.6 mm,
- *stationary phase*: *octadecylsilyl silica gel for chromatography R* (5 µm).

Column:

- *size*: *l* = 0.25 m, Ø = 4.6 mm,
- *stationary phase*: *octadecylsilyl silica gel for chromatography R* (5 µm).

Mobile phase:

- *mobile phase A*: *phosphoric acid R*, *water R* (0.5:99.5 *V/V*),
- *mobile phase B*: *acetonitrile for chromatography R*,

Time (min)	Mobile phase A (per cent *V/V*)	Mobile phase B (per cent *V/V*)
0 - 5	90	10
5 - 27	90 → 80	10 → 20
27 - 30	80 → 50	20 → 50
30 - 35	50	50

Flow rate: 1.0 mL/min.

Detection: spectrophotometer at 220 nm.

Injection: 20 µL of the test solution and reference solutions (c) and (d).

Retention time: eleutheroside B = about 10 min; eleutheroside E = about 22 min.

Locate the peaks due to eleutheroside B and eleutheroside E using the UV spectra shown in Figures 1419.-1 and 1419.-2.

System suitability: reference solution (d):

- *resolution*: minimum 15 between the peaks due to caffeic acid and ferulic acid.

Calculate the total percentage content of eleutheroside B and eleutheroside E from the expression:

$$\frac{(A_B \times C \times 0.73 \times 2)}{(A_R \times m)} + \frac{(A_E \times C \times 1.90 \times 2)}{(A_R \times m)}$$

A_B = area of the peak due to eleutheroside B in the chromatogram obtained with the test solution,

A_E = area of the peak due to eleutheroside E in the chromatogram obtained with the test solution,

A_R = area of the peak due to ferulic acid in the chromatogram obtained with reference solution (c),

C = concentration of ferulic acid in reference solution (c), in micrograms per millilitre,

m = mass of the herbal drug to be examined, in milligrams.

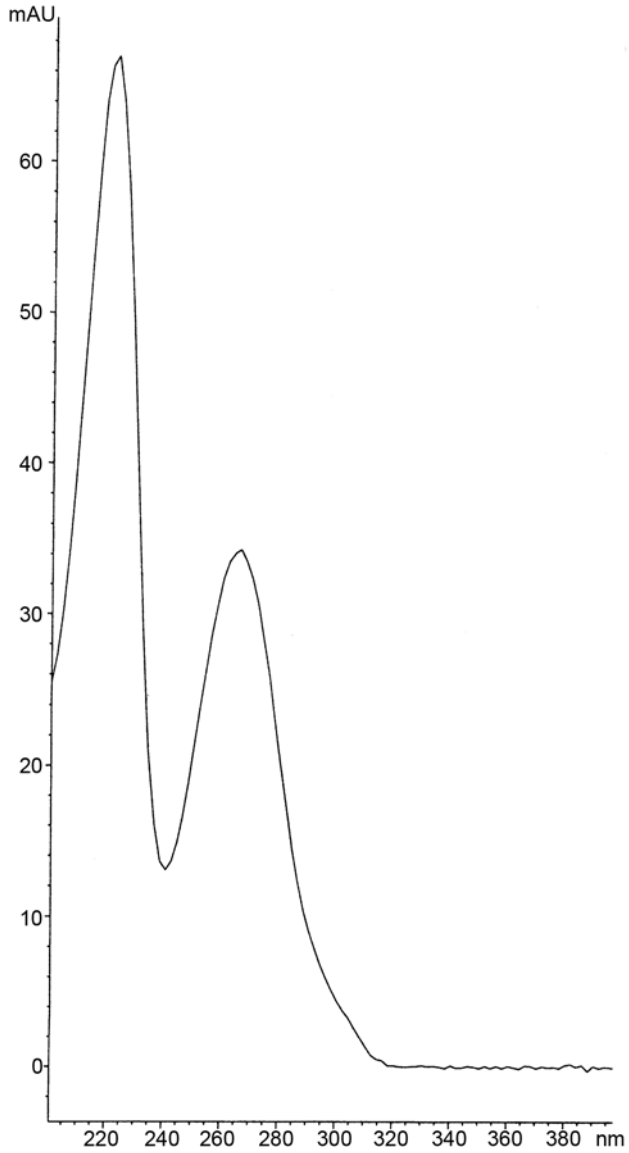

Figure 1419.-1. – *UV spectrum of eleutheroside B for the assay of eleutherococcus*

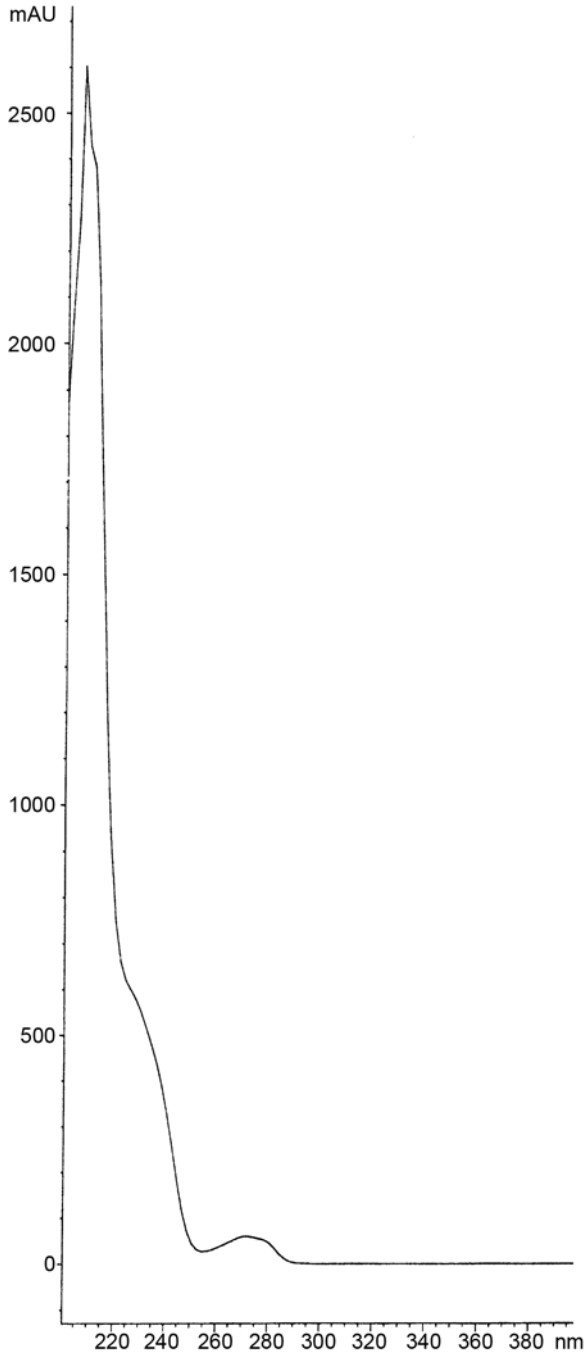

Figure 1419.-2. – *UV spectrum of eleutheroside E for the assay of eleutherococcus*

04/2010:2451

EPHEDRA HERB

Ephedrae herba

DEFINITION

Dried herbaceous stem of *Ephedra sinica* Stapf, *Ephedra intermedia* Schrenk et C.A.Mey. or *Ephedra equisetina* Bunge.

Content: minimum 1.0 per cent of ephedrine ($C_{10}H_{15}NO$; M_r 165.2) (dried drug).

IDENTIFICATION

A. Thin cylindrical pale green or yellowish-green stems up to 30 cm long and 1-3 mm in diameter; longitudinally striated and slightly rough; internodes varying in length between 1 cm and 6 cm; opposite and decussate leaves reduced to sheaths surrounding the stem, carrying diminutive laminae 1.5-4 mm long with 2 lobes (rarely 3), acutely triangular, apex greyish-white, base tubular and reddish-brown or blackish-brown. Fracture slightly fibrous.

B. Reduce to a powder (355) (*2.9.12*). The powder is greenish-yellow. Examine under a microscope using *chloral hydrate solution R*. The powder shows the following diagnostic characters: fragments of the epidermis, in surface view, composed of rectangular cells and numerous stomata with a small depression at each end, the guard cells large and broadly elliptical; epidermal fragments, in transverse section, showing a thick cuticle and some of the cells extended to form projections; fibres in groups or single, with thick, usually lignified walls; fragments of lignified tissue composed of small, bordered-pitted tracheids, vessels with spiral thickening and groups of sclereids; groups of parenchyma, some with thickened and pitted walls; scattered prism crystals of calcium oxalate.

C. Thin-layer chromatography (*2.2.27*).

Test solution. To 0.2 g of the powdered herbal drug (355) (*2.9.12*) add 0.5 mL of *concentrated ammonia R* and 10 mL of *methylene chloride R*. Boil in a water-bath under a reflux condenser for 1 h. Allow to cool, filter and evaporate the filtrate to dryness; dissolve the residue in 2 mL of *methanol R*.

Reference solution. Dissolve 1 mg of *ephedrine hydrochloride CRS* and 1 mg of *2-indanamine hydrochloride R* in 2 mL of *methanol R*.

Plate: *TLC silica gel plate R* (5-40 µm) [or *TLC silica gel plate R* (2-10 µm)].

Mobile phase: *concentrated ammonia R*, *methanol R*, *methylene chloride R* (0.5:5:20 *V/V/V*).

Application: 10 µL [or 1 µL] as spots with a diameter of 5 mm [or 2 mm].

Development: over a path of 10 cm [or 6 cm].

Drying: in air.

Detection: spray with a 2 g/L solution of *ninhydrin R* in *ethanol (96 per cent) R*; heat at 110 °C for 10 min and examine immediately in daylight.

Results: see below the sequence of spots present in the chromatograms obtained with the reference solution and the test solution. Furthermore, other faint spots may be present in the chromatogram obtained with the test solution.

Top of the plate	
2-Indanamine: a purple spot	A purple spot may be present
Ephedrine: a purple spot at the border between the middle and lower thirds	A purple spot (ephedrine) at the border between the middle and lower thirds
Reference solution	**Test solution**

TESTS

Loss on drying (*2.2.32*): maximum 10.0 per cent, determined on 1.000 g of the powdered herbal drug (355) (*2.9.12*) by drying in an oven at 105 °C for 2 h.

Total ash (*2.4.16*): maximum 9.0 per cent.

ASSAY

Liquid chromatography (*2.2.29*).

Test solution. To 0.200 g of the powdered herbal drug (355) (*2.9.12*) add 25.0 mL of *methanol R*, weigh and sonicate for 45 min. Allow to cool, weigh and adjust to the original mass with *methanol R*, shake well and filter. Transfer 1.0 mL of the filtrate to a small column (1 cm in diameter) packed with

1.50 g of *neutral aluminium oxide R* (60-210 µm). Elute with a mixture of equal volumes of *methanol R* and *water R*. Collect about 9 mL of the eluate, add 0.5 mL of *phosphoric acid R* and dilute to 10.0 mL with a mixture of equal volumes of *methanol R* and *water R*.

Reference solution (a). Dissolve 10.0 mg of *ephedrine hydrochloride CRS* in *methanol R* and dilute to 100.0 mL with the same solvent. Dilute 2.0 mL of the solution to 25.0 mL with the mobile phase.

Reference solution (b). Dissolve 1 mg of *ephedrine hydrochloride CRS* and 1 mg of *terbutaline sulfate CRS* in *methanol R* and dilute to 10 mL with the same solvent. Dilute 2 mL of the solution to 25 mL with the mobile phase.

Column:

- *size*: *l* = 0.25 m, Ø = 4.6 mm;
- *stationary phase*: *octadecylsilyl silica gel for chromatography R* (5 µm).

Mobile phase: *acetonitrile R1*, 0.1 per cent *V/V* solution of *phosphoric acid R* (15:85 *V/V*).

Flow rate: 2.0 mL/min.

Detection: spectrophotometer at 207 nm.

Injection: 10 µL.

Run time: 3 times the retention time of ephedrine.

System suitability: reference solution (b):

- *resolution*: minimum 3.5 between the peaks due to terbutaline and ephedrine.

Calculate the percentage content of ephedrine using the following expression:

$$\frac{A_1 \times m_2 \times p \times 165.2}{A_2 \times m_1 \times 5 \times 201.7}$$

A_1 = area of the peak due to ephedrine in the chromatogram obtained with the test solution;

A_2 = area of the peak due to ephedrine in the chromatogram obtained with reference solution (a);

m_1 = mass of the herbal drug to be examined used to prepare the test solution, in grams;

m_2 = mass of *ephedrine hydrochloride CRS* used to prepare reference solution (a), in grams;

p = percentage content of ephedrine hydrochloride in *ephedrine hydrochloride CRS*.

04/2012:1825

EQUISETUM STEM

Equiseti herba

DEFINITION

Whole or cut, dried sterile aerial parts of *Equisetum arvense* L.

Content: minimum 0.3 per cent of total flavonoids, expressed as isoquercitroside ($C_{21}H_{20}O_{12}$; M_r 464.4) (dried drug).

IDENTIFICATION

A. It consists of fragments of grooved main stems, branches with longitudinal sharp ridges and leaves in whorls, united at the base into a sheath, light green or greenish-grey. The fragments are rough to the touch, brittle and crunchy when crushed. The main stems are about 1-4.5 mm in diameter, hollow, jointed at the nodes, which occur at intervals of about 1.5-4.5 cm; distinct vertical grooves are present on the internodes, ranging in number from 4 to 14 or more. The central hollow is less than 50 per cent but more than 25 per cent of the diameter of the main stem. Verticils of widely spaced and erect branches, usually simple, each about 1 mm thick with 3-5 longitudinal, sharp ridges, occur at the nodes; at the end of each ridge is a protruding, distinct collenchymatic bundle under the epidermis. The branches are not hollow. The leaves are small, linear, verticillate at each node, concrescent at the base; they form a toothed sheath around the stem with the number of teeth corresponding to the number of grooves on the stem. Each tooth, often brown, is lanceolate-triangular. The lowest internode of each branch is longer than the sheath of the stem to which it belongs.

B. Microscopic examination (*2.8.23*). The powder is greenish-grey. Examine under a microscope using *chloral hydrate solution R*. The powder shows the following diagnostic characters (Figure 1825.-1): fragments of the epidermis in surface view [B, C] composed of rectangular cells with wavy walls and paracytic stomata (*2.8.3*) in 2-4 rows, the 2 subsidiary cells are in the same plane as the epidermis, cover the guard cells and show radial ridges; small silica pilulae are scattered on the surface of the subsidiary cells and appear more frequent at the margin forming a distinct ring surrounding the subsidiary cells (C); 2-celled papillae on the ridges, less distinct on the main stem [A] but large and rectangular on the branches, oriented longitudinally [F]; in surface view, the epidermis of the main stems consists of elongated cells [G], the epidermis of the secondary branches shows the 2-celled papillae which resemble pairs of small cells separated by a larger cell [D]; fragments of large-celled parenchyma [H] and groups of long unlignified fibres with narrow lumens; small vessels with spiral or annular thickening [E].

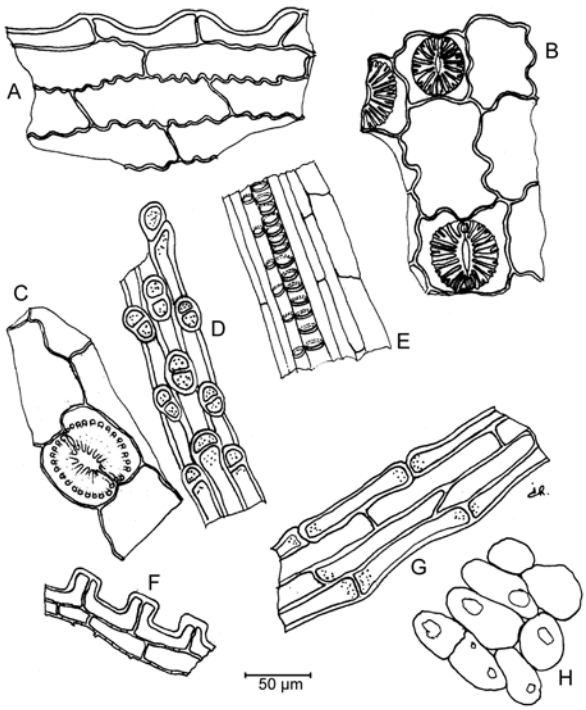

Figure 1825.-1. – *Illustration for identification test B of powdered herbal drug of equisetum stem*

C. Examine the chromatograms obtained in the test for *Equisetum palustre*.

Results: see below the sequence of zones present in the chromatograms obtained with reference solution (b) and the test solution. Furthermore, other weak fluorescent zones may be present in the chromatogram obtained with the test solution.

Herbal drugs

Top of the plate	
Caffeic acid: a greenish-blue fluorescent zone	2 red fluorescent zones
———	2 greenish-blue fluorescent zones
Hyperoside: an orange fluorescent zone	———
———	An orange fluorescent zone
Rutin: an orange fluorescent zone	2 greenish-blue fluorescent zones
	———
Reference solution (b)	**Test solution**

TESTS

Foreign matter (*2.8.2*): maximum 5 per cent.

Equisetum palustre. Thin-layer chromatography (*2.2.27*).

Test solution. To 1.0 g of the powdered herbal drug (355) (*2.9.12*) add 10 mL of *methanol R*. Heat in a water-bath at 60 °C for 10 min with occasional shaking. Allow to cool. Filter.

Reference solution (a). To 100.0 mg of *Equisetum palustre HRS* add 10 mL of *methanol R*. Heat in a water-bath at 60 °C for 10 min with occasional shaking. Allow to cool. Filter.

Reference solution (b). Dissolve 1.0 mg of *caffeic acid R*, 2.5 mg of *hyperoside R* and 2.5 mg of *rutin R* in 20 mL of *methanol R*.

Plate: *TLC silica gel plate R* (2-10 µm).

Mobile phase: *anhydrous formic acid R*, *glacial acetic acid R*, *water R*, *ethyl acetate R* (7.5:7.5:18:67 *V/V/V/V*).

Application: 5 µL as bands of 8 mm.

Development: over a path of 6 cm.

Drying: in a current of cold air for 5 min.

Detection: heat at 100 °C for 3 min and treat the still-warm plate with a 10 g/L solution of *diphenylboric acid aminoethyl ester R* in *methanol R*, then treat with a 50 g/L solution of *macrogol 400 R* in *methanol R*; allow to dry in a current of cold air and examine after 10 min in ultraviolet light at 365 nm.

System suitability: the chromatogram obtained with reference solution (a) shows 2 greenish fluorescent zones just above the line of application.

Results: in the chromatogram obtained with the test solution, any greenish fluorescent zones just above the line of application are not more intense than the corresponding zones (characteristic of *E. palustre* L.) in the chromatogram obtained with reference solution (a).

Loss on drying (*2.2.32*): maximum 10.0 per cent, determined on 1.000 g of the powdered herbal drug (355) (*2.9.12*) by drying in an oven at 105 °C for 2 h.

Ash insoluble in hydrochloric acid (*2.8.1*): minimum 3.0 per cent and maximum 15.0 per cent.

Total ash (*2.4.16*): minimum 12.0 per cent and maximum 27.0 per cent.

ASSAY

Stock solution. In a 100 mL round-bottomed flask, introduce 0.800 g of the powdered herbal drug (355) (*2.9.12*) and add 1 mL of a 5 g/L solution of *hexamethylenetetramine R*, 20 mL of *acetone R* and 2 mL of *hydrochloric acid R1*. Boil the mixture under a reflux condenser for 30 min. Filter the liquid through a plug of absorbent cotton into a flask. Add the absorbent cotton to the residue in the round-bottomed flask and extract with 2 quantities, each of 20 mL, of *acetone R*, each time boiling under a reflux condenser for 10 min. Allow to cool and filter each extract through a plug of absorbent cotton into the flask. After cooling, filter the combined acetone extracts through a filter paper into a volumetric flask and dilute to 100.0 mL with *acetone R* by rinsing the flask and the filter paper. Introduce 20.0 mL of the solution into a separating funnel, add 20 mL of *water R* and shake the mixture with 1 quantity of 15 mL and then 3 quantities, each of 10 mL, of *ethyl acetate R*. Combine the ethyl acetate extracts in a separating funnel, wash with 2 quantities, each of 50 mL, of *water R*, and filter the extracts over 10 g of *anhydrous sodium sulfate R* into a volumetric flask. Dilute to 50.0 mL with *ethyl acetate R*.

Test solution. To 10.0 mL of the stock solution add 1 mL of *aluminium chloride reagent R* and dilute to 25.0 mL with a 5 per cent *V/V* solution of *glacial acetic acid R* in *methanol R*.

Compensation solution. Dilute 10.0 mL of the stock solution to 25.0 mL with a 5 per cent *V/V* solution of *glacial acetic acid R* in *methanol R*.

Measure the absorbance (*2.2.25*) of the test solution after 30 min, by comparison with the compensation solution at 425 nm. Calculate the percentage content of flavonoids, expressed as isoquercitroside, using the following expression:

$$\frac{A \times 1.25}{m}$$

i.e. taking the specific absorbance of isoquercitroside to be 500.

A = absorbance at 425 nm;

m = mass of the substance to be examined, in grams.

01/2008:1320

EUCALYPTUS LEAF

Eucalypti folium

DEFINITION

Whole or cut dried leaves of older branches of *Eucalyptus globulus* Labill.

Content: minimum 20 mL/kg of essential oil for the whole drug (anhydrous drug) and minimum 15 mL/kg of essential oil for the cut drug (anhydrous drug).

CHARACTERS

Aromatic odour of cineole.

IDENTIFICATION

A. The leaves which are mainly greyish-green and relatively thick are elongated, elliptical and slightly sickle-shaped and usually up to 25 cm in length, and up to 5 cm in width. The petiole is twisted, strongly wrinkled and is 2-3 cm, rarely 5 cm, in length. The coriaceous, stiff leaves are entire and glabrous and have a yellowish-green mid rib. Lateral veins anastomose near the margin to a continuous line. The margin is even and somewhat thickened. On both surfaces are minute, irregularly distributed, warty dark brown spots. Small oil glands may be seen in transmitted light.

B. Reduce to a powder (355) (*2.9.12*). The powder is greyish-green. Examine under a microscope, using *chloral hydrate solution R*. The powder shows the following diagnostic characters: fragments of glabrous lamina with small thick-walled epidermal cells bearing a thick cuticle, numerous anomocytic stomata (*2.8.3*) of more than 80 µm in diameter and occasionally groups of brown cork cells, 300 µm in diameter and brownish-black in their centre; fragments of isobilateral mesophyll with 2-3 layers of palisade parenchyma on each side and in the centre several layers of spongy mesophyll with elongated cells with the same orientation as the palisade cells and containing prisms and cluster crystals of calcium oxalate; fragments of mesophyll containing large schizogenous oil glands.

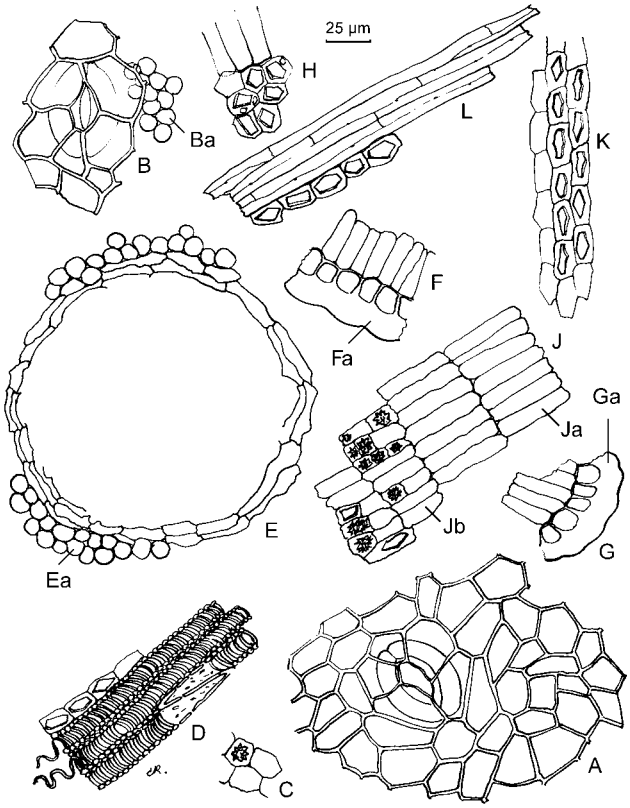

A. Thick-walled epidermal cells and anomocytic stomata, in surface view

B. Thick-walled epidermal cells and anomocytic stomata, with attached palisade parenchyma (Ba), in surface view

C. Parenchyma cells with cluster crystal of calcium oxalate

D. Vascular tissue

E. Schizogenous oil gland with attached palisade parenchyma (Ea)

F and G. Epidermis covered by a thick cuticle (Fa and Ga), in transverse section

H and J. Palisade parenchyma (Ja) with attached spongy mesophyll (Jb) containing prisms and cluster crystals of calcium oxalate

K. Cells containing prisms of calcium oxalate

L. Fibres

Figure 1320.-1. – *Illustration of powdered herbal drug of eucalyptus leaf (see Identification B)*

C. Thin-layer chromatography (*2.2.27*).

Test solution. Shake 0.5 g of the freshly powdered herbal drug (355) (*2.9.12*) with 5 mL of *toluene R* for 2-3 min and filter over about 2 g of *anhydrous sodium sulfate R*.

Reference solution. Dissolve 50 µL of *cineole R* in *toluene R* and dilute to 5 mL with the same solvent.

Plate: *TLC silica gel plate R*.

Mobile phase: *ethyl acetate R*, *toluene R* (10:90 *V/V*).

Application: 10 µL, as bands.

Development: over a path of 15 cm.

Drying: in air.

Detection: spray with *anisaldehyde solution R*. Examine in daylight while heating at 100-105 °C for 5-10 min.

Results: the chromatogram obtained with the reference solution shows in the middle a zone due to cineole. The main zone in the chromatogram obtained with the test solution is similar in position and colour to the zone due to cineole in the chromatogram obtained with the reference solution, it also shows an intense violet zone (hydrocarbons) near the solvent front and there may also be other fainter zones.

TESTS

Foreign matter (*2.8.2*): maximum 3 per cent of dark and brown leaves, maximum 5 per cent of stems and maximum 2 per cent of other foreign matter. Cordate or ovate sessile leaves of young branches, with numerous glands on both sides, visible as points in transmitted light, are not present. Determine by using 30 g of the drug to be examined.

Water (*2.2.13*): maximum 100 mL/kg, determined on 20.0 g of the powdered herbal drug (355) (*2.9.12*).

Total ash (*2.4.16*): maximum 6.0 per cent.

ASSAY

Essential oil (*2.8.12*). Use 10.0 g of the drug, cut immediately before determination, a 500 mL round-bottomed flask, 200 mL of *water R* and 100 mL of *glycerol R* as the distillation liquid and 0.5 mL of *xylene R* in the graduated tube. Distil at a rate of 2-3 mL/min for 2 h.

07/2010:0390

EUCALYPTUS OIL

Eucalypti aetheroleum

DEFINITION

Essential oil obtained by steam distillation and rectification from the fresh leaves or the fresh terminal branchlets of various species of *Eucalyptus* rich in 1,8-cineole. The species mainly used are *Eucalyptus globulus* Labill., *Eucalyptus polybractea* R.T.Baker and *Eucalyptus smithii* R.T.Baker.

CHARACTERS

Appearance: colourless or pale yellow liquid.

Odour: reminiscent of 1,8-cineole.

IDENTIFICATION

First identification: B.

Second identification: A.

A. Thin-layer chromatography (*2.2.27*).

Test solution. Dissolve 0.1 g of the essential oil to be examined in *toluene R* and dilute to 10 mL with the same solvent.

Reference solution. Dissolve 20 µL of *α-terpineol R* and 50 µL of *cineole R* in *toluene R* and dilute to 5 mL with the same solvent.

Plate: *TLC silica gel plate R* (5-40 µm) [or *TLC silica gel plate R* (2-10 µm)].

Mobile phase: *ethyl acetate R*, *toluene R* (10:90 *V/V*).

Application: 10 µL [or 2 µL] as bands of 10 mm [or 6 mm].

Development: over a path of 15 cm [or 6 cm].

Drying: in air.

Detection: spray with *anisaldehyde solution R* and heat at 100-105 °C for 5-10 min; examine in daylight.

Results: see below the sequence of zones present in the chromatograms obtained with the reference solution and the test solution. Furthermore, other faint zones may be present in the chromatogram obtained with the test solution, near the solvent front and at the level of α-terpineol.

Top of the plate	
1,8-Cineole: a violet-brown zone	An intense violet-brown zone (1,8-cineole)
α-Terpineol: a violet-brown zone	
Reference solution	**Test solution**

B. Examine the chromatograms obtained in the test for chromatographic profile.

Herbal drugs

Results: the characteristic peaks due to α-pinene, β-pinene, α-phellandrene, limonene and 1,8-cineole in the chromatogram obtained with the test solution are similar in retention time to those in the chromatogram obtained with reference solution (a). Sabinene and camphor may be present in the chromatogram obtained with the test solution.

TESTS

Relative density (*2.2.5*): 0.906 to 0.927.

Refractive index (*2.2.6*): 1.458 to 1.470.

Optical rotation (*2.2.7*): 0° to + 10°.

Solubility in alcohol (*2.8.10*). It is soluble in 5 volumes of *ethanol (70 per cent V/V) R*.

Aldehydes. To 10 mL in a ground-glass-stoppered tube 25 mm in diameter and 150 mm long, add 5 mL of *toluene R* and 4 mL of *alcoholic hydroxylamine solution R*. Shake vigorously and titrate immediately with *0.5 M potassium hydroxide in alcohol (60 per cent V/V)* until the red colour changes to yellow. Continue the titration with shaking; the end-point is reached when the pure yellow colour of the indicator is permanent in the lower layer after shaking vigorously for 2 min and allowing separation to take place. The reaction is complete in about 15 min. Repeat the titration using a further 10 mL of the substance to be examined and, as a reference solution for the end-point, the titrated liquid from the 1st determination to which has been added 0.5 mL of *0.5 M potassium hydroxide in alcohol (60 per cent V/V)*. Not more than 2.0 mL of *0.5 M potassium hydroxide in alcohol (60 per cent V/V)* is required in the 2nd titration.

Chromatographic profile. Gas chromatography (*2.2.28*): use the normalisation procedure.

Test solution. Dissolve 200 µL of the essential oil to be examined in *heptane R* and dilute to 10.0 mL with the same solvent.

Reference solution (a). Dissolve 10 µL of *α-pinene R*, 5 µL of *β-pinene R*, 5 µL of *sabinene R*, 5 µL of *α-phellandrene R*, 10 µL of *limonene R*, 50 µL of *cineole R* and 5 mg of *camphor R* in *heptane R* and dilute to 10 mL with the same solvent.

Reference solution (b). Dissolve 5 µL of *limonene R* in *heptane R* and dilute to 50.0 mL with the same solvent. Dilute 0.5 mL of the solution to 5.0 mL with *heptane R*.

Column:
- *material*: fused silica;
- *size*: *l* = 60 m, Ø = about 0.25 mm;
- *stationary phase*: *macrogol 20 000 R* (film thickness 0.25 µm).

Carrier gas: *helium for chromatography R*.

Flow rate: 1.5 mL/min.

Split ratio: 1:50.

Temperature:

	Time (min)	Temperature (°C)
Column	0 - 5	60
	5 - 33	60 → 200
	33 - 38	200
Injection port		220
Detector		220

Detection: flame ionisation.

Injection: 1 µL.

Elution order: order indicated in the composition of reference solution (a). Record the retention times of these substances.

System suitability: reference solution (a):
- *resolution*: minimum 1.5 between the peaks due to limonene and cineole.

Identification of components: using the retention times determined from the chromatogram obtained with reference solution (a), locate the components of reference solution (a) in the chromatogram obtained with the test solution.

Determine the percentage content of each of these components. The percentages are within the following ranges:
- *α-pinene*: 0.05 per cent to 10.0 per cent;
- *β-pinene*: 0.05 per cent to 1.5 per cent;
- *sabinene*: maximum 0.3 per cent;
- *α-phellandrene*: 0.05 per cent to 1.5 per cent;
- *limonene*: 0.05 per cent to 15.0 per cent;
- *1,8-cineole*: minimum 70.0 per cent;
- *camphor*: maximum 0.1 per cent;
- *disregard limit*: the area of the principal peak in the chromatogram obtained with reference solution (b) (0.05 per cent).

STORAGE

At a temperature not exceeding 25 °C.

01/2014:2412

EUCOMMIA BARK

Eucommiae cortex

DEFINITION

Whole or fragmented, scraped, dried bark of the stem of *Eucommia ulmoides* Oliv.

Content: minimum 0.10 per cent of pinoresinol diglucoside ($C_{32}H_{42}O_{16}$; M_r 683) (dried drug).

IDENTIFICATION

A. Pieces are flat, curved or channelled, varying in size, about 3-7 mm thick. The outer surface is pale brown or greenish-brown, markedly wrinkled or fissured, sometimes with intentional scarring in a rhombus shape; some barks show lenticels. The inner surface is dark reddish-brown or dark purplish-brown, smooth to the touch. The texture is fragile, easily broken, with the edges of the fracture connected by fine, dense, silvery and elastic rubber threads.

B. Microscopic examination (*2.8.23*). The powder is brownish. Examine under a microscope using *chloral hydrate solution R*. The powder shows the following diagnostic characters: many ribbon-shaped latex fragments with a granular surface, twisted or folded back on themselves; numerous sclereids up to 180 µm long and 20-80 µm in diameter, isolated or mostly in groups, with very thick and markedly channelled walls, some sclereids have masses of latex in their lumen; fibres with very narrow lumens, usually associated in groups with sclereids; fragments of hard cork with cells that are polygonal and about 15-40 µm in diameter in surface view and rectangular in transverse section, showing walls that are irregularly thickened and with fine pits on 3 sides and thin on the outer side; ovoid parenchyma cells.

C. To 1.0 g of the powdered herbal drug (355) (*2.9.12*) add 10 mL of *methylene chloride R* and allow to stand for 2 h. Filter and evaporate the filtrate to dryness. Take up the residue with 1.0 mL of *anhydrous ethanol R*; an elastic film is formed.

D. Thin-layer chromatography (*2.2.27*).

Test solution. To 1 g of the powdered herbal drug (355) (*2.9.12*) add 10 mL of *methylene chloride R*. Sonicate for 10 min. Discard the liquid phase and repeat the extraction with another 10 mL of *methylene chloride R*. Discard the liquid phase again. Dry the residue in air. Add 7 mL of *methanol R*. Sonicate in a centrifuge tube at 60 °C for 20 min. Centrifuge; use the supernatant.

Reference solution. Dissolve 2 mg of *5,7-dihydroxy-4-methylcoumarin R* and 20 mg of *β-sitosterol R* in 10 mL of *methanol R*.

Plate: *TLC silica gel plate R* (5-40 µm) [or *TLC silica gel plate R* (2-10 µm)].

Mobile phase: *anhydrous formic acid R*, *ethyl acetate R*, *toluene R* (1:35:65 *V/V/V*).

Application: 20 µL [or 10 µL] as bands of 10 mm [or 8 mm].

Development: over a path of 10 cm [or 6 cm].

Drying: in air.

Detection: treat with *anisaldehyde solution R* and heat at 100-105 °C for 5 min; examine in daylight.

Results: see below the sequence of zones present in the chromatograms obtained with the reference solution and the test solution. Furthermore, other faint zones may be present in the chromatogram obtained with the test solution.

Top of the plate	
	A violet zone
———	———
	A violet zone
β-Sitosterol: a blue zone	A violet zone
———	———
	A violet zone
5,7-Dihydroxy-4-methylcoumarin: an orange zone	
	Several zones
	Several zones
Reference solution	**Test solution**

TESTS

Loss on drying (*2.2.32*): maximum 12.0 per cent, determined on 1.000 g of the powdered herbal drug (355) (*2.9.12*) by drying in an oven at 105 °C.

Total ash (*2.4.16*): maximum 10.0 per cent.

ASSAY

Liquid chromatography (*2.2.29*).

Test solution. Treat 2.00 g of the freshly powdered herbal drug (355) (*2.9.12*) with 75 mL of *methylene chloride R* in a continuous extraction apparatus (Soxhlet type) for 1 h. Cool. Discard the organic solution and replace with 75 mL of *methanol R*. Extract for 6 h in the same apparatus. Filter and evaporate the filtrate to dryness. Take up the residue with 10.0 mL of a mixture of *methanol R* and *water R* (30:70 *V/V*). Centrifuge. Filter through a membrane filter (nominal pore size 0.45 µm).

Reference solution (a). Treat 2.00 g of *eucommia bark HRS* with 75 mL of *methylene chloride R* in a continuous extraction apparatus (Soxhlet type) for 1 h. Cool. Discard the organic solution and replace with 75 mL of *methanol R*. Extract for 6 h in the same apparatus. Filter and evaporate the filtrate to dryness. Take up the residue with 10.0 mL of a mixture of *methanol R* and *water R* (30:70 *V/V*). Centrifuge. Filter through a membrane filter (nominal pore size 0.45 µm).

Reference solution (b). Dissolve 20.0 mg of *caffeine CRS* in mobile phase A and dilute to 20.0 mL with mobile phase A. Dilute 1.0 mL of the solution to 25.0 mL with mobile phase A.

Column:
- *size*: *l* = 0.25 m, Ø = 4.0 mm;
- *stationary phase*: *end-capped octadecylsilyl silica gel for chromatography R*.

Mobile phase:
- *mobile phase A*: 1.0 g/L solution of *phosphoric acid R*;
- *mobile phase B*: *acetonitrile R*;

Time (min)	Mobile phase A (per cent *V/V*)	Mobile phase B (per cent *V/V*)
0 - 35	87 → 75	13 → 25
35 - 40	75 → 0	25 → 100

Flow rate: 1.0 mL/min.

Detection: spectrophotometer at 278 nm.

Injection: 20 µL.

Identification of peaks: use the chromatogram supplied with *eucommia bark HRS* and the chromatogram obtained with reference solution (a) to identify the peak due to pinoresinol diglucoside and peak 2.

Retention time: caffeine = about 8 min; pinoresinol diglucoside = about 10 min.

System suitability: reference solution (a):
- *resolution*: minimum 2.0 between the peak due to pinoresinol diglucoside and peak 2.

Calculate the percentage content of pinoresinol diglucoside using the following expression:

$$\frac{A_1 \times m_2 \times 5.6 \times p}{A_2 \times m_1 \times 50}$$

A_1 = area of the peak due to pinoresinol diglucoside in the chromatogram obtained with the test solution;

A_2 = area of the peak due to caffeine in the chromatogram obtained with reference solution (b);

m_1 = mass of the herbal drug to be examined used to prepare the test solution, in grams;

m_2 = mass of *caffeine CRS* used to prepare reference solution (b), in grams;

p = percentage content of caffeine in *caffeine CRS*;

5.6 = correction factor for caffeine with respect to pinoresinol diglucoside.

04/2013:0824

FENNEL, BITTER

Foeniculi amari fructus

DEFINITION

Dry cremocarps and mericarps of *Foeniculum vulgare* Mill. ssp. *vulgare* var. *vulgare*.

Content:
- *essential oil*: minimum 40 mL/kg (anhydrous drug);
- *anethole*: minimum 60.0 per cent in the essential oil;
- *fenchone*: minimum 15.0 per cent in the essential oil.

CHARACTERS

Bitter fennel is greenish-brown, brown or green.

IDENTIFICATION

A. The fruit of bitter fennel is a cremocarp, of almost cylindrical shape with a rounded base and a narrower summit crowned with a large stylopod. It is generally 3-12 mm long and 3-4 mm wide. The mericarps, usually free, are glabrous. Each bears 5 prominent, slightly carenated ridges. When cut transversely, 4 vittae on the dorsal surface and 2 on the commissural surface may be seen with a lens.

B. Microscopic examination (*2.8.23*). The powder is greyish-brown or greyish-yellow. Examine under a microscope using *chloral hydrate solution R*. The powder shows the following diagnostic characters (Figure 0824.-1): yellow fragments of wide secretory canals, often made up of yellowish-brown-walled polygonal secretory cells

Herbal drugs

[D, H]; reticulate parenchyma of the mesocarp [B]; numerous fibre bundles [G] from the ridges [Ga], often accompanied by narrow spiral vessels [Gb]; very numerous endosperm fragments [F] containing aleurone grains [Fb] and very small cluster crystals of calcium oxalate [Fa]; some fibre bundles from the carpophore [E]; fragments of the endocarp, in surface view [A, K], consisting of thin-walled, transversely elongated cells, 2-9 µm wide, having a parquetry arrangement, sometimes accompanied by the inner layer of the mesocarp [Aa]; fragments of the epicarp with stomata accompanied by oil droplets [C]; very numerous oil droplets [J].

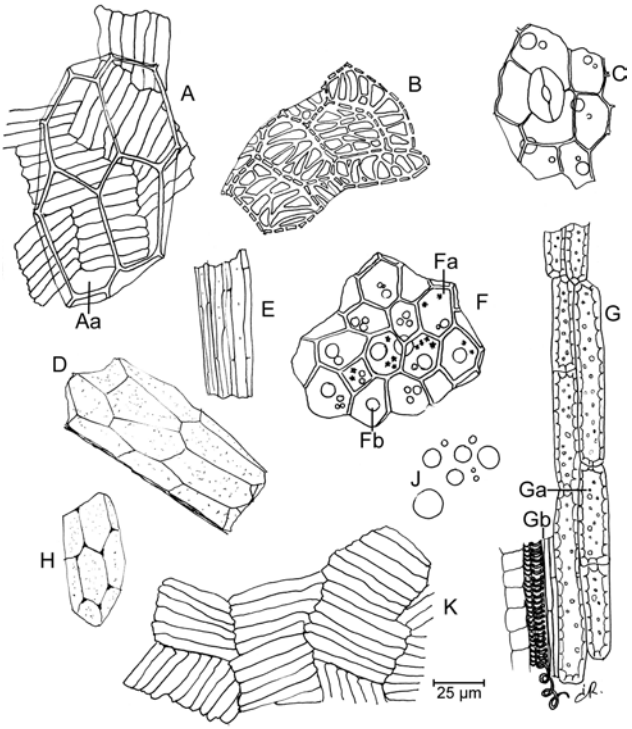

Figure 0824.-1. – *Illustration for identification test B of powdered herbal drug of bitter fennel*

C. Thin-layer chromatography (*2.2.27*).

Test solution. Shake 0.3 g of the freshly powdered herbal drug (1400) (*2.9.12*) with 5.0 mL of *methylene chloride R* for 15 min. Filter and carefully evaporate the filtrate to dryness on a water-bath at 60 °C. Dissolve the residue in 0.5 mL of *toluene R*.

Reference solution. Dissolve 50 µL of *anethole R* and 10 µL of *fenchone R* in 5.0 mL of *hexane R*.

Plate: *TLC silica gel GF_{254} plate R*.

Mobile phase: *hexane R*, *toluene R* (20:80 *V/V*).

Application: 10 µL as bands of 20 mm by 3 mm.

Development: over a path of 10 cm.

Drying: in air.

Detection A: examine in ultraviolet light at 254 nm.

Results A: the chromatograms show in the central part a quenching zone due to anethole.

Detection B: treat with *sulfuric acid R* and heat at 140 °C for 5-10 min until a yellow zone due to fenchone appears in the lower third of the chromatograms.

Results B: anethole appears as a violet band in the central part; the chromatogram obtained with the test solution also shows a reddish-brown zone in its upper third (terpenes).

TESTS

Estragole. Gas chromatography (*2.2.28*): use the normalisation procedure.

Test solution. Dilute the mixture of essential oil and *xylene R* obtained in the determination of essential oil to 5.0 mL with *xylene R*, by rinsing the apparatus.

Reference solution. Dissolve 5 mg of *estragole R* in 0.5 mL of *xylene R*.

Column:

- *size*: *l* = 30-60 m, Ø = 0.3 mm;
- *stationary phase*: *macrogol 20 000 R*.

Carrier gas: *nitrogen for chromatography R*.

Flow rate: 0.40 mL/min.

Split ratio: 1:200.

Temperature:

	Time (min)	Temperature (°C)
Column	0 - 4	60
	4 - 26	60 → 170
	26 - 41	170
Injection port		220
Detector		270

Detection: flame ionisation.

Injection: 1 µL.

Limit:

- *estragole*: maximum 5.0 per cent in the essential oil obtained in the assay.

Foreign matter (*2.8.2*): maximum 1.5 per cent of peduncles and maximum 1.5 per cent of other foreign matter.

Water (*2.2.13*): maximum 100 mL/kg, determined on 20.0 g of the powdered herbal drug (710) (*2.9.12*).

Total ash (*2.4.16*): maximum 10.0 per cent.

ASSAY

Essential oil (*2.8.12*). Use a 500 mL round-bottomed flask and 200 mL of *water R* as the distillation liquid. Reduce the herbal drug to a coarse powder (1400) (*2.9.12*) and immediately use 5.0 g for the determination. Introduce 0.50 mL of *xylene R* in the graduated tube. Distil at a rate of 2-3 mL/min for 2 h.

Anethole and fenchone. Gas chromatography (*2.2.28*) as described in the test for estragole with the following modifications.

Reference solution. Dissolve 5 mg of *fenchone R* and 5 mg of *anethole R* in 0.5 mL of *xylene R*.

Elution order: the order indicated in the composition of the reference solution; record the retention times of these substances.

STORAGE

Protected from moisture.

04/2011:0825

FENNEL, SWEET

Foeniculi dulcis fructus

DEFINITION

Dry cremocarps and mericarps of *Foeniculum vulgare* Mill. subsp. *vulgare* var. *dulce* (Mill.) Batt. & Trab.

Content:

- *essential oil*: minimum 20 mL/kg (anhydrous drug);
- *anethole*: minimum 80.0 per cent in the essential oil.

Herbal drugs

CHARACTERS

Sweet fennel is pale green or pale yellowish-brown.

IDENTIFICATION

A. The fruit of sweet fennel is a cremocarp of almost cylindrical shape with a rounded base and a narrowed summit crowned with a large stylopod. It is generally 3-12 mm long and 3-4 mm wide. The mericarps, usually free, are glabrous. Each bears 5 prominent, slightly carenated ridges. When cut transversely, 4 vittae on the dorsal surface and 2 on the commissural surface may be seen with a lens.

B. Microscopic examination (*2.8.23*). The powder is greyish-brown or greyish-yellow. Examine under a microscope using *chloral hydrate solution R*. The powder shows the following diagnostic characters (Figure 0825.-1.): yellow fragments of wide secretory canals, often made up of yellowish-brown-walled polygonal secretory cells [D, H]; reticulate parenchyma of the mesocarp [B]; numerous fibre bundles [G] from the ridges [Ga], often accompanied by narrow spiral vessels [Gb]; very numerous endosperm fragments [F] containing aleurone grains [Fb] and very small calcium oxalate cluster crystals [Fa]; some fibre bundles from the carpophore [E]; fragments of the endocarp, in surface view [K, A], consisting of thin-walled, transversely elongated cells 2-9 µm wide, having a parquetry arrangement, sometimes accompanied by the inner layer of the mesocarp [Aa]; fragments of the epicarp with stomata accompanied by oil droplets [C]; very numerous oil droplets [J].

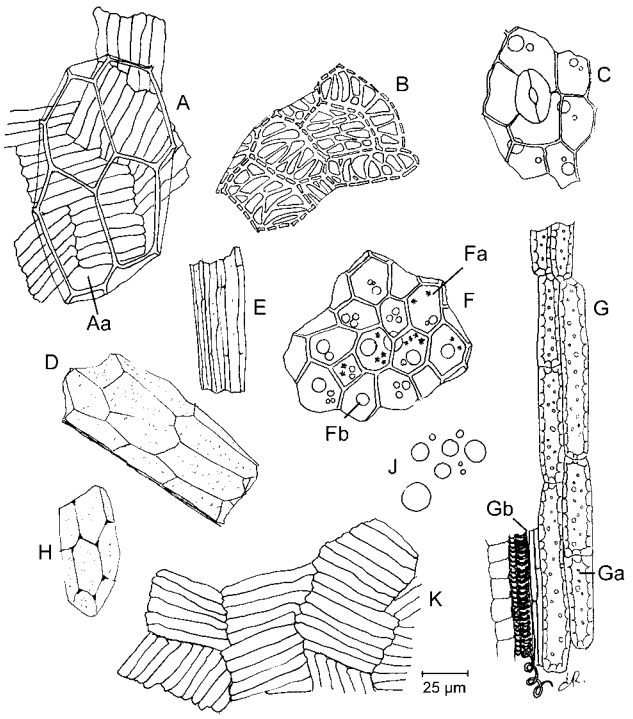

Figure 0825.-1. – *Illustration for identification test B of powdered herbal drug of sweet fennel*

C. Thin-layer chromatography (*2.2.27*).

Test solution. Shake 0.3 g of the freshly powdered herbal drug (1400) (*2.9.12*) with 5.0 mL of *methylene chloride R* for 15 min. Filter and carefully evaporate the filtrate to dryness on a water-bath at 60 °C. Dissolve the residue in 0.5 mL of *toluene R*.

Reference solution. Dissolve 60 µL of *anethole R* in 5.0 mL of *hexane R*.

Plate: *TLC silica gel GF_{254} plate R*.

Mobile phase: *hexane R*, *toluene R* (20:80 *V/V*).

Application: 10 µL as bands of 20 mm by 3 mm.

Development: over a path of 10 cm.

Drying: in air.

Detection A: examine in ultraviolet light at 254 nm.

Results A: the chromatograms show in the central part a quenching zone due to anethole.

Detection B: spray with *sulfuric acid R* and heat at 140 °C for 5 min; examine in daylight.

Results B: the chromatograms show in the central part a violet band due to anethole; the chromatogram obtained with the test solution also shows a reddish-brown zone in the upper third (terpenes).

TESTS

Estragole and fenchone. Gas chromatography (*2.2.28*): use the normalisation procedure.

Test solution. Dilute the mixture of essential oil and *xylene R* obtained in the assay of essential oil to 5.0 mL with *xylene R*, by rinsing the apparatus.

Reference solution. Dissolve 5 mg of *estragole R* and 5 mg of *fenchone R* in 0.5 mL of *xylene R*.

Column:

– *size*: *l* = 30-60 m, Ø = 0.3 mm;

– *stationary phase*: *macrogol 20 000 R*.

Carrier gas: *nitrogen for chromatography R*.

Flow rate: 0.40 mL/min.

Split ratio: 1:200.

	Time (min)	Temperature (°C)
Column	0 - 4	60
	4 - 26	60 → 170
	26 - 41	170
Injection port		220
Detector		270

Detection: flame ionisation.

Injection: 1 µL.

Limits:

– *estragole*: maximum 10.0 per cent in the essential oil;

– *fenchone*: maximum 7.5 per cent in the essential oil.

Foreign matter (*2.8.2*): maximum 1.5 per cent of peduncles and maximum 1.5 per cent of other foreign matter.

Water (*2.2.13*): maximum 80 mL/kg, determined on 20.0 g of the powdered herbal drug (710) (*2.9.12*).

Total ash (*2.4.16*): maximum 10.0 per cent.

ASSAY

Essential oil (*2.8.12*). Use 10.0 g of the herbal drug reduced to a coarse powder (1400) (*2.9.12*) immediately before the assay, a 500 mL round-bottomed flask, 200 mL of *water R* as the distillation liquid, and 0.50 mL of *xylene R* in the graduated tube. Distil at a rate of 2-3 mL/min for 2 h.

Anethole. Gas chromatography (*2.2.28*) as described in the test for estragole and fenchone with the following modification.

Reference solution. Dissolve 5 mg of *anethole R* in 0.5 mL of *xylene R*.

STORAGE

Protected from moisture.

01/2008:1323
corrected 6.6

FENUGREEK

Trigonellae foenugraeci semen

DEFINITION

Dried, ripe seeds of *Trigonella foenum-graecum* L.

CHARACTERS

Strong characteristic aromatic odour.

IDENTIFICATION

A. The seed is hard, flattened, brown or reddish-brown and more or less rhomboidal with rounded edges. It is 3-5 mm long, 2-3 mm wide and 1.5-2 mm thick. The widest surfaces are marked by a groove that divides the seed into 2 unequal parts. The smaller part contains the radicle; the larger part contains the cotyledons.

B. Reduce to a powder (355) (*2.9.12*). The powder is yellowish-brown. Examine under a microscope using *chloral hydrate solution R*. The powder shows the following diagnostic characters: fragments of the testa in sectional view with thick cuticle covering lageniform epidermal cells, with an underlying hypodermis of large cells, narrower at the upper end and constricted in the middle, with bar-like thickenings of the radial walls; yellowish-brown fragments of the epidermis in surface view, composed of small, polygonal cells with thickened and pitted walls, frequently associated with the hypodermal cells, circular in outline with thickened and closely beaded walls; fragments of the hypodermis viewed from below, composed of polygonal cells whose bar-like thickenings extend to the upper and lower walls; parenchyma of the testa with elongated, rectangular cells with slightly thickened and beaded walls; fragments of endosperm with irregularly thickened, sometimes elongated cells, containing mucilage.

C. Thin-layer chromatography (*2.2.27*).

Test solution. Place 1.0 g of the powdered herbal drug (710) (*2.9.12*) in a 25 mL conical flask and add 5.0 mL of *methanol R*. Heat in a water-bath at 65 °C for 5 min. Cool and filter.

Reference solution. Dissolve 3.0 mg of *trigonelline hydrochloride R* in 1.0 mL of *methanol R*.

Plate: *TLC silica gel F_{254} plate R*.

Mobile phase: *water R*, *methanol R* (30:70 *V/V*).

Application: 20 µL of the test solution and 10 µL of the reference solution, as bands.

Development: over a path of 10 cm.

Drying: in air.

Detection A: examine in ultraviolet light at 254 nm.

Results A: the chromatogram obtained with the test solution shows in its lower half a quenching zone similar in position and fluorescence to the zone in the chromatogram obtained with the reference solution.

Detection B: spray with *potassium iodobismuthate solution R2*.

Results B: the chromatogram obtained with the test solution shows an intense orange-red zone similar in position and colour to the zone in the chromatogram obtained with the reference solution. It also shows in its upper half, a broad light brownish-yellow zone (triglycerides).

TESTS

Loss on drying (*2.2.32*): maximum 12.0 per cent, determined on 1.000 g of the powdered herbal drug by drying in an oven at 105 °C for 2 h.

Total ash (*2.4.16*): maximum 5.0 per cent.

Swelling index (*2.8.4*): minimum 6, determined on the powdered herbal drug (710) (*2.9.12*).

01/2008:1516
corrected 6.0

FEVERFEW

Tanaceti parthenii herba

DEFINITION

Dried, whole or fragmented aerial parts of *Tanacetum parthenium* (L.) Schultz Bip.

Content: minimum 0.20 per cent of parthenolide ($C_{15}H_{20}O_3$; M_r 248.3) (dried drug).

CHARACTERS

Camphoraceous odour.

IDENTIFICATION

A. The leafy, more or less branched stem has a diameter of up to 5 mm; it is almost quadrangular, channelled longitudinally and slightly pubescent. The leaves are ovate, 2-5 cm long, sometimes up to 10 cm, yellowish-green, petiolate and alternate. They are pinnate or bipinnate, deeply divided into 5-9 segments, each with a coarsely crenate margin and an obtuse apex. Both surfaces are somewhat pubescent and the midrib is prominent on the lower surface. When present, the flowering heads are 12-22 mm in diameter with long pedicels; they are clustered into broad corymbs consisting of 5-30 flower-heads. The hemispherical involucre is 6-8 mm wide and consists of many overlapping bracts, which are rather narrow, obtuse and scarious and have membranous margins. The central flowers are yellow, hermaphrodite, tube-shaped with 5 teeth and have 5 stamens inserted in the corolla; the filaments of the stamens are separate from each other but the anthers are fused into a tube through which passes the style, bearing 2 stigmatic branches. The peripheral flowers are female and have a white, three-toothed ligule, 2-7 mm long. The fruit is an achene, 1.2-1.5 mm long, brown when ripe, with 5-10 white longitudinal ribs. It is glandular and bears a short, crenate, membranous crown.

B. Reduce to a powder (355) (*2.9.12*). The powder is yellowish-green. Examine under a microscope using *chloral hydrate solution R*. The powder shows the following diagnostic characters: numerous large, multicellular, uniseriate covering trichomes consisting of a rhomboidal basal cell, 3-5 smaller, thick-walled rectangular cells and a very long, flat, slender terminal cell, often curved at a right angle to the axis of the basal cell; glandular trichomes with a short, biseriate, 2-4 celled stalk and a biseriate head of 4 cells around which the cuticle forms a bladder-like covering; epidermal cells with very sinuous, anticlinal walls, a striated cuticle and anomocytic stomata (*2.8.3*); numerous spirally and annularly thickened vessels; stratified parenchyma and collenchyma. Fragments of disc florets containing pale yellow amorphous masses and small rosette crystals of calcium oxalate may be present; spherical pollen grains about 25 µm in diameter, with 3 pores and a spiny exine may be present.

C. Thin-layer chromatography (*2.2.27*).

Test solution. To 1 g of the powdered herbal drug (355) (*2.9.12*) add 20 mL of *methanol R*. Heat in a water-bath at 60 °C for 15 min. Allow to cool and filter. Evaporate to dryness under reduced pressure and dissolve the residue in 2 mL of *methanol R*.

Reference solution. Dissolve 5 mg of *parthenolide R* in *methanol R* and dilute to 5 mL with the same solvent.

Plate: *TLC silica gel plate R*.

Mobile phase: *acetone R*, *toluene R* (15:85 *V/V*).

Herbal drugs

Application: 20 µL, as bands.

Development: over a path of 10 cm.

Drying: in air.

Detection: spray with a 5 g/L solution of *vanillin R* in a mixture of 20 volumes of *anhydrous ethanol R* and 80 volumes of *sulfuric acid R*. Examine in daylight after 5 min.

Results: the chromatogram obtained with the test solution shows in its central part a blue principal zone that is similar in position, colour and size to the principal zone in the chromatogram obtained with the reference solution, and somewhat below the principal zone a 2nd blue zone may be present; 1 or 2 blue zones are also present in its lower third; other violet zones may be present.

TESTS

Foreign matter (*2.8.2*): maximum 10.0 per cent of stem with a diameter greater than 5 mm and maximum 2.0 per cent of other foreign matter.

Loss on drying (*2.2.32*): maximum 10.0 per cent, determined on 1.000 g of the powdered herbal drug (355) (*2.9.12*) by drying in an oven at 105 °C for 2 h.

Total ash (*2.4.16*): maximum 12.0 per cent.

ASSAY

Liquid chromatography (*2.2.29*).

Test solution. Completely reduce about 50 g of the drug to be examined to a powder (355) (*2.9.12*). After homogenisation, introduce 1.00 g of the powdered herbal drug into a flask and add 40 mL of *methanol R*. Heat in a water-bath at 60 °C for 10 min. Allow to cool and filter. Rinse the filter with 15 mL of *methanol R*. Take up the residue with 40 mL of *methanol R*. Repeat the operation. Collect the filtrates and rinsings and evaporate to dryness under reduced pressure. Take up the residue with *methanol R* and dilute to 20.0 mL with the same solvent. Dilute 10.0 mL of this solution to 50.0 mL with the mobile phase. Filter (0.45 µm).

Reference solution. Dissolve 5.0 mg of *parthenolide R* in *methanol R* and dilute to 10.0 mL with the same solvent. Dilute 2.0 mL of this solution to 50.0 mL with the mobile phase.

Column:

- *size*: *l* = 0.25 m, Ø = 4.6 mm;
- *stationary phase*: *octadecylsilyl silica gel for chromatography R* (5 µm).

Mobile phase: *acetonitrile R*, *water R* (40:60 *V/V*).

Flow rate: 1 mL/min.

Detection: spectrophotometer at 220 nm.

Injection: 20 µL.

Retention time: parthenolide = about 11.5 min.

Calculate the percentage content of parthenolide using the following expression:

$$\frac{A_1 \times m_2 \times 40}{A_2 \times m_1}$$

A_1 = area of the peak due to parthenolide in the chromatogram obtained with the test solution;

A_2 = area of the peak due to parthenolide in the chromatogram obtained with the reference solution;

m_1 = mass of the herbal drug to be examined in the test solution, in grams;

m_2 = mass of parthenolide in the reference solution, in grams.

01/2014:2433

FLEECEFLOWER ROOT

Polygoni multiflori radix

DEFINITION

Whole or fragmented dried tuberous root of *Fallopia multiflora* (Thunb.) Haraldson (syn. *Polygonum multiflorum* Thunb.).

Content: minimum 1.0 per cent of 2,3,5,4′-tetrahydroxystilbene-2-*O*-β-D-glucoside ($C_{20}H_{22}O_9$; M_r 406.4) (dried drug).

IDENTIFICATION

A. The whole drug consists of an irregular, fusiform, tuberous, root 6-15 cm long and 4-12 cm in diameter; the fragmented drug consists of slices or irregular pieces.

The external surface of the root is reddish-brown with irregular wrinkles, resembling transversely elongated lenticels, and with fine rootlet scars. The texture is dense, compact and granular. The fracture is pale yellowish-brown or reddish-brown. The drug is powdery when it is fractured. In the cortex there are 4-11 bundles giving rise to a cloud-like appearance. The central xylem is large, sometimes distinguishable as a central lignified part.

B. Microscopic examination (*2.8.23*). The powder is yellowish-brown. Examine under a microscope using *chloral hydrate solution R*. The powder shows the following diagnostic characters: cluster crystals of calcium oxalate 10-80 µm, sometimes up to 160 µm, in diameter, with obtuse angles; rare, relatively large, isolated tetragonal prism crystals; fragments of parenchyma consisting of thin-walled, sub-rounded or rectangular cells, sometimes containing brown, yellowish-brown or reddish-brown inclusions; rare fragments of cork consisting of several layers of regular cells filled with brown contents; fragments of pitted vessels 15-180 µm in diameter; few groups of xylem fibres; scattered brown masses, varying in shape, size and colour. Examine under a microscope using a 50 per cent *V/V* solution of *glycerol R*. The powder shows simple or 2-9 compound starch granules, the simple granules are sub-rounded, 4-50 µm in diameter, with a V-shaped, stellate or Y-shaped hilum, the large granules show clearly visible layers.

C. Thin-layer chromatography (*2.2.27*).

Test solution. To 0.500 g of the powdered herbal drug (355) (*2.9.12*) add 5 mL of *methanol R*. Heat in a water-bath at 60 °C for 15 min and filter.

Reference solution. Dissolve 1 mg of *emodin R* and 1 mg of *resveratrol R* in 2 mL of *methanol R*.

Plate: *TLC silica gel F_{254} plate R* (5-40 µm) [or *TLC silica gel F_{254} plate R* (2-10 µm)].

Mobile phase: *glacial acetic acid R*, *anhydrous ethanol R*, *toluene R* (1:4:16 *V/V/V*).

Application: 20 µL [or 5 µL] as bands of 10 mm [or 8 mm].

Development: over a path of 10 cm [or 6 cm].

Drying: in air.

Detection: examine in ultraviolet light at 365 nm.

Results: see below the sequence of zones present in the chromatograms obtained with the reference solution and the test solution. Furthermore, other faint zones may be present in the chromatogram obtained with the test solution.

Herbal drugs

Top of the plate	
	A yellow fluorescent zone
Emodin: a yellow fluorescent zone	A yellow fluorescent zone (emodin)
Resveratrol: a light blue fluorescent zone	
	A light blue fluorescent zone
Reference solution	**Test solution**

TESTS

Loss on drying (*2.2.32*): maximum 10.0 per cent, determined on 1.000 g of the powdered herbal drug (355) (*2.9.12*) by drying in an oven at 105 °C for 2 h.

Total ash (*2.4.16*): maximum 5.0 per cent.

Ash insoluble in hydrochloric acid (*2.8.1*): maximum 2.0 per cent.

ASSAY

Liquid chromatography (*2.2.29*).

Test solution. Weigh 0.250 g of the powdered herbal drug (355) (*2.9.12*) in a 100 mL glass vial with a screw cap. Add 50.0 mL of a 50 per cent *V/V* solution of *methanol R*, close and extract for 1 h using ultrasound. Filter the solution through a membrane filter (nominal pore size 0.45 µm).

Reference solution (a). Dissolve 10.0 mg of *resveratrol CRS* in *methanol R* and dilute to 20.0 mL with the same solvent. Dilute 1.0 mL of the solution to 10.0 mL with *methanol R*.

Reference solution (b). Weigh 0.250 g of *fleeceflower root HRS* in a 100 mL glass vial with a screw cap. Add 50.0 mL of a 50 per cent *V/V* solution of *methanol R*, close and extract for 1 h using ultrasound. Filter the solution through a membrane filter (nominal pore size 0.45 µm).

Column:
- *size*: *l* = 0.125 m, Ø = 4.6 mm;
- *stationary phase*: *octadecylsilyl silica gel for chromatography R* (5 µm);
- *temperature*: 30 °C.

Mobile phase:
- *mobile phase A*: 0.1 per cent *V/V* solution of *anhydrous formic acid R*;
- *mobile phase B*: *acetonitrile R*;

Time (min)	Mobile phase A (per cent *V/V*)	Mobile phase B (per cent *V/V*)
0 - 15	90 → 70	10 → 30
15 - 16	70 → 20	30 → 80
16 - 21	20	80

Flow rate: 1.0 mL/min.

Detection: spectrophotometer at 320 nm.

Injection: 10 µL.

Identification of peaks: use the chromatogram supplied with *fleeceflower root HRS* and the chromatogram obtained with reference solution (b) to identify the peak due to 2,3,5,4′-tetrahydroxystilbene-2-*O*-β-D-glucoside and peak 2 (unknown).

Retention time: 2,3,5,4′-tetrahydroxystilbene-2-*O*-β-D-glucoside = about 12 min; peak 2 = about 13 min; resveratrol = about 17 min.

System suitability: reference solution (b):
- *resolution*: minimum 2.0 between the peak due to 2,3,5,4′-tetrahydroxystilbene-2-*O*-β-D-glucoside and peak 2.

Calculate the percentage content of 2,3,5,4′-tetrahydroxystilbene-2-*O*-β-D-glucoside using the following expression:

$$\frac{A_1 \times m_2 \times p}{A_2 \times m_1 \times 4 \times 0.5}$$

A_1 = area of the peak due to 2,3,5,4′-tetrahydroxystilbene-2-*O*-β-D-glucoside in the chromatogram obtained with the test solution;

A_2 = area of the peak due to resveratrol in the chromatogram obtained with reference solution (a);

m_1 = mass of the herbal drug to be examined used to prepare the test solution, in grams;

m_2 = mass of *resveratrol CRS* used to prepare reference solution (a), in grams;

p = percentage content of resveratrol in *resveratrol CRS*.

0.5 = correction factor for resveratrol with respect to 2,3,5,4′-tetrahydroxystilbene-2-*O*-β-D-glucoside.

01/2013:2478

FOURSTAMEN STEPHANIA ROOT

Stephaniae tetrandrae radix

DEFINITION

Scraped, cut and dried root of *Stephania tetrandra* S.Moore.

Content: minimum 1.6 per cent of the sum of tetrandrine and fangchinoline, expressed as tetrandrine ($C_{38}H_{42}N_2O_6$; M_r 623) (dried drug).

IDENTIFICATION

A. The root is found as slices or irregularly cylindrical or semi-cylindrical pieces, mostly tortuous, about 0.5-1 cm thick and 1-5 cm in diameter. The greyish-yellow outer surface usually shows deep and sinuous transversal striations; the curved parts are knotty and bumpy. The texture is dense and compact. The cut surface is greyish-white and shows radial striations.

B. Reduce to a powder (355) (*2.9.12*). The powder is whitish-grey. Examine under a microscope using *chloral hydrate solution R*. The powder shows the following diagnostic characters: numerous fragments of parenchyma with cells having slightly thickened and moniliform walls; reticulate or pitted xylem vessels accompanied by fibres; fragments of phelloderm containing sclereids; rare cork fragments; rare, fine, rod-shaped calcium oxalate crystals. Examine under a microscope using a 50 per cent *V/V* solution of *glycerol R*. The powder shows very many round or truncated, simple or 2- or 3-compound starch granules, 10-20 µm in diameter, with a punctiform hilum.

C. Thin-layer chromatography (*2.2.27*).

Test solution. To 0.4 g of the powdered herbal drug (355) (*2.9.12*) add 10 mL of a mixture of 1 volume of *anhydrous formic acid R*, 9 volumes of *water R* and 40 volumes of *methanol R*. Sonicate at 25 °C for 10 min and filter.

Reference solution. Dissolve 10 mg of *protopine hydrochloride R* and 10 mg of *tetrandrine R* in *methanol R* and dilute to 10 mL with the same solvent.

Plate: *TLC silica gel plate R* (5-40 µm) [or *TLC silica gel plate R* (2-10 µm)].

Mobile phase: *concentrated ammonia R*, *methanol R*, *ethyl acetate R*, *toluene R* (0.3:5:10:10 *V/V/V/V*).

Application: 10 µL [or 5 µL] as bands of 10 mm [or 8 mm].

Development: over a path of 10 cm [or 6 cm].

Drying: in a current of warm air for 5 min.

Herbal drugs

Detection: treat with a 5 g/L solution of *iodine R* in *ethanol (96 per cent) R* until the background becomes yellow; examine in daylight after the yellow colour has disappeared.

Results: see below the sequence of zones present in the chromatograms obtained with the reference solution and the test solution. Furthermore, other faint zones may be present in the chromatogram obtained with the test solution.

Top of the plate	
Protopine: an orange zone _____ Tetrandrine: an orange zone _____	_____ An orange zone (tetrandrine) An orange zone _____
Reference solution	**Test solution**

TESTS

Aristolochia fangchi. Test for aristolochic acids in herbal drugs (*2.8.21*). The drug to be examined complies with method A.

Loss on drying (*2.2.32*): maximum 10.0 per cent, determined on 1.000 g of the powdered herbal drug (355) (*2.9.12*) by drying in an oven at 105 °C for 2 h.

Total ash (*2.4.16*): maximum 4.0 per cent.

Ash insoluble in hydrochloric acid (*2.8.1*): maximum 1.0 per cent.

ASSAY

Tetrandrine and fangchinoline. Liquid chromatography (*2.2.29*).

Test solution. In a 50 mL round-bottomed flask, weigh 0.500 g of the powdered herbal drug (355) (*2.9.12*). Add 25 mL of a 2 per cent *V/V* solution of *hydrochloric acid R* in *methanol R*. Weigh. Heat under a reflux condenser on a water-bath at 60 °C for 30 min. Cool and weigh. Adjust to the initial weight using a 2 per cent *V/V* solution of *hydrochloric acid R* in *methanol R*. Filter. Dilute 5.0 mL of the filtrate to 10.0 mL with the mobile phase.

Reference solution. Dissolve 10.0 mg of *tetrandrine CRS* in 5 mL of *methanol R* and dilute to 10.0 mL with the mobile phase.

Column:

- *size*: *l* = 0.25 m, Ø = 4.6 mm;
- *stationary phase*: *octadecylsilyl silica gel for chromatography R* (5 µm).

Mobile phase: 4.1 g/L solution of *sodium laurylsulfonate for chromatography R* in a mixture of 1 volume of *glacial acetic acid R*, 30 volumes of *methanol R*, 30 volumes of *water R* and 40 volumes of *acetonitrile R*.

Flow rate: 2.0 mL/min.

Detection: spectrophotometer at 280 nm.

Injection: 20 µL.

Run time: 30 min.

Relative retention with reference to tetrandrine (retention time = about 18 min): fangchinoline = about 0.7.

System suitability: test solution:

- *resolution*: minimum 3.0 between the peaks due to fangchinoline and tetrandrine.

Calculate the percentage content of tetrandrine and fangchinoline, expressed as tetrandrine, using the following expression:

$$\frac{(A_1 + A_3) \times m_2 \times p \times 5}{A_2 \times m_1}$$

A_1 = area of the peak due to tetrandrine in the chromatogram obtained with the test solution;

A_2 = area of the peak due to tetrandrine in the chromatogram obtained with the reference solution;

A_3 = area of the peak due to fangchinoline in the chromatogram obtained with the test solution;

m_1 = mass of the herbal drug to be examined used to prepare the test solution, in grams;

m_2 = mass of *tetrandrine CRS* used to prepare the reference solution, in grams;

p = assigned percentage content of tetrandrine in *tetrandrine CRS*.

04/2011:0025

FRANGULA BARK

Frangulae cortex

DEFINITION

Dried, whole or fragmented bark of the stems and branches of *Rhamnus frangula* L. (*Frangula alnus* Miller).

Content: minimum 7.0 per cent of glucofrangulins, expressed as glucofrangulin A ($C_{27}H_{30}O_{14}$; M_r 578.5) (dried drug).

IDENTIFICATION

A. The bark occurs in curved, almost flat or rolled fragments or in single or double quilled pieces usually 0.5-2 mm thick and variable in length and width. The greyish-brown or dark brown outer surface is wrinkled longitudinally and covered with numerous greyish, transversely elongated lenticels; when the outer layers are removed, a dark red layer is exposed. The orange-brown or reddish-brown inner surface is smooth and bears fine longitudinal striations; it becomes red when treated with alkali. The fracture is short, fibrous in the inner part.

B. Microscopic examination (*2.8.23*). The powder is yellowish or reddish-brown. Examine under a microscope using *chloral hydrate solution R*. The powder shows the following diagnostic characters (Figure 0025.-1): numerous phloem fibres, in tangential section [D] or in longitudinal section [K], partially lignified, in groups [Da, Ka] with crystal sheaths containing calcium oxalate prisms [Db, Kb], sometimes including medullary rays [Dc]; reddish-brown fragments of cork [H]; fragments of phloem parenchyma, in longitudinal section [G] containing calcium oxalate cluster crystals [A, E] or in tangential section [C] including medullary rays [Ca] and cells containing calcium oxalate cluster crystals [Cb]; a few fragments of collenchyma [F]; isolated calcium oxalate cluster crystals [B] and prisms [J].

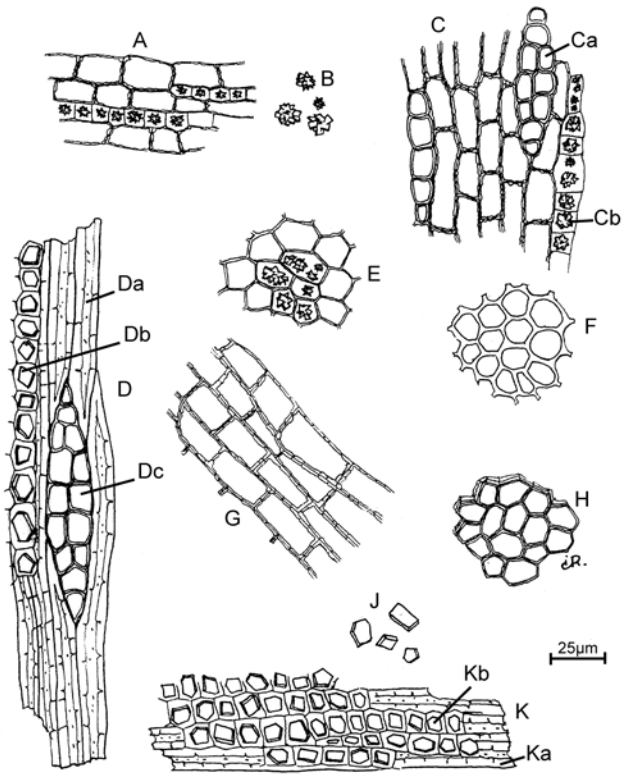

Figure 0025.-1. – *Illustration for identification test B of powdered herbal drug of frangula bark*

C. Examine the chromatogram obtained in test A for other species of *Rhamnus*; anthrones in ultraviolet light at 365 nm.

Results: the chromatogram obtained with the test solution shows 2 orange-brown zones (glucofrangulins) in the lower third and 2-4 red zones (frangulins, not always clearly separated, and above them frangula-emodin) in the upper third.

D. To about 50 mg of the powdered herbal drug (180) (*2.9.12*) add 25 mL of *dilute hydrochloric acid R* and heat the mixture on a water-bath for 15 min. Allow to cool, shake with 20 mL of *ether R* and discard the aqueous layer. Shake the ether layer with 10 mL of *dilute ammonia R1*. The aqueous layer becomes reddish-violet.

TESTS

Other species of *Rhamnus*; anthrones. Thin-layer chromatography (*2.2.27*).

Test solution. To 0.5 g of the powdered herbal drug (180) (*2.9.12*) add 5 mL of *ethanol (70 per cent V/V) R* and heat to boiling. Cool and centrifuge. Decant the supernatant immediately and use within 30 min.

Reference solution. Dissolve 20 mg of *barbaloin R* in *ethanol (70 per cent V/V) R* and dilute to 10 mL with the same solvent.

Plates: *TLC silica gel plate R* (2 plates).

Mobile phase: *water R*, *methanol R*, *ethyl acetate R* (13:17:100 *V/V/V*).

A. *Application*: 10 µL as bands.

Development: over a path of 10 cm.

Drying: in air for 5 min.

Detection: spray with a 50 g/L solution of *potassium hydroxide R* in *ethanol (50 per cent V/V) R*, and heat at 100-105 °C for 15 min; examine in ultraviolet light at 365 nm.

Results: the chromatogram obtained with the reference solution shows a brownish-yellow zone due to barbaloin in the central part; the chromatogram obtained with the test solution shows no zones of intense yellow fluorescence and no zone of orange or reddish fluorescence similar in position to the zone due to barbaloin in the chromatogram obtained with the reference solution.

B. *Application*: 10 µL of the test solution as a band.

Development: over a path of 10 cm.

Drying: in air for maximum 5 min.

Detection: spray immediately with a 5 g/L solution of *nitrotetrazolium blue R* in *methanol R*; examine immediately.

Results: no violet or greyish-blue zones appear.

Foreign matter (*2.8.2*): maximum 1 per cent.

Loss on drying (*2.2.32*): maximum 10.0 per cent, determined on 1.000 g of the powdered herbal drug (355) (*2.9.12*) by drying in an oven at 105 °C for 2 h.

Total ash (*2.4.16*): maximum 6.0 per cent.

ASSAY

Carry out the assay protected from bright light.

In a tared, round-bottomed flask with a ground-glass neck, weigh 0.250 g of the powdered herbal drug (180) (*2.9.12*). Add 25.0 mL of a 70 per cent *V/V* solution of *methanol R*; mix and weigh. Heat in a water-bath under a reflux condenser for 15 min. Allow to cool, weigh and adjust to the original mass with a 70 per cent *V/V* solution of *methanol R*. Filter and transfer 5.0 mL of the filtrate to a separating funnel. Add 50 mL of *water R* and 0.1 mL of *hydrochloric acid R*. Shake with 5 quantities, each of 20 mL, of *light petroleum R*. Allow the layers to separate and transfer the aqueous layer to a 100 mL volumetric flask. Combine the light petroleum layers and wash with 2 quantities, each of 15 mL, of *water R*. Use this water for washing the separating funnel and add it to the aqueous solution in the volumetric flask. Add 5 mL of a 50 g/L solution of *sodium carbonate R* and dilute to 100.0 mL with *water R*. Discard the light petroleum layer. Transfer 40.0 mL of the aqueous solution to a 200 mL round-bottomed flask with a ground-glass neck. Add 20 mL of a 200 g/L solution of *ferric chloride R* and heat under a reflux condenser for 20 min in a water-bath with the water level above that of the liquid in the flask. Add 2 mL of *hydrochloric acid R* and continue heating for 20 min, shaking frequently, until the precipitate is dissolved. Allow to cool, transfer the mixture to a separating funnel and shake with 3 quantities, each of 25 mL, of *ether R*, previously used to rinse the flask. Combine the ether extracts and wash with 2 quantities, each of 15 mL, of *water R*. Transfer the ether layer to a volumetric flask and dilute to 100.0 mL with *ether R*. Evaporate 20.0 mL carefully to dryness and dissolve the residue in 10.0 mL of a 5 g/L solution of *magnesium acetate R* in *methanol R*. Measure the absorbance (*2.2.25*) at 515 nm using *methanol R* as the compensation liquid.

Calculate the percentage content of glucofrangulins, expressed as glucofrangulin A, using the following expression:

$$\frac{A \times 3.06}{m}$$

i.e. taking the specific absorbance of glucofrangulin A to be 204.

A = absorbance at 515 nm;

m = mass of the substance to be examined, in grams.

07/2009:1214

FRANGULA BARK DRY EXTRACT, STANDARDISED

Frangulae corticis extractum siccum normatum

DEFINITION

Standardised dry extract obtained from *Frangula bark (0025)*.

Content: 15.0 per cent to 30.0 per cent of glucofrangulins, expressed as glucofrangulin A ($C_{27}H_{30}O_{14}$; M_r 578.5) (dried extract); the measured content does not deviate from that stated on the label by more than ± 10 per cent.

PRODUCTION

The extract is produced from the herbal drug by a suitable procedure using ethanol (50-90 per cent *V/V*).

CHARACTERS

Appearance: yellowish-brown, fine powder.

IDENTIFICATION

A. Thin-layer chromatography (*2.2.27*).

Test solution. To 0.05 g of the extract to be examined add 5 mL of *ethanol (70 per cent V/V) R* and heat to boiling. Cool and centrifuge. Decant the supernatant immediately and use within 30 min.

Reference solution. Dissolve 20 mg of *barbaloin R* in *ethanol (70 per cent V/V) R* and dilute to 10 mL with the same solvent.

Plate: *TLC silica gel plate R*.

Mobile phase: *water R*, *methanol R*, *ethyl acetate R* (13:17:100 *V/V/V*).

Application: 10 µL as bands.

Development: over a path of 10 cm.

Drying: in air for 5 min.

Detection: spray with a 50 g/L solution of *potassium hydroxide R* in *ethanol (50 per cent V/V) R* and heat at 100-105 °C for 15 min; examine immediately after heating.

Results: the chromatogram obtained with the reference solution shows in the middle third a reddish-brown zone due to barbaloin. The chromatogram obtained with the test solution shows 2 orange-brown zones (glucofrangulins) in the lower third and 2-4 red zones (frangulins, not always clearly separated, and above them frangula-emodin) in the upper third.

B. To about 25 mg add 25 mL of *dilute hydrochloric acid R* and heat the mixture on a water-bath for 15 min. Allow to cool, shake with 20 mL of *ether R* and discard the aqueous layer. Shake the ether layer with 10 mL of *dilute ammonia R1*. The aqueous layer becomes reddish-violet.

TESTS

Loss on drying (*2.8.17*): maximum 5.0 per cent.

Microbial contamination

TAMC: acceptance criterion 10^4 CFU/g (*2.6.12*).

TYMC: acceptance criterion 10^2 CFU/g (*2.6.12*).

Absence of *Escherichia coli* (*2.6.13*).

Absence of *Salmonella* (*2.6.13*).

ASSAY

Carry out the assay protected from bright light.

Into a tared round-bottomed flask with a ground-glass neck, weigh 0.100 g. Add 25.0 mL of a 70 per cent *V/V* solution of *methanol R*, mix and weigh again. Heat the flask in a water-bath under a reflux condenser at 70 °C for 15 min. Allow to cool, weigh and adjust to the original mass with a 70 per cent *V/V* solution of *methanol R*. Filter and transfer 5.0 mL of the filtrate to a separating funnel. Add 50 mL of *water R* and 0.1 mL of *hydrochloric acid R*. Shake with 5 quantities, each of 20 mL, of *light petroleum R1*. Allow the layers to separate and transfer the aqueous layer to a 100 mL volumetric flask. Combine the light petroleum layers and wash with 2 quantities, each of 15 mL, of *water R*. Use this water for washing the separating funnel and add it to the aqueous solution in the volumetric flask. Add 5 mL of a 50 g/L solution of *sodium carbonate R* and dilute to 100.0 mL with *water R*. Discard the light petroleum layer. Transfer 40.0 mL of the aqueous solution to a 200 mL round-bottomed flask with a ground-glass neck. Add 20 mL of a 200 g/L solution of *ferric chloride R* and heat under a reflux condenser for 20 min in a water-bath with the water level above that of the liquid in the flask. Add 2 mL of *hydrochloric acid R* and continue heating for 20 min, shaking frequently, until the precipitate is dissolved. Allow to cool, transfer the mixture to a separating funnel and shake with 3 quantities, each of 25 mL, of *ether R*, previously used to rinse the flask. Combine the ether extracts and wash with 2 quantities, each of 15 mL, of *water R*. Transfer the ether layer to a volumetric flask and dilute to 100.0 mL with *ether R*. Evaporate 20.0 mL carefully to dryness and dissolve the residue in 10.0 mL of a 5 g/L solution of *magnesium acetate R* in *methanol R*. Measure the absorbance (*2.2.25*) at 515 nm using *methanol R* as the compensation liquid.

Calculate the percentage content of glucofrangulins, expressed as glucofrangulin A, using the following expression:

$$\frac{A \times 3.06}{m}$$

i.e. taking the specific absorbance of glucofrangulin A to be 204, calculated on the basis of the specific absorbance of barbaloin.

A = absorbance at 515 nm;

m = mass of the preparation to be examined, in grams.

LABELLING

The label states the content of glucofrangulins.

01/2014:2452

FRAXINUS RHYNCHOPHYLLA BARK

Fraxini rhynchophyllae cortex

DEFINITION

Whole or fragmented, dried branch or trunk bark of *Fraxinus rhynchophylla* Hance, collected in spring or autumn.

Content: minimum 1.0 per cent for the sum of esculin ($C_{15}H_{16}O_9$; M_r 340.3) and esculetin ($C_9H_6O_4$; M_r 178.1) (dried drug).

IDENTIFICATION

A. The branch bark occurs as flexible, curved or channelled, rolled or folded pieces up to 60 cm long and 3 mm thick; the outer surface is whitish-grey to dark brownish-grey, sometimes in patches, and is smooth or slightly rough, dotted with whitish-grey, rounded lenticels; the inner surface is smooth, soft to the touch, yellowish-white or brown. The fracture is fibrous.

The trunk bark occurs as compact, rigid, slat-shaped pieces, up to 6 mm thick; the outer surface is brownish-grey, with fine longitudinal furrows and many reddish-brown lenticels, rounded or slightly split transversally; the inner surface is smooth, orange-brown. The fracture is fibrous.

B. Microscopic examination (*2.8.23*). The powder is brownish. Examine under a microscope using *chloral hydrate solution R*. The powder shows the following diagnostic characters: large sclereids up to 300 µm in diameter, single or in groups, with a very narrow lumen; fragments of brownish cork; ovoid parenchymatous cells.

Herbal drugs

C. To 0.1 g of the powdered herbal drug (355) (*2.9.12*), add 10 mL of *water R* previously heated to 60 °C. Allow to stand for 2 min and filter. Examined in ultraviolet light at 365 nm, the solution shows an intense blue fluorescence that fades considerably after the addition of 2 mL of *hydrochloric acid R*.

D. Thin-layer chromatography (*2.2.27*).

Test solution. To 0.25 g of the powdered herbal drug (355) (*2.9.12*) add 5 mL of *methanol R*. Heat in a water-bath at 60 °C for 1 min. Centrifuge and use the supernatant; filter, if necessary.

Reference solution. Dissolve 1 mg of *esculin R* and 1 mg of *esculetin R* in 2 mL of *methanol R*.

Plate: *TLC silica gel F_{254} plate R* (5-40 µm) [or *TLC silica gel F_{254} plate R* (2-10 µm)].

Mobile phase: *anhydrous formic acid R*, *water R*, *ethyl acetate R* (10:10:80 *V/V/V*).

Application: 10 µL as bands of 15 mm [or 8 mm].

Development: over a path of 10 cm [or 6 cm].

Drying: in air.

Detection: treat with a solution containing 10 g/L of *diphenylboric acid aminoethyl ester R* and 50 g/L of *macrogol 400 R* in *methanol R*. Examine in ultraviolet light at 365 nm.

Results: see below the sequence of zones present in the chromatograms obtained with the reference solution and the test solution. Furthermore, other fluorescent zones may be present in the chromatogram obtained with the test solution.

Top of the plate	
Esculetin: a greenish-yellow fluorescent zone	A greenish-yellow fluorescent zone (esculetin)
	A green fluorescent zone may be present
	A blue fluorescent zone may be present
Esculin: an intense blue fluorescent zone	An intense blue fluorescent zone (esculin)
	A whitish-blue fluorescent zone
Reference solution	**Test solution**

TESTS

Loss on drying (*2.2.32*): maximum 12.0 per cent, determined on 1.000 g of the powdered herbal drug (355) (*2.9.12*) by drying in an oven at 105 °C.

Total ash (*2.4.16*): maximum 5.0 per cent.

Ash insoluble in hydrochloric acid (*2.8.1*): maximum 2.0 per cent.

ASSAY

Liquid chromatography (*2.2.29*).

Test solution. To 0.500 g of the powdered herbal drug (355) (*2.9.12*), add 50.0 mL of *methanol R* and weigh. Heat on a water-bath under a reflux condenser for 1 h. Cool and weigh again. Compensate for the loss of solvent with *methanol R* and mix. Filter through a membrane filter (nominal pore size 0.45 µm).

Reference solution (a). Dissolve 10.0 mg of *esculin CRS* in *methanol R* and dilute to 50.0 mL with the same solvent.

Reference solution (b). Dissolve 10.0 mg of *esculetin CRS* in *methanol R* and dilute to 50.0 mL with the same solvent.

Reference solution (c). Mix 5.0 mL of reference solution (a) with 3.0 mL of reference solution (b) and dilute to 10.0 mL with *methanol R*.

Column:
- *size*: *l* = 0.15 m, Ø = 4.0 mm;
- *stationary phase*: *end-capped octadecylsilyl silica gel for chromatography R* (5 µm).

Mobile phase: *acetonitrile R*, 0.1 per cent *V/V* solution of *phosphoric acid R* (12:88 *V/V*).

Flow rate: 0.75 mL/min.

Detection: spectrophotometer at 334 nm.

Injection: 10 µL.

Run time: 1.5 times the retention time of esculetin.

Retention time: esculin = about 4.5 min; esculetin = about 8.5 min.

Identification of peaks: use the chromatogram obtained with reference solution (a) to identify the peak due to esculin and the chromatogram obtained with reference solution (b) to identify the peak due to esculetin.

System suitability: reference solution (c):
- *resolution*: minimum 5.0 between the peaks due to esculin and esculetin.

Calculate the percentage content of the sum of esculetin and esculin using the following expression:

$$\frac{A_1 \times m_2 \times p_1 \times 0.5}{A_2 \times m_1} + \frac{A_3 \times m_3 \times p_2 \times 0.3}{A_4 \times m_1}$$

A_1 = area of the peak due to esculin in the chromatogram obtained with the test solution;

A_2 = area of the peak due to esculin in the chromatogram obtained with reference solution (c);

A_3 = area of the peak due to esculetin in the chromatogram obtained with the test solution;

A_4 = area of the peak due to esculetin in the chromatogram obtained with reference solution (c);

m_1 = mass of the herbal drug to be examined used to prepare the test solution, in grams;

m_2 = mass of *esculin CRS* used to prepare reference solution (a), in grams;

m_3 = mass of *esculetin CRS* used to prepare reference solution (b), in grams;

p_1 = percentage content of esculin in *esculin CRS*;

p_2 = percentage content of esculetin in *esculetin CRS*.

07/2008:2394
corrected 6.4

FRESH BILBERRY FRUIT DRY EXTRACT, REFINED AND STANDARDISED

Myrtilli fructus recentis extractum siccum raffinatum et normatum

DEFINITION

Refined and standardised dry extract produced from *Bilberry fruit, fresh (1602)*.

Content: 32.4 per cent to 39.6 per cent of anthocyanins, expressed as cyanidin 3-*O*-glucoside chloride [chrysanthemin ($C_{21}H_{21}ClO_{11}$; M_r 484.8)] (dried extract).

PRODUCTION

The extract is produced from the herbal drug by a suitable procedure using ethanol (96 per cent *V/V*) or methanol (minimum 60 per cent *V/V*). Refinement may be performed by ion-exchange chromatography.

Herbal drugs

CHARACTERS

Appearance: dark reddish-violet, amorphous, hygroscopic powder.

IDENTIFICATION

First identification: B.

Second identification: A.

A. Thin-layer chromatography (*2.2.27*).

Test solution. Dissolve 0.10 g of the extract to be examined in 25 mL of *methanol R*. Stir for 15 min and filter.

Reference solution. Dissolve 2 mg of *chrysanthemin R* and 2 mg of *myrtillin R* in 5 mL of *methanol R*.

Plate: TLC plate coated with *cellulose for chromatography R* (5-40 µm) [or TLC plate coated with *cellulose for chromatography R* (2-10 µm)].

Mobile phase:

- *mobile phase A*: *hydrochloric acid R*, *acetic acid R*, *water R* (3:15:82 *V/V/V*);
- *mobile phase B*: *water R*, *acetic acid R* (40:60 *V/V*).

Application: 10 µL [or 2 µL] as bands of 10 mm [or 6 mm].

Development A: over a path of 10 cm [or 6 cm] with mobile phase A.

Drying A: in warm air.

Development B: over a path of 10 cm [or 6 cm] with mobile phase B.

Drying B: in air.

Detection: examine in daylight.

Results: see below the sequence of zones present in the chromatograms obtained with the reference solution and the test solution. Furthermore, other faint zones may be present in the chromatogram obtained with the test solution.

Top of the plate	
———	———
	A violet-red zone
Chrysanthemin: a violet-red zone	A violet-red zone (chrysanthemin)
Myrtillin: a violet-red zone	A violet-red zone (myrtillin)
———	———
Reference solution	**Test solution**

B. Liquid chromatography (*2.2.29*) as described in the test for total anthocyanidins.

The characteristic anthocyanin peaks (peaks 1-8, 10-15 and 17) in the chromatogram obtained with the test solution are similar in their retention times to those in the chromatogram obtained with reference solution (b).

TESTS

Loss on drying (*2.8.17*): maximum 4.5 per cent.

Total ash (*2.4.16*): maximum 2.0 per cent.

Total anthocyanidins. Liquid chromatography (*2.2.29*). *Maintain the solutions at 4 °C.*

Solvent mixture: *hydrochloric acid R*, *methanol R* (2:98 *V/V*).

Test solution. Dissolve 0.1250 g of the extract to be examined in the solvent mixture and dilute to 25.0 mL with the solvent mixture. Dilute 5.0 mL of this solution to 20.0 mL with *dilute phosphoric acid R*.

Reference solution (a). Dissolve 10.0 mg of *cyanidin chloride CRS* in the solvent mixture and dilute to 25.0 mL with the solvent mixture. Dilute 2.0 mL of this solution to 100.0 mL with *dilute phosphoric acid R*.

Reference solution (b). Dissolve 0.1250 g of *bilberry dry extract CRS* in the solvent mixture and dilute to 25.0 mL with the solvent mixture. Dilute 5.0 mL of this solution to 20.0 mL with *dilute phosphoric acid R*.

Column:

- *size*: *l* = 0.250 m, Ø = 4.6 mm;
- *stationary phase*: *octadecylsilyl silica gel for chromatography R* (5 µm);
- *temperature*: 30 °C.

Mobile phase:

- *mobile phase A*: *anhydrous formic acid R*, *water R* (8.5:91.5 *V/V*);
- *mobile phase B*: *anhydrous formic acid R*, *acetonitrile R*, *methanol R*, *water R*, (8.5:22.5:22.5:41.5 *V/V/V/V*);

Time (min)	Mobile phase A (per cent *V/V*)	Mobile phase B (per cent *V/V*)
0 - 35	93 → 75	7 → 25
35 - 45	75 → 35	25 → 65
45 - 46	35 → 0	65 → 100
46 - 50	0	100

Flow rate: 1.0 mL/min.

Detection: spectrophotometer at 535 nm.

Injection: 10 µL.

Identification of peaks: use the chromatogram supplied with *bilberry dry extract CRS* and the chromatograms obtained with reference solutions (a) and (b) to identify the peaks due to the anthocyanins and the anthocyanidins.

Retention times: the retention times and the elution order of the peaks are similar to those shown in the chromatogram (Figure 2394.-1).

System suitability: reference solution (b):

- *peak-to-valley ratio*: minimum 2.0, where H_p = height above the baseline of the peak due to cyanidin 3-*O*-galactoside (peak 3) and H_v = height above the baseline of the lowest point of the curve separating this peak from the peak due to delphinidin 3-*O*-arabinoside (peak 4).

Calculate the percentage content of total anthocyanidins, expressed as cyanidin chloride, using the following expression:

$$\frac{A_1 \times m_2 \times 100 \times p}{m_1 \times A_2 \times 1250}$$

A_1 = sum of the areas of the peaks due to the anthocyanidins (peaks 9, 16, 18-20) in the chromatogram obtained with the test solution;

A_2 = area of the peak due to cyanidin chloride (peak 16) in the chromatogram obtained with reference solution (a);

m_1 = mass of the extract to be examined used to prepare the test solution, in grams;

m_2 = mass of *cyanidin chloride CRS* used to prepare reference solution (a), in grams;

p = percentage content of cyanidin chloride in *cyanidin chloride CRS*.

Limits: not more than 1.0 per cent of total anthocyanidins, expressed as cyanidin chloride.

Herbal drugs

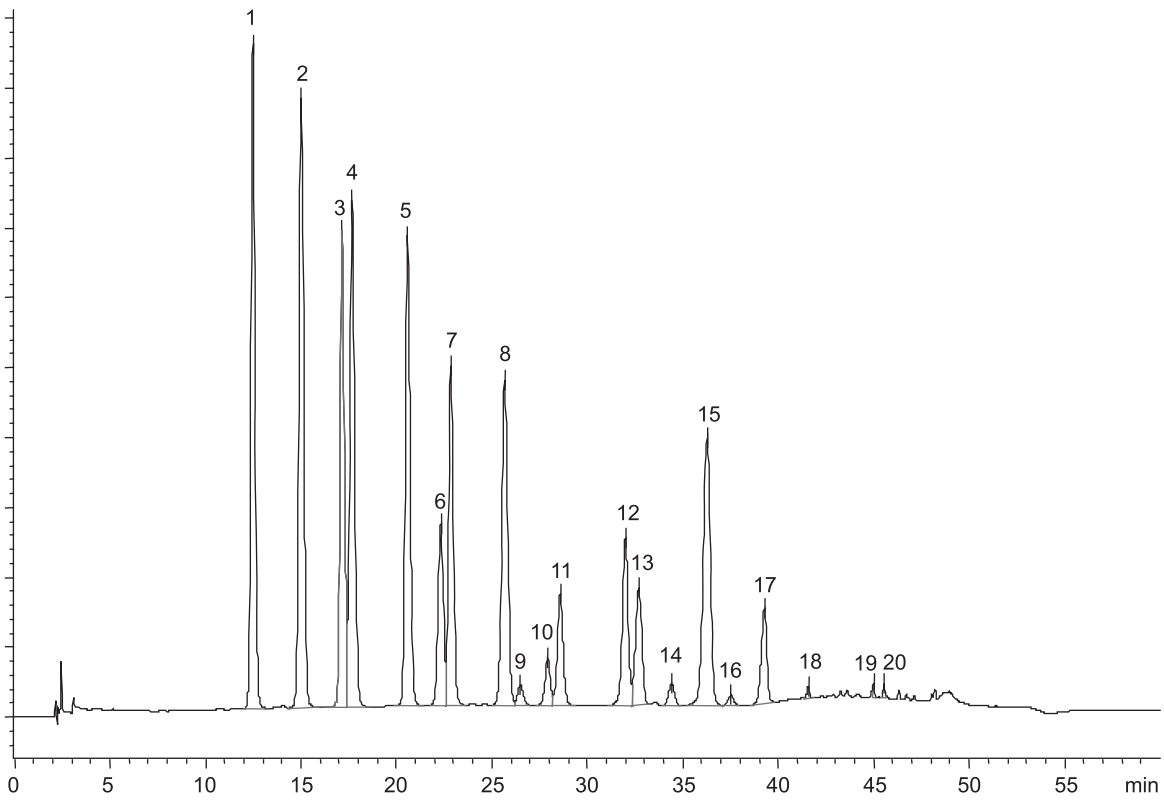

1. delphinidin 3-*O*-galactoside chloride
2. myrtillin (delphinidin 3-*O*-glucoside chloride)
3. cyanidin 3-*O*-galactoside chloride
4. delphinidin 3-*O*-arabinoside chloride
5. chrysanthemin (cyanidin 3-*O*-glucoside chloride)
6. petunidin 3-*O*-galactoside chloride
7. cyanidin 3-*O*-arabinoside chloride
8. petunidin 3-*O*-glucoside chloride
9. delphinidin chloride
10. peonidin 3-*O*-galactoside chloride
11. petunidin 3-*O*-arabinoside chloride
12. peonidin 3-*O*-glucoside chloride
13. malvidin 3-*O*-galactoside chloride
14. peonidin 3-*O*-arabinoside chloride
15. malvidin 3-*O*-glucoside chloride
16. cyanidin chloride
17. malvidin 3-*O*-arabinoside chloride
18. petunidin chloride
19. peonidin chloride
20. malvidin chloride

Figure 2394.-1. – *Chromatogram for the assay of refined and standardised fresh bilberry fruit dry extract*

ASSAY

Liquid chromatography (*2.2.29*) as described in the test for total anthocyanidins with the following modification.

Injection: test solution and reference solution (b).

Calculate the percentage content of total anthocyanins, expressed as cyanidin 3-*O*-glucoside chloride, using the following expression:

$$\frac{A_1 \times m_2 \times p}{m_1 \times A_2}$$

A_1 = sum of the areas of the peaks due to the anthocyanins (peaks 1-8, 10-15 and 17) in the chromatogram obtained with the test solution;

A_2 = area of the peak due to cyanidin 3-*O*-glucoside chloride (peak 5) in the chromatogram obtained with reference solution (b);

m_1 = mass of the extract to be examined used to prepare the test solution, in grams;

m_2 = mass of *bilberry dry extract CRS* used to prepare reference solution (b), in grams;

p = percentage content of cyanidin 3-*O*-glucoside chloride in *bilberry dry extract CRS*.

01/2013:1869

FUMITORY

Fumariae herba

DEFINITION

Whole or fragmented, dried aerial parts of *Fumaria officinalis* L. harvested in full bloom.

Content: minimum 0.40 per cent of total alkaloids, expressed as protopine ($C_{20}H_{19}NO_5$; M_r 353.4) (dried drug).

IDENTIFICATION

A. The hollow, angular stem is light green or greenish-brown. The leaves are alternate, bipinnatisect with 2 or 3 leaf segments, the ultimate lobes lanceolate or obovate; they are greenish-blue and glabrous on both surfaces. The flowers are small and occur in loose racemes; each has a short pedicel and is subtended by a leafy bract; they are pink or purplish-red, dark purple or brown at the apex; the calyx is short, composed of 2 petalloid sepals and the corolla is tubular with 4 petals, the upper petal slightly spurred; there are 6 stamens united by their filaments into 2 groups

Herbal drugs

of 3. The greenish-brown, indehiscent fruits are globular or keel-shaped, truncated or slightly emarginate at the apex, and each contains a small brown seed.

B. Microscopic examination (*2.8.23*). The powder is green. Examine under a microscope using *chloral hydrate solution R*. The powder shows the following diagnostic characters (Figure 1869.-1): fragments of the leaf lamina in surface view with the upper epidermis [D] composed of irregularly polygonal cells [Da], some of which contain microcrystals of calcium oxalate [Db], and underlying palisade parenchyma [Dc]; marginal cells at the apex of the lamina elongated to form blunt papillae [Dd], and with the lower epidermis [A] composed of cells having wavier walls [Aa] and underlying spongy parenchyma [Ac]; anomocytic stomata (*2.8.3*) [Ab, De] on both surfaces; groups [G] of lignified fibres [Ga] and spiral [Gb], reticulate or bordered-pitted [B] vessels from the stem; fragments of the epidermis of the petals [F] composed of polygonal cells with sinuous or wavy anticlinal walls and no papillae; spherical pollen grains [E], about 30 µm in diameter, with a pitted exine and 6 large pores; fragments of the fruit with polygonal cells with a thick, warty cuticle, from the epicarp [H], and sinuous sclereids with thick and channelled walls, from the endocarp [C].

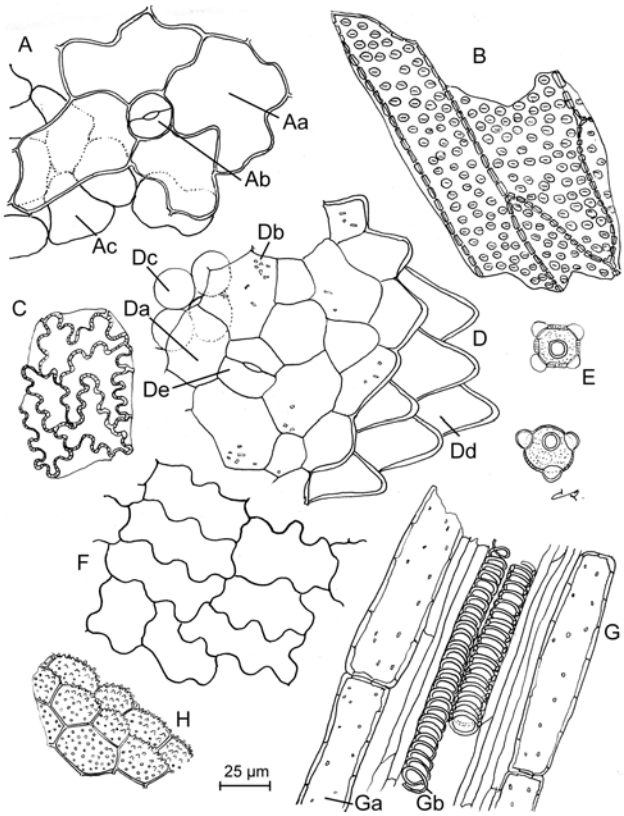

Figure 1869.-1. – *Illustration for identification test B of powdered herbal drug of fumitory*

C. Thin-layer chromatography (*2.2.27*).

Test solution. To 2 g of the powdered herbal drug (355) (*2.9.12*) add 15 mL of *0.05 M sulfuric acid* and stir for 15 min. Filter. Dilute the filtrate to 20 mL with *0.05 M sulfuric acid*. Add 1 mL of *concentrated ammonia R* and 10 mL of *ethyl acetate R*. Stir and centrifuge. Collect the upper organic layer. Repeat the extraction in the same manner. Collect the organic layers and dry over *anhydrous sodium sulfate R*. Evaporate to dryness under reduced pressure. Take up the residue with 0.5 mL of *methanol R*.

Reference solution. Dissolve 5 mg of *protopine hydrochloride R* and 5 mg of *quinine R* in 10 mL of *methanol R*.

Plate: *TLC silica gel plate R*.

Mobile phase: *concentrated ammonia R*, *ethanol (96 per cent) R*, *acetone R*, *toluene R* (2:6:40:52 *V/V/V/V*).

Application: 30 µL as bands.

Development: over a path of 15 cm.

Drying: in air.

Detection A: examine in ultraviolet light at 365 nm.

Results A: see below the sequence of zones present in the chromatogram obtained with the reference solution and the test solution. Furthermore, other blue fluorescent zones are present in the chromatogram obtained with the test solution.

Top of the plate	
Quinine: a blue fluorescent zone	4 blue fluorescent zones A greenish-blue fluorescent zone
Reference solution	**Test solution**

Detection B: treat with a mixture of *potassium iodobismuthate solution R2*, *acetic acid R* and *water R* (1:2:10 *V/V/V*) until orange zones appear against a yellow background.

Results B: see below the sequence of zones present in the chromatograms obtained with the reference solution and the test solution. Furthermore, other less intense orange zones are present in the chromatogram obtained with the test solution.

Top of the plate	
Protopine: an orange zone Quinine: an orange zone	An orange zone (protopine) 2 orange zones A faint orange zone
Reference solution	**Test solution**

TESTS

Cadmium (*2.4.27*): maximum 1.5 ppm.

Loss on drying (*2.2.32*): maximum 12.0 per cent, determined on 1.000 g of the powdered herbal drug (355) (*2.9.12*) by drying in an oven at 105 °C.

Total ash (*2.4.16*): maximum 15.0 per cent.

ASSAY

To 5.000 g of the powdered herbal drug (355) (*2.9.12*) add 5 mL of *dilute ammonia R1* and 50 mL of *ethyl acetate R*. Shake for 15 min. Filter. Repeat the procedure in the same manner and combine the filtrates. Evaporate the filtrates to dryness under reduced pressure. Dissolve the residue by sonication for 10 min in 50 mL of *0.05 M sulfuric acid*. Filter. Dilute the filtrate to 100 mL with *0.05 M sulfuric acid*. Adjust to pH 9-10 with *concentrated ammonia R* and then add 50 mL of *ethyl acetate R*. Shake gently. Collect the upper organic layer, after centrifugation if necessary. Repeat the procedure in the same manner. Combine the organic layers and dry over *anhydrous sodium sulfate R*. Evaporate to dryness under reduced pressure. Take up the residue with 100 mL of *anhydrous acetic acid R*. Titrate with *0.02 M perchloric acid*, determining the end-point potentiometrically (*2.2.20*).

1 mL of *0.02 M perchloric acid* is equivalent to 7.068 mg of protopine.

Calculate the percentage content of total alkaloids, expressed as protopine, using the following expression:

$$\frac{n \times 706.8}{m}$$

n = volume of *0.02 M perchloric acid* used, in millilitres;

m = mass of the herbal drug to be examined, in milligrams.

01/2008:1216
corrected 6.0

GARLIC POWDER

Allii sativi bulbi pulvis

DEFINITION

Bulbs of *Allium sativum* L., cut, freeze-dried or dried at a temperature not exceeding 65 °C and powdered.

Content: minimum 0.45 per cent of allicin ($C_6H_{10}OS_2$; M_r 162.3) (dried drug).

CHARACTERS

Appearance: light yellowish powder.

IDENTIFICATION

A. Examine under a microscope using *chloral hydrate solution R*. The powder shows the following diagnostic characters: numerous fragments of parenchyma and groups of spiral or annular vessels accompanied by thin-walled parenchyma.

B. Thin-layer chromatography (*2.2.27*).

Test solution. To 1.0 g of garlic powder add 5.0 mL of *methanol R*, shake for 60 s and filter.

Reference solution. Dissolve 5 mg of *alanine R* in 10 mL of *water R* and dilute to 20 mL with *methanol R*.

Plate: *TLC silica gel plate R*.

Mobile phase: *glacial acetic acid R*, *propanol R*, *water R*, *anhydrous ethanol R* (20:20:20:40 *V/V/V/V*).

Application: 20 µL of the test solution and 10 µL of the reference solution, as bands.

Development: over a path of 10 cm.

Drying: in air.

Detection: spray with a 2 g/L solution of *ninhydrin R* in a mixture of 5 volumes of *glacial acetic acid R* and 95 volumes of *butanol R* and heat at 105-110 °C for 5-10 min; examine in daylight.

Results: the chromatogram obtained with the reference solution shows a violet zone (alanine) in its central third. The chromatogram obtained with the test solution shows a violet or brownish-red zone similar in position to that in the chromatogram obtained with the reference solution and corresponding to alliin; above and below this zone are other, generally fainter, violet zones.

TESTS

Starch. Examine the powdered herbal drug under a microscope using *water R*. Add *iodine solution R1*. No blue colour develops.

Loss on drying (*2.2.32*): maximum 7.0 per cent, determined on 1.000 g of the powdered herbal drug by drying in an oven at 105 °C.

Total ash (*2.4.16*): maximum 5.0 per cent.

ASSAY

Liquid chromatography (*2.2.29*). *Carry out the assay as quickly as possible.*

Internal standard solution. Dissolve 20.0 mg of *butyl parahydroxybenzoate CRS* in 100.0 mL of a mixture of equal volumes of *methanol R* and *water R*.

Test solution. To 0.800 g of garlic powder add 20.0 mL of *water R* and homogenise the mixture in an ultrasonic bath at 4 °C for 5 min. Allow to stand at room temperature for 30 min. Then centrifuge for 30 min. Dilute 10.0 mL of the supernatant to 25.0 mL with a mixture of 40 volumes of a 1 per cent *V/V* solution of *anhydrous formic acid R* and 60 volumes of *methanol R* (stock solution). Shake and centrifuge for 5 min. Place 0.50 mL of the internal standard solution in a volumetric flask and dilute to 10.0 mL with the stock solution.

Precolumn:

- *size*: l = 20 mm, Ø = 4 mm,
- *stationary phase*: silanised *octadecylsilyl silica gel for chromatography R* (5 µm).

Column:

- *size*: l = 0.25 m, Ø = 4 mm,
- *stationary phase*: silanised *octadecylsilyl silica gel for chromatography R* (5 µm).

Mobile phase: mix 40 volumes of a 1 per cent *V/V* solution of *anhydrous formic acid R* and 60 volumes of *methanol R*.

Flow rate: 0.8 mL/min.

Detection: spectrophotometer at 254 nm.

Injection: loop injector, 1 µL of the internal standard solution and 10 µL of the test solution.

Calculate the percentage of allicin using the following expression:

$$\frac{S_1 \times m_2 \times 22.75}{S_2 \times m_1}$$

S_1 = area of the peak due to allicin (principal peak) in the chromatogram obtained with the test solution,

S_2 = area of the peak due to butyl parahydroxybenzoate in the chromatogram obtained with the test solution,

m_1 = mass of the herbal drug to be examined, in grams,

m_2 = mass of butyl parahydroxybenzoate in 100.0 mL of the internal standard solution, in grams. 1 mg of butylparahydroxybenzoate corresponds to 8.65 mg of allicin.

01/2008:0392

GENTIAN ROOT

Gentianae radix

DEFINITION

Dried, fragmented underground organs of *Gentiana lutea* L.

CHARACTERS

Characteristic odour.

Strong and persistent bitter taste.

Gentian root occurs as single or branched subcylindrical pieces of various lengths and usually 10-40 mm thick but occasionally up to 80 mm thick at the crown.

IDENTIFICATION

A. The surface is brownish-grey, and the colour of a transverse section is yellowish or reddish-yellow, but not reddish-brown. The root is longitudinally wrinkled and bears occasional rootlet scars. The branches of the rhizome frequently bear a terminal bud and are always encircled by closely arranged leaf scars. The rhizome and root are brittle when dry and break with a short fracture but they absorb moisture readily to become flexible. The smoothed, transversely cut surface shows a bark,

Herbal drugs

occupying about one-third of the radius, separated by the well-marked cambium from an indistinctly radiate and mainly parenchymatous xylem.

B. Reduce to a powder (355) (*2.9.12*). The powder is light brown or yellowish-brown. Examine under a microscope using *chloral hydrate solution R*. The powder shows the following diagnostic characters: fragments of the subero-phellodermic layer, consisting of thin-walled yellowish-brown cork cells and thick-walled collenchyma (phelloderm); fragments of cortical and ligneous parenchymatous cells with moderately thickened walls containing droplets of oil and small prisms and minute needles of calcium oxalate; fragments of lignified vessels with spiral or reticulate thickening.

C. Thin-layer chromatography (*2.2.27*).

Test solution. To 1.0 g of the powdered herbal drug (355) (*2.9.12*) add 25 mL of *methanol R*, shake for 15 min and filter. Evaporate the filtrate to dryness under reduced pressure, at a temperature not exceeding 50 °C. Take up the residue with small quantities of *methanol R* so as to obtain 5 mL of a solution, which may contain a sediment.

Reference solution. Dissolve 5 mg of *hyperoside R* and 5 mg of *phenazone R* in 10 mL of *methanol R*.

Plate: *TLC silica gel F_{254} plate R*.

Mobile phase: *water R*, *anhydrous formic acid R*, *ethyl formate R* (4:8:88 *V/V/V*).

Application: 20 µL as bands.

Development: in an unsaturated tank, over a path of 8 cm.

Drying: in air.

Detection A: examine in ultraviolet light at 254 nm.

Results A: see below the sequence of the zones present in the chromatograms obtained with the reference solution and the test solution. Furthermore, other zones may be present in the chromatogram obtained with the test solution.

Top of the plate	
	A prominent quenching zone
Phenazone: a quenching zone	
	A weak quenching zone (amarogentin)
_____	_____
_____	_____
Hyperoside: a quenching zone	A prominent quenching zone (gentiopicroside)
Reference solution	**Test solution**

Detection B: spray with a 100 g/L solution of *potassium hydroxide R* in *methanol R* and then with a freshly prepared 2 g/L solution of *fast blue B salt R* in a mixture of 50 volumes of *anhydrous ethanol R* and 50 volumes of *water R*. Examine in daylight.

Results B: see below the sequence of the zones present in the chromatograms obtained with the reference solution and the test solution. Furthermore, other zones may be present in the chromatogram obtained with the test solution.

Top of the plate	
	A prominent dark violet zone
	A violet-red zone (amarogentin)
_____	_____
_____	_____
Hyperoside: a brownish-red zone	A weak light brown zone (gentiopicroside)
Reference solution	**Test solution**

TESTS

Other species of *Gentiana*. Examine the chromatograms obtained in identification test C, detection B.

Results: the chromatogram obtained with the test solution does not show violet zones immediately above the zone due to amarogentin.

Total ash (*2.4.16*): maximum 6.0 per cent.

Bitterness value (*2.8.15*): minimum 10 000.

Water-soluble extractive: minimum 33 per cent.

To 5.0 g of the powdered herbal drug (710) (*2.9.12*) add 200 mL of boiling *water R*. Allow to stand for 10 min, shaking occasionally. Allow to cool, dilute to 200.0 mL with *water R* and filter. Evaporate 20.0 mL of the filtrate to dryness on a water-bath. Dry the residue in an oven at 100-105 °C. The residue weighs a minimum of 0.165 g.

01/2008:1870

GENTIAN TINCTURE

Gentianae tinctura

DEFINITION

Tincture produced from *Gentian root (0392)*.

PRODUCTION

The tincture is produced from 1 part of the comminuted drug and 5 parts of ethanol (70 per cent *V/V*) by a suitable procedure.

CHARACTERS

Appearance: yellowish-brown or reddish-brown liquid.

It has a strong bitter taste.

IDENTIFICATION

Thin-layer chromatography (*2.2.27*).

Test solution. The tincture to be examined.

Reference solution. Dissolve 5 mg of *phenazone R* and 5 mg of *hyperoside R* in 10 mL of *methanol R*.

Plate: *TLC silica gel F_{254} plate R*.

Mobile phase: *water R*, *anhydrous formic acid R*, *ethyl formate R* (4:8:88 *V/V/V*).

Application: 20 µL, as bands.

Development: over a path of 8 cm, in an unsaturated tank.

Drying: in air.

Detection A: examine in ultraviolet light at 254 nm.

Results A: see below the sequence of the zones present in the chromatograms obtained with the reference solution and the test solution. Furthermore, other zones may be present in the chromatogram obtained with the test solution.

Top of the plate	
	A prominent quenching zone
Phenazone: a quenching zone	
	A weak quenching zone (amarogentin)
_____	_____
_____	_____
Hyperoside: a quenching zone	A prominent quenching zone (gentiopicroside)
Reference solution	**Test solution**

Detection B: spray with a 10 per cent *V/V* solution of *potassium hydroxide R* in *methanol R* and then with a freshly prepared 2 g/L solution of *fast blue B salt R* in a mixture of *ethanol R* and *water R* (50:50 *V/V*). Examine in daylight.

Herbal drugs

Results B: see below the sequence of the zones present in the chromatograms obtained with the reference solution and the test solution. Furthermore, other zones may be present in the chromatogram obtained with the test solution.

Top of the plate	
	A prominent dark violet zone
	A violet-red zone (amarogentin)
———	———
———	———
Hyperoside: a brownish-red zone	A weak light brown zone (gentiopicroside)
Reference solution	**Test solution**

TESTS

Ethanol content (*2.9.10*): 62 per cent *V/V* to 67 per cent *V/V*.

Bitterness value (*2.8.15*): minimum 1000.

Dry residue (*2.8.16*): minimum 5.0 per cent *m/m*, determined on 3.00 g.

01/2011:1522

GINGER

Zingiberis rhizoma

DEFINITION

Dried, whole or cut rhizome of *Zingiber officinale* Roscoe, with the cork removed, either completely or from the wide, flat surfaces only.

Content: minimum 15 mL/kg of essential oil (anhydrous drug).

CHARACTERS

Characteristic aromatic odour.

Spicy and burning taste.

IDENTIFICATION

A. The rhizome is laterally compressed, bearing short, flattened, obovate oblique branches on the upper side, each sometimes having a depressed scar at the apex; the whole rhizomes are about 5-10 cm long, 1.5-3 cm or 4 cm wide and 1-1.5 cm thick, sometimes split longitudinally. The scraped rhizome with a light-brown external surface shows longitudinal striations and occasional loose fibres; the outer surface of the unscraped rhizome varies from pale to dark brown and is more or less covered with cork that shows conspicuous, narrow, longitudinal and transverse ridges; the cork readily exfoliates from the lateral surfaces but persists between the branches. The fracture is short and starchy with projecting fibres. The smoothed transversely cut surface exhibits a narrow cortex separated by an endodermis from a much wider stele; it shows numerous, scattered, fibrovascular bundles and abundant scattered oleoresin cells with yellow contents. The unscraped rhizome shows, in addition, an outer layer of dark brown cork.

B. Reduce to a powder (355) (*2.9.12*). The powder is pale yellow or brownish. Examine under a microscope using *chloral hydrate solution R*. The powder shows the following diagnostic characters (Figure 1522.-1): groups of large, thin-walled, septate fibres, with one wall frequently dentate [C, D, G]; fragments [K] containing vessels with reticulate thickening [Ka] often accompanied by narrow, thin-walled cells containing brown pigment [Kb] and amyliferous parenchyma [Kc]; abundant reticulate vessels, fairly large, isolated [H, L]; abundant thin-walled parenchyma of the ground tissue [J, M], some cells containing brown oleoresin [Ja]; fragments of brown cork, usually seen in surface view [F] but sometimes in transverse section [E]. Examine under a microscope using a 50 per cent *V/V* solution of *glycerol R*. The powder shows abundant starch granules, simple, flattened, oblong or oval or irregular, up to about 50 µm long and 25 µm wide, with a small point hilum situated at the narrower end; sometimes, granules show faint, transverse striations, and may be free [A], agglomerated [B] or included in parenchymatous cells (Kc).

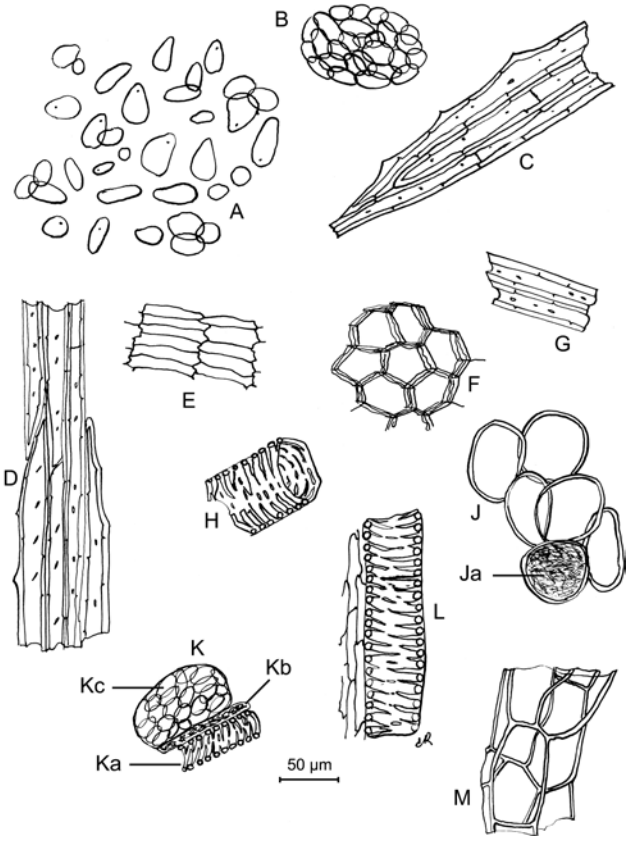

Figure 1522.-1. – *Illustration for identification test B of powdered herbal drug of ginger*

C. Thin-layer chromatography (*2.2.27*).

Test solution. To 1.0 g of the powdered herbal drug (710) (*2.9.12*) add 5 mL of *methanol R*. Shake for 15 min and filter.

Reference solution. Dissolve 10 µL of *citral R* and 10 mg of *resorcinol R* in 10 mL of *methanol R*. Prepare the solution immediately before use.

Plate: *TLC silica gel plate R*.

Mobile phase: *hexane R*, *ether R* (40:60 *V/V*).

Application: 20 µL as bands.

Development: in an unsaturated tank, over a path of 15 cm.

Drying: in air.

Detection: spray with a 10 g/L solution of *vanillin R* in *sulfuric acid R* and examine in daylight while heating at 100-105 °C for 10 min.

Results: the chromatogram obtained with the reference solution shows in the lower half an intense red zone (resorcinol) and in the upper half 2 violet zones (citral); the chromatogram obtained with the test solution shows below the zone due to resorcinol in the chromatogram obtained with the reference solution 2 intense violet zones (gingerols) and in the middle, between the zones due to resorcinol and citral in the chromatogram obtained with the reference solution, 2 other less intense violet zones (shogaols); other zones may be present.

Herbal drugs

TESTS

Water (*2.2.13*): maximum 100 mL/kg, determined by distillation on 20.0 g of the powdered herbal drug (710) (*2.9.12*).

Total ash (*2.4.16*): maximum 6.0 per cent.

ASSAY

Essential oil (*2.8.12*). Use 20.0 g of the freshly, coarsely powdered herbal drug, a 1000 mL round-bottomed flask, 10 drops of *liquid paraffin R* or other antifoam, 500 mL of *water R* as distillation liquid and 0.5 mL of *xylene R* in the graduated tube. Distil at a rate of 2-3 mL/min for 4 h.

04/2008:1827

GINKGO DRY EXTRACT, REFINED AND QUANTIFIED

Ginkgonis extractum siccum raffinatum et quantificatum

DEFINITION

Refined and quantified dry extract produced from *Ginkgo leaf (1828)*.

Content:

- *flavonoids, expressed as flavone glycosides* (M_r 756.7): 22.0 per cent to 27.0 per cent (dried extract);
- *bilobalide*: 2.6 per cent to 3.2 per cent (dried extract);
- *ginkgolides A, B and C*: 2.8 per cent to 3.4 per cent (dried extract);
- *ginkgolic acids*: maximum 5 ppm (dried extract).

PRODUCTION

The extract is produced from the herbal drug by an appropriate procedure using organic solvents and their mixtures with water, physical separation steps as well as other suitable processes.

CHARACTERS

Appearance: bright yellow-brown, powder or friable mass.

IDENTIFICATION

Thin-layer chromatography (*2.2.27*).

Test solution. Dissolve 20.0 mg of the extract to be examined in 10 mL of a mixture of 2 volumes of *water R* and 8 volumes of *methanol R*.

Reference solution. Dissolve 1.0 mg of *chlorogenic acid R* and 3.0 mg of *rutin R* in 20 mL of *methanol R*.

Plate: *TLC silica gel plate R* (5-40 µm) or [*TLC silica gel plate R* (2-10 µm)].

Mobile phase: *anhydrous formic acid R*, *glacial acetic acid R*, *water R*, *ethyl acetate R* (7.5:7.5:17.5:67.5 *V/V/V/V*).

Application: 20 µL [or 5 µL], as bands.

Development: over a path of 17 cm [or 6 cm].

Drying: at 100-105 °C.

Detection: spray the plate whilst still hot with a 10 g/L solution of *diphenylboric acid aminoethyl ester R* in *methanol R*, then spray with a 50 g/L solution of *macrogol 400 R* in *methanol R*; allow to dry in air for about 30 min and examine in ultraviolet light at 365 nm.

Results: see below the sequence of zones present in the chromatograms obtained with the reference solution and the test solution. Furthermore, other, weaker fluorescent zones may be present in the chromatogram obtained with the test solution.

Top of the plate	
	A blue fluorescent zone
	Several faint coloured zones
———	———
	A brown fluorescent zone
	A green fluorescent zone
	An intense light blue fluorescent zone sometimes overlapped by a greenish-brown fluorescent zone
Chlorogenic acid: a light blue fluorescent zone	
	One or two green fluorescent zones
Rutin: a yellowish-brown fluorescent zone	One or two yellowish-brown fluorescent zones
———	———
	Several green and yellowish-brown fluorescent zones
Reference solution	**Test solution**

ASSAY

Flavonoids. Liquid chromatography (*2.2.29*).

Test solution. Dissolve 0.200 g of the extract to be examined in 20 mL of *methanol R*. Add 15.0 mL of *dilute hydrochloric acid R* and 5 mL of *water R* and dilute to 50.0 mL with *methanol R*. Transfer 10.0 mL of this solution into a 10 mL brown-glass vial. Close the vial with a tight rubber membrane stopper and secure with an aluminium crimped cap. Heat on a water-bath for 25 min. Allow to cool to 20 °C.

Reference solution. Dissolve 10.0 mg of *quercetin dihydrate CRS* in 20 mL of *methanol R*. Add 15.0 mL of *dilute hydrochloric acid R* and 5 mL of *water R* and dilute to 50.0 mL with *methanol R*.

Column:

- *size*: *l* = 0.125 m, Ø = 4 mm;
- *stationary phase*: *octadecylsilyl silica gel for chromatography R* (5 µm);
- *temperature*: 25 °C.

Mobile phase:

- *mobile phase A*: 0.3 g/L solution of *phosphoric acid R* adjusted to pH 2.0;
- *mobile phase B*: *methanol R*;

Time (min)	Mobile phase A (per cent *V/V*)	Mobile phase B (per cent *V/V*)
0 - 1	60	40
1 - 20	60 → 45	40 → 55
20 - 21	45 → 0	55 → 100
21 - 25	0	100

Flow rate: 1.0 mL/min.

Detector: spectrophotometer at 370 nm.

Injection: 10 µL.

Relative retention with reference to quercetin (retention time = about 12.5 min): kaempferol = about 1.4; isorhamnetin = about 1.5.

System suitability: test solution:

- *resolution*: minimum 1.5 between the peaks due to kaempferol and isorhamnetin.

Determine the sum of the areas including all the peaks from the peak due to quercetin to the peak due to isorhamnetin in the chromatogram obtained with the test solution (see Figure 1827.-1).

Herbal drugs

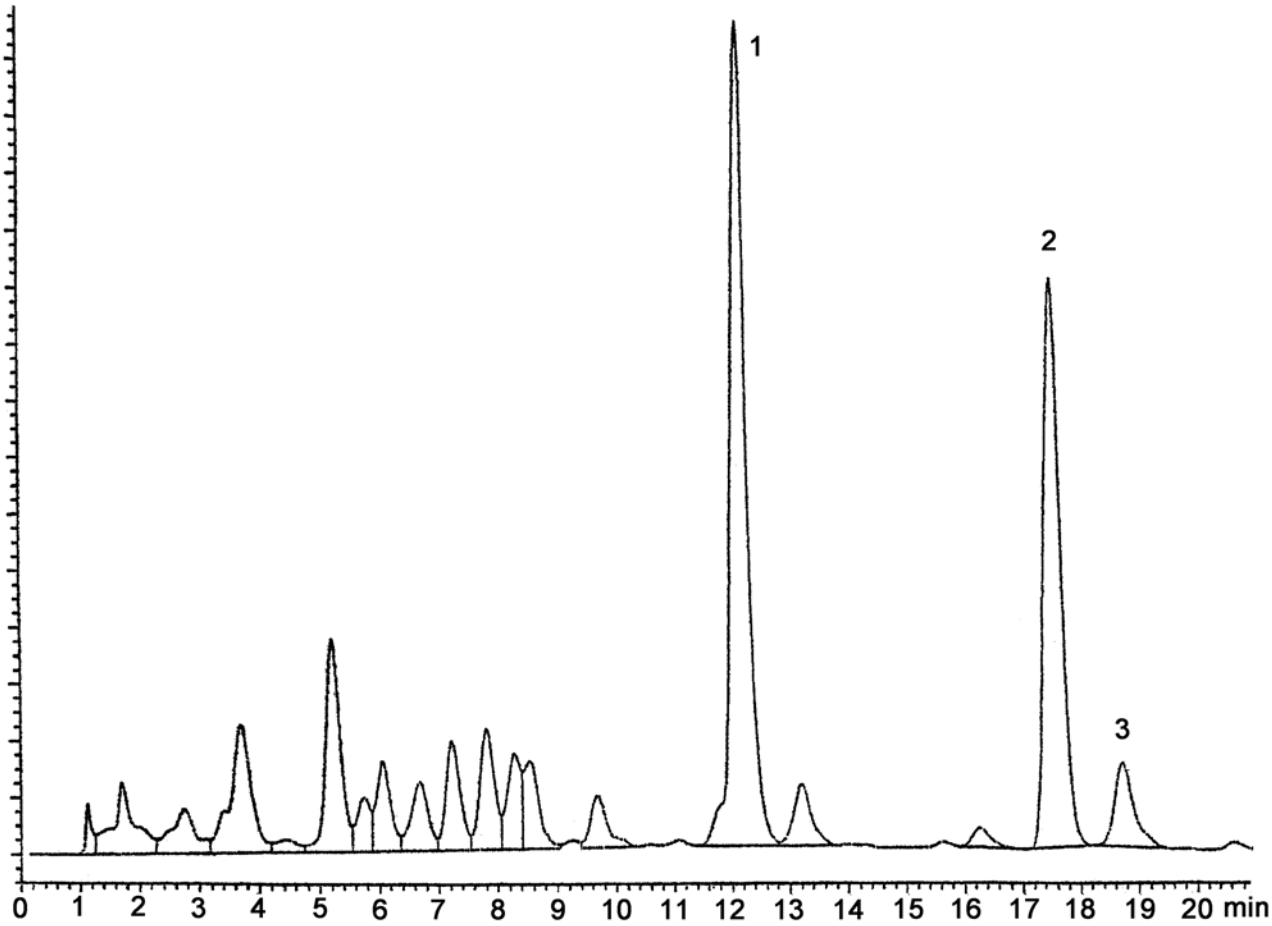

1. quercetin 2. kaempferol 3. isorhamnetin

Figure 1827.-1. – *Chromatogram for the assay of flavonoids in refined and quantified ginkgo dry extract*

Calculate the percentage content of flavonoids, expressed as flavone glycosides, using the following expression:

$$\frac{F_1 \times m_1 \times 2.514 \times p}{F_2 \times m_2}$$

F_1 = sum of the areas of all the peaks from the peak due to quercetin to the peak due to isorhamnetin in the chromatogram obtained with the test solution;

F_2 = area of the peak due to quercetin in the chromatogram obtained with the reference solution;

m_1 = mass of *quercetin dihydrate CRS* in the reference solution, in grams;

m_2 = mass of the extract to be examined used to prepare the test solution, in grams;

p = percentage content of anhydrous quercetin in *quercetin dihydrate CRS*.

Terpene lactones. Liquid chromatography (*2.2.29*).

Test solution. Place 0.120 g of the extract to be examined in a 25 mL beaker and dissolve it in 10 mL of *phosphate buffer solution pH 5.8 R* by stirring. Transfer the solution into a chromatography column, about 0.15 m long and about 30 mm in internal diameter, containing 15 g of *kieselguhr for chromatography R*. Wash the beaker with 2 quantities, each of 5 mL, of *phosphate buffer solution pH 5.8 R* and transfer the washings to the chromatography column. Allow to stand for 15 min. Elute with 100 mL of *ethyl acetate R*. Evaporate the eluate to dryness at a pressure not exceeding 4 kPa in a water-bath at 50 °C. The residue of solvent is eliminated by an air-current. Take up the residue in 2.5 mL of the mobile phase.

Reference solution (a). Dissolve 30.0 mg of *benzyl alcohol CRS* in the mobile phase and dilute to 100.0 mL with the mobile phase.

Reference solution (b). Place 0.120 g of the *ginkgo dry extract for peak identification CRS* in a 25 mL beaker and dissolve it in 10 mL of *phosphate buffer solution pH 5.8 R* by stirring, then proceed as described for the test solution.

Column:

- *size*: *l* = 0.25 m, Ø = 4 mm;
- *stationary phase*: *octylsilyl silica gel for chromatography R* (5 µm);
- *temperature*: 25 °C.

Mobile phase: *tetrahydrofuran R*, *methanol R*, *water R* (10:20:75 *V/V/V*).

Flow rate: 1.0 mL/min.

Detection: refractometer maintained at 35 °C.

Injection: 100 µL.

Identification of peaks: use the chromatogram supplied with *ginkgo dry extract for peak identification CRS* and the chromatogram obtained with the reference solution (b) to identify the peaks due to bilobalide and ginkgolides A, B and C.

System suitability:

- the chromatogram obtained with reference solution (b) is similar to the chromatogram supplied with *ginkgo dry extract for peak identification CRS*.

Calculate the percentage content of bilobalide, using the following expression:

$$\frac{F_1 \times m_1 \times p \times 0.025 \times 1.20}{F_5 \times m_2}$$

Calculate the percentage content of ginkgolide A, using the following expression:

$$\frac{F_2 \times m_1 \times p \times 0.025 \times 1.22}{F_5 \times m_2}$$

Calculate the percentage content of ginkgolide B, using the following expression:

$$\frac{F_3 \times m_1 \times p \times 0.025 \times 1.19}{F_5 \times m_2}$$

Calculate the percentage content of ginkgolide C, using the following expression:

$$\frac{F_4 \times m_1 \times p \times 0.025 \times 1.27}{F_5 \times m_2}$$

F_1 = area of the peak due to bilobalide in the chromatogram obtained with the test solution;

F_2 = area of the peak due to ginkgolide A in the chromatogram obtained with the test solution;

F_3 = area of the peak due to ginkgolide B in the chromatogram obtained with the test solution;

F_4 = area of the peak due to ginkgolide C in the chromatogram obtained with the test solution;

F_5 = area of the peak due to benzyl alcohol in the chromatogram obtained with reference solution (a);

m_1 = mass of *benzyl alcohol CRS* in reference solution (a), in grams;

m_2 = mass of the extract to be examined used to prepare the test solution, in grams;

p = percentage content of benzyl alcohol in *benzyl alcohol CRS*.

Calculate the percentage content of the sum of ginkgolides A, B and C, using the following expression:

$$G_A + G_B + G_C$$

G_A = percentage content of ginkgolide A;

G_B = percentage content of ginkgolide B;

G_C = percentage content of ginkgolide C.

Ginkgolic acids. Liquid chromatography (*2.2.29*).

Test solution. Dissolve 0.500 g of the powdered extract to be examined in 8 mL of *methanol R*, sonicating if necessary, and dilute to 10.0 mL with the same solvent. Centrifuge if necessary.

Reference solution. Dissolve 10.0 mg of *ginkgolic acids CRS* in 8 mL of *methanol R*, sonicating if necessary, and dilute to 10.0 mL with the same solvent. Dilute 2.0 mL of this solution to 10.0 mL with *methanol R*.

Column:

- *size*: *l* = 0.25 m, Ø = 4.6 mm;
- *stationary phase*: *octylsilyl silica gel for chromatography R* (5 µm);
- *temperature*: 35 °C.

Mobile phase:

- *mobile phase A*: dilute 0.1 mL of *trifluoroacetic acid R* to 1000 mL with *water R*;
- *mobile phase B*: dilute 0.1 mL of *trifluoroacetic acid R* to 1000 mL with *acetonitrile R*;

Time (min)	Mobile phase A (per cent *V/V*)	Mobile phase B (per cent *V/V*)
0 - 30	25 → 10	75 → 90
30 - 35	10	90
35 - 36	10 → 25	90 → 75
36 - 45	25	75

Flow rate: 1.0 mL/min.

Detection: spectrophotometer at 210 nm.

Injection: 50 µL.

Identification of components: use the chromatogram supplied with *ginkgolic acids CRS* and the chromatogram obtained with the test solution to identify the peaks due to ginkgolic acids C13, C15 and C17.

System suitability: reference solution:

- *resolution*: minimum 2.0 between the peaks due to ginkgolic acids C13 and C15;
- *symmetry factor*: 0.8 to 2.0 for the peaks due to ginkgolic acids C13, C15 and C17.

Calculate the content in parts per million of ginkgolic acids expressed as ginkgolic acid C17, using the following expression:

$$\frac{A_1 \times m_2 \times p \times 2000}{A_2 \times m_1}$$

A_1 = sum of the areas of the peaks due to the ginkgolic acids C13, C15 and C17 in the chromatogram obtained with the test solution;

A_2 = area of the peak due to ginkgolic acid C17 in the chromatogram obtained with the reference solution;

m_1 = mass of the extract to be examined used to prepare the test solution, in grams;

m_2 = mass of *ginkgolic acids CRS* used to prepare the reference solution, in grams;

p = percentage content of ginkgolic acid C17 in *ginkgolic acids CRS*.

01/2011:1828

GINKGO LEAF

Ginkgonis folium

DEFINITION

Whole or fragmented, dried leaf of *Ginkgo biloba* L.

Content: not less than 0.5 per cent of flavonoids, expressed as flavone glycosides (M_r 757) (dried drug).

IDENTIFICATION

A. The leaf is greyish or yellowish-green or yellowish-brown. The upper surface is slightly darker than the lower surface. The petioles are about 4-9 cm long. The lamina is about 4-10 cm wide, fan-shaped, usually bilobate or sometimes undivided. Both surfaces are smooth, and the venation dichotomous, the veins appearing to radiate from the base; they are equally prominent on both surfaces. The distal margin is incised, irregularly and to different degrees, and irregularly lobate or emarginate. The lateral margins are entire and taper towards the base.

B. Reduce to a powder (355) (*2.9.12*). The powder is greyish or yellowish-green or yellowish-brown. Examine under a microscope using *chloral hydrate solution R*. The powder shows the following diagnostic characters (Figure 1828.-1): irregularly-shaped fragments of the lamina[A, B, D, E], with the upper epidermis, in surface view [D] and transverse section [E], consisting of elongated cells with irregularly

Herbal drugs

sinuous walls [Da], often accompanied by palisade parenchyma [Db], and the lower epidermis, in surface view [A] and transverse section [B], consisting of small cells, with a finely striated cuticle and each cell shortly papillose [Aa], and stomata [Ab] about 60 µm, wide, deeply sunken with 6-8 subsidiary cells; fragments of vascular tissue from the petiole and veins [C] with xylem [Ca] and parenchyma, some cells containing abundant cluster crystals of calcium oxalate of various sizes [Cb].

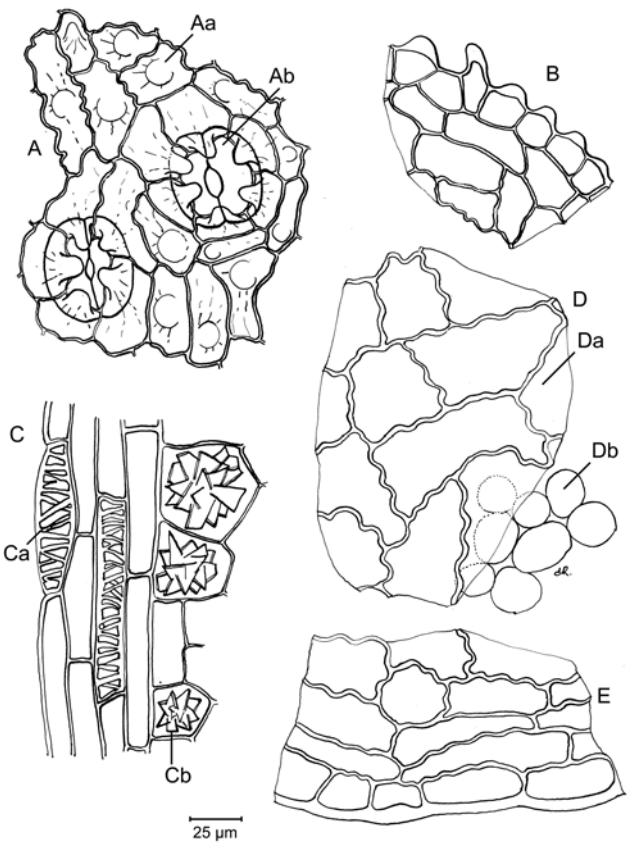

Figure 1828.-1. – *Illustration for identification test B of powdered herbal drug of ginkgo leaf*

C. Thin-layer chromatography (*2.2.27*).

Test solution. To 2.0 g of the powdered herbal drug (710) (*2.9.12*) add 10 mL of *methanol R*. Heat in a water-bath at 65 °C for 10 min. Shake frequently. Allow to cool to room temperature and filter.

Reference solution. Dissolve 1.0 mg of *chlorogenic acid R* and 3.0 mg of *rutin R* in 20 mL of *methanol R*.

Plate: *TLC silica gel plate R*.

Mobile phase: *anhydrous formic acid R*, *glacial acetic acid R*, *water R*, *ethyl acetate R* (7.5:7.5:17.5:67.5 *V/V/V/V*).

Application: 20 µL as bands.

Development: over a path of 17 cm.

Drying: at 100-105 °C.

Detection: spray the warm plate with a 10 g/L solution of *diphenylboric acid aminoethyl ester R* in *methanol R*, then with the same volume of a 50 g/L solution of *macrogol 400 R* in *methanol R*; allow to dry in air for about 30 min and examine in ultraviolet light at 365 nm.

Results: see below the sequence of zones present in the chromatograms obtained with the reference solution and the test solution. Furthermore, other weak fluorescent zones may be present in the chromatogram obtained with the test solution.

Top of the plate	
	A yellowish-brown fluorescent zone A green fluorescent zone 2 yellowish-brown fluorescent zones An intense light blue fluorescent zone sometimes overlapped by a greenish-brown fluorescent zone
Chlorogenic acid: a light blue fluorescent zone	
	A green fluorescent zone
Rutin: a yellowish-brown fluorescent zone	2 yellowish-brown fluorescent zones A green fluorescent zone A yellowish-brown fluorescent zone
Reference solution	**Test solution**

TESTS

Foreign matter (*2.8.2*): maximum 5 per cent of stems and 2 per cent of other foreign matter.

Loss on drying (*2.2.32*): maximum 11.0 per cent, determined on 1.000 g of the powdered herbal drug (355) (*2.9.12*) by drying in an oven at 105 °C for 2 h.

Total ash (*2.4.16*): maximum 11.0 per cent.

ASSAY

Flavonoids. Liquid chromatography (*2.2.29*).

Test solution. Heat 2.500 g of the powdered herbal drug (710) (*2.9.12*) in 50 mL of a 60 per cent *V/V* solution of *acetone R* under a reflux condenser for 30 min. Filter and collect the filtrate. Extract the drug residue a 2nd time in the same manner, using 40 mL of a 60 per cent *V/V* solution of *acetone R* and filter. Collect the filtrates and dilute to 100.0 mL with a 60 per cent *V/V* solution of *acetone R*. Evaporate 50.0 mL of the solution to eliminate the acetone and transfer to a 50.0 mL vial, rinsing with 30 mL of *methanol R*. Add 4.4 mL of *hydrochloric acid R1*, dilute to 50.0 mL with *water R* and centrifuge. Place 10 mL of the supernatant in a 10 mL brown-glass vial. Close with a rubber seal and an aluminium cap and heat on a water-bath for 25 min. Allow to cool to room temperature.

Reference solution. Dissolve 10.0 mg of *quercetin dihydrate R* in 20 mL of *methanol R*. Add 15.0 mL of *dilute hydrochloric acid R* and 5 mL of *water R* and dilute to 50.0 mL with *methanol R*.

Column:

- *size*: *l* = 0.125 m, Ø = 4 mm;
- *stationary phase*: *octadecylsilyl silica gel for chromatography R* (5 µm);
- *temperature*: 25 °C.

Mobile phase:

- *mobile phase A*: 0.3 g/L solution of *phosphoric acid R* adjusted to pH 2.0;
- *mobile phase B*: *methanol R*;

Time (min)	Mobile phase A (per cent *V/V*)	Mobile phase B (per cent *V/V*)
0 - 1	60	40
1 - 20	60 → 45	40 → 55
20 - 21	45 → 0	55 → 100
21 - 25	0	100

Flow rate: 1.0 mL/min.

Detection: spectrophotometer at 370 nm.

Injection: 10 µL.

Relative retention with reference to quercetin (retention time = about 12.5 min): kaempferol = about 1.4; isorhamnetin = about 1.5.

System suitability:

– *resolution*: minimum 1.5 between the peaks due to kaempferol and isorhamnetin.

Do not take into account peaks eluting before the quercetin peak or after the isorhamnetin peak in the chromatogram obtained with the test solution.

Calculate the percentage content of flavonoids, expressed as flavone glycosides, using the following expression:

$$2 \times \frac{F_1 \times m_1 \times 2.514 \times p}{F_2 \times m_2}$$

F_1 = sum of the areas of all the considered peaks in the chromatogram obtained with the test solution;

F_2 = area of the peak due to quercetin in the chromatogram obtained with the reference solution;

m_1 = mass of quercetin used to prepare the reference solution, in grams;

m_2 = mass of the herbal drug to be examined used to prepare the test solution, in grams;

p = percentage content of anhydrous quercetin in *quercetin dihydrate R*.

01/2008:1523
corrected 6.0

GINSENG

Ginseng radix

DEFINITION

Whole or cut dried root, designated white ginseng; treated with steam and then dried, designated red ginseng, of *Panax ginseng* C. A. Meyer.

Content: minimum 0.40 per cent for the sum of ginsenosides Rg1 ($C_{42}H_{72}O_{14}$,$2H_2O$; M_r 837) and Rb1 ($C_{54}H_{92}O_{23}$,$3H_2O$; M_r 1163) (dried drug).

IDENTIFICATION

A. The principal root is fusiform or cylindrical, sometimes branched, up to about 20 cm long and 2.5 cm in diameter, and may be curved or markedly re-curved. The surface is pale yellow to cream in white ginseng, brownish-red in red ginseng and shows longitudinal ridges. Stem scars may be seen at the crown. The fracture is short. The transversely-cut surface shows a wide outer zone with scattered orange-red resin canals and a finely radiate inner region. The rootlets, numerous in the lower part of white ginseng, are normally absent in red ginseng.

B. Reduce to a powder (355) (*2.9.12*). The powder is light yellow. Examine under a microscope using *chloral hydrate solution R*. The powder shows the following diagnostic characters: abundant fragments of thin-walled parenchymatous cells and fragments of large secretory canals containing yellowish-brown resin, non-lignified tracheids and partially-lignified vessels with spiral or reticulate thickening, isolated or in groups; scattered cluster crystals of calcium oxalate. Examine under a microscope using a mixture of equal volumes of *glycerol R* and *water R*. The starch granules are very abundant, simple or 2 or 3 compound, and range from 1-10 µm in diameter. In red ginseng the starch granules are often deformed and destroyed by treating with steam, or may be absent.

C. Thin-layer chromatography (*2.2.27*).

Test solution. Boil 1.0 g of the powdered herbal drug (355) (*2.9.12*) under a reflux condenser with 10 mL of a 70 per cent *V/V* solution of *methanol R* for 15 min. Filter after cooling and dilute to 10.0 mL with *methanol R*.

Reference solution. Dissolve 5.0 mg of *aescin R* and 5.0 mg of *arbutin R* in 1 mL of *methanol R*.

Plate: *TLC silica gel plate R* (5-40 µm) [or *TLC silica gel plate R* (2-10 µm)].

Mobile phase: *ethyl acetate R*, *water R*, *butanol R* (25:50:100 *V/V/V*), allow the mixture to separate for 10 min. Use the upper layer.

Application: 20 µL [or 4 µL] as bands.

Development: over 10 cm [or 5 cm] in an unsaturated tank.

Drying: in air.

Detection: spray with *anisaldehyde solution R* and heat at 105-110 °C for 5-10 min. Examine in daylight.

Results: see below the sequence of the zones present in the chromatograms obtained with the reference solution and the test solution.

Top of the plate	
Arbutin: a brown zone	
	A violet zone (ginsenosides Rg1 + Rg2)
	A faint violet zone (ginsenoside Rf)
	A violet zone (ginsenoside Re)
	A violet zone (ginsenoside Rd)
	A faint violet zone
	A violet zone (ginsenoside Rc)
Aescin: a grey zone	A violet zone (ginsenosides Rb1 + Rb2)
Reference solution	**Test solution**

TESTS

Panax quinquefolium. Examine the chromatograms obtained in the assay. The chromatogram obtained with the test solution shows a peak due to ginsenoside Rf (see Figure 1523.-1). In the case of a substitution by *Panax quinquefolium* no peak due to ginsenoside Rf is present.

Loss on drying (*2.2.32*): maximum 10.0 per cent, determined on 1.000 g of the powdered herbal drug (355) (*2.9.12*) by drying in an oven at 105 °C.

Total ash (*2.4.16*): maximum 7.0 per cent.

Ash insoluble in hydrochloric acid (*2.8.1*): maximum 1.0 per cent.

ASSAY

Liquid chromatography (*2.2.29*).

Test solution. Reduce about 50 g to a powder (355) (*2.9.12*). Place 1.00 g of the powdered herbal drug and 70 mL of a 50 per cent *V/V* solution of *methanol R* in a 250 mL round-bottomed flask. After adding a few grains of pumice, boil on a water-bath under a reflux condenser for 1 h. After cooling, centrifuge and collect the supernatant. Treat the residue as described above. Mix the collected liquids and evaporate to dryness under reduced pressure at a temperature not exceeding 60 °C. Take up the residue with 20.0 mL of a mixture of 20 volumes of *acetonitrile R* and 80 volumes of *water R*. Dilute 2.0 mL of the solution to 10.0 mL with a mixture of 20 volumes of *acetonitrile R* and 80 volumes of *water R*. Filter through a suitable membrane filter (nominal pore size 0.45 µm) before injection.

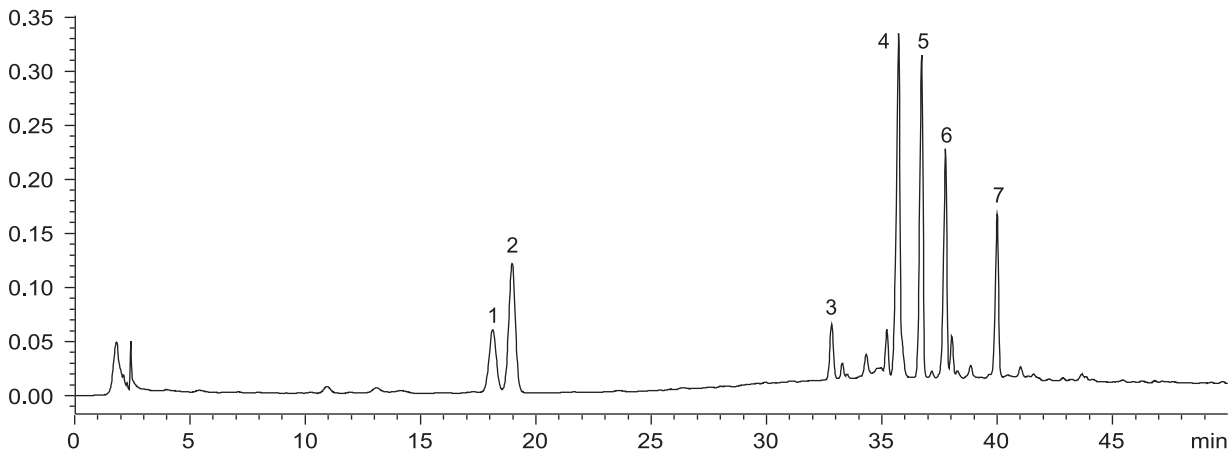

1. ginsenoside Rg1 3. ginsenoside Rf 5. ginsenoside Rc 7. ginsenoside Rd
2. ginsenoside Re 4. ginsenoside Rb1 6. ginsenoside Rb2

Figure 1523.-1. – *Chromatogram for the assay of ginseng: test solution*

Reference solution. Dissolve 3.0 mg of *ginsenoside Rg1 R*, 3.0 mg of *ginsenoside Re R*, 3.0 mg of *ginsenoside Rf R* and 3.0 mg of *ginsenoside Rb1 R* in *methanol R* and dilute to 10.0 mL with the same solvent.

Column:

- *size*: *l* = 0.125 m, Ø = 4.6 mm;
- *stationary phase*: *octadecylsilyl silica gel for chromatography R* (5 µm);
- *temperature*: 35 °C.

Mobile phase:

- *mobile phase A*: *water R* adjusted to pH 2 with *phosphoric acid R*;
- *mobile phase B*: *acetonitrile R*;

Time (min)	Mobile phase A (per cent *V/V*)	Mobile phase B (per cent *V/V*)
0 - 8	80	20
8 - 40	80 → 60	20 → 40
40 - 45	60 → 40	40 → 60
45 - 47	40 → 0	60 → 100
47 - 52	0	100
52 - 55	0 → 80	100 → 20

Flow rate: 1.0 mL/min.

Detection: spectrophotometer at 203 nm.

Equilibration: 20 min.

Injection: 20 µL.

Elution order: order indicated in the composition of the reference solution; record the retention times of these substances.

System suitability: reference solution:

- *resolution*: minimum 1.0 between the peaks due to ginsenoside Rg1 and ginsenoside Re.

Locate the peaks due to ginsenoside Rb1 and ginsenoside Rg1 in the chromatogram obtained with the test solution.

Calculate the percentage content of ginsenosides Rb1 and Rg1 using the following expression:

$$\frac{A_1 \times m_2 \times p_1}{A_3 \times m_1 \times 100} + \frac{A_2 \times m_3 \times p_2}{A_4 \times m_1 \times 100}$$

A_1 = area of the peak due to ginsenoside Rb1 in the chromatogram obtained with the test solution,

A_2 = area of the peak due to ginsenoside Rg1 in the chromatogram obtained with the test solution,

A_3 = area of the peak due to ginsenoside Rb1 in the chromatogram obtained with the reference solution,

A_4 = area of the peak due to ginsenoside Rg1 in the chromatogram obtained with the reference solution,

m_1 = mass of the herbal drug to be examined, in grams,

m_2 = mass of ginsenoside Rb1 in the reference solution, in milligrams,

m_3 = mass of ginsenoside Rg1 in the reference solution, in milligrams,

p_1 = percentage content of ginsenoside Rb1 in the reagent,

p_2 = percentage content of ginsenoside Rg1 in the reagent.

01/2013:2356

GINSENG DRY EXTRACT

Ginseng extractum siccum

DEFINITION

Dry extract produced from *Ginseng (1523)*.

Content: minimum 4.0 per cent of the sum of ginsenosides Rb1, Rb2, Rc, Rd, Re, Rf, Rg1 and Rg2, expressed as ginsenoside Rb1 ($C_{54}H_{92}O_{23}$; M_r 1109) (dried extract).

PRODUCTION

The extract is produced from the herbal drug by a suitable procedure using a hydroalcoholic solvent equivalent in strength to ethanol (35-90 per cent *V/V*).

CHARACTERS

Appearance: light brownish-yellow, hygroscopic powder or brittle mass.

IDENTIFICATION

Thin-layer chromatography (*2.2.27*).

Test solution. Dissolve 0.15 g of the extract to be examined in 10 mL of a 70 per cent *V/V* solution of *methanol R*.

Reference solution. Dissolve 0.15 g of *ginseng dry extract HRS* in 10 mL of a 70 per cent *V/V* solution of *methanol R*.

Herbal drugs

Plate: *TLC silica gel plate R* (5-40 µm) [or *TLC silica gel plate R* (2-10 µm)].

Mobile phase: *ethyl acetate R*, *water R*, *butanol R* (25:50:100 *V/V/V*); allow the phases to separate for 10 min and use the upper layer.

Application: 20 µL [or 4 µL] as bands of 10 mm [or 8 mm].

Development: over a path of 10 cm [or 5 cm] in an unsaturated tank.

Drying: in air.

Detection: treat with *anisaldehyde solution R* and heat at 105-110 °C for 5-10 min; examine in daylight.

Results: see below the sequence of zones present in the chromatograms obtained with the reference solution and the test solution. Furthermore, other faint zones may be present in the chromatograms obtained with the test solution and the reference solution.

Top of the plate	
———	———
A violet zone (ginsenosides Rg1 + Rg2)	A violet zone (ginsenosides Rg1 + Rg2)
A faint violet zone (ginsenoside Rf)	A faint violet zone (ginsenoside Rf)
A violet zone (ginsenoside Re)	A violet zone (ginsenoside Re)
A violet zone (ginsenoside Rd)	A violet zone (ginsenoside Rd)
A faint violet zone	A faint violet zone
A violet zone (ginsenoside Rc)	A violet zone (ginsenoside Rc)
A faint violet zone	A faint violet zone
———	———
A violet zone (ginsenosides Rb1 + Rb2)	A violet zone (ginsenosides Rb1 + Rb2)
Several unresolved violet and greenish zones	Several unresolved violet and greenish zones
Reference solution	**Test solution**

TESTS

Loss on drying (*2.8.17*): maximum 7.0 per cent.

ASSAY

Liquid chromatography (*2.2.29*).

Buffer solution. Dissolve 3.5 g of *disodium hydrogen phosphate dihydrate R* and 7.2 g of *potassium dihydrogen phosphate R* in *water R* and dilute to 1000 mL with the same solvent.

Test solution. Dissolve 0.100 g of the extract to be examined in the buffer solution and dilute to 10.0 mL with the buffer solution. Prepare a ready-to-use sample-preparation cartridge containing 0.50 g of octadecylsilyl silica gel (45 µm), using 5 mL of *methanol R* followed by 20 mL of *water R*. Apply 5.0 mL of the solution to be analysed to the top of the cartridge. Wash the cartridge with 20 mL of *water R* followed by 15 mL of a 30 per cent *V/V* solution of *methanol R*. Discard the eluates after confirming that no ginsenosides are present, otherwise repeat the preparation of the solution with another brand of cartridge where no ginsenosides are eluted with a 30 per cent *V/V* solution of *methanol R*. Elute the cartridge with 20 mL of *methanol R*; collect the eluate. Under reduced pressure, evaporate the eluate to dryness. Dissolve the residue in 2.0 mL of *methanol R*. Filter through a suitable membrane filter (nominal pore size 0.45 µm).

Reference solution (a). Dissolve 0.100 g of *ginseng dry extract HRS* in the buffer solution and dilute to 10.0 mL with the buffer solution. Prepare a ready-to-use sample-preparation cartridge containing 0.50 g of octadecylsilyl silica gel (45 µm), using 5 mL of *methanol R* followed by 20 mL of *water R*. Apply 5.0 mL of the solution to be analysed to the top of the cartridge. Wash the cartridge with 20 mL of *water R* followed by 15 mL of a 30 per cent *V/V* solution of *methanol R*. Discard the eluates after confirming that no ginsenosides are present, otherwise repeat the preparation of the solution with another brand of cartridge where no ginsenosides are eluted with a 30 per cent *V/V* solution of *methanol R*. Elute the cartridge with 20 mL of *methanol R*; collect the eluate. Under reduced pressure, evaporate the eluate to dryness. Dissolve the residue in 2.0 mL of *methanol R*. Filter through a suitable membrane filter (nominal pore size 0.45 µm).

Reference solution (b). Dissolve 3.0 mg of *ginsenoside Rb1 CRS* in *methanol R* and dilute to 5.0 mL with the same solvent.

Reference solution (c). Dissolve 3.0 mg of *ginsenoside Rg2 R* in *methanol R* and dilute to 5.0 mL with the same solvent.

Reference solution (d). Dilute 1.0 mL of reference solution (b) to 2.0 mL with reference solution (c).

Column:

- *size*: *l* = 0.125 m, Ø = 4.6 mm;
- *stationary phase*: *octadecylsilyl silica gel for chromatography R* (5 µm);
- *temperature*: 35 °C.

Mobile phase:

- *mobile phase A*: *water R* adjusted to pH 2 with *phosphoric acid R*;
- *mobile phase B*: *acetonitrile R1*;

Time (min)	Mobile phase A (per cent *V/V*)	Mobile phase B (per cent *V/V*)
0 - 8	80	20
8 - 40	80 → 60	20 → 40
40 - 45	60 → 40	40 → 60
45 - 47	40 → 0	60 → 100

Flow rate: 1.0 mL/min.

Detection: spectrophotometer at 203 nm.

Injection: 20 µL.

Elution order: ginsenoside Rg1, ginsenoside Re, ginsenoside Rf, ginsenoside Rb1, ginsenoside Rg2, ginsenoside Rc, ginsenoside Rb2, ginsenoside Rd; depending on the operating conditions and the state of the column, ginsenoside Rb1 may elute before or after ginsenoside Rg2.

Identification of peaks: use the chromatogram supplied with *ginseng dry extract HRS* and the chromatogram obtained with reference solution (a) to identify the peaks due to ginsenosides Rg1, Re, Rf, Rc, Rb2 and Rd; use the chromatogram obtained with reference solution (b) to identify the peak due to ginsenoside Rb1; use the chromatogram obtained with reference solution (c) to identify the peak due to ginsenoside Rg2.

Relative retention with reference to ginsenoside Rb1 (retention time = about 33 min): ginsenoside Rg1 = about 0.53; ginsenoside Re = about 0.54; ginsenoside Rf = about 0.88; ginsenoside Rg2 = about 0.98; ginsenoside Rc = about 1.04; ginsenoside Rb2 = about 1.08; ginsenoside Rd = about 1.17.

System suitability: reference solution (d):

- *resolution*: minimum 1.5 between the peaks due to ginsenosides Rg2 and Rb1.

Calculate the percentage content of the sum of ginsenosides Rb1, Rb2, Rc, Rd, Re, Rf, Rg1 and Rg2, expressed as ginsenoside Rb1, using the following expression:

$$\frac{A_1 \times m_2 \times p \times 0.8}{A_2 \times m_1}$$

A_1 = sum of the areas of the peaks due to ginsenosides Rb1, Rb2, Rc, Rd, Re, Rf, Rg1 and Rg2 in the chromatogram obtained with the test solution;

A_2 = area of the peak due to ginsenoside Rb1 in the chromatogram obtained with reference solution (b);

m_1 = mass of the extract to be examined used to prepare the test solution, in grams;

m_2 = mass of *ginsenoside Rb1 CRS* used to prepare reference solution (b), in grams;

p = percentage content of ginsenoside Rb1 in *ginsenoside Rb1 CRS*.

01/2008:1892
corrected 6.0

GOLDENROD

Solidaginis herba

DEFINITION

Whole or cut, dried, flowering aerial parts of *Solidago gigantea* Ait or *Solidago canadensis* L., their varieties or hybrids and/or mixtures of these.

Content: minimum 2.5 per cent of flavonoids, expressed as hyperoside ($C_{21}H_{20}O_{12}$; M_r 464.4) (dried drug).

IDENTIFICATION

A. The stems are greenish-yellow or greenish-brown, partly tinted reddish, roundish, more or less conspicuously grooved, glabrous and smooth in the lower part, slightly or densely pubescent in the upper part. They are solid with a whitish pith.

The leaves are green, sessile, lanceolate, with a serrate margin, 8-12 cm long and about 1-3 cm wide, the upper surface is green and more or less glabrous, the lower surface is greyish-green and pubescent, especially on the veins. The inflorescence consists of a number of unilateral, curved racemes which together form a pyramidal panicle at the end of the stems.

Each capitulum has an involucre composed of linear-lanceolate, imbricated yellowish-green bracts, surrounding a single row of yellow ligulate florets about the same length as the involucre; yellow, radially arranged tubular florets, as long as, or longer, than the ligulate florets; a brownish inferior ovary surmounted by a white pappus of silky hairs.

B. Reduce to a powder (355) (*2.9.12*). The powder is greyish-green. Examine under a microscope using *chloral hydrate solution R*. The powder shows pappus bristles and their fragments, consisting of multiseriate trichomes composed of elongated cells with the tips free from the surface and forming pointed projections over the entire length; fragments of the leaf mesophyll with vascular bundles accompanied by secretory cells; fragments of the leaf epidermis with sinuous to wavy-walled cells and stomata of the anomocytic type (*2.8.3*); uniseriate covering trichomes with up to 5 or 6 cells, some whip-like with a thicker-walled terminal cell; fragments of the style with long, slender papillae; fragments of the stem with reticulate and spiral vessels; pollen grains, with 3 germinal pores and a spiny exine; numerous whisk-shaped hairs, a few isolated twin-hairs from the ovary, absence of multicellular trichomes with a terminal cell bent at a right angle.

C. Thin-layer chromatography (*2.2.27*).

Test solution. To 0.75 g of the powdered herbal drug (355) (*2.9.12*) add 5 mL of *methanol R* and boil in a water-bath under a reflux condenser for 10 min. Cool and filter.

Reference solution. Dissolve 1.0 mg of *chlorogenic acid R*, 2.5 mg of *quercitrin R* and 2.5 mg of *rutin R* in 10 mL of *methanol R*.

Plate: *TLC silica gel plate R*.

Mobile phase: *anhydrous formic acid R*, *water R*, *methyl ethyl ketone R*, *ethyl acetate R* (6:6:18:30 *V/V/V/V*).

Application: 20 µL of the test solution and 10 µL of the reference solution as bands.

Development: over a path of 10 cm.

Drying: at 100-105 °C.

Detection: spray with a 10 g/L solution of *diphenylboric acid aminoethyl ester R* in *methanol R* and then with a 50 g/L solution of *macrogol 400 R* in *methanol R*. Allow to stand for 30 min. Examine in ultraviolet light at 365 nm.

Results: see below the sequence of zones present in the chromatograms obtained with the reference solution and the test solution. Furthermore, other zones may be present in the chromatogram obtained with the test solution.

Top of the plate	
	A bluish-green fluorescent zone
Quercitrin: a yellowish-brown fluorescent zone	A faint to intense yellowish-brown fluorescent zone (quercitrin)
	A more or less intense yellowish brown zone
Chlorogenic acid: a light blue fluorescent zone	A light blue zone and/or a yellow fluorescent zone (chlorogenic acid)
Rutin: an orange fluorescent zone	A faint to intense yellowish-brown fluorescent zone (rutin)
Reference solution	**Test solution**

TESTS

Foreign matter (*2.8.2*): maximum 5 per cent of brownish parts and maximum 2 per cent of other foreign matter.

Loss on drying (*2.2.32*): maximum 10 per cent, determined on 0.500 g of the powdered herbal drug (355) (*2.9.12*) by drying in an oven at 105 °C for 2 h.

Total ash (*2.4.16*): maximum 7.0 per cent.

Ash insoluble in hydrochloric acid (*2.8.1*): maximum 1.0 per cent.

ASSAY

Stock solution. In a 100 mL round-bottomed flask, introduce 0.200 g of the powdered herbal drug (250) (*2.9.12*), add 1 mL of a 5 g/L solution of *hexamethylenetetramine R*, 20 mL of *acetone R* and 2 mL of *hydrochloric acid R1*. Boil the mixture under a reflux condenser for 30 min. Filter the liquid through a small plug of absorbent cotton into a 100 mL flask. Add the absorbent cotton to the residue in the round-bottomed flask, extract with 2 quantities, each of 20 mL of *acetone R*, each time boiling under a reflux condenser for 10 min. Allow to cool. Filter the combined acetone extracts through a filter paper into a volumetric flask. Rinse the flask and the filter paper and dilute to 100.0 mL with *acetone R*. Introduce 20.0 mL of the solution into a separating funnel, add 20 mL of *water R* and shake the mixture with 1 quantity of 15 mL and then 3 quantities, each of 10 mL, of *ethyl acetate R*. Combine the ethyl acetate extracts in a separating funnel, wash twice with 50 mL of *water R* and filter the extracts over 10 g of *anhydrous sodium sulfate R* into a volumetric flask. Dilute to 50.0 mL

with *ethyl acetate R*, rinsing the separating funnel and the sodium sulfate.

Test solution. To 10.0 mL of the stock solution add 1.0 mL of *aluminium chloride reagent R* and dilute to 25.0 mL with a 5 per cent *V/V* solution of *glacial acetic acid R* in *methanol R*.

Compensation solution. Dilute 10.0 mL of the stock solution to 25.0 mL with a 5 per cent *V/V* solution of *glacial acetic acid R* in *methanol R*.

Measure the absorbance of the test solution (*2.2.25*) at 425 nm after 30 min by comparison with the compensation solution.

Calculate the percentage content of flavonoids, expressed as hyperoside, from the expression:

$$\frac{A \times 1.25}{m}$$

i.e. taking the value of the specific absorbance of hyperoside to be 500.

A = absorbance measured at 425 nm,

m = mass of the herbal drug to be examined, in grams.

01/2013:1893

GOLDENROD, EUROPEAN

Solidaginis virgaureae herba

DEFINITION

Whole or fragmented, dried, flowering aerial parts of *Solidago virgaurea* L.

Content: minimum 0.5 per cent and maximum 1.5 per cent of flavonoids, expressed as hyperoside ($C_{21}H_{20}O_{12}$; M_r 464.4) (dried drug).

IDENTIFICATION

A. The stem is cylindrical, striated, the lower part often reddish-violet, sometimes entirely glabrous or pubescent with short, bent, apically directed hairs. The basal leaves are obovate or oblanceolate, with a serrate margin, and taper at the base into a long, winged petiole; the cauline leaves are alternate, smaller than the basal leaves and more elliptical in outline, with an entire or slightly toothed margin; they are sessile or with only a short petiole. Both surfaces of the leaves are glabrous or only slightly pubescent with a prominent reticulate venation on the lower surface. The capitula form a tightly packed panicle. At the base of the pedicels there are 2 small, linear bracts with scarious margins. The involucre consists of 2-4 rows of loosely arranged, imbricate bracts, each bract greenish-yellow with a smooth and shiny inner surface, the outer surface hairy or glabrous, with a scarious margin. Each capitulum contains 6-12 widely separated female ray florets, about twice as long as the bracts, and about 10-30 hermaphrodite, tubular florets. All florets are yellow. The brown, inferior ovary tapers towards the base and has a ribbed surface, covered with scattered hairs; it is surmounted by a whitish pappus composed of smooth or rough, bristly hairs.

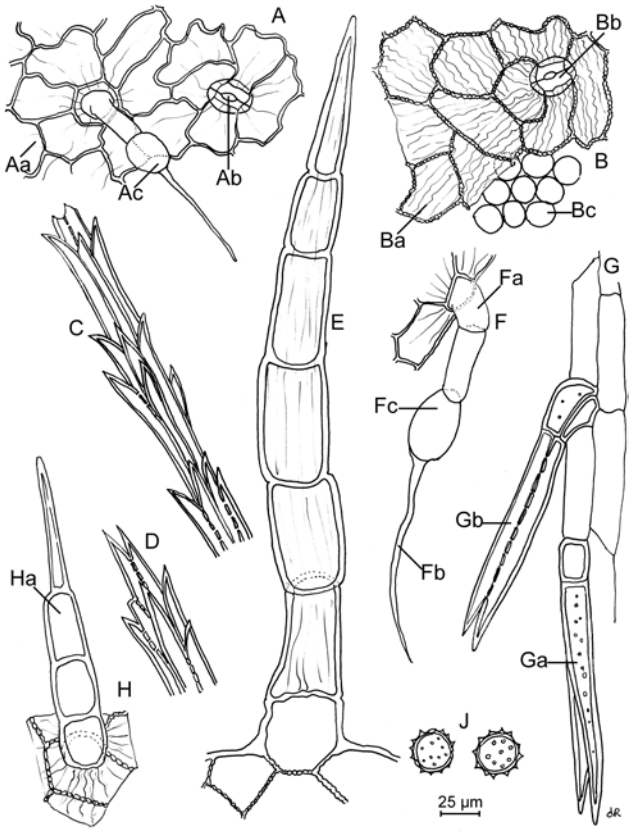

Figure 1893.-1. – *Illustration for identification test B of powdered herbal drug of European goldenrod*

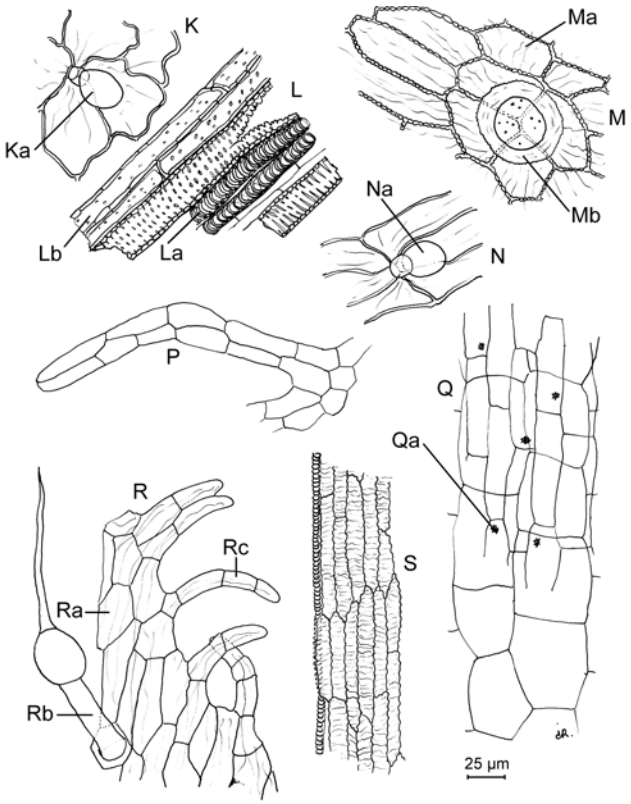

Figure 1893.-2. – *Illustration for identification test B of powdered herbal drug of European goldenrod*

B. Microscopic examination (*2.8.23*). The powder is light green. Examine under a microscope using *chloral hydrate solution R*. The powder shows the following diagnostic characters (Figures 1893.-1 and 1893.-2): fragments of the upper epidermis of the leaf in surface view [B, H, M],

Herbal drugs

covered by a distinctly striated cuticle, composed of polygonal cells with straight, beaded, thickened walls [Ba, Ma], uniseriate, multicellular covering trichomes [Ha] or rounded, thick-walled, covering trichome scars with a pitted lumen [Mb], and a few anomocytic stomata (*2.8.3*) [Bb] sometimes accompanied by underlying palisade parenchyma [Bc]; fragments of the lower epidermis of the leaf in surface view [A, K, N] covered by a slightly striated cuticle composed of cells with sinuous walls in the area of the lamina [Aa] or with more rigid walls near the veins [N], numerous anomocytic stomata (*2.8.3*) [Ab], occasional glandular trichomes with a unicellular stalk and a unicellular head [Ka, Na], covering trichomes some of which are pennant-like [Ac, F], uniseriate, multicellular, with 1-3 thin-walled basal cells [Fa], a flagella-like distal cell [Fb], and an enlarged, more or less rounded cell [Fc] between them, others are uniseriate, multicellular (up to about 10 cells), with thick, finely wrinkled walls and a rigid conical distal cell in side view [E]; rare fragments from the ovary [G] bearing paired, covering trichomes with a distinctly pitted central wall and a bifid apex in surface view [Ga] or in side view [Gb]; vascular tissue from the stems [L] composed of vessels [La] and groups of fibres [Lb]; fragments of the epidermis of the petals with a striated cuticle, through which run fine spiral vessels [S], and bearing biseriate glandular trichomes in side view [P]; spherical pollen grains, with 3 germinal pores and a spiny exine [J]; abundant pappus hairs and their fragments [C, D], multiseriate with the marginal cells overlapping outwards; fragments of parenchyma [Q], some showing cells containing small, isolated cluster crystals of calcium oxalate [Qa]; fragments of bracts [R] with a finely striated cuticle, polygonal cells [Ra], bearing pennant-like covering trichomes [Rb] and whose margin bears uniseriate, multicellular covering trichomes [Rc].

C. Thin-layer chromatography (*2.2.27*) as described in the test for *Solidago gigantea* Ait. and *Solidago canadensis* L.

Results: see below the sequence of the zones present in the chromatograms obtained with the reference solution and the test solution. Furthermore, other fluorescent zones may be present in the chromatogram obtained with the test solution.

Top of the plate	
	A light blue fluorescent zone
Quercitrin: an orange fluorescent zone	
Chlorogenic acid: a light blue fluorescent zone	A light blue fluorescent zone (chlorogenic acid)
Rutin: an orange fluorescent zone	An orange fluorescent zone (rutin)
Reference solution	**Test solution**

TESTS

Foreign matter (*2.8.2*): maximum 5 per cent of brown coloured matter and maximum 5 per cent of other foreign matter.

***Solidago gigantea* Ait. and *Solidago canadensis* L.** Thin-layer chromatography (*2.2.27*).

Test solution. To 0.75 g of the powdered herbal drug (355) (*2.9.12*) add 5 mL of *methanol R* and heat on a water-bath under a reflux condenser for 10 min. Cool and filter.

Reference solution. Dissolve 1.0 mg of *chlorogenic acid R*, 2.5 mg of *quercitrin R* and 2.5 mg of *rutin R* in 10 mL of *methanol R*.

Plate: *TLC silica gel plate R*.

Mobile phase: *anhydrous formic acid R*, *water R*, *methyl ethyl ketone R*, *ethyl acetate R* (6:6:18:30 *V/V/V/V*).

Application: 20 µL as bands.

Development: over a path of 10 cm.

Drying: in air.

Detection: treat the plate with a 10 g/L solution of *diphenylboric acid aminoethyl ester R* in *methanol R* and then with a 50 g/L solution of *macrogol 400 R* in *methanol R*. Examine in ultraviolet light at 365 nm after 30 min.

Results: the chromatogram obtained with the test solution shows no strong orange fluorescent zone similar in position to the zone of quercitrin in the chromatogram obtained with the reference solution.

Loss on drying (*2.2.32*): maximum 12.0 per cent, determined on 1.000 g of the powdered herbal drug (355) (*2.9.12*) by drying in an oven at 105 °C for 2 h.

Total ash (*2.4.16*): maximum 8.0 per cent.

ASSAY

Stock solution. In a 100 mL round-bottomed flask, place 0.200 g of the powdered herbal drug (355) (*2.9.12*), add 1 mL of a 5 g/L solution of *hexamethylenetetramine R*, 20 mL of *acetone R* and 2 mL of *hydrochloric acid R1*. Boil the mixture in a water-bath under a reflux condenser for 30 min. Filter the liquid through a small plug of absorbent cotton into a 100 mL flask. Add the absorbent cotton to the residue in the round-bottomed flask and extract with 2 quantities, each of 20 mL, of *acetone R*, each time boiling under a reflux condenser for 10 min. Allow to cool. Filter the combined acetone extracts through filter paper, dilute to 100.0 mL with *acetone R*, rinsing the volumetric flask and the filter paper with acetone. Introduce 20.0 mL of the solution into a suitable separating funnel, add 20 mL of *water R* and shake the mixture with 1 quantity of 15 mL and then with 3 quantities, each of 10 mL, of *ethyl acetate R*. Combine the ethyl acetate extracts in a separating funnel, wash twice with 50 mL of *water R* and filter the extracts over 10 g of *anhydrous sodium sulfate R* into a volumetric flask. Dilute to 50.0 mL with *ethyl acetate R*, rinsing the separating funnel and the sodium sulfate.

Test solution. To 10.0 mL of the stock solution add 1.0 mL of *aluminium chloride reagent R* and dilute to 25.0 mL with a 5 per cent *V/V* solution of *glacial acetic acid R* in *methanol R*.

Compensation liquid. Dilute 10.0 mL of the stock solution to 25.0 mL with a 5 per cent *V/V* solution of *glacial acetic acid R* in *methanol R*.

After 30 min, measure the absorbance (*2.2.25*) of the test solution at 425 nm by comparison with the compensation liquid.

Calculate the percentage content of flavonoids, expressed as hyperoside, using the following expression:

$$\frac{A \times 1.25}{m}$$

i.e. taking the specific absorbance of hyperoside to be 500.

A = measured absorbance at 425 nm;

m = mass of the herbal drug to be examined, in grams.

01/2011:1831

GOLDENSEAL RHIZOME

Hydrastis rhizoma

DEFINITION

Whole or cut, dried rhizome and root of *Hydrastis canadensis* L.

Herbal drugs

Content:

- *hydrastine* ($C_{21}H_{21}NO_6$; M_r 383.4): minimum 2.5 per cent (dried drug);
- *berberine* ($C_{20}H_{18}NO_4$; M_r 336.4): minimum 3.0 per cent (dried drug).

IDENTIFICATION

A. The rhizome is tortuous and knotty, about 5 cm long and 5-10 mm thick. The surface is yellowish or brownish-grey, irregularly wrinkled, and bears the remains of numerous slender, wiry roots; stem bases and scale leaves occur on the upper surface. The fracture is short and resinous. The transversely cut surface is yellowish-brown and shows a fairly wide bark, a ring of 12-20 widely separated xylem bundles and a large, central pith.

B. Reduce to a powder (180) (*2.9.12*). The powder is greenish-yellow. Examine under a microscope using *chloral hydrate solution R*. The powder shows the following diagnostic characters (Figure 1831.-1): abundant thin-walled fragments of parenchyma [A, G, K]; occasional fragments of yellowish-brown cork from the rhizome and roots, in surface view [J] or in transverse section [F]; groups of small vessels with conspicuous perforations in the oblique end walls [L] and with simple or bordered, slit-shaped pits [B, D, E]; infrequent groups of thin-walled, pitted fibres [H], usually found associated with the vessels; numerous ovoid or spherical, orange-brown granular masses. Examine under a microscope using a 50 per cent *V/V* solution of *glycerol R*. The powder shows abundant starch granules [C], mostly simple but sometimes compound with up to 4 components; the granules are small, spherical or ovoid, up to about 10 µm in diameter, occasionally with a small, rounded or slit-shaped hilum.

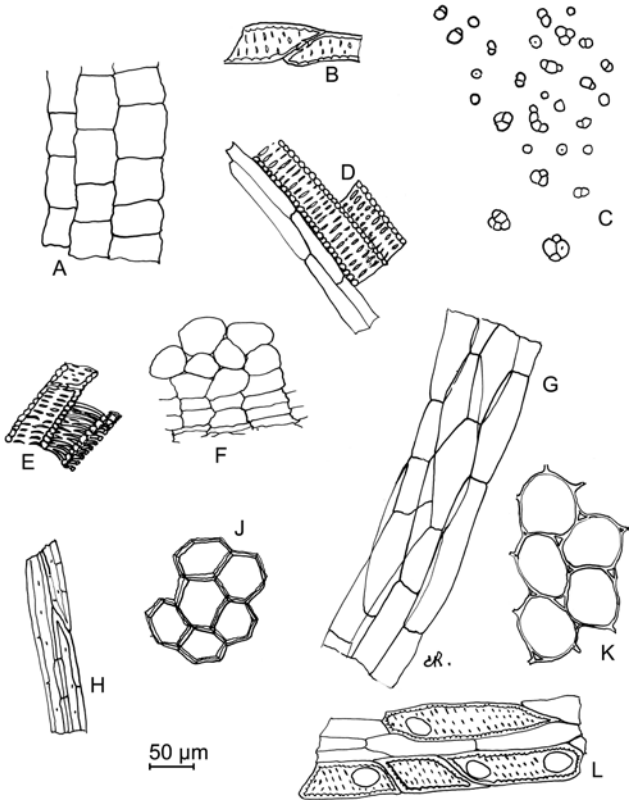

Figure 1831.-1. – *Illustration for identification test B of powdered herbal drug of goldenseal rhizome*

C. Thin-layer chromatography (*2.2.27*).

Test solution. To 250 mg of the powdered herbal drug (180) (*2.9.12*) add 4 mL of a mixture of 20 volumes of *water R* and 80 volumes of *methanol R*. Sonicate for 10 min and filter. Wash the residue with 2 quantities, each of 2 mL, of *methanol R*. Combine the solutions and dilute to 20 mL with *methanol R*.

Reference solution. Immediately before use, dissolve 5 mg of *hydrastine hydrochloride R* and 5 mg of *berberine chloride R* in 20 mL of *methanol R*.

Plate: *TLC silica gel plate R* (5-40 µm) [or *TLC silica gel plate R* (2-10 µm)].

Mobile phase: *anhydrous formic acid R*, *water R*, *ethyl acetate R* (10:10:80 *V/V/V*).

Application: 20 µL [or 2 µL] as bands.

Development: over a path of 15 cm [or 6 cm].

Drying: in air.

Detection: examine in ultraviolet light at 365 nm.

Results: see below the sequence of zones present in the chromatograms obtained with the reference solution and the test solution. Furthermore, other fluorescent zones may be present in the chromatogram obtained with the test solution.

Top of the plate	
———	———
Berberine: a bright yellow fluorescent zone	A bright yellow fluorescent zone (berberine)
Hydrastine: a deep blue fluorescent zone	A deep blue fluorescent zone (hydrastine)
———	———
	A bright light blue fluorescent zone (hydrastinine)
	A deep blue fluorescent zone
Reference solution	**Test solution**

TESTS

Loss on drying (*2.2.32*): maximum 10.0 per cent, determined on 1.000 g of the powdered herbal drug (180) (*2.9.12*) by drying in an oven at 105 °C for 2 h.

Total ash (*2.4.16*): maximum 8.0 per cent.

Ash insoluble in hydrochloric acid (*2.8.1*): maximum 4.0 per cent.

ASSAY

Liquid chromatography (*2.2.29*).

Test solution. To 1.000 g of the powdered herbal drug (355) (*2.9.12*) in a 100 mL round-bottomed flask, add 50 mL of a 1 per cent *V/V* solution of *concentrated ammonia R* in *ethanol (96 per cent) R* and boil the mixture under a reflux condenser for 30 min. Allow to cool to room temperature and filter the liquid through a plug of absorbent cotton into a flask. Add the plug of absorbent cotton to the residue in the round-bottomed flask and repeat the extraction with a further 2 quantities, each of 30 mL, of a 1 per cent *V/V* solution of *concentrated ammonia R* in *ethanol (96 per cent) R*, each time boiling under a reflux condenser for 10 min and filtering through a plug of absorbent cotton in the same flask as previously. Filter the combined filtrates through a filter paper into a 250 mL round-bottomed flask, and rinse the flask and the filter with 20 mL of a 1 per cent *V/V* solution of *concentrated ammonia R* in *ethanol (96 per cent) R*. Evaporate the filtrate to dryness *in vacuo* in a water-bath at 55 °C. Dissolve the residue in 50.0 mL of the mobile phase. Dilute 10.0 mL of this solution to 50.0 mL with the mobile phase.

Reference solution. Immediately before use, dissolve 10.0 mg of *hydrastine hydrochloride CRS* and 10.0 mg of *berberine chloride CRS* in *methanol R* and dilute to 100.0 mL with the same solvent.

Column:

- *size*: *l* = 0.125 m, Ø = 4 mm;

Herbal drugs

– *stationary phase*: *end-capped octadecylsilyl silica gel for chromatography R* (5 µm).

Mobile phase: dissolve 9.93 g of *potassium dihydrogen phosphate R* in 730 mL of *water R*, add 270 mL of *acetonitrile R* and mix.

Flow rate: 1.2 mL/min.

Detection: spectrophotometer at 235 nm.

Injection: 10 µL.

System suitability: reference solution:

– *elution order*: order indicated in the composition of the reference solution; record the retention times of these substances;
– *resolution*: minimum 1.5 between the peaks due to hydrastine and berberine.

Using the retention times determined from the chromatogram obtained with the reference solution, locate in the chromatogram obtained with the test solution the components of the reference solution.

Calculate the percentage content of each alkaloid (hydrastine and berberine) using the following expression:

$$\frac{A_1 \times m_2 \times p}{A_2 \times m_1} \times 2.5$$

A_1 = area of the peak due to hydrastine or berberine in the chromatogram obtained with the test solution;

A_2 = area of the peak due to hydrastine or berberine in the chromatogram obtained with the reference solution;

m_1 = mass of the herbal drug to be examined used to prepare the test solution, in grams;

m_2 = mass of *hydrastine hydrochloride CRS* or *berberine chloride CRS* used to prepare the reference solution, in grams;

p = percentage content of hydrastine in *hydrastine hydrochloride CRS* or berberine in *berberine chloride CRS*.

07/2012:1861

GREATER CELANDINE

Chelidonii herba

DEFINITION

Dried, whole or cut aerial parts of *Chelidonium majus* L. collected during flowering.

Content: minimum 0.6 per cent of total alkaloids, expressed as chelidonine ($C_{20}H_{19}NO_5$; M_r 353.4) (dried drug).

IDENTIFICATION

A. The stems are rounded, ribbed, yellowish or greenish-brown, somewhat pubescent, about 3-7 mm in diameter, hollow and mostly collapsed. The leaves are thin, irregularly pinnate, the leaflets ovate to oblong with coarsely dentate margins, the terminal leaflet often 3-lobed; the adaxial surface is bluish-green and glabrous, the abaxial surface paler and pubescent, especially on the veins. The flowers have 2 deeply concavo-convex sepals, readily removed, and 4 yellow, broadly ovate, spreading petals about 8-10 mm long; the stamens are numerous, yellow, and a short style arises from a superior ovary; long, capsular, immature fruits are rarely present.

B. Microscopic examination (*2.8.23*). The powder is dark greyish-green or brownish-green. Examine under a microscope using *chloral hydrate solution R*. The powder shows the following diagnostic characters (Figure 1861.-1): numerous fragments of upper epidermis, composed of cells with sinuous walls in surface view [B], accompanied by underlying palisade parenchyma [Ba]; numerous fragments of lower epidermis in surface view [A, E] bearing anomocytic stomata (*2.8.3*) [Aa] and bases of covering trichomes [Ab], sometimes accompanied by underlying spongy parenchyma [Ea]; long, uniseriate, multicellular covering trichomes, usually fragmented, with thin-walled cells, sometimes collapsed [G]; vascular tissue from the leaves and stems consisting of pitted and spirally thickened vessels [D]; groups of fibres [C]; articulated latex tubes with yellowish-brown contents [F]; occasional fragments of the corolla [H] consisting of thin-walled cells containing numerous pale yellow droplets of oil [Ha]; spherical pollen grains about 30-40 µm in diameter with 3 pores and a finely pitted exine [J].

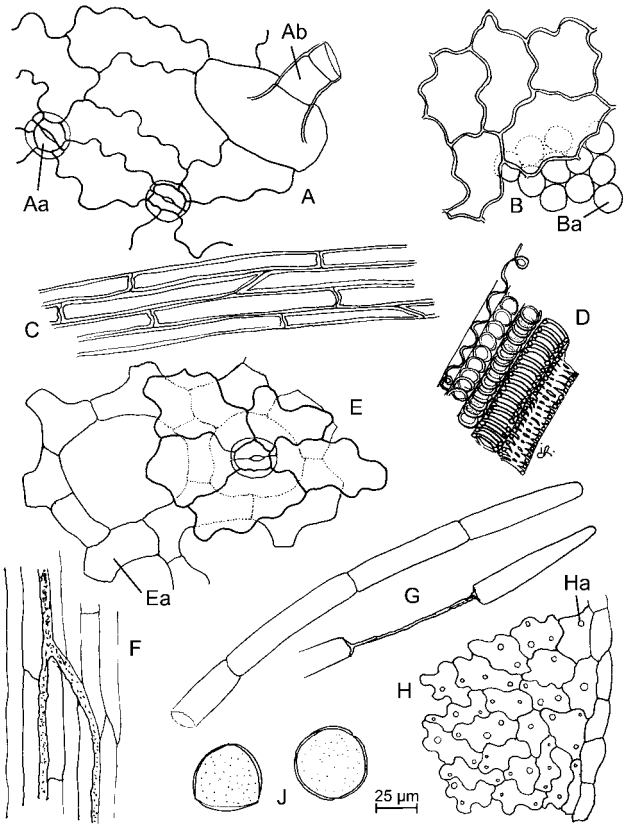

Figure 1861.-1. – *Illustration for identification test B of powdered herbal drug of greater celandine*

C. Thin-layer chromatography (*2.2.27*).

Test solution. To 0.4 g of the powdered herbal drug (710) (*2.9.12*) add 50 mL of *dilute acetic acid R*. Boil in a water-bath under a reflux condenser for 30 min. Cool and filter. To the filtrate add *concentrated ammonia R* until a strong alkaline reaction is produced. Shake with 30 mL of *methylene chloride R*. Dry the organic layer over *anhydrous sodium sulfate R*, filter and evaporate *in vacuo* to dryness. Dissolve the residue in 1.0 mL of *methanol R*.

Reference solution. Dissolve 2 mg of *methyl red R* and 2 mg of *papaverine hydrochloride R* in 10 mL of *ethanol (96 per cent) R*.

Plate: *TLC silica gel plate R*.

Mobile phase: *anhydrous formic acid R*, *water R*, *propanol R* (1:9:90 *V/V/V*).

Application: 10 µL as bands.

Development: over a path of 10 cm.

Drying: in air.

Detection: spray with *potassium iodobismuthate solution R* and dry in air; spray with *sodium nitrite solution R* and allow to dry in air; examine in daylight.

Results: see below the sequence of zones present in the chromatograms obtained with the reference solution and the test solution. Furthermore, other weaker zones may be present in the chromatogram obtained with the test solution.

Top of the plate	
———	———
Methyl red: a red zone	A brown zone
	A brown zone
Papaverine: a greyish-brown zone	A greyish-brown zone
———	———
	2 brown zones
Reference solution	**Test solution**

TESTS

Foreign matter (*2.8.2*): maximum 10.0 per cent.

Loss on drying (*2.2.32*): maximum 10.0 per cent, determined on 1.000 g of the powdered herbal drug (355) (*2.9.12*) by drying in an oven at 105 °C for 2 h.

Total ash (*2.4.16*): maximum 13.0 per cent.

ASSAY

Test solution. To 0.750 g of the powdered herbal drug (710) (*2.9.12*) add 200 mL of *dilute acetic acid R* and heat on a water-bath for 30 min, shaking frequently. Cool and dilute to 250.0 mL with *dilute acetic acid R*. Filter. Discard the first 20 mL of the filtrate. To 30.0 mL of the filtrate add 6.0 mL of *concentrated ammonia R* and 100.0 mL of *methylene chloride R*. Shake for 30 min. Separate the organic layer, place 50.0 mL in a 100 mL round-bottomed flask and evaporate to dryness *in vacuo* at a temperature not exceeding 40 °C. Dissolve the residue in about 2-3 mL of *ethanol (96 per cent) R*, warming slightly. Transfer the solution to a 25 mL volumetric flask by rinsing the round-bottomed flask with *dilute sulfuric acid R* and dilute to 25.0 mL with the same solvent. To 5.0 mL of the solution add 5.0 mL of a 10 g/L solution of *chromotropic acid, sodium salt R* in *sulfuric acid R* in a 25 mL volumetric flask, stopper the flask and mix carefully. Dilute to 25.0 mL with *sulfuric acid R* and stopper the flask.

Compensation liquid. Prepare at the same time and in the same manner as for the test solution: place in a 25 mL volumetric flask 5.0 mL of *dilute sulfuric acid R* and 5.0 mL of a 10 g/L solution of *chromotropic acid, sodium salt R* in *sulfuric acid R*, stopper the flask and mix carefully. Dilute to 25.0 mL with *sulfuric acid R* and stopper the flask.

Place both solutions on a water-bath for 10 min. Cool to about 20 °C and dilute if necessary to 25.0 mL with *sulfuric acid R*. Measure the absorbance (*2.2.25*) of the test solution at 570 nm by comparison with the compensation liquid.

Calculate the percentage content of total alkaloids, expressed as chelidonine, using the following expression:

$$\frac{A \times 2.23}{m}$$

i.e. taking the specific absorbance of chelidonine to be 933.

A = absorbance at 570 nm;

m = mass of the herbal drug to be examined, in grams.

01/2010:1218

GUAR

Cyamopsidis seminis pulvis

DEFINITION

Guar is obtained by grinding the endosperms of seeds of *Cyamopsis tetragonolobus* (L.) Taub. It consists mainly of guar galactomannan.

CHARACTERS

Appearance: white or almost white powder.

Solubility: it yields a mucilage of variable viscosity when dissolved in water, practically insoluble in ethanol (96 per cent).

IDENTIFICATION

A. Examined under a microscope in *glycerol R*, the substance to be examined (125) (*2.9.12*) shows pyriform or ovoid cells, usually isolated, having very thick walls around a central somewhat elongated lumen with granular contents, and smaller polyhedral cells, isolated or in clusters, with thinner walls.

B. In a conical flask place 2 g, add rapidly 45 mL of *water R* and stir vigorously for 30 s. After 5-10 min a stiff gel forms which does not flow when the flask is inverted.

C. Mix a suspension of 0.1 g in 10 mL of *water R* with 1 mL of a 10 g/L solution of *disodium tetraborate R*; the mixture soon gels.

D. Thin-layer chromatography (*2.2.27*).

Test solution. To 10 mg of the substance to be examined in a thick-walled centrifuge tube add 2 mL of a 100 g/L solution of *trifluoroacetic acid R*, shake vigorously to dissolve the forming gel, stopper the tube and heat the mixture at 120 °C for 1 h. Centrifuge the hydrolysate, transfer the clear supernatant carefully into a 50 mL flask, add 10 mL of *water R* and evaporate the solution to dryness under reduced pressure. To the resulting clear film add 0.1 mL of *water R* and 0.9 mL of *methanol R*. Centrifuge to separate the amorphous precipitate. Dilute the supernatant, if necessary, to 1 mL with *methanol R*.

Reference solution. Dissolve 10 mg of *galactose R* and 10 mg of *mannose R* in 2 mL of *water R*, then dilute to 20 mL with *methanol R*.

Plate: *TLC silica gel plate R*.

Mobile phase: *water R*, *acetonitrile R* (15:85 *V/V*).

Application: 5 µL, as bands.

Development: over a path of 15 cm.

Detection: spray with *aminohippuric acid reagent R* and dry at 120 °C for 5 min.

Results: the chromatogram obtained with the reference solution shows in the lower part 2 clearly separated brownish zones due to galactose and mannose in order of increasing R_F value; the chromatogram obtained with the test solution shows 2 zones due to galactose and mannose.

TESTS

Tragacanth, sterculia gum, agar, alginates, carrageenan. To a small amount of the substance to be examined add 0.2 mL of freshly prepared *ruthenium red solution R*. Examined under a microscope the cell walls do not stain red.

Protein: maximum 8.0 per cent.

Carry out the determination of nitrogen by sulfuric acid digestion (*2.5.9*), using 0.170 g. Multiply the result by 6.25.

Apparent viscosity (*2.2.10*): 85 per cent to 115 per cent of the value stated on the label.

Moisten a quantity equivalent to 1.00 g of the dried substance with 2.5 mL of *2-propanol R*. While stirring, dilute to 100.0 mL

Herbal drugs

with *water R*. After 1 h, determine the viscosity at 20 °C using a rotating viscometer and a shear rate of 100 s^{-1}.

Loss on drying (*2.2.32*): maximum 15.0 per cent, determined on 1.000 g by drying in an oven at 105 °C for 5 h.

Total ash (*2.4.16*): maximum 1.8 per cent.

Microbial contamination

TAMC: acceptance criterion 10^4 CFU/g (*2.6.12*).

TYMC: acceptance criterion 10^2 CFU/g (*2.6.12*).

Absence of *Escherichia coli* (*2.6.13*).

Absence of *Salmonella* (*2.6.13*).

LABELLING

The label states the apparent viscosity in millipascal seconds for a 10 g/L solution.

FUNCTIONALITY-RELATED CHARACTERISTICS

This section provides information on characteristics that are recognised as being relevant control parameters for one or more functions of the substance when used as an excipient (see chapter 5.15). This section is a non-mandatory part of the monograph and it is not necessary to verify the characteristics to demonstrate compliance. Control of these characteristics can however contribute to the quality of a medicinal product by improving the consistency of the manufacturing process and the performance of the medicinal product during use. Where control methods are cited, they are recognised as being suitable for the purpose, but other methods can also be used. Wherever results for a particular characteristic are reported, the control method must be indicated.

The following characteristics may be relevant for guar used as viscosity-increasing agent or binder.

Apparent viscosity: see Tests.

01/2011:0909

HAMAMELIS LEAF

Hamamelidis folium

DEFINITION

Whole or cut, dried leaf of *Hamamelis virginiana* L.

Content: minimum 3 per cent of tannins, expressed as pyrogallol ($C_6H_6O_3$; M_r 126.1) (dried drug).

IDENTIFICATION

A. The leaf is green or greenish-brown, often broken, crumpled and compressed into more or less compact masses. The lamina is broadly ovate or obovate; the base is oblique and asymmetric and the apex is acute or, rarely, obtuse. The margins of the lamina are roughly crenate or dentate. The venation is pinnate and prominent on the abaxial surface. Usually, 4-6 pairs of secondary veins are attached to the main vein, emerging at an acute angle and curving gently to the marginal points where there are fine veins often at right angles to the secondary veins.

B. Reduce to a powder (355) (*2.9.12*). The powder is brownish-green. Examine under a microscope using *chloral hydrate solution R*. The powder shows the following diagnostic characters (Figure 0909.-1): fragments of adaxial epidermis with wavy anticlinal walls, in surface view [C, J], often accompanied by small, cylindrical cells of the palisade parenchyma, in surface view [Ja], or elongated, in transverse section [F]; fragments of abaxial epidermis with stomata mainly paracytic (*2.8.3*), in surface view [B], which may be accompanied by irregular-shaped cells of spongy mesophyll [K, L]; star-shaped covering trichomes, either entire or broken [A, D, M], composed of 4-12 unicellular branches that are united by their bases, elongated, conical and curved, usually up to 250 µm long, thick-walled and with a clearly visible lumen whose contents are often brown; fibres are lignified and thick-walled, isolated or in groups, and accompanied by a sheath of prismatic calcium oxalate crystals [N, P]; sclereids, frequently enlarged at 1 or both ends, 150-180 µm long, whole or fragmented [H]; fragments of annular or spiral vessels [E]; isolated prisms of calcium oxalate [G].

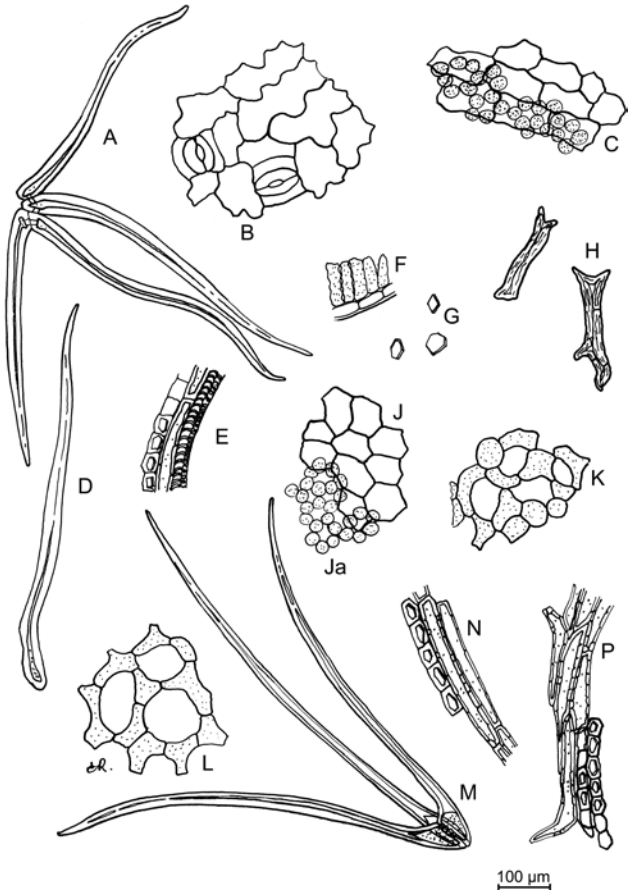

Figure 0909.-1. – *Illustration for identification test B of powdered herbal drug of hamamelis leaf*

C. Thin-layer chromatography (*2.2.27*).

Test solution. To 1.0 g of the powdered herbal drug (355) (*2.9.12*) add 10 mL of *ethanol (60 per cent V/V) R*, shake for 15 min and filter.

Reference solution (a). Dissolve 30 mg of *tannic acid R* in 5 mL of *ethanol (60 per cent V/V) R*.

Reference solution (b). Dissolve 5 mg of *gallic acid R* in 5 mL of *ethanol (60 per cent V/V) R*.

Plate: *TLC silica gel G plate R*.

Mobile phase: *anhydrous formic acid R*, *water R*, *ethyl formate R* (10:10:80 *V/V/V*).

Application: 10 µL, as bands.

Development: over a path of 10 cm.

Drying: at 100-105 °C for 10 min, then allow to cool.

Detection: spray with *ferric chloride solution R2* until bluish-grey zones (phenolic compounds) appear.

Results: the chromatogram obtained with the test solution shows in its lower third a principal zone similar in position to the principal zone in the chromatogram obtained with reference solution (a) and, in its upper part, a narrow zone similar in position to the principal zone in the chromatogram obtained with reference solution (b); the chromatogram obtained with the test solution shows, in addition, several slightly coloured zones in the central part.

TESTS

Foreign matter (*2.8.2*): maximum 7 per cent of stems and maximum 2 per cent of other foreign matter, determined on 50 g.

Loss on drying (*2.2.32*): maximum 10.0 per cent, determined on 2.000 g of the powdered herbal drug (355) (*2.9.12*) by drying in an oven at 105 °C for 4 h.

Total ash (*2.4.16*): maximum 7.0 per cent.

Ash insoluble in hydrochloric acid (*2.8.1*): maximum 2.0 per cent.

ASSAY

Tannins (*2.8.14*). Use 0.750 g of the powdered herbal drug (180) (*2.9.12*).

04/2013:1220

HAWTHORN BERRIES

Crataegi fructus

DEFINITION

Dried false fruits of *Crataegus monogyna* Jacq. (Lindm.) or *C. laevigata* (Poir.) DC. (syn. *C. oxyacantha* L.) or their hybrids or a mixture of these false fruits.

Content: minimum 0.06 per cent of procyanidins, expressed as cyanidin chloride ($C_{15}H_{11}ClO_6$; M_r 322.7) (dried drug).

IDENTIFICATION

A. The false fruit of *C. monogyna* is obovate or globular, generally 6-10 mm long and 4-8 mm wide, reddish-brown or dark red. The surface is pitted or, more rarely, reticulated. The upper end of the fruit is crowned by the remains of 5 reflexed sepals surrounding a small, sunken disc with a shallow, raised rim. The remains of the style occur in the centre of the disc with tufts of stiff, colourless hairs at the base. At the lower end of the fruit is a short length of pedicel or, more frequently, a small, pale, circular scar where the pedicel was attached. The receptacle is fleshy and encloses a yellowish-brown, ovoid fruit with a hard, thick wall containing a single, elongated, pale brown, smooth and shiny seed.

The false fruit of *C. laevigata* is up to 13 mm long. It contains 2-3 stony fruits, ventrally flattened, with short hairs at the top. Frequently, in the centre of the disc of the false fruit occur the remains of the 2 styles.

B. Microscopic examination (*2.8.23*). The powder is greyish-red. Examine under a microscope using *chloral hydrate solution R*. The powder shows the following diagnostic characters (Figure 1220.-1): covering trichomes [F] from inside the disc that are long, unicellular, frequently bent, tapering to a point, with much thickened and lignified walls; fragments of the red outer layer of the receptacle, in surface view [G]; fragments of the inner layers of the receptacle [A], some cells containing cluster crystals [Aa] or prisms [Ab] of calcium oxalate; occasional fragments [J, K] including groups of sclereids [Ka] and vascular bundles [Ja, Kb] associated with rows of cells containing prisms of calcium oxalate [Jb, Kc]; fragments of the pericarp [B] consisting of parenchyma including some cells containing cluster crystals of calcium oxalate [Ba] and groups of sclereids of various sizes with numerous pits [Bb]; thick-walled sclereids [E, H], some channelled (E), some with conspicuously branched channels (H); a few fragments of the testa [C] having an outer layer composed of hexagonal, mucilaginous cells [Ca] beneath which is a yellowish-brown pigment layer containing numerous prisms of calcium oxalate [Cb]; parenchyma of the endosperm and cotyledons consisting of cells containing aleurone grains and globules of fixed oil [D].

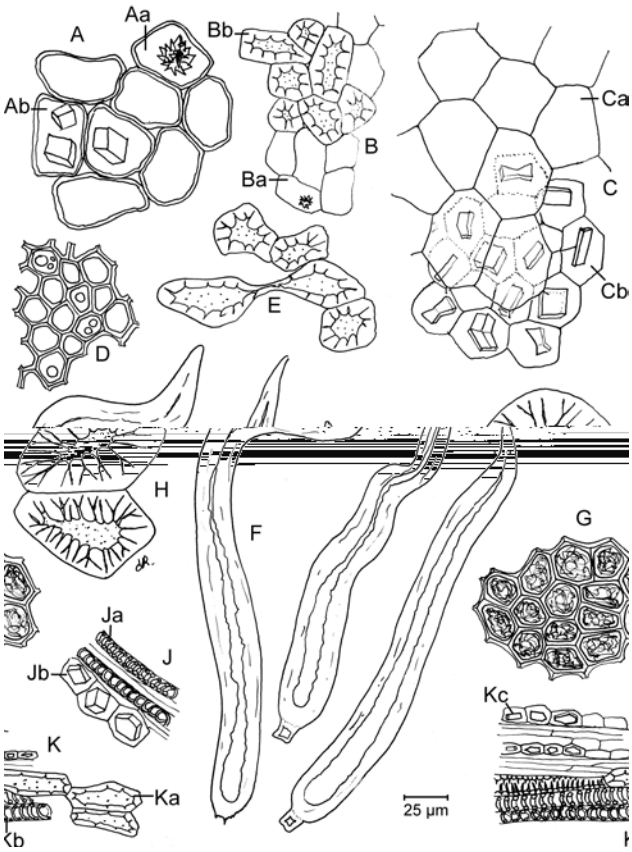

Figure 1220.-1. – *Illustration for identification test B of powdered herbal drug of hawthorn berries*

C. Thin-layer chromatography (*2.2.27*).

Test solution. To 1 g of the powdered herbal drug (355) (*2.9.12*) add 10 mL of *methanol R* and heat on a water bath at 65 °C for 5 min, shaking frequently. Allow to cool to room temperature and filter. Dilute the filtrate to 10 mL with *methanol R*.

Reference solution. Dissolve 2 mg of *chlorogenic acid R*, 2 mg of *caffeic acid R*, 5 mg of *hyperoside R* and 5 mg of *rutin R* in 20 mL of *methanol R*.

Plate: *TLC silica gel plate R*.

Mobile phase: *anhydrous formic acid R*, *water R*, *methyl ethyl ketone R*, *ethyl acetate R* (10:10:30:50 *V/V/V/V*).

Application: 30 µL of the test solution and 10 µL of the reference solution, as bands.

Development: over a path of 15 cm.

Drying: at 100-105 °C.

Detection: spray whilst hot with a 10 g/L solution of *diphenylboric acid aminoethyl ester R* in *methanol R*; subsequently spray with a 50 g/L solution of *macrogol 400 R* in *methanol R*; allow to dry in air for 30 min and examine in ultraviolet light at 365 nm.

Results: the chromatogram obtained with the reference solution shows in the lower half, in order of increasing R_F values, a yellowish-brown fluorescent zone (rutin), a light blue fluorescent zone (chlorogenic acid) and a yellowish-brown fluorescent zone (hyperoside); in the upper third appears a light blue fluorescent zone (caffeic acid). The chromatogram obtained with the test solution shows 3 zones similar in position and fluorescence to the zones due to chlorogenic acid, hyperoside and caffeic acid in the chromatogram obtained with the reference solution, and 3 weak reddish fluorescent zones, one corresponding to the zone due to rutin in the chromatogram obtained with the reference solution and both of the others located above the zone due to hyperoside; below and above the zone due to caffeic acid some light blue zones appear.

TESTS

Foreign matter (*2.8.2*): maximum 5 per cent of deteriorated false fruit and maximum 2 per cent of other foreign matter. It does not contain false fruits of other *Crataegus* species (*C. nigra* Waldst. et Kit., *C. pentagyna* Waldst. et Kit. ex Willd. and *C. azarolus* L.), which are characterised by the presence of more than 3 hard stones.

Loss on drying (*2.2.32*): maximum 12.0 per cent, determined on 1.000 g of the powdered herbal drug (355) (*2.9.12*) by drying in an oven at 105 °C for 2 h.

Total ash (*2.4.16*): maximum 5.0 per cent.

ASSAY

To 2.50 g of the powdered herbal drug (355) (*2.9.12*) add 30 mL of *ethanol (70 per cent V/V) R*. Heat under a reflux condenser for 30 min and filter. Wash the residue with 10.0 mL of *ethanol (70 per cent V/V) R*. Add to the filtrate 15.0 mL of *hydrochloric acid R1* and 10.0 mL of *water R*. Heat under a reflux condenser for 80 min. Allow to cool, filter and wash the residue with *ethanol (70 per cent V/V) R* until the filtrate is colourless. Dilute the filtrate to 250.0 mL with *ethanol (70 per cent V/V) R*. Evaporate 50.0 mL of this solution in a round-bottomed flask to about 3 mL and transfer to a separating funnel. Rinse the round-bottomed flask sequentially with 10 mL and 5 mL of *water R* and transfer to the separating funnel. Shake the combined solution with 3 quantities, each of 15 mL, of *butanol R*. Combine the organic layers and dilute to 100.0 mL with *butanol R*.

Measure the absorbance (*2.2.25*) of the solution at 555 nm.

Calculate the percentage content of procyanidins, expressed as cyanidin chloride, using the following expression:

$$\frac{A \times 500}{1200 \times m}$$

i.e. taking the specific absorbance of cyanidin chloride to be 1200.

A = absorbance at 555 nm;

m = mass of the substance to be examined, in grams.

01/2010:1432

HAWTHORN LEAF AND FLOWER

Crataegi folium cum flore

DEFINITION

Whole or cut, dried flower-bearing branches of *Crataegus monogyna* Jacq. (Lindm.), *C. laevigata* (Poir.) DC. (syn. *C. oxyacanthoides* Thuill.; *C. oxyacantha* auct.) or their hybrids or, more rarely, other European *Crataegus* species including *C. pentagyna* Waldst. et Kit. ex Willd., *C. nigra* Waldst. et Kit. and *C. azarolus* L.

Content: minimum 1.5 per cent of total flavonoids, expressed as hyperoside ($C_{21}H_{20}O_{12}$; M_r 464.4) (dried drug).

IDENTIFICATION

A. The stems are dark brown, woody, 1-2.5 mm in diameter, bearing alternate, petiolate leaves with small, often deciduous stipules and corymbs of numerous small white flowers. The leaves are more or less deeply lobed with slightly serrate or almost entire margins; those of *C. laevigata* are pinnately lobed or pinnatifid with 3, 5 or 7 obtuse lobes, those of *C. monogyna* pinnatisect with 3 or 5 acute lobes; the adaxial surface is dark green or brownish-green, the abaxial surface is lighter greyish-green and shows a prominent, dense, reticulate venation. The leaves of *C. laevigata*, *C. monogyna* and *C. pentagyna* are glabrous or bear only isolated trichomes, those of *C. azarolus* and *C. nigra* are densely pubescent. The flowers have a brownish-green tubular calyx composed of 5 free, reflexed sepals, a corolla composed of 5 free, yellowish-white or brownish, rounded or broadly ovate and shortly unguiculate petals and numerous stamens. The ovary is fused to the calyx and consists of 1-5 carpels, each with a long style and containing a single ovule; in *C. monogyna* there is 1 carpel, in *C. laevigata* 2 or 3, in *C. azarolus* 2 or 3, or sometimes only 1, in *C. pentagyna* 5 or, rarely, 4.

B. Reduce to a powder (355) (*2.9.12*). The powder is yellowish-green. Examine under a microscope using *chloral hydrate solution R*. The powder shows the following diagnostic characters: unicellular covering trichomes, usually with a thick wall and wide lumen, almost straight or slightly curved, pitted at the base; fragments of leaf epidermis with cells which have sinuous or polygonal anticlinal walls and with large anomocytic stomata (*2.8.3*) surrounded by 4-7 subsidiary cells; parenchymatous cells of the mesophyll containing calcium oxalate clusters, usually measuring 10-20 µm, those associated with the veins containing groups of small prism crystals; fragments of petals showing rounded polygonal epidermal cells, strongly papillose, with thick walls, the cuticle of which clearly shows wavy striations; fragments of anthers showing endothecium with an arched and regularly thickened margin; fragments of stems containing collenchymatous cells, bordered pitted vessels and groups of lignified sclerenchymatous fibres with narrow lumina; numerous spherical to elliptical or triangular pollen grains up to 45 µm in diameter, with 3 germinal pores and a faintly granular exine.

C. Thin-layer chromatography (*2.2.27*).

Test solution. To 1.0 g of the powdered herbal drug (355) (*2.9.12*) add 10 mL of *methanol R* and heat in a water-bath at 65 °C under a reflux condenser for 5 min. Cool and filter.

Reference solution. Dissolve 1.0 mg of *chlorogenic acid R* and 2.5 mg of *hyperoside R* in 10 mL of *methanol R*.

Plate: *TLC silica gel plate R*.

Mobile phase: *anhydrous formic acid R*, *water R*, *methyl ethyl ketone R*, *ethyl acetate R* (10:10:30:50 *V/V/V/V*).

Application: 20 µL as bands.

Development: over a path of 15 cm.

Drying: at 100-105 °C.

Detection: spray the still-warm plate with a 10 g/L solution of *diphenylboric acid aminoethyl ester R* in *methanol R*, then spray with a 50 g/L solution of *macrogol 400 R* in *methanol R*; allow to dry in air for about 30 min and examine in ultraviolet light at 365 nm.

Results: see below the sequence of zones present in the chromatograms obtained with the reference solution and the test solution. Furthermore, other fluorescent zones may be present in the chromatogram obtained with the test solution.

Top of the plate	
	A yellowish-green fluorescent zone (vitexin)
Hyperoside: a yellowish-orange fluorescent zone	A yellowish-orange fluorescent zone (hyperoside)
Chlorogenic acid: a light blue fluorescent zone	A light blue fluorescent zone (chlorogenic acid)
	A yellowish-green fluorescent zone (vitexin-2″-rhamnoside)
Reference solution	**Test solution**

Herbal drugs

TESTS

Foreign matter (*2.8.2*): maximum 8 per cent of lignified branches with a diameter greater than 2.5 mm and maximum 2 per cent of other foreign matter.

Loss on drying (*2.2.32*): maximum 10.0 per cent, determined on 1.000 g of the powdered herbal drug (355) (*2.9.12*) by drying in an oven at 105 °C for 2 h.

Total ash (*2.4.16*): maximum 10.0 per cent.

ASSAY

Stock solution. Into a 200 mL flask introduce 0.400 g of the powdered herbal drug (250) (*2.9.12*) and 40 mL of *ethanol (60 per cent V/V) R*. Heat in a water-bath at 60 °C for 10 min, shaking frequently. Allow to cool and filter through a plug of absorbent cotton into a 100 mL volumetric flask. Transfer the absorbent cotton with the drug residue back to the 200 mL flask, add 40 mL of *ethanol (60 per cent V/V) R* and heat again in a water-bath at 60 °C for 10 min, shaking frequently. Allow to cool and filter into the same 100 mL volumetric flask. Rinse the 200 mL flask with a further quantity of *ethanol (60 per cent V/V) R*, filter and transfer to the same 100 mL volumetric flask. Dilute to 100.0 mL with *ethanol (60 per cent V/V) R* and filter.

Test solution. Introduce 5.0 mL of the stock solution into a round-bottomed flask and evaporate to dryness under reduced pressure. Take up the residue with 8 mL of a mixture of 10 volumes of *methanol R* and 100 volumes of *anhydrous acetic acid R* and transfer to a 25 mL volumetric flask. Rinse the round-bottomed flask with 3 mL of a mixture of 10 volumes of *methanol R* and 100 volumes of *anhydrous acetic acid R* and transfer to the same 25 mL volumetric flask. Add 10.0 mL of a solution containing 25.0 g/L of *boric acid R* and 20.0 g/L of *oxalic acid R* in *anhydrous formic acid R* and dilute to 25.0 mL with *anhydrous acetic acid R*.

Compensation liquid. Introduce 5.0 mL of the stock solution into a round-bottomed flask and evaporate to dryness under reduced pressure. Take up the residue with 8 mL of a mixture of 10 volumes of *methanol R* and 100 volumes of *anhydrous acetic acid R* and transfer to a 25 mL volumetric flask. Rinse the round-bottomed flask with 3 mL of a mixture of 10 volumes of *methanol R* and 100 volumes of *anhydrous acetic acid R* and transfer to the same 25 mL volumetric flask. Add 10.0 mL of *anhydrous formic acid R* and dilute to 25.0 mL with *anhydrous acetic acid R*.

After 30 min, measure the absorbance (*2.2.25*) of the test solution at 410 nm, by comparison with the compensation liquid.

Calculate the percentage content of total flavonoids, expressed as hyperoside, using the following expression:

$$\frac{A \times 1.235}{m}$$

i.e. taking the specific absorbance of hyperoside to be 405.

A = absorbance at 410 nm;

m = mass of the herbal drug to be examined, in grams.

01/2010:1865

HAWTHORN LEAF AND FLOWER DRY EXTRACT

Crataegi folii cum flore extractum siccum

DEFINITION

Dry extract produced from *Hawthorn leaf and flower (1432)*.

Content:

- for aqueous extracts: minimum 2.5 per cent of total flavonoids, expressed as hyperoside ($C_{21}H_{20}O_{12}$; M_r 464.4) (dried extract);
- for hydroalcoholic extracts: minimum 6.0 per cent of total flavonoids, expressed as hyperoside ($C_{21}H_{20}O_{12}$; M_r 464.4) (dried extract).

PRODUCTION

The extract is produced from the herbal drug by a suitable procedure using either water or a hydroalcoholic solvent at least equivalent in strength to ethanol (45 per cent *V/V*).

CHARACTERS

Appearance: light brown or greenish-brown powder.

IDENTIFICATION

Thin-layer chromatography (*2.2.27*).

Test solution. Suspend 0.2 g of the extract to be examined in 20 mL of *ethanol (70 per cent V/V) R* and filter.

Reference solution. Dissolve 1 mg of *chlorogenic acid R*, 2.5 mg of *hyperoside R* and 2.5 mg of *rutin R* in 10 mL of *methanol R*.

Plate: *TLC silica gel plate R*.

Mobile phase: *anhydrous formic acid R*, *water R*, *methyl ethyl ketone R*, *ethyl acetate R* (10:10:30:50 *V/V/V/V*).

Application: 20 µL of the test solution and 10 µL of the reference solution, as bands.

Development: over a path of 15 cm.

Drying: at 100-105 °C.

Detection: spray the still-warm plate with a 10 g/L solution of *diphenylboric acid aminoethyl ester R* in *methanol R*, then spray with a 50 g/L solution of *macrogol 400 R* in *methanol R*; allow to dry in air for 30 min and examine in ultraviolet light at 365 nm.

Results: see below sequence of zones present in the chromatograms obtained with the reference solution and the test solution. Furthermore, other fluorescent zones may be present in the chromatogram obtained with the test solution.

Top of the plate	
	A light yellow fluorescent zone
Hyperoside: a yellowish-orange fluorescent zone	A yellowish-orange fluorescent zone (hyperoside)
Chlorogenic acid: a light blue fluorescent zone	A light blue fluorescent zone (chlorogenic acid)
	A yellowish-green fluorescent zone (vitexin 2″-rhamnoside)
Rutin: a yellowish-orange fluorescent zone	A yellowish-orange fluorescent zone (rutin)
Reference solution	**Test solution**

TESTS

Loss on drying (*2.2.32*): maximum 6.0 per cent, determined on 0.500 g of the extract to be examined by drying in an oven at 105 °C for 2 h.

ASSAY

Stock solution. Dissolve 0.100 g of the extract to be examined in *ethanol (60 per cent V/V) R* and dilute to 100.0 mL with the same solvent.

Test solution. Introduce 5.0 mL of the stock solution into a round-bottomed flask and evaporate to dryness under reduced pressure. Take up the residue in 8 mL of a mixture of 10 volumes of *methanol R* and 100 volumes of *anhydrous acetic acid R* and transfer to a 25 mL volumetric flask. Rinse the round-bottomed flask with 3 mL of a mixture of 10 volumes of *methanol R* and 100 volumes of *anhydrous acetic acid R* and transfer to the same 25 mL volumetric flask. Add 10.0 mL of a solution containing 25.0 g/L of *boric acid R* and 20.0 g/L of *oxalic acid R* in *anhydrous formic acid R* and dilute to 25.0 mL with *anhydrous acetic acid R*.

Compensation liquid. Introduce 5.0 mL of the stock solution into a round-bottomed flask and evaporate to dryness under reduced pressure. Take up the residue in 8 mL of a mixture of 10 volumes of *methanol R* and 100 volumes of *anhydrous acetic acid R* and transfer to a 25 mL volumetric flask. Rinse the round-bottomed flask with 3 mL of a mixture of 10 volumes of *methanol R* and 100 volumes of *anhydrous acetic acid R* and transfer to the same 25 mL volumetric flask. Add 10.0 mL of *anhydrous formic acid R* and dilute to 25.0 mL with *anhydrous acetic acid R*.

After 30 min, measure the absorbance (*2.2.25*) of the test solution at 410 nm, by comparison with the compensation liquid.

Calculate the percentage content of total flavonoids, expressed as hyperoside, using the following expression:

$$\frac{A \times 1.235}{m}$$

i.e. taking the specific absorbance of hyperoside to be 405.

A = absorbance at 410 nm;

m = mass of the extract to be examined, in grams.

01/2008:1864

HAWTHORN LEAF AND FLOWER LIQUID EXTRACT, QUANTIFIED

Crataegi folii cum flore extractum fluidum quantificatum

DEFINITION

Quantified liquid extract produced from *Hawthorn leaf with flower (1432)*.

Content: 0.8 per cent to 3.0 per cent of flavonoids, expressed as hyperoside ($C_{21}H_{20}O_{12}$; M_r 464.4).

PRODUCTION

The extract is produced from the herbal drug and ethanol (30 per cent *V/V* to 70 per cent *V/V*) by an appropriate procedure.

IDENTIFICATION

Thin-layer chromatography (*2.2.27*).

Test solution. Dilute 1.0 g in *methanol R* and dilute to 5 mL with the same solvent. Shake and filter.

Reference solution. Dissolve 1.0 mg of *chlorogenic acid R* and 2.5 mg of *hyperoside R* in *methanol R* and dilute to 10 mL with the same solvent.

Plate: *TLC silica gel plate R* (5-40 µm) [or *TLC silica gel plate R* (2-10 µm)].

Mobile phase: *anhydrous formic acid R*, *water R*, *methyl ethyl ketone R*, *ethyl acetate R* (10:10:30:50 *V/V/V/V*).

Application: 20 µL [or 5 µL] as bands.

Development: over a path of 15 cm [or 6 cm].

Drying: at 100-105 °C.

Detection: spray with a 10 g/L solution of *diphenylboric acid aminoethyl ester R* in *methanol R*. Subsequently spray with a 50 g/L solution of *macrogol 400 R* in *methanol R*. Allow the plate to dry in air for about 30 min. Examine in ultraviolet light at 365 nm.

Results: see below the sequence of zones present in the chromatograms obtained with the reference solution and the test solution. Furthermore, other fluorescent zones may be present in the chromatogram obtained with the test solution.

Top of the plate	
———	———
	A yellowish-green fluorescent zone
Hyperoside: a yellowish-orange fluorescent zone	A yellowish-orange fluorescent zone (hyperoside)
Chlorogenic acid: a light blue fluorescent zone	A light blue fluorescent zone (chlorogenic acid)
	A yellowish-green fluorescent zone
———	———
Reference solution	**Test solution**

TESTS

Ethanol (*2.9.10*): 95 per cent *V/V* to 105 per cent *V/V* of the quantity stated on the label.

ASSAY

Stock solution. Dilute about 0.400 g, accurately weighed, in *ethanol (60 per cent V/V) R* and dilute to 100.0 mL with the same solvent.

Test solution. Introduce 5.0 mL of the stock solution into a round-bottomed flask and evaporate to dryness under reduced pressure. Take up the residue with 8 mL of a mixture of 10 volumes of *methanol R* and 100 volumes of *glacial acetic acid R* and transfer into a 25 mL volumetric flask. Rinse the round-bottomed flask with 3 mL of a mixture of 10 volumes of *methanol R* and 100 volumes of *glacial acetic acid R* and transfer into the 25 mL volumetric flask. Add 10.0 mL of a solution containing 25.0 g/L of *boric acid R* and 20.0 g/L of *oxalic acid R* in *anhydrous formic acid R* and dilute to 25.0 mL with *anhydrous acetic acid R*.

Compensation liquid. Introduce 5.0 mL of the stock solution into a round-bottomed flask and evaporate to dryness under reduced pressure. Take up the residue with 8 mL of a mixture of 10 volumes of *methanol R* and 100 volumes of *glacial acetic acid R* and transfer into a 25 mL volumetric flask. Rinse the round-bottomed flask with 3 mL of a mixture of 10 volumes of *methanol R* and 100 volumes of *glacial acetic acid R* and transfer into the 25 mL volumetric flask. Add 10.0 mL of *anhydrous formic acid R* and dilute to 25.0 mL with *anhydrous acetic acid R*.

After 30 min measure the absorbance (*2.2.25*) of the test solution at 410 nm.

Calculate the percentage content of total flavonoids, expressed as hyperoside, from the following expression:

$$\frac{A \times 1.235}{m}$$

i.e. taking the value of the specific absorbance of hyperoside to be 405.

A = absorbance at 410 nm,

m = mass of the extract to be examined, in grams.

01/2011:1222

HOP STROBILE

Lupuli flos

DEFINITION

Dried, generally whole, female inflorescence of *Humulus lupulus* L.

CHARACTERS

Characteristic, aromatic odour.

Herbal drugs

IDENTIFICATION

A. Hop strobiles are generally isolated and 2-5 cm long, petiolate, ovoid, made up of many oval, greenish-yellow, sessile, membranous, overlapping bracts. The external bracts are flattened and symmetrical. The internal bracts are longer and asymmetrical at the base because of a fold generally encircling an induviate fruit (achene). The ovary or rarely the fruit, the base of the bracts and especially the induvial fold, are covered with small orange-yellow glands.

B. Reduce to a powder (355) (*2.9.12*). The powder is greenish-yellow. Examine under a microscope using *chloral hydrate solution R*. The powder shows the following diagnostic characters (Figure 1222.-1): fragments of bracts and bracteoles covered by polygonal, irregular or wavy-walled epidermal cells [D, L, M]; unicellular, conical, straight or curved covering trichomes with thin, smooth walls, fragmented [E, G] or attached to an epidermis [A]; rare anomocytic stomata (*2.8.3*) [K]; glandular trichomes, usually free, with bicellular biseriate stalks and heads consisting of 8 small cells [H, N], rarely attached to an epidermis [La]; fragments of mesophyll containing small calcium oxalate cluster crystals [J]; many characteristic orange-yellow glandular trichomes with short, bicellular biseriate stalks, bearing a part widening into a cup, 150-250 µm in diameter, made up of a hemispherical layer of secretory cells with a cuticle that has been detached and distended by the accumulation of oleoresinous secretions, in surface view [B] or in side view [C]; fragments of elongated sclerenchymatous cells of the testa with thick walls showing striations and numerous pits [F].

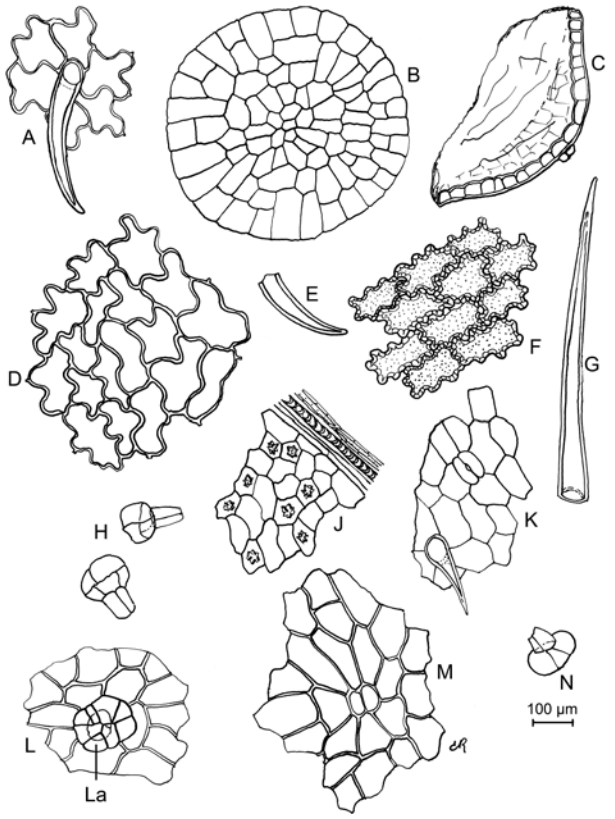

Figure 1222.-1. – *Illustration for identification test B of powdered herbal drug of hop strobile*

C. Thin-layer chromatography (*2.2.27*).

Test solution. To 1.0 g of the freshly powdered herbal drug (355) (*2.9.12*) add 10 mL of a mixture of 3 volumes of *water R* and 7 volumes of *methanol R*; shake for 15 min and filter.

Reference solution. Dissolve 1.0 mg of *Sudan orange R*, 2.0 mg of *curcumin R* and 2.0 mg of *dimethylaminobenzaldehyde R* in 20 mL of *methanol R*.

Plate: *TLC silica gel F_{254} plate R*.

Mobile phase: *anhydrous acetic acid R*, *ethyl acetate R*, *cyclohexane R* (2:38:60 *V/V/V*).

Application: 20 µL as bands.

Development: over a path of 15 cm.

Drying: in air.

Detection A: examine in ultraviolet light at 254 nm.

Results A: the chromatogram obtained with the reference solution shows 3 quenching zones; in the lower quarter is the faint zone due to curcumin, somewhat below the middle is the zone due to dimethylaminobenzaldehyde, and above, the zone due to Sudan orange. The chromatogram obtained with the test solution shows a number of quenching zones similar in position to the zones in the chromatogram obtained with the reference solution: at about the level of the zone due to curcumin is a faint zone due to xanthohumol, near the level of the zone due to dimethylaminobenzaldehyde are zones due to humulones, and near the level of the zone due to Sudan orange are zones due to lupulones.

Detection B: examine in ultraviolet light at 365 nm.

Results B: in the chromatogram obtained with the test solution the zones due to lupulones show blue fluorescence, the zones due to humulones show brown fluorescence and the zone due to xanthohumol shows dark brown fluorescence.

Detection C: spray with *dilute phosphomolybdotungstic reagent R*; expose to ammonia vapour and examine in daylight.

Results C: in the chromatogram obtained with the test solution the zones due to humulones and to lupulones are bluish-grey and the zone due to xanthohumol is greenish-grey; in the chromatogram obtained with the reference solution the zones are bluish-grey or brownish-grey.

TESTS

Matter extractable by ethanol (70 per cent *V/V*): minimum 25.0 per cent.

To 10.0 g of the powdered herbal drug (355) (*2.9.12*) add 300 mL of *ethanol (70 per cent V/V) R* and heat for 10 min on a water-bath under a reflux condenser. Allow to cool, filter, and discard the first 10 mL of the filtrate. Evaporate 30.0 mL of the filtrate to dryness on a water-bath and dry in an oven at 100-105 °C for 2 h. The residue weighs a minimum of 0.250 g.

Loss on drying (*2.2.32*): maximum 10.0 per cent, determined on 1.000 g of the powdered herbal drug (355) (*2.9.12*) by drying in an oven at 105 °C for 2 h.

Total ash (*2.4.16*): maximum 12.0 per cent.

07/2010:1439

ICELAND MOSS

Lichen islandicus

DEFINITION

Whole or cut, dried thallus of *Cetraria islandica* (L.) Acharius s.l.

IDENTIFICATION

A. The thallus, up to 15 cm long, is irregularly dichotomous and consists of glabrous, groove-shaped or almost flat, stiff, brittle bands, 0.3-1.5 cm wide and about 0.5 mm thick, sometimes serrated with the margin ciliated (pycnidia). The upper surface is greenish or greenish-brown, the lower surface is greyish-white light brownish and shows whitish, depressed spots (so-called respiratory cavities). On the apices of the terminal very rarely, there are brown, discoid apothecia.

Herbal drugs

B. Reduce to a powder (355) (*2.9.12*). The powder is greyish-brown. Examine under a microscope, using *chloral hydrate solution R*. The powder shows the following diagnostic characters: numerous fragments of the pseudoparenchyma consisting of narrow-lumened, thick-walled hyphae from the marginal layer and wide-lumened hyphae from the adjacent layer consisting of loosely entwined hyphae, in which, in the medullary zone, greenish or brownish algae cells up to 15 µm in diameter, are embedded; occasionally marginal fragments of the thallus with tube-like or cylindrical spermogonia, up to about 160 µm wide and up to about 400 µm long.

C. To 1.0 g of the powdered herbal drug (355) (*2.9.12*) add 10 mL of *water R* and boil for 2-3 min. The greyish-brown solution forms a gel after cooling which gives a blue colour with *iodine solution R*.

D. Thin-layer chromatography (*2.2.27*).

Test solution. To 1.0 g of the powdered herbal drug (355) (*2.9.12*) add 5 mL of *acetone R* and heat in a water-bath under a reflux condenser for 2-3 min. Cool and filter.

Reference solution. Dissolve 5 mg of *anethole R* and 5 mg of *caffeic acid R* in 2 mL of *acetone R*.

Plate: *TLC silica gel plate R* (5-40 µm) [or *TLC silica gel plate R* (2-10 µm)].

Mobile phase: *acetone R*, *methanol R*, *anhydrous formic acid R*, *toluene R* (5:5:10:80 *V/V/V/V*).

Application: 20 µL [or 4 µL] of the test solution and 10 µL [or 2 µL] of the reference solution, as bands.

Development: over a path of 10 cm [or 6 cm].

Drying: in air.

Detection: spray with *anisaldehyde solution R*. Heat at 100-105 °C for 5-10 min and examine in daylight.

Results: see below the sequence of zones present in the chromatograms obtained with the reference solution and the test solution. Furthermore, other faint zones may be present in the chromatogram obtained with the test solution.

Top of the plate	
	A greyish-blue zone
Anethole: a blue or bluish-violet zone	
———	———
	2 weak greyish-blue zones
	A weak greyish-brown or grey zone
———	———
	A greyish-violet zone
Caffeic acid: a greyish-blue zone	
Reference solution	**Test solution**

TESTS

Foreign matter (*2.8.2*): maximum 5 per cent.

Lead (*2.4.27*): maximum 10.0 ppm.

Loss on drying (*2.2.32*): maximum 12.0 per cent, determined on 1.000 g of the powdered herbal drug (355) (*2.9.12*) by drying in an oven at 105 °C for 2 h.

Total ash (*2.4.16*): maximum 3.0 per cent.

Swelling index (*2.8.4*): minimum 4.5, determined on the powdered herbal drug (355) (*2.9.12*).

01/2013:2310

INDIAN FRANKINCENSE

Olibanum indicum

DEFINITION

Air-dried gum-resin exudate, obtained by incision in the stem or branches of *Boswellia serrata* Roxb. ex Colebr.

Content:

– *11-keto-β-boswellic acid* ($C_{30}H_{46}O_4$; M_r 470.7): minimum 1.0 per cent (dried drug);

– *acetyl-11-keto-β-boswellic acid* ($C_{32}H_{48}O_5$; M_r 512.7): minimum 1.0 per cent (dried drug).

IDENTIFICATION

A. Indian frankincense consists of translucent, roundish or irregularly shaped, variable size pieces of up to 3 cm. They are yellowish or reddish-brown. Their surface is covered with grey dust. The fracture is dull or slightly glossy.

B. Thin-layer chromatography (*2.2.27*).

Test solution. To 1.0 g of the powdered herbal drug (355) (*2.9.12*) add 90 mL of *methanol R* and sonicate for 10 min. Shake the mixture vigorously 3 or 4 times during this procedure. Dilute to 100 mL with *methanol R*. Centrifuge and use the clear supernatant solution.

Reference solution. Dissolve 2 mg of *11-keto-β-boswellic acid R* and 2 mg of *acetyl-11-keto-β-boswellic acid R* in 20 mL of *methanol R*.

Plate: *TLC silica gel F_{254} plate R* (5-40 µm) [or *TLC silica gel F_{254} plate R* (2-10 µm)].

Mobile phase: *anhydrous formic acid R*, *heptane R*, *ethyl acetate R*, *toluene R* (3:10:20:80 *V/V/V/V*).

Application: 10 µL [or 3 µL] as bands.

Development: over a path of 8 cm [or 6 cm].

Drying: in air.

Detection: examine in ultraviolet light at 254 nm.

Results: see below the sequence of zones present in the chromatograms obtained with the reference solution and the test solution. The zones due to 11-keto-β-boswellic acid and acetyl-11-keto-β-boswellic acid in the test solution are of approximately equivalent intensity. Furthermore, other weak quenching zones may be present in the chromatogram obtained with the test solution.

Top of the plate	
———	———
———	———
Acetyl-11-keto-β-boswellic acid: a quenching zone	A quenching zone (acetyl-11-keto-β-boswellic acid)
11-Keto-β-boswellic acid: a quenching zone	A quenching zone (11-keto-β-boswellic acid)
Reference solution	**Test solution**

TESTS

Loss on drying (*2.2.32*): maximum 8.0 per cent, determined on 1.000 g of the powdered herbal drug (355) (*2.9.12*) by drying in an oven at 105 °C for 3 h.

Total ash (*2.4.16*): maximum 10.0 per cent.

ASSAY

Liquid chromatography (*2.2.29*).

Test solution. To 1.0 g of the powdered herbal drug (355) (*2.9.12*) add 90 mL of *methanol R* and sonicate for 10 min. Shake the mixture vigorously 3 or 4 times during this procedure. Dilute to 100.0 mL with *methanol R*. Centrifuge

Herbal drugs

for 5 min. Dilute 1.0 mL of the clear solution to 10.0 mL with a mixture of 16 volumes of mobile phase A and 84 volumes of mobile phase B.

Reference solution. Dissolve 1.0 mg of *11-keto-β-boswellic acid R* and 1.0 mg of *acetyl-11-keto-β-boswellic acid R* in 20.0 mL of *methanol R*. Dilute 1.0 mL of this solution to 10.0 mL with a mixture of 16 volumes of mobile phase A and 84 volumes of mobile phase B.

Column:

- *size*: *l* = 0.25 m, Ø = 4.6 mm;
- *stationary phase*: *octadecylsilyl silica gel for chromatography R* (5 µm).

Mobile phase:

- *mobile phase A*: *phosphoric acid R*, *water R* (0.1:99.9 *V/V*);
- *mobile phase B*: *phosphoric acid R*, *acetonitrile R* (0.1:99.9 *V/V*);

Time (min)	Mobile phase A (per cent *V/V*)	Mobile phase B (per cent *V/V*)
0 - 12.5	16 → 6	84 → 94
12.5 - 13.5	6 → 0	94 → 100
13.5 - 28	0	100

Flow rate: 1.0 mL/min.

Detection: spectrophotometer at 250 nm.

Injection: 20 µL.

Retention time: 11-keto-β-boswellic acid = about 8 min; acetyl-11-keto-β-boswellic acid = about 12 min.

System suitability: reference solution:

- *resolution*: minimum 6.0 between the peaks due to 11-keto-β-boswellic acid and acetyl-11-keto-β-boswellic acid.

Calculate the percentage content of 11-keto-β-boswellic acid using the following expression:

$$\frac{A_1 \times m_1 \times 5 \times p_1}{A_2 \times m}$$

A_1 = area of the peak due to 11-keto-β-boswellic acid in the chromatogram obtained with the test solution;

A_2 = area of the peak due to 11-keto-β-boswellic acid in the chromatogram obtained with the reference solution;

m = mass of the substance to be examined, in grams;

m_1 = mass of *11-keto-β-boswellic acid R* in the reference solution, in grams;

p_1 = percentage content of 11-keto-β-boswellic acid in *11-keto-β-boswellic acid R*.

Calculate the percentage content of acetyl-11-keto-β-boswellic acid using the following expression:

$$\frac{A_3 \times m_2 \times 5 \times p_2}{A_4 \times m}$$

A_3 = area of the peak due to acetyl-11-keto-β-boswellic acid in the chromatogram obtained with the test solution;

A_4 = area of the peak due to acetyl-11-keto-β-boswellic acid in the chromatogram obtained with the reference solution;

m = mass of the substance to be examined, in grams;

m_2 = mass of *acetyl-11-keto-β-boswellic acid R* in the reference solution, in grams;

p_2 = percentage content of acetyl-11-keto-β-boswellic acid in *acetyl-11-keto-β-boswellic acid R*.

01/2008:1875

IPECACUANHA LIQUID EXTRACT, STANDARDISED

Ipecacuanhae extractum fluidum normatum

DEFINITION

Standardised liquid extract produced from *Ipecacuanha root (0094)*.

Content: 1.80 per cent to 2.20 per cent of total alkaloids, calculated as emetine ($C_{29}H_{40}N_2O_4$; M_r 480.7).

PRODUCTION

The extract is produced from the herbal drug and ethanol (60 to 80 per cent *V/V*) by an appropriate procedure.

CHARACTERS

Appearance: dark brown liquid.

IDENTIFICATION

Thin-layer chromatography (*2.2.27*).

Test solution. Dilute 5.0 mL of the extract to be examined to 50 mL with *ethanol (70 per cent V/V) R*. To 2.0 mL of this solution add 2 mL of *water R* and 0.1 mL of *concentrated ammonia R*. Add 10 mL of *ether R* and shake. Separate the upper layer, dry it over about 2 g of *anhydrous sodium sulfate R* and filter.

Reference solution. Dissolve 2.5 mg of *emetine hydrochloride CRS* and 3 mg of *cephaeline hydrochloride CRS* in *methanol R* and dilute to 10 mL with the same solvent.

Plate: *TLC silica gel plate R*.

Mobile phase: *concentrated ammonia R*, *methanol R*, *ethyl acetate R*, *toluene R* (2:15:18:65 *V/V/V/V*).

Application: 10 µL as bands.

Development: over a path of 10 cm.

Drying: in air.

Detection A: spray with a 5 g/L solution of *iodine R* in *ethanol (96 per cent) R*. Heat at 60 °C for 10 min and allow to cool for 30 min. Examine in daylight.

Results A: see below the sequence of the zones present in the chromatograms obtained with the reference solution and the test solution. Furthermore, other zones may be present in the chromatogram obtained with the test solution.

Top of the plate	
———	———
———	———
Emetine: a yellow zone	A yellow zone (emetine)
Cephaeline: a light brown zone	A light brown zone (cephaeline)
Reference solution	**Test solution**

Detection B: examine the plate in ultraviolet light at 365 nm.

Results B: see below the sequence of the zones present in the chromatograms obtained with the reference solution and the test solution. Furthermore, other faint fluorescent zones are present in the chromatogram obtained with the test solution.

Top of the plate	
———	———
———	———
Emetine: an intense yellow fluorescent zone	An intense yellow fluorescent zone (emetine) A light blue fluorescent zone (cephaeline)
Reference solution	**Test solution**

Herbal drugs

With a liquid extract from *Cephaelis acuminata* root, the zones of emetine and cephaeline in the chromatogram obtained with the test solution are of similar size.

With a liquid extract from *Cephaelis ipecacuanha* root, the zone of emetine is much larger than the zone of cephaeline in the chromatogram obtained with the test solution.

TESTS

Ethanol (*2.9.10*): 95 per cent to 105 per cent of the quantity stated on the label.

ASSAY

Dilute 1.00 g of the extract to be examined to 10 mL with *ethanol (70 per cent V/V) R* and transfer to a chromatography column about 0.2 m long and about 15 mm in internal diameter, containing 8 g of *basic aluminium oxide R*, using a glass rod. After infiltration into the aluminium oxide layer, rinse the flask, glass rod and internal wall of the column with 3 quantities, each of 2 mL, of *ethanol (70 per cent V/V) R*. Elute in portions with 40 mL of *ethanol (70 per cent V/V) R*. Avoid disturbance or drying of the surface of the aluminium oxide layer. Collect the whole of the eluate. Evaporate the eluate on a water-bath to about 10 mL. Allow to cool. Add 10.0 mL of *0.02 M hydrochloric acid* and 20 mL of *carbon dioxide-free water R*. Titrate the excess acid with *0.02 M sodium hydroxide* using 0.15 mL of *methyl red mixed solution R* as indicator.

Perform a blank assay by replacing the extract to be examined with 10.0 mL of alcohol of the strength stated on the label.

1 mL of *0.02 M hydrochloric acid* is equivalent to 4.807 mg of total alkaloids, calculated as emetine.

01/2008:0093

IPECACUANHA, PREPARED

Ipecacuanhae pulvis normatus

DEFINITION

Ipecacuanha root powder (180) (*2.9.12*) adjusted, if necessary, by the addition of powdered lactose or ipecacuanha root powder with a lower alkaloidal content.

Content: 1.9 per cent to 2.1 per cent of total alkaloids, expressed as emetine ($C_{29}H_{40}N_2O_4$; M_r 480.7) (dried drug).

CHARACTERS

Appearance: light grey or yellowish-brown powder.

Slight odour.

IDENTIFICATION

A. Examine under a microscope, using *chloral hydrate solution R*. The powder shows the following diagnostic characters: parenchymatous cells, raphides of calcium oxalate up to 80 µm in length either in bundles or scattered throughout the powder; fragments of tracheids and vessels usually 10-20 µm in diameter, with bordered pits; larger vessels and sclereids from the rhizome. Examine under a microscope using a 50 per cent *V/V* solution of *glycerol R*. The powder shows simple or 2-8-compound starch granules contained in parenchymatous cells, the simple granules being up to 15 µm in diameter in *Cephaelis ipecacuanha* and up to 22 µm in diameter in *C. acuminata*. Examined in *glycerol (85 per cent) R*, it may be seen to contain lactose crystals.

B. Thin-layer chromatography (*2.2.27*).

Test solution. To 0.1 g of the drug to be examined in a test-tube add 0.05 mL of *concentrated ammonia R* and 5 mL of *ether R* and stir the mixture vigorously with a glass rod. Allow to stand for 30 min and filter.

Reference solution. Dissolve 2.5 mg of *emetine hydrochloride CRS* and 3 mg of *cephaeline hydrochloride CRS* in *methanol R* and dilute to 20 mL with the same solvent.

Plate: *TLC silica gel plate R*.

Mobile phase: *concentrated ammonia R*, *methanol R*, *ethyl acetate R*, *toluene R* (2:15:18:65 *V/V/V/V*).

Application: 10 µL, as bands.

Development: over a path of 10 cm.

Drying: in air.

Detection A: spray with a 5 g/L solution of *iodine R* in *ethanol (96 per cent) R*; heat at 60 °C for 10 min and examine in daylight.

Results A: the chromatograms obtained with the test solution and the reference solution show in the lower part a yellow zone due to emetine and below it a light brown zone due to cephaeline.

Detection B: examine in ultraviolet light at 365 nm.

Results B: the zone due to emetine shows an intense yellow fluorescence and that due to cephaeline a light blue fluorescence. The chromatogram obtained with the test solution also shows faint fluorescent zones.

With prepared *C. acuminata*, the principal zones in the chromatogram obtained with the test solution are similar in position, fluorescence and size to the zones in the chromatogram obtained with the reference solution.

With prepared *C. ipecacuanha*, the only difference is that the zone due to cephaeline in the chromatogram obtained with the test solution is much smaller than the corresponding zone in the chromatogram obtained with the reference solution.

TESTS

Loss on drying (*2.2.32*): maximum 5.0 per cent, determined on 1.000 g by drying in an oven at 105 °C.

Total ash (*2.4.16*): maximum 5.0 per cent.

Ash insoluble in hydrochloric acid (*2.8.1*): maximum 3.0 per cent.

ASSAY

To 7.5 g in a dry flask, add 100 mL of *ether R* and shake for 5 min. Add 5 mL of *dilute ammonia R1*, shake for 1 h, add 5 mL of *water R* and shake vigorously. Decant the ether layer into a flask through a plug of cotton. Wash the residue in the flask with 2 quantities, each of 25 mL, of *ether R*, decanting each portion through the same plug of cotton. Combine the ether solutions and eliminate the ether by distillation. Dissolve the residue in 2 mL of *ethanol (90 per cent V/V) R*, evaporate the ethanol to dryness and heat at 100 °C for 5 min. Dissolve the residue in 5 mL of previously neutralised *ethanol (90 per cent V/V) R*, warming on a water-bath, add 15.0 mL of *0.1 M hydrochloric acid* and titrate the excess acid with *0.1 M sodium hydroxide* using 0.5 mL of *methyl red mixed solution R* as indicator.

1 mL of *0.1 M hydrochloric acid* is equivalent to 24.03 mg of total alkaloids, expressed as emetine.

STORAGE

In an airtight container.

01/2008:0094
corrected 6.0

IPECACUANHA ROOT

Ipecacuanhae radix

DEFINITION

Fragmented and dried underground organs of *Cephaelis ipecacuanha* (Brot.) A. Rich., known as Matto Grosso ipecacuanha, or of *Cephaelis acuminata* Karsten, known as Costa Rica ipecacuanha, or of a mixture of both species. The principal alkaloids are emetine and cephaeline.

Herbal drugs

Content: minimum 2.0 per cent of total alkaloids, expressed as emetine ($C_{29}H_{40}N_2O_4$; M_r 480.7) (dried drug).

CHARACTERS

Slight odour.

IDENTIFICATION

A. *C. ipecacuanha.* The root occurs as somewhat tortuous pieces, dark reddish-brown or very dark brown, seldom more than 15 cm long or 6 mm thick, closely annulated externally, having rounded ridges completely encircling the root; the fracture is short in the bark and splintery in the wood. The transversely cut surface shows a wide greyish bark and a small uniformly dense wood. The rhizome occurs as short lengths usually attached to roots, cylindrical, up to 2 mm in diameter, finely wrinkled longitudinally and with pith occupying approximately one-sixth of the whole diameter.

C. acuminata. The root in general resembles the root of *C. ipecacuanha*, but differs in the following particulars: it is often up to 9 mm thick; the external surface is greyish-brown or reddish-brown with transverse ridges at intervals of usually 1-3 mm, the ridges being about 0.5-1 mm wide, extending about half-way round the circumference and fading at the extremities into the general surface level.

B. Reduce to a powder (355) (*2.9.12*). The powder is light grey or yellowish-brown. Examine under a microscope, using *chloral hydrate solution R*. The powder shows the following diagnostic characters: parenchymatous cells, raphides of calcium oxalate up to 80 µm in length either in bundles or scattered throughout the powder; fragments of tracheids and vessels usually 10-20 µm in diameter, with bordered pits; larger vessels and sclereids from the rhizome. Examine under a microscope using a 50 per cent *V/V* solution of *glycerol R*. The powder shows simple or two- to eight-compound starch granules contained in parenchymatous cells, the simple granules being up to 15 µm in diameter in *C. ipecacuanha* and up to 22 µm in diameter in *C. acuminata*.

C. Thin-layer chromatography (*2.2.27*).

Test solution. To 0.1 g of the powdered herbal drug (180) (*2.9.12*) in a test-tube add 0.05 mL of *concentrated ammonia R* and 5 mL of *ether R* and stir the mixture vigorously with a glass rod. Allow to stand for 30 min and filter.

Reference solution. Dissolve 2.5 mg of *emetine hydrochloride CRS* and 3 mg of *cephaeline hydrochloride CRS* in *methanol R* and dilute to 20 mL with the same solvent.

Plate: *TLC silica gel plate R.*

Mobile phase: *concentrated ammonia R*, *methanol R*, *ethyl acetate R*, *toluene R* (2:15:18:65 *V/V/V/V*).

Application: 10 µL, as bands.

Development: over a path of 10 cm.

Drying: in air.

Detection A: spray with a 5 g/L solution of *iodine R* in *ethanol (96 per cent) R* and heat at 60 °C for 10 min. Examine in daylight.

Results A: the chromatograms obtained with the test solution and with the reference solution show in the lower part a yellow zone due to emetine and below a light brown zone due to cephaeline.

Detection B: examine in ultraviolet light at 365 nm.

Results B: the zone due to emetine shows an intense yellow fluorescence and that due to cephaeline a light blue fluorescence. The chromatogram obtained with the test solution shows also faint fluorescent zones.

With *C. acuminata* the principal zones in the chromatogram obtained with the test solution are similar in position, fluorescence and size to the zones in the chromatogram obtained with the reference solution.

With *C. ipecacuanha* the only difference is that the zone due to cephaeline in the chromatogram obtained with the test solution is much smaller than the corresponding zone in the chromatogram obtained with the reference solution.

TESTS

Loss on drying (*2.2.32*): maximum 10.0 per cent, determined on 1.000 g of the powdered herbal drug (180) (*2.9.12*) by drying in an oven at 105 °C.

Total ash (*2.4.16*): maximum 5.0 per cent.

Ash insoluble in hydrochloric acid (*2.8.1*): maximum 3.0 per cent.

ASSAY

To 7.5 g of the powdered herbal drug (180) (*2.9.12*) in a dry flask, add 100 mL of *ether R* and shake for 5 min. Add 5 mL of *dilute ammonia R1*, shake for 1 h. Add 5 mL of *water R* and shake vigorously. Decant the ether layer into a flask through a plug of cotton. Wash the residue in the flask with 2 quantities, each of 25 mL, of *ether R*, decanting each portion through the same plug of cotton. Combine the ether solutions and eliminate the ether by distillation. Dissolve the residue in 2 mL of *ethanol (90 per cent V/V) R*, evaporate to dryness and heat at 100 °C for 5 min. Dissolve the residue in 5 mL of previously neutralised *ethanol (90 per cent V/V) R*, warming on a water-bath. Add 15.0 mL of *0.1 M hydrochloric acid* and titrate the excess acid with *0.1 M sodium hydroxide* using 0.5 mL of *methyl red mixed solution R* as indicator.

1 mL of *0.1 M hydrochloric acid* is equivalent to 24.03 mg of total alkaloids, expressed as emetine.

STORAGE

Protected from moisture.

01/2008:1530

IPECACUANHA TINCTURE, STANDARDISED

Ipecacuanhae tinctura normata

DEFINITION

Tincture produced from *Ipecacuanha root (0094)*.

Content: 0.18 per cent *m/m* to 0.22 per cent *m/m* of total alkaloids, calculated as emetine ($C_{29}H_{40}N_2O_4$; M_r 480.7).

PRODUCTION

The tincture is produced from the herbal drug and ethanol (70 per cent *V/V*) by an appropriate procedure.

CHARACTERS

Appearance: yellowish-brown liquid.

IDENTIFICATION

Thin-layer chromatography (*2.2.27*).

Test solution. To 2.0 mL of the tincture to be examined add 2 mL of *water R* and 0.1 mL of *concentrated ammonia R*. Add 10 mL of *ether R* and shake. Separate the ether layer, dry it over about 2 g of *anhydrous sodium sulfate R* and filter.

Reference solution. Dissolve 2.5 mg of *emetine hydrochloride CRS* and 3 mg of *cephaeline hydrochloride CRS* in *methanol R* and dilute to 10 mL with the same solvent.

Plate: *TLC silica gel plate R.*

Mobile phase: *concentrated ammonia R*, *methanol R*, *ethyl acetate R*, *toluene R* (2:15:18:65 *V/V/V/V*).

Application: 10 µL as bands.

Herbal drugs

Development: over a path of 10 cm.

Drying: in air.

Detection A: spray with a 5 g/L solution of *iodine R* in *ethanol (96 per cent) R* and heat at 60 °C for 10 min. Examine in daylight.

Results A: see below the sequence of zones present in the chromatograms obtained with the reference solution and the test solution.

Top of the plate	
———	———
———	———
Emetine: a yellow zone	A yellow zone (emetine)
Cephaeline: a light brown zone	A light brown zone (cephaeline)
Reference solution	**Test solution**

Detection B: examine the plate in ultraviolet light at 365 nm.

Results B: see below the sequence of zones present in the chromatograms obtained with the reference solution and the test solution. Furthermore, other faint fluorescent zones are present in the chromatogram obtained with the test solution.

Top of the plate	
———	———
———	———
Emetine: an intense yellow fluorescent zone	An intense yellow fluorescent zone (emetine) A light blue fluorescent zone (cephaeline)
Reference solution	**Test solution**

With a tincture from *Cephaelis acuminata* root, the zones of emetine and cephaeline in the chromatogram obtained with the test solution are similar in size.

With a tincture from *Cephaelis ipecacuanha* root, the zone of emetine is much larger than the zone of cephaeline in the chromatogram obtained with the test solution.

TESTS

Ethanol (*2.9.10*): 95 per cent to 105 per cent of the quantity stated on the label.

ASSAY

Transfer 10.00 g of the tincture to be examined to a chromatography column about 0.2 m long and about 15 mm in internal diameter, filled with 8 g of *basic aluminium oxide R*. After infiltration into the aluminium oxide layer rinse the internal wall of the column with 3 quantities, each of 2 mL, of *ethanol (70 per cent V/V) R*. Elute in portions, with 40 mL of *ethanol (70 per cent V/V) R*. Avoid whirling or drying of the surface of the aluminium oxide layer. Collect the whole of the eluate. Evaporate the eluate on a water-bath to about 10 mL. Allow to cool. Add 10.0 mL of *0.02 M hydrochloric acid* and 20 mL of *carbon dioxide-free water R*. Titrate the excess acid with *0.02 M sodium hydroxide* using 0.15 mL of *methyl red mixed solution R* as indicator.

Perform a blank assay replacing the tincture to be examined with 10.0 mL of alcohol of the strength stated on the label.

1 mL of *0.02 M hydrochloric acid* is equivalent to 4.807 mg of total alkaloids, calculated as emetine.

01/2012:2566
corrected 7.6

ISATIS ROOT

Isatidis radix

DEFINITION

Dried root of *Isatis tinctoria* L. (*I. indigotica* Fortune) collected in autumn.

Content: minimum 1.0 per cent of arginine ($C_6H_{14}N_4O_2$; M_r 174.2) (dried drug).

IDENTIFICATION

A. The root is cylindrical, slightly tortuous, 10-20 cm long, 0.5-1 cm in diameter, externally greyish-yellow or brownish-yellow, wrinkled longitudinally and lenticellate transversally, with rootlets or rootlet scars. Root stock slightly expanded, exhibiting dark green or dark brown petiole bases arranged in whorls, and dense tubercles. The fracture is yellowish-white, brown or dark brown in bark and yellow or brown in wood.

B. Microscopic examination (*2.8.23*). The powder is whitish-yellow or yellow. Examine under a microscope using *chloral hydrate solution R*. The powder shows the following diagnostic characters: fragments of cork consisting of 5-8 thin-walled layers; fragments of xylem with reticulate structure; thin-walled, rounded parenchyma cells. Examine under a microscope using a 50 per cent *V/V* solution of *glycerol R*. The powder shows abundant, single or compound (2, 3 or 4) starch grains. The starch grains, 1.5-3.4 µm in diameter, with spot, cleft or V-shaped hilum.

C. Thin-layer chromatography (*2.2.27*).

Test solution. To 0.5 g of the powdered herbal drug (355) (*2.9.12*) add 5 mL of *ethanol (70 per cent V/V) R* and sonicate for 10 min. Centrifuge and use the supernatant.

Reference solution. Dissolve 4 mg of *arginine R* and 4 mg of *cysteine hydrochloride R* in 1 mL of *ethanol (70 per cent V/V) R*.

Plate: *TLC silica gel F_{254} plate R* (5-40 µm) [or *TLC silica gel F_{254} plate R* (2-10 µm)].

Mobile phase: *anhydrous formic acid R*, *water R*, *acetonitrile R* (2:8:30 *V/V/V*).

Application: 4 µL as bands of 10 mm [or 8 mm].

Development: over a path of 8.5 cm [or 6 cm].

Drying: in air.

Detection: expose to *concentrated ammonia R* vapour for 5 min, treat with *ninhydrin solution R4*, then heat at 120 °C for 3 min.

Results: see below the sequence of zones present in the chromatograms obtained with the reference solution and the test solution. Furthermore, other faint coloured zones may be present in the chromatogram obtained with the test solution.

Top of the plate	
———	———
———	———
	A prominent brown zone
Cysteine: a brown zone	
	A brown zone
Arginine: a brown zone	A brown zone (arginine)
	A faint brown zone
Reference solution	**Test solution**

Herbal drugs

TESTS

Loss on drying (*2.2.32*): maximum 9.0 per cent, determined on 1.000 g of the powdered herbal drug (355) (*2.9.12*) by drying in an oven at 105 °C for 2 h.

Total ash (*2.4.16*): maximum 5.0 per cent.

Ash insoluble in hydrochloric acid (*2.8.1*): maximum 1.0 per cent.

ASSAY

Liquid chromatography (*2.2.29*).

Test solution. To 0.100 g of the powdered herbal drug (355) (*2.9.12*) add 20 mL of *ethanol (70 per cent V/V) R*, sonicate for 20 min, filter, and evaporate the filtrate to dryness. Dissolve the residue in *ethanol (70 per cent V/V) R* and dilute to 10.0 mL with the same solvent.

Reference solution (a). Dissolve 25.0 mg of *arginine CRS* in *ethanol (70 per cent V/V) R* and dilute to 50.0 mL with the same solvent.

Reference solution (b). Dissolve 3.0 mg of *cysteine hydrochloride R* in 6.0 mL of reference solution (a) and dilute to 10.0 mL with *ethanol (70 per cent V/V) R*.

Reference solutions (c), (d), (e), (f), (g), (h). Dilute reference solution (a) to obtain 6 reference solutions of arginine, the concentrations of which span the expected value in the test solution.

Column:

- *size*: *l* = 0.15 m, Ø = 4.6 mm;
- *stationary phase*: *end-capped octadecylsilyl silica gel for chromatography R* (3 µm);
- *temperature*: 30 °C.

Mobile phase: *trifluoroacetic acid R*, *water R* (0.2:99.8 *V/V*).

Flow rate: 0.2 mL/min.

Detection: evaporative light-scattering detector; the following settings have been found to be suitable; if the detector has different setting parameters, adjust the detector settings so as to comply with the system suitability criterion for the signal-to-noise ratio:

- *carrier gas*: *nitrogen R*;
- *pressure*: 330 kPa;
- *evaporator temperature*: 80 °C.

Injection: 10 µL.

Run time: 25 min.

System suitability:

- *resolution*: minimum 1.5 between the peaks due to cysteine and arginine in the chromatogram obtained with reference solution (b);
- *signal-to-noise ratio*: minimum 50 for the peak due to arginine in the chromatogram obtained with reference solution (a).

Establish a calibration curve with the logarithm of the concentration (in milligrams per 10 mL) of reference solutions (c), (d), (e), (f), (g) and (h) (corrected by the assigned percentage content of *arginine CRS*) as the abscissa and the logarithm of the corresponding peak areas as the ordinate.

Calculate the percentage content of arginine using the following expression:

$$\frac{10^{A}}{m \times 10}$$

A = logarithm of the concentration of arginine in the test solution, determined from the calibration curve;

m = mass of the herbal drug to be examined used to prepare the test solution, in grams.

01/2008:1334
corrected 6.0

ISPAGHULA HUSK

Plantaginis ovatae seminis tegumentum

DEFINITION

Episperm and collapsed adjacent layers removed from the seeds of *Plantago ovata* Forssk. (*P. ispaghula* Roxb.).

IDENTIFICATION

A. The husk consists of pinkish-beige fragments or flakes up to about 2 mm long and 1 mm wide, some showing a light brown spot corresponding to the location of the embryo before it was removed from the seed.

B. Reduce to a powder (355) (*2.9.12*). The powder is pale yellow. Examine under a microscope using *lactic reagent R*. The powder shows the following diagnostic characters: mainly fragments of the episperm with polygonal cells filled with mucilage; fragments of the inner layers of the testa with brownish thin-walled cells often associated with the outer layers of the endosperm. Examine under a microscope using a 50 per cent *V/V* solution of *glycerol R*. The powder shows occasional starch granules, single or in groups of 2-4, measuring 3-25 µm in diameter.

C. Thin-layer chromatography (*2.2.27*).

Test solution. To 10 mg of the powdered herbal drug (355) (*2.9.12*) in a thick-walled centrifuge tube, add 2 mL of a 230 g/L solution of *trifluoroacetic acid R* and shake vigorously. Stopper the test tube and heat at 120 °C for 1 h. Centrifuge the hydrolysate, transfer the clear supernatant into a 50 mL flask, add 10 mL of *water R* and evaporate to dryness under reduced pressure. Take up the residue in 10 mL of *water R* and evaporate again to dryness under reduced pressure. Take up the residue with 2 mL of *methanol R*.

Reference solution (a). Dissolve 10 mg of *arabinose R* in a small quantity of *water R* and dilute to 10 mL with *methanol R*.

Reference solution (b). Dissolve 10 mg of *xylose R* in a small quantity of *water R* and dilute to 10 mL with *methanol R*.

Reference solution (c). Dissolve 10 mg of *galactose R* in a small quantity of *water R* and dilute to 10 mL with *methanol R*.

Plate: *TLC silica gel plate R*.

Mobile phase: *water R*, *acetonitrile R* (15:85 *V/V*).

Application: 10 µL, as bands.

Development: over a path of 15 cm.

Detection: spray with *aminohippuric acid reagent R* and heat at 120 °C for 5 min; examine in daylight.

Results: the chromatogram obtained with the test solution shows 2 orange-pink zones (arabinose and xylose) and a yellow zone (galactose) similar in position and colour to the zones in the chromatograms obtained with the reference solutions.

TESTS

Foreign matter (*2.8.2*). Carry out the determination using 5.0 g.

Loss on drying (*2.2.32*): maximum 12.0 per cent, determined on 1.000 g of the powdered herbal drug (355) (*2.9.12*) by drying in an oven at 105 °C for 2 h.

Total ash (*2.4.16*): maximum 4.0 per cent.

Swelling index (*2.8.4*): minimum 40, determined on 0.1 g of the powdered herbal drug (355) (*2.9.12*).

01/2008:1333
corrected 6.0

ISPAGHULA SEED

Plantaginis ovatae semen

DEFINITION

Dried ripe seeds of *Plantago ovata* Forssk. (*P. ispaghula* Roxb.).

IDENTIFICATION

A. Ispaghula seed is pinkish-beige, smooth, boat-shaped and curved. It is 1.5 mm to 3.5 mm long, 1.5 mm to 2 mm wide and 1 mm to 1.5 mm thick. The concave surface shows in the centre a light coloured spot corresponding to the hilum. The convex surface shows a light brown spot corresponding to the location of the embryo and takes up about one quarter of the length of the seed.

B. Reduce to a powder (355) (*2.9.12*). The powder is pale brown. Examine under a microscope using *lactic reagent R*. The powder shows mainly fragments of the episperm with polygonal cells filled with mucilage; fragments of the inner layers of the testa with brownish thin-walled cells often associated with the outer layers of the endosperm; fragments of the endosperm with cells with thick cellulose walls containing aleurone grains and oil droplets; a few fragments of embryo with thin-walled cells. Examine under a microscope using a 50 per cent *V/V* solution of *glycerol R*. The powder shows starch granules, single or in groups of 2 to 4 and measuring 3 µm to 25 µm in diameter.

C. Thin-layer chromatography (*2.2.27*).

Test solution. To 50 mg of the powdered herbal drug (355) (*2.9.12*) in a thick-walled centrifuge tube add 2 mL of a 230 g/L solution of *trifluoroacetic acid R*, and shake vigorously. Stopper the test tube and heat the mixture at 120 °C for 1 h. Centrifuge the hydrolysate, transfer the clear supernatant into a 50 mL flask, add 10 mL of *water R* and evaporate the solution to dryness under reduced pressure. Take up the residue in 10 mL of *water R* and evaporate again to dryness under reduced pressure. Take up the residue in 2 mL of *methanol R*.

Reference solution (a). Dissolve 10 mg of *arabinose R* in a small quantity of *water R* and dilute to 10 mL with *methanol R*.

Reference solution (b). Dissolve 10 mg of *xylose R* in a small quantity of *water R* and dilute to 10 mL with *methanol R*.

Reference solution (c). Dissolve 10 mg of *galactose R* in a small quantity of *water R* and dilute to 10 mL with *methanol R*.

Plate: *TLC silica gel plate R*

Mobile phase: *water R*, *acetonitrile R* (15:85 *V/V*).

Application: 10 µL, as bands.

Development: over a path of 15 cm.

Detection: Spray with *aminohippuric acid reagent R* and heat at 120 °C for 5 min. Examine in daylight.

Results: see below the sequence of the zones present in the chromatograms obtained with the reference and the test solutions.

Top of the plate	
Xylose: an orange-pink zone	An orange-pink zone (xylose)
Arabinose: an orange-pink zone	An orange-pink zone (arabinose)
Galactose: a yellow zone	A yellow zone (galactose)
Reference solution	**Test solution**

TESTS

Foreign matter (*2.8.2*). Carry out the determination using 10.0 g.

Swelling index (*2.8.4*): minimum 9.

Loss on drying (*2.2.32*): maximum 10.0 per cent, determined on 1.000 g of the powdered herbal drug (355) (*2.9.12*) by drying in an oven at 105 °C for 2 h.

Total ash (*2.4.16*): maximum 4.0 per cent.

01/2013:2148

IVY LEAF

Hederae folium

DEFINITION

Whole or cut, dried leaves of *Hedera helix* L., collected in spring and summer.

Content: minimum 3.0 per cent of hederacoside C ($C_{59}H_{96}O_{26}$; M_r 1221) (dried drug).

IDENTIFICATION

A. Whole leaves are coriaceous, 4-10 cm in length and width, cordate at the base. The lamina is palmately 3-5 lobed, the lobes more or less triangular with entire margins. The upper surface is dark green with a paler, radiate venation, the lower surface more greyish-green and the venation is distinctly raised. The petioles are long, cylindrical, about 2 mm in diameter and grooved longitudinally. Scattered white hairs occur on the petioles and on the surfaces of younger leaves, the older leaves are glabrous. Occasional entire, ovate-rhombic to lanceolate leaves 3-8 cm long from the flowering stems may be present.

B. Microscopic examination (*2.8.23*). The powder is green. Examine under a microscope using *chloral hydrate solution R*. The powder shows the following diagnostic characters (Figure 2148.-1): fragments of the upper epidermis, in surface view [F], showing cells with thickened, rather sinuous, finely pitted anticlinal walls [Fa] usually accompanied by underlying palisade parenchyma [Fb] including some cells containing cluster crystals of calcium oxalate [Fc]; fragments of the lower epidermis, in surface view [E], showing cells with sinuous, irregularly thickened and pitted walls [Ea], stomata that are mostly anomocytic [Eb] but occasionally anisocytic (*2.8.3*), surrounded by cells including some that show faint cuticular striations; the lower epidermis is accompanied by underlying spongy parenchyma [Ec] including some cells containing cluster crystals of calcium oxalate [Ed]; scattered stellate covering trichomes may be present, composed of 4-8 branches joined at the base on a multicellular, biseriate stalk, in surface view [B] or in side view [A]; cluster crystals of calcium oxalate, about 40 µm in diameter, scattered [C] or occurring throughout the parenchyma (Ed, Fc); groups of lignified fibro-vascular tissue from the veins [D].

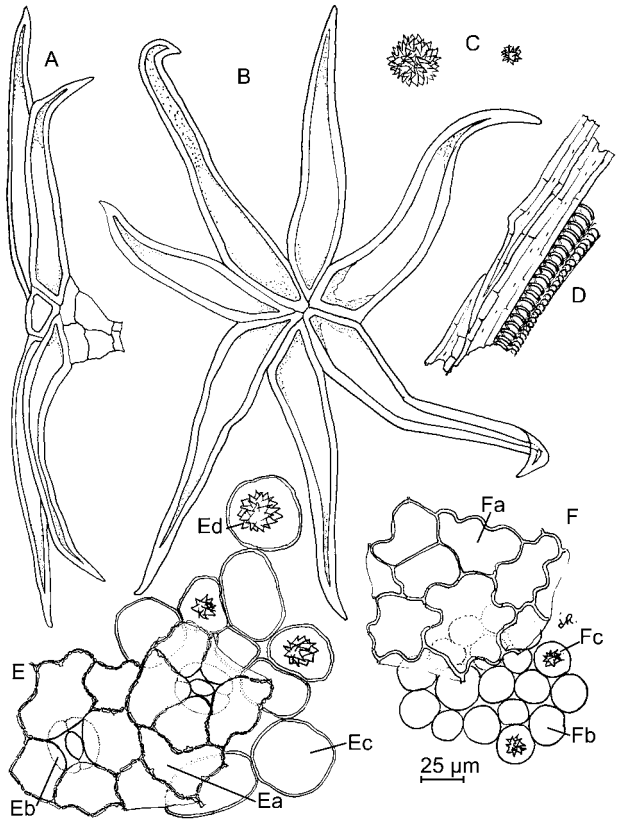

Figure 2148.-1. – *Illustration for identification test B of powdered herbal drug of ivy leaf*

C. Thin-layer chromatography (*2.2.27*).

Test solution. Extract 0.50 g of the powdered herbal drug (355) (*2.9.12*) under a reflux condenser in a water-bath at 60 °C with 5 mL of *methanol R* for 30 min. Cool and filter.

Reference solution. Dissolve 1.0 mg of *hederacoside C R* and 1.0 mg of *α-hederin R* in 1.0 mL of *methanol R*.

Plate: *TLC silica gel plate R*.

Mobile phase: *anhydrous formic acid R*, *acetone R*, *methanol R*, *ethyl acetate R* (4:20:20:30 *V/V/V/V*).

Application: 20 µL as bands of 15 mm.

Development: over a path of 12 cm.

Drying: at 100-105 °C.

Detection: treat with *alcoholic solution of sulfuric acid R*, heat at 110 °C for 10 min and examine in daylight.

Results: see below the sequence of zones present in the chromatograms obtained with the reference solution and the test solution. Furthermore, other zones may be present in the chromatogram obtained with the test solution.

Top of the plate	
	A green zone
α-Hederin: a purple zone	A very faint purple zone (α-hederin) A broad yellow zone 2-3 purple or green zones
Hederacoside C: a purple zone	A purple zone (hederacoside C)
Reference solution	**Test solution**

TESTS

Foreign matter (*2.8.2*): maximum 10 per cent of discoloured leaves, maximum 10 per cent of stems, and maximum 2 per cent of other foreign matter.

Loss on drying (*2.2.32*): maximum 10.0 per cent, determined on 1.000 g of the powdered herbal drug (355) (*2.9.12*) by drying in an oven at 105 °C for 2 h.

Total ash (*2.4.16*): maximum 10.0 per cent.

ASSAY

Liquid chromatography (*2.2.29*).

Solvent mixture: *water R*, *methanol R* (20:80 *V/V*).

Test solution. To 1.00 g of the powdered herbal drug (355) (*2.9.12*) in a 250 mL round-bottomed flask add 50 mL of the solvent mixture and heat under a reflux condenser in a water-bath at 80 °C for 1 h. Cool and filter through a plug of absorbent cotton into a 100 mL volumetric flask. The plug of absorbent cotton together with the residue is again extracted with 30 mL of the solvent mixture under reflux for 30 min. Filter and combine the filtrates. Rinse the round-bottomed flask and the plug of absorbent cotton with the solvent mixture and use the solvent mixture to dilute the contents of the volumetric flask to exactly 100.0 mL. Filter through a suitable membrane before use.

Reference solution. Dissolve an amount of *ivy leaf tincture HRS* corresponding to 3.0 mg of hederacoside C in *methanol R* and dilute to 5.0 mL with the same solvent.

Column:

- *size*: *l* = 0.125 m, Ø = 4 mm;
- *stationary phase*: *end-capped octadecylsilyl silica gel for chromatography R* (5 µm).

Mobile phase:

- *mobile phase A*: mix 14 volumes of *acetonitrile R* with 88 volumes of *water R* and adjust to pH 2.0 with *phosphoric acid R*;
- *mobile phase B*: *phosphoric acid R*, *acetonitrile R* (0.2:99.8 *V/V*);

Time (min)	Mobile phase A (per cent *V/V*)	Mobile phase B (per cent *V/V*)
0 - 5	100	0
5 - 6	100 → 94	0 → 6
6 - 40	94 → 60	6 → 40
40 - 41	60 → 0	40 → 100
41 - 55	0	100

Flow rate: 1.5 mL/min.

Detection: spectrophotometer at 205 nm.

Injection: 20 µL.

System suitability: reference solution:

- *retention time*: hederacoside C = about 20 min; if necessary, adjust the time intervals of the gradient.

Calculate the percentage content of hederacoside C with reference to the dried drug using the following expression:

$$\frac{A_1 \times m_2 \times 20 \times p}{A_2 \times m_1}$$

A_1 = area of the peak due to hederacoside C in the chromatogram obtained with the test solution;

A_2 = area of the peak due to hederacoside C in the chromatogram obtained with the reference solution;

m_1 = mass of the herbal drug to be examined used to prepare the test solution, in grams;

m_2 = mass of *ivy leaf tincture HRS* used to prepare the reference solution, in grams;

p = percentage content of hederacoside C in *ivy leaf tincture HRS*.

04/2009:1229

JAVA TEA

Orthosiphonis folium

DEFINITION

Fragmented, dried leaves and tops of stems of *Orthosiphon stamineus* Benth. (*O. aristatus* Miq.; *O. spicatus* Bak.).

Content: minimum 0.05 per cent of sinensetin ($C_{20}H_{20}O_7$; M_r 372.4) (dried drug).

IDENTIFICATION

A. The leaves are friable, up to 7.5 cm in length and 2.5 cm in width. The petiole is short. The lamina is oval or lanceolate, the apex acuminate and the base cuneate. The abaxial surface of the leaves is light greyish-green and the adaxial surface is dark green or brownish-green. The venation is pinnate with few secondary veins. Examined under a lens (× 10), the secondary veins, after running parallel to the midrib, diverge at an acute angle. The margin is irregularly and roughly dentate, sometimes crenate and the abaxial surface is slightly curved. The petioles are thin, quadrangular, 4-8 mm long and, like the primary venation, usually violet-coloured. Occasionally, inflorescences in clusters of bluish-white or violet flowers, not yet opened, are found.

B. Reduce to a powder (355) (*2.9.12*). The powder is dark green. Examine under a microscope using *chloral hydrate solution R*. The powder shows the following diagnostic characters: fragments of epidermis, with cells with sinuous outlines, bearing unicellular or bicellular conical covering trichomes and articulated uniseriate trichomes up to 450 µm long, consisting of 3-8 cells with thick pitted walls; capitate trichomes with unicellular or bicellular heads; secretory trichomes with unicellular stalks and usually tetracellular heads; diacytic stomata (*2.8.3*), which are more numerous on the lower epidermis.

C. Thin-layer chromatography (*2.2.27*).

Test solution. Shake 1 g of the powdered herbal drug (710) (*2.9.12*) with 10 mL of *methanol R* in a water-bath at 60 °C for 5 min and filter the cooled solution.

Reference solution. Dissolve 1 mg of *sinensetin R* in *methanol R* and dilute to 20 mL with the same solvent.

Plate: *TLC silica gel plate R*.

Mobile phase: *methanol R*, *ethyl acetate R*, *toluene R* (5:40:55 *V/V/V*).

Application: 10 µL as bands.

Development: over a path of 10 cm.

Drying: in air.

Detection: examine in ultraviolet light at 365 nm.

Results: see below the sequence of the zones present in the chromatogram obtained with the reference solution and the test solution. Furthermore, red fluorescent zones are present in the lower third and near the solvent front of the chromatogram obtained with the test solution.

Top of the plate	
	1 or 2 more or less intense blue or violet-blue fluorescent zones
Sinensetin: an intense light blue fluorescent zone	A major blue fluorescent zone (sinensetin)
	2 bluish fluorescent zones
Reference solution	**Test solution**

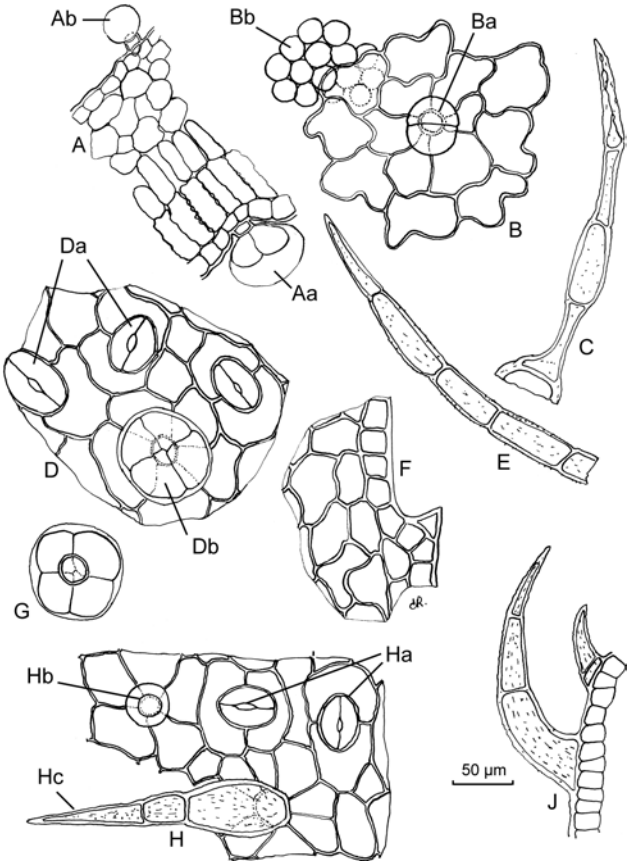

A. Lamina, in transverse section, showing a secretory trichome with a tetracellular head (Aa) and a capitate trichome with a unicellular head (Ab)

B. Upper epidermis, in surface view, showing a capitate trichome with a bicellular head (Ba) and underlying palisade parenchyma (Bb)

C. and E. Articulated covering trichomes (usually only fragments observed)

D. Lower epidermis, in surface view, with diacytic stomata (Da) and secretory trichome with a tetracellular head (Db)

F. Margin of the lamina

G. Secretory trichome

H. Lower epidermis, in surface view, with diacytic stomata (Ha), capitate trichome with a unicellular head (Hb) and multicellular covering trichome (Hc)

J. Covering trichomes on the margin of the lamina

Figure 1229.-1. – *Illustration of powdered herbal drug of Java tea (see Identification B)*

TESTS

Foreign matter (*2.8.2*): maximum 5 per cent of stems with a diameter greater than 1 mm and maximum 2 per cent of other foreign matter.

Loss on drying (*2.2.32*): maximum 11.0 per cent, determined on 1.000 g of the powdered herbal drug (355) (*2.9.12*) by drying in an oven at 105 °C for 2 h.

Total ash (*2.4.16*): maximum 12.5 per cent.

ASSAY

Liquid chromatography (*2.2.29*).

Test solution. Heat 2.5 g of the powdered herbal drug (355) (*2.9.12*) and 100 mL of *methylene chloride R* on a water-bath for 30 min with stirring. Filter. Collect the filtrate and repeat the operation twice, in the same manner, on the filtration residue. Combine the filtrates. Evaporate the solvent under reduced pressure. Dissolve the residue in 25.0 mL of the mobile phase, using an ultrasonic bath if necessary. Filter the solution through a nitrocellulose filter with a pore size of 0.45 µm.

Reference solution. Dissolve 5 mg (m_2) of *sinensetin R* in 80 mL of the mobile phase using an ultrasonic bath if necessary and dilute to 100.0 mL with the mobile phase.

Column:

- *size*: *l* = 0.25 m, Ø = 4.6 mm;
- *stationary phase*: *octadecylsilyl silica gel for chromatography R* (5 µm).

Mobile phase: *tetrahydrofuran R*, *acetic acid R*, *water R*, *methanol R* (5:8:42:45 *V/V/V/V*).

Flow rate: 0.5 mL/min.

Detection: spectrophotometer at 258 nm.

Injection: 20 µL.

Calculate the percentage content of sinensetin using the following expression:

$$\frac{m_2 \times F_1 \times 25}{m_1 \times F_2}$$

F_1 = area of the peak due to sinensetin in the chromatogram obtained with the test solution;

F_2 = area of the peak due to sinensetin in the chromatogram obtained with the reference solution;

m_1 = mass of the herbal drug to be examined, in grams;

m_2 = mass of sinensetin in the reference solution, in grams.

07/2013:1532

JUNIPER

Juniperi galbulus

DEFINITION

Dried ripe cone berry of *Juniperus communis* L.

Content: minimum 10 mL/kg of essential oil (anhydrous drug).

CHARACTERS

Strongly aromatic odour, especially if crushed.

IDENTIFICATION

A. The berry-shaped cone is globular, up to 10 mm in diameter, and violet-brown or blackish-brown, frequently with a bluish bloom. It consists of 3 fleshy scales. The apex has a 3-rayed closed cleft and 3 not very clearly defined projections. A remnant of peduncle is frequently attached at the base. The fleshy part is crumbly and brownish. It contains 3 or, more rarely, 2 small, elongated, extremely hard seeds that have 3 sharp edges and are slightly rounded at the back, acuminate at the apex. The seeds are fused with the fleshy part of the cone berry in the lower part on the outside of their bases. Very large, oval oil glands containing sticky resin lie at the outer surface of the seeds.

B. Microscopic examination (*2.8.23*). The powder is brown. Examine under a microscope using *chloral hydrate solution R*. The powder shows the following diagnostic characters: fragments of epidermis of the cone berry wall containing cells with thick, pitted, colourless walls and brown glandular content, occasionnally with anomocytic stomata (*2.8.3*); fragments of the 3-rayed apical cleft of the cone berry with spaces and epidermal cells interlocked by papillous outgrowths; fragments of the hypodermis with collenchymatous thickened cells; fragments of the mesocarp consisting of large thin-walled parenchymatous cells, usually rounded, with large intercellular spaces and irregular, large, usually scarcely pitted, yellow idioblasts (barrel cells); fragments of schizogenous oil cells; fragments of the testa with thick-walled, pitted, colourless sclereids containing 1 or several prism crystals of calcium oxalate; fragments of the endosperm and embryonic tissue with thin-walled cells containing fatty oil and aleurone grains.

C. Thin-layer chromatography (*2.2.27*).

Test solution. Dilute the oil-xylene mixture obtained in the assay to 5.0 mL with *hexane R*.

Reference solution. Dissolve 4.0 mg of *guaiazulene R* and 50 µL of *cineole R* in 10 mL of *hexane R*.

Plate: *TLC silica gel plate R*.

Mobile phase: *ethyl acetate R*, *toluene R* (5:95 *V/V*).

Application: 20 µL of the test solution and 10 µL of the reference solution, as bands.

Development: over a path of 15 cm.

Drying: in air.

Detection: treat with *anisaldehyde solution R*, heat at 100-105 °C for 5-10 min and examine in daylight.

Results: the chromatogram obtained with the reference solution shows a red zone (guaiazulene) in the upper half and a brownish-violet or greyish-violet zone (cineole) in the lower half; the chromatogram obtained with the test solution shows a strong violet zone (mono- and sesquiterpenes) similar in position to the zone due to guaiazulene in the chromatogram obtained with the reference solution, a reddish-violet zone a little above the zone due to cineole in the chromatogram obtained with the reference solution, a greyish-violet zone (terpinen-4-ol) a little below the zone due to cineole in the chromatogram obtained with the reference solution, and just below that a blue zone; a faint violet zone may be present in a similar position to the zone due to cineole; further zones are present.

TESTS

Foreign matter (*2.8.2*): maximum 5 per cent of unripe or discoloured cone berries and maximum 2 per cent of other foreign matter.

Water (*2.2.13*): maximum 120 mL/kg, determined on 20.0 g of the crushed drug.

Total ash (*2.4.16*): maximum 4.0 per cent.

ASSAY

Essential oil (*2.8.12*). Use 20.0 g of the herbal drug reduced to a coarse powder using a suitable mill immediately before the assay, a 500 mL round-bottomed flask, 200 mL of *water R* as the distillation liquid and 0.5 mL of *xylene R* in the graduated tube. Distil at a rate of 3-4 mL/min for 90 min.

07/2013:1832

JUNIPER OIL

Juniperi aetheroleum

DEFINITION

Essential oil obtained by steam distillation from the ripe, non-fermented berry cones of *Juniperus communis* L. A suitable antioxidant may be added.

CHARACTERS

Appearance: mobile, colourless or yellowish liquid.

Characteristic odour.

IDENTIFICATION

First identification: B.

Second identification: A.

A. Thin-layer chromatography (*2.2.27*).

Test solution. Dissolve 0.2 mL of the substance to be examined in 5 mL of *heptane R*.

Herbal drugs

Reference solution. Dissolve 20 mg of *α-terpineol R* and 20 µL of *terpinen-4-ol R* in 25 mL of *heptane R*.

Plate: *TLC silica gel plate R*.

Mobile phase: *ethyl acetate R*, *toluene R* (5:95 *V/V*).

Application: 20 µL, as bands.

Development: over a path of 12 cm.

Drying: in air.

Detection: treat with *anisaldehyde solution R* and heat at 100-105 °C until the zones appear; examine immediately in daylight.

Results: see below the sequence of zones present in the chromatograms obtained with the reference solution and the test solution.

Top of the plate	
	An intense brownish-violet zone
	A brown zone
	A violet-pink zone
Terpinen-4-ol: a brownish-violet zone	A brownish-violet zone (terpinen-4-ol)
	A violet zone
α-Terpineol: a violet or brownish-violet zone	A violet or brownish-violet zone (α-terpineol)
Reference solution	**Test solution**

B. Examine the chromatograms obtained in the test for chromatographic profile.

Results: the characteristic peaks in the chromatogram obtained with the test solution are similar in retention time to those in the chromatogram obtained with the reference solution.

TESTS

Relative density (*2.2.5*): 0.857 to 0.876.

Refractive index (*2.2.6*): 1.471 to 1.483.

Optical rotation (*2.2.7*): − 15° to − 0.5°.

Peroxide value (*2.5.5*): maximum 20.

Fatty oils and resinified essential oils (*2.8.7*). It complies with the test for fatty oils and resinified essential oils.

Chromatographic profile. Gas chromatography (*2.2.28*): use the normalisation procedure.

Test solution. Dissolve 60 mg of the substance to be examined in *trimethylpentane R* and dilute to 5.0 mL with the same solvent.

Reference solution. Mix 25 µL each of *α-pinene R*, *sabinene R*, *β-pinene R*, *β-myrcene R*, *α-phellandrene R*, *limonene R*, *terpinen-4-ol R*, *bornyl acetate R* and *β-caryophyllene R* and dilute to 25.0 mL with *trimethylpentane R*.

Column:

– *material*: fused silica;

– *size*: *l* = 30 m (a film thickness of 1 µm may be used) to 60 m (a film thickness of 0.2 µm may be used), Ø = 0.25-0.53 mm;

– *stationary phase*: *poly(dimethyl)(diphenyl)siloxane R*.

Carrier gas: *helium for chromatography R*.

Flow rate: 2.0 mL/min.

Split ratio: 1:50.

Temperature:

	Time (min)	Temperature (°C)
Column	0 - 1	60
	1 - 58	60→230
Injection port		250
Detector		250

Detection: flame ionisation.

Injection: 0.5 µL.

Elution order: order indicated in the composition of the reference solution. Record the retention times of these substances.

System suitability: reference solution:

– *resolution*: minimum 1.5 between the peaks due to sabinene and β-pinene.

Using the retention times determined from the chromatogram obtained with the reference solution, locate the components of the reference solution in the chromatogram obtained with the test solution.

Determine the percentage content of the components. Disregard the peak due to trimethylpentane and peaks comprising less than 0.01 per cent of the total surface area. The percentages are within the following ranges:

– *α-pinene*: 20 per cent to 50 per cent;

– *sabinene*: maximum 20 per cent;

– *β-pinene*: 1.0 per cent to 12 per cent;

– *β-myrcene*: 1.0 per cent to 35 per cent;

– *α-phellandrene*: maximum 1.0 per cent;

– *limonene*: 2.0 per cent to 12 per cent;

– *terpinen-4-ol*: 0.5 per cent to 10 per cent;

– *bornyl acetate*: maximum 2.0 per cent;

– *β-caryophyllene*: maximum 7.0 per cent.

STORAGE

At a temperature not exceeding 25 °C.

01/2008:1426
corrected 6.0

KELP

Fucus vel Ascophyllum

DEFINITION

Fragmented dried thallus of *Fucus vesiculosus* L. or *F. serratus* L. or *Ascophyllum nodosum* Le Jolis.

Content: minimum 0.03 per cent and maximum 0.2 per cent of total iodine (A_r 126.9) (dried drug).

CHARACTERS

Salty and mucilaginous taste.

Unpleasant marine odour.

IDENTIFICATION

A. The drug consists of fragments with a corneous consistency, blackish-brown to greenish-brown, sometimes covered with whitish efflorescence. The thallus consists of a ribbon-like blade, branching dichotomously with prominent central ribs (pseudoveins). *F. vesiculosus* typically shows a foliose blade with smooth edges and bears occasional ovoid, single or paired, air vesicles. The ends of certain branches are of ovoid shape and a little widened. They bear numerous reproductive organs (conceptacles). *F. serratus* has a foliose blade with a serrate margin and no vesicles, the branches bearing conceptacles are less swollen. The thallus of *A. nodosum* is irregularly branched, without pseudo-midrib. It shows single ovoid air vesicles; the falciform conceptacles are located at the end of small branches.

B. Reduce to a powder (355) (*2.9.12*). The powder is greenish-brown. Examine under a microscope using *chloral hydrate solution R*. The powder shows fragments of surface tissue with regular isodiametric cells with brown contents, and fragments of deep tissue with colourless, elongated cells arranged in long filaments with large mucilaginous spaces between them. Thick-walled cells in files and in closely packed groups, from the pseudovein, are sometimes visible.

C. To 1 g of the powdered herbal drug (355) (*2.9.12*) add 20 mL of a 2 per cent *V/V* solution of *hydrochloric acid R*. Shake vigorously and filter. Wash the residue with 10 mL of *water R* and filter. To the residue add 10 mL of a 200 g/L solution of *sodium carbonate R*. Shake and centrifuge. Collect the supernatant. Adjust to pH 1.5 using *sulfuric acid R*. A white, flocculent precipitate is slowly formed.

TESTS

Arsenic (*2.4.27*) : maximum 90 ppm.

Cadmium (*2.4.27*) : maximum 4 ppm.

Lead (*2.4.27*) : maximum 5 ppm.

Mercury (*2.4.27*) : maximum 0.1 ppm.

Swelling index (*2.8.4*): minimum 6.

Loss on drying (*2.2.32*): maximum 15.0 per cent, determined on 1.000 g by drying in an oven at 105 °C, for 2 h.

Total ash (*2.4.16*): maximum 24 per cent.

Ash insoluble in hydrochloric acid (*2.8.1*): maximum 3.0 per cent.

ASSAY

Total iodine. To 1.000 g of the powdered herbal drug, in a tall silica crucible, add 5 mL of *water R* and 5 g of *potassium hydroxide R*. Stir with a magnesium rod. Heat on a water bath. Add 1 g of *potassium carbonate R*. Mix, add the tip of the magnesium rod with the residues of the drug and dry, first on a water-bath then over an open flame. Incinerate raising the temperature progressively to not more than 600 °C. Allow to cool. Add 20 mL of *water R* and heat gently to boiling, stirring with a glass rod. Filter the hot mixture through an unpleated filter, into a conical flask. Rinse the residue with 4 quantities, each of 20 mL, of hot *water R*. Rinse the filter and the crucible with 50 mL of hot *water R*. Combine the solutions. Allow to cool. Neutralise with *dilute sulfuric acid R* in the presence of *methyl orange solution R*. Add 3 mL of *dilute sulfuric acid R* and 1 mL of *bromine water R*. The solution is yellow. After 5 min add 0.6 mL of a 50 g/L solution of *phenol R*. The solution is clear. Acidify with 5 mL of *phosphoric acid R* and add 0.2 g of *potassium iodide R*. Allow to stand for 5 min protected from light. Add 1 mL of *starch solution R* and titrate with *0.01 M sodium thiosulfate*.

1 mL of *0.01 M sodium thiosulfate* is equivalent to 0.2115 mg of iodine.

LABELLING

The label states the species of kelp present.

07/2013:1885

KNOTGRASS

Polygoni avicularis herba

DEFINITION

Whole or fragmented, dried flowering aerial parts of *Polygonum aviculare* L. *s.l.*

Content: minimum 0.30 per cent of flavonoids, expressed as hyperoside ($C_{21}H_{20}O_{12}$; M_r 464.4) (dried drug).

IDENTIFICATION

A. The stem is 0.5-2 mm thick, branched, with nodes, cylindrical or slightly angular, and longitudinally striated. It bears sessile or shortly petiolate, glabrous, entire leaves, which differ widely in shape and size. The sheath-like stipules (ochrea) are lacerate and silvery. The small, axillary flowers have 5 greenish-white perianth segments, the tips of which are often red. The dry, indehiscent fruits are 2-4 mm, brown or black, triangular, usually punctate or striate.

B. Microscopic examination (*2.8.23*). The powder is greenish-brown. Examine under a microscope using *chloral hydrate solution R*. The powder shows the following diagnostic characters (Figure 1885.-1): fragments of lower [A] and upper [D] leaf epidermises with a striated cuticle and anisocytic stomata (*2.8.3*) [Aa, Da]; polygonal cells of the upper epidermis [D] with slightly thickened beaded walls, often associated with palisade parenchyma [Db]; cells of the lower epidermis [A], with thin, sinuous walls; fragments of the margin of the lamina of the leaf with irregular cells [J]; fragments of parenchyma [G] with numerous cells containing cluster crystals of calcium oxalate, some of which are very large [Ga], often associated with vessels [Gb]; groups of fibres [B, C] with thick walls [Ba, Cb] from the hypodermis of the stem associated either with the epidermis [Ca] or with parenchyma consisting of cells containing cluster crystals of calcium oxalate [Bb]; fragments of the ochrea [E] with elongated, thin-walled cells [Ea], along which run very elongated fibres [Eb]; globular pollen grains with a smooth exine and 3 germinal pores [H]; occasional brown fragments of the exocarp composed of cells with thick, sinuous walls [F].

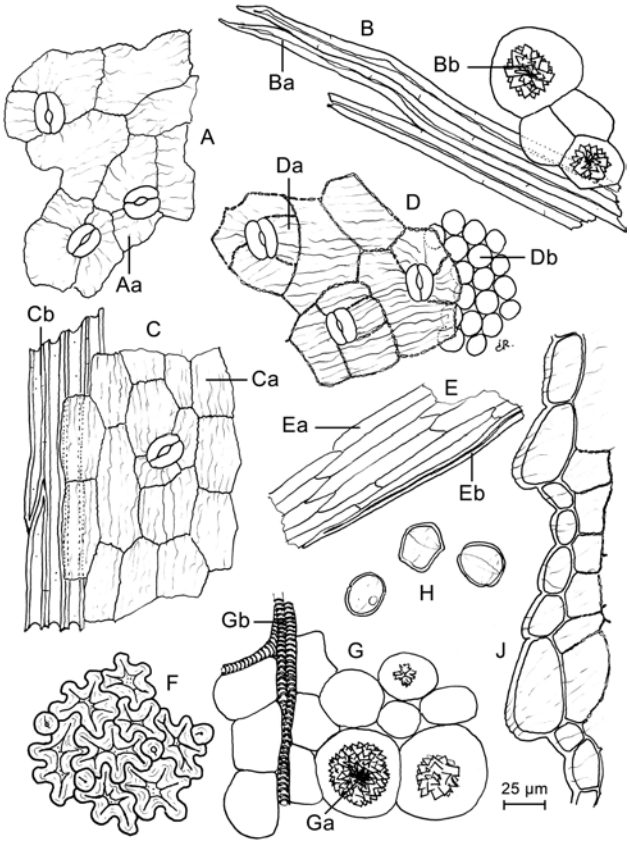

Figure 1885.-1. – *Illustration for identification test B of powdered herbal drug of knotgrass*

C. Thin-layer chromatography (*2.2.27*).

Test solution. To 1.0 g of the powdered herbal drug (355) (*2.9.12*) add 10 mL of *methanol R*. Heat the mixture in a water-bath under a reflux condenser for 10 min. Cool and filter.

Reference solution. Dissolve 1 mg of *caffeic acid R*, 1 mg of *chlorogenic acid R* and 2.5 mg of *hyperoside R* in 10 mL of *methanol R*.

Plate: *TLC silica gel plate R*.

Mobile phase: *anhydrous formic acid R*, *glacial acetic acid R*, *water R*, *ethyl acetate R* (7:7:14:72 *V/V/V/V*).

Application: 20 µL as bands.

Development: over a path of 10 cm.

Drying: at 100-105 °C.

Detection: treat with a 10 g/L solution of *diphenylboric acid aminoethyl ester R* in *methanol R*; subsequently treat with a 50 g/L solution of *macrogol 400 R* in *methanol R*. Allow to dry in air for about 30 min. Examine in ultraviolet light at 365 nm.

Results: see below the sequence of fluorescent zones present in the chromatograms obtained with the reference solution and the test solution. Furthermore, other fluorescent zones are present in the chromatogram obtained with the test solution.

Top of the plate	
Caffeic acid: a light blue fluorescent zone	1 or 2 blue fluorescent zones (caffeic acid)
———	———
	1 or 2 yellowish-green fluorescent zones
	A yellow fluorescent zone
Hyperoside: a yellowish-brown fluorescent zone	
	A yellowish-brown fluorescent zone
Chlorogenic acid: a light blue fluorescent zone	A light blue fluorescent zone (chlorogenic acid)
———	———
	A yellowish-brown fluorescent zone
Reference solution	**Test solution**

TESTS

Foreign matter (*2.8.2*): maximum 2 per cent of roots and maximum 2 per cent of other foreign matter.

Loss on drying (*2.2.32*): maximum 10.0 per cent, determined on 1.000 g of the powdered herbal drug (710) (*2.9.12*) by drying in an oven at 105 °C for 2 h.

Total ash (*2.4.16*): maximum 10.0 per cent.

ASSAY

Stock solution. In a 100 mL round-bottomed flask, place 0.800 g of the powdered herbal drug (355) (*2.9.12*), and add 1 mL of a 5 g/L solution of *hexamethylenetetramine R*, 20 mL of *acetone R* and 2 mL of *hydrochloric acid R1*. Boil the mixture under a reflux condenser for 30 min. Filter the liquid through a plug of absorbent cotton into a flask. Add the absorbent cotton to the residue in the round-bottomed flask and extract with 2 quantities, each of 20 mL, of *acetone R*, each time boiling under a reflux condenser for 10 min. Allow to cool, filter each extract through the plug of absorbent cotton into the flask. Filter the combined acetone extracts through a filter paper into a volumetric flask and dilute to 100.0 mL with *acetone R*, rinsing the flask and the filter paper. Introduce 20.0 mL of the solution into a separating funnel, add 20 mL of *water R* and shake the mixture with 1 quantity of 15 mL and then 3 quantities, each of 10 mL, of *ethyl acetate R*. Combine the ethyl acetate extracts in a separating funnel and wash with 2 quantities, each of 50 mL, of *water R*. Dry the extracts over 10 g of *anhydrous sodium sulfate R*, filter into a 50 mL volumetric flask and dilute to volume with *ethyl acetate R*.

Test solution. To 10.0 mL of the stock solution add 1 mL of *aluminium chloride reagent R* and dilute to 25.0 mL with a 5 per cent *V/V* solution of *glacial acetic acid R* in *methanol R*.

Compensation liquid. Dilute 10.0 mL of the stock solution to 25.0 mL with a 5 per cent *V/V* solution of *glacial acetic acid R* in *methanol R*.

Measure the absorbance (*2.2.25*) of the test solution after 30 min by comparison with the compensation liquid at 425 nm. Calculate the percentage content of flavonoids, calculated as hyperoside, using the following expression:

$$\frac{A \times 1.25}{m}$$

i.e. taking the specific absorbance of hyperoside to be 500.

A = absorbance at 425 nm;

m = mass of the herbal drug to be examined, in grams.

01/2012:2434

KUDZUVINE ROOT

Puerariae lobatae radix

DEFINITION

Fragmented, dried root of *Pueraria lobata* (Willd.) Ohwi.

Content: minimum 6.5 per cent of total isoflavonoids, expressed as puerarin ($C_{12}H_{20}O_9$; M_r 416.4) (dried drug), of which minimum 45 per cent consists of puerarin.

IDENTIFICATION

A. Small, square pieces or thick, rectangular slices, 5-35 cm long and 0.5-1 cm thick. The outer bark is pale brown, with longitudinal wrinkles and rough; the section is yellowish-white and shows indistinct striations. The texture is strongly fibrous.

B. Microscopic examination (*2.8.23*). The powder is pale brown. Examine under a microscope using *chloral hydrate solution R*. The powder shows the following diagnostic characters: thick-walled lignified fibres, which occur in groups, surrounded by a calcium oxalate prism sheath; crystal cells with thickened walls; rare sclereids, subrounded or elliptical, about 50 µm in diameter; relatively large bordered-pitted vessels with hexagonal or elliptical pits arranged very densely. Examine under a microscope using a 50 per cent *V/V* solution of *glycerol R*. The powder shows numerous starch granules, simple or 2-20 compound; the starch granules are spheroidal, semi-rounded or polygonal with a pointed, cleft or stellate hilum, about 15 µm in diameter.

C. Thin-layer chromatography (*2.2.27*).

Test solution. Sonicate 0.5 g of the powdered herbal drug (355) (*2.9.12*) with 5 mL of *methanol R*, then centrifuge; use the supernatant.

Reference solution. Dissolve 5 mg of *puerarin R* and 5 mg of *daidzin R* in 5 mL of *methanol R*.

Plate: *TLC silica gel F_{254} plate R* (2-10 µm).

Mobile phase: *water R*, *methylene chloride R*, *methanol R*, *ethyl acetate R* (10:20:22:40 *V/V/V/V*); use the lower layer.

Application: 7 µL as bands of 8 mm.

Development: over a path of 6 cm.

Drying: in air.

Detection: examine in ultraviolet light at 254 nm.

Results: see below the sequence of zones present in the chromatograms obtained with the reference solution and the test solution. Furthermore, other zones may be present in the chromatogram obtained with the test solution.

Top of the plate	
	A weak quenching zone
———	———
	A quenching zone
Daidzin: a quenching zone	A quenching zone
Puerarin: a quenching zone	A quenching zone
———	———
	At least 5 quenching zones
Reference solution	**Test solution**

Herbal drugs

TESTS

Foreign matter (*2.8.2*): maximum 5 per cent.

Loss on drying (*2.2.32*): maximum 10.0 per cent, determined on 1.000 g of the powdered herbal drug (355) (*2.9.12*) by drying in an oven at 105 °C.

Total ash (*2.4.16*): maximum 7.0 per cent.

Ash insoluble in hydrochloric acid (*2.8.1*): maximum 1.0 per cent.

ASSAY

Liquid chromatography (*2.2.29*).

Test solution. Introduce 0.100 g of the powdered herbal drug (355) (*2.9.12*) into a 250 mL conical flask, add 50.0 mL of *ethanol (30 per cent V/V) R* and weigh. Heat under a reflux condenser for 30 min. Allow to cool and weigh again. Adjust to the initial mass with *ethanol (30 per cent V/V) R*, mix well and filter.

Reference solution. Introduce an amount of *kudzuvine root dry extract HRS* corresponding to 3.0 mg of puerarin into a 250 mL conical flask, add 50.0 mL of *ethanol (30 per cent V/V) R* and weigh. Heat under a reflux condenser for 30 min. Allow to cool and weigh again. Adjust to the initial mass with *ethanol (30 per cent V/V) R*, mix well and filter.

Column: 2 columns coupled in series:

- *size*: *l* = 0.10 m, Ø = 4.6 mm;
- *stationary phase*: *monolithic octadecylsilyl silica gel for chromatography R.*

Mobile phase:

- *mobile phase A*: *glacial acetic acid R, water R* (0.1:99.9 *V/V*);
- *mobile phase B*: *acetonitrile R*;

Time (min)	Mobile phase A (per cent *V/V*)	Mobile phase B (per cent *V/V*)
0 - 16.5	90 → 71	10 → 29

Flow rate: 3.0 mL/min.

Detection: spectrophotometer at 260 nm.

Injection: 10 µL.

Identification of peaks: use the chromatogram supplied with *kudzuvine root dry extract HRS* and the chromatogram obtained with the reference solution to identify the peaks due to the isoflavonoids (3-hydroxypuerarin, puerarin, 3-methoxypuerarin, 6-*O*″-D-xylosylpuerarin and daidzin).

Relative retention with reference to puerarin (retention time = about 3.4 min): 3-hydroxypuerarin = about 0.7; 3-methoxypuerarin = about 1.09; 6-*O*″-D-xylosylpuerarin = about 1.15; daidzin = about 1.4.

System suitability: reference solution:

- *peak-to-valley ratio*: minimum 10, where H_p = height above the baseline of the peak due to 3-methoxypuerarin and H_v = height above the baseline of the lowest point of the curve separating this peak from the peak due to puerarin.

Calculate the percentage content of puerarin using the following expression:

$$\frac{A_1 \times m_2 \times p}{A_2 \times m_1}$$

A_1 = area of the peak due to puerarin in the chromatogram obtained with the test solution;

A_2 = area of the peak due to puerarin in the chromatogram obtained with the reference solution;

m_1 = mass of the herbal drug to be examined used to prepare the test solution, in grams;

m_2 = mass of *kudzuvine root dry extract HRS* used to prepare the reference solution, in grams;

p = percentage content of puerarin in *kudzuvine root dry extract HRS*.

Calculate the percentage content of total isoflavonoids (3-hydroxypuerarin, puerarin, 3-methoxypuerarin, 6-*O*″-D-xylosylpuerarin and daidzin) using the following expression:

$$\frac{A_1 \times m_2 \times p}{A_2 \times m_1}$$

A = sum of the areas of the peaks due to the isoflavonoids (3-hydroxypuerarin, puerarin, 3-methoxypuerarin, 6-*O*″-D-xylosylpuerarin and daidzin) in the chromatogram obtained with the test solution;

A_2 = area of the peak due to puerarin in the chromatogram obtained with the reference solution;

m_1 = mass of the herbal drug to be examined used to prepare the test solution, in grams;

m_2 = mass of *kudzuvine root dry extract HRS* used to prepare the reference solution, in grams;

p = percentage content of puerarin in *kudzuvine root dry extract HRS*.

04/2011:1534

LAVENDER FLOWER

Lavandulae flos

DEFINITION

Dried flower of *Lavandula angustifolia* Mill. (*L. officinalis* Chaix).

Content: minimum 13 mL/kg of essential oil (anhydrous drug).

CHARACTERS

Strongly aromatic odour.

IDENTIFICATION

First identification: *A, B, D.*

Second identification: *A, B, C.*

A. The flower has a short peduncle and consists of a bluish-grey tubular calyx divided distally into 4 very short teeth and a small rounded lobe, a blue bilabial corolla with the upper lip bifid and the lower lip trilobate and 4 didynamous stamens with ovoid anthers.

B. Microscopic examination (*2.8.23*). The powder is bluish-grey. Examine under a microscope using *chloral hydrate solution R*. The powder shows the following diagnostic characters (Figure 1534.-1): covering trichomes bifurcating at one or more levels [C, L]; secretory trichomes with short stalks and 8-celled heads of the *Lamiaceae* type in side view [H], in surface view [M]; glandular trichomes with unicellular [O] or multicellular [K] stalks and unicellular heads; glandular trichomes with long uneven stalks and unicellular heads, separated from the stalk by an intermediary cell with a smooth cuticle, certain trichomes show a crown of small spheroid protuberances

Herbal drugs

just below the insertion point of the intermediary cell on the stalk [G]; fragments of papillose epidermis from the inner surface of the petals, in surface view [J], in side view [P]; fragments of calyx epidermis with sinuous-walled cells and containing prismatic crystals of calcium oxalate [Q]; spherical pollen grains which have a diameter of about 45 µm and an exine with 6 slit-like germinal pores and 6 ribbon-like groins radiating from the poles [A, D, E, F]; rare fragments of leaf epidermis with stomata, mostly of the diacytic type (*2.8.3*) [B]; fragments of vascular tissue with spiral vessels included in parenchyma with some cells containing small calcium oxalate cluster crystals [N].

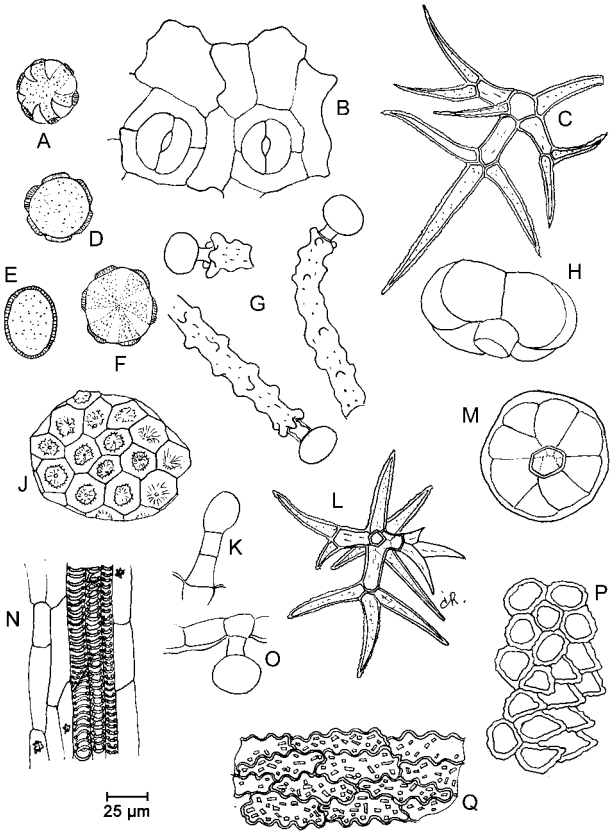

Figure 1534.-1. – *Illustration for identification test B of powdered herbal drug of lavender flower*

C. Thin-layer chromatography (*2.2.27*).

Test solution. To 0.5 g of the powdered herbal drug (355) (*2.9.12*) add 5 mL of *hexane R*, shake for 5 min and filter.

Reference solution. Dissolve 10 µL of *linalol R* and 10 µL of *linalyl acetate R* in 5 mL of *hexane R*.

Plate: *TLC silica gel plate R*.

Mobile phase: *ethyl acetate R*, *toluene R* (5:95 *V/V*).

Application: 10 µL as bands.

Development: over a path of 15 cm.

Drying: in air.

Detection: spray with *anisaldehyde solution R*. Heat at 100-105 °C for 5-10 min and examine in daylight.

Results: the chromatogram obtained with the reference solution shows in the lower third a greyish-blue zone (linalol) and in the middle third a greyish-blue zone (linalyl acetate). The chromatogram obtained with the test solution shows the zones due to linalol and linalyl acetate and in the middle, between these zones, a redish-violet zone (epoxydihydrocaryophyllene). Further zones are also present.

D. Examine the chromatograms obtained in the test for other species and varieties of lavender.

Results: the 5 principal peaks in the chromatogram obtained with the reference solution are similar in retention time to the corresponding peaks in the chromatogram obtained with the test solution. Among them are mainly linalol and linalyl acetate peaks.

TESTS

Foreign matter (*2.8.2*): maximum 3 per cent of stems and maximum 2 per cent of other foreign matter.

Other species and varieties of lavender. Gas chromatography (*2.2.28*): use the normalisation procedure.

Test solution. Dilute 0.2 mL of the essential oil-xylene mixture obtained in the assay to 5 mL with *hexane R*, add 1 g of *anhydrous sodium sulfate R*, shake and use the supernatant.

Reference solution. Dissolve 0.1 g of *limonene R*, 0.2 g of *cineole R*, 0.05 g of *camphor R*, 0.4 g of *linalol R*, 0.6 g of *linalyl acetate R* and 0.2 g of *α-terpineol R* in 100 mL of *hexane R*.

Column:

- *material*: fused silica;
- *size*: *l* = 60 m, Ø = 0.25 mm;
- *stationary phase*: *macrogol 20 000 R*.

Carrier gas: *helium for chromatography R*.

Flow rate: 1.5 mL/min.

Split ratio: 1:100.

Temperature:

	Time (min)	Temperature (°C)
Column	0 - 15	70
	15 - 70	70 → 180
Injection port		220
Detector		220

Detection: flame ionisation.

Injection: the same volume of each solution.

Elution order: order indicated in the composition of the reference solution. Record the retention times of these substances.

System suitability: reference solution:

- *resolution*: minimum 1.5 between the peaks due to limonene and cineole;
- *number of theoretical plates*: minimum 30 000, calculated for the peak due to limonene at 110 °C.

Using the retention times determined from the chromatogram obtained with the reference solution, locate the 6 components of the reference solution in the chromatogram obtained with the test solution. Disregard the peaks due to hexane and xylene.

Limit:

- *camphor*: maximum 1 per cent.

Water (*2.2.13*): maximum 100 mL/kg, determined on 20.0 g.

Total ash (*2.4.16*): maximum 9.0 per cent.

ASSAY

Essential oil (*2.8.12*). Use 20.0 g of the herbal drug, a 1000 mL round-bottomed flask, 500 mL of *water R* as the distillation liquid and 0.5 mL of *xylene R* in the graduated tube. Distil at a rate of 2-3 mL/min for 2 h.

07/2010:1338

LAVENDER OIL

Lavandulae aetheroleum

DEFINITION

Essential oil obtained by steam distillation from the flowering tops of *Lavandula angustifolia* Mill. (*Lavandula officinalis* Chaix).

CHARACTERS

Appearance: colourless or pale yellow, clear liquid.

Odour: complex, reminiscent of linalyl acetate.

IDENTIFICATION

First identification: B.

Second identification: A.

A. Thin-layer chromatography (*2.2.27*).

Test solution. Dissolve 20 µL of the essential oil to be examined in 1 mL of *toluene R*.

Reference solution. Dissolve 10 µL of *linalol R*, 10 µL of *cineole R* and 10 µL of *linalyl acetate R* in 1 mL of *toluene R*.

Plate: *TLC silica gel plate R* (5-40 µm) [or *TLC silica gel plate R* (2-10 µm)].

Mobile phase: *ethyl acetate R*, *toluene R* (5:95 *V/V*).

Application: 10 µL [or 2 µL] as bands of 10 mm [or 6 mm].

Development: over a path of 10 cm [or 8 cm].

Drying: in air.

Detection: spray with *anisaldehyde solution R* and heat at 100-105 °C for 5-10 min; examine immediately in daylight.

Results: see below the sequence of zones present in the chromatograms obtained with the reference solution and the test solution. Furthermore, other violet-red or greenish-brown zones are present in the chromatogram obtained with the test solution above the zone of linalyl acetate up to the solvent front.

Top of the plate	
	A violet-red or greenish-brown zone
Linalyl acetate: a violet or brown zone	A violet or brown zone (linalyl acetate) A violet-red zone
1,8-Cineole: a violet-brown zone	Possibly a weak violet-brown zone (1,8-cineole)
Linalol: a violet or brown zone	A violet or brown zone (linalol) A weak yellowish-brown zone Several unresolved zones
Reference solution	**Test solution**

B. Examine the chromatograms obtained in the test for chromatographic profile.

Results: the characteristic peaks in the chromatogram obtained with the test solution are similar in retention time to those in the chromatogram obtained with reference solution (a).

TESTS

Relative density (*2.2.5*): 0.878 to 0.892.

Refractive index (*2.2.6*): 1.455 to 1.466.

Optical rotation (*2.2.7*): – 12.5° to – 6.0°.

Acid value (*2.5.1*): maximum 1.0, determined on 5.0 g of the substance to be examined dissolved in 50 mL of the prescribed mixture of solvents.

Chromatographic profile. Gas chromatography (*2.2.28*): use the normalisation procedure.

Test solution. Dissolve 200 µL of the essential oil to be examined in *heptane R* and dilute to 10.0 mL with the same solvent.

Reference solution (a). Dissolve 5 µL of *limonene R*, 5 µL of *cineole R*, 5 µL of *3-octanone R*, 5 mg of *camphor R*, 40 µL of *linalol R*, 50 µL of *linalyl acetate R*, 10 µL of *terpinen-4-ol R*, 5 µL of *lavandulyl acetate R*, 5 µL of *lavandulol R* and 5 mg of *α-terpineol R* in *heptane R* and dilute to 10 mL with the same solvent.

Reference solution (b). Dissolve 5 µL of *limonene R* in *heptane R* and dilute to 50.0 mL with the same solvent. Dilute 0.5 mL of the solution to 5.0 mL with *heptane R*.

Column:

- *material*: fused silica;
- *size*: *l* = 60 m, Ø = 0.25 mm;
- *stationary phase*: *macrogol 20 000 R* (film thickness 0.25 µm).

Carrier gas: *helium for chromatography R*.

Flow rate: 1.5 mL/min.

Split ratio: 1:50.

Temperature:

	Time (min)	Temperature (°C)
Column	0 - 15	70
	15 - 70	70 → 180
Injection port		220
Detector		220

Detection: flame ionisation.

Injection: 1 µL.

Elution order: order indicated in the composition of reference solution (a). Record the retention times of these substances.

System suitability: reference solution (a):

- *resolution*: minimum 1.4 between the peaks due to terpinen-4-ol and lavandulyl acetate.

Using the retention times determined from the chromatogram obtained with reference solution (a), locate the components of reference solution (a) in the chromatogram obtained with the test solution.

Determine the percentage content of each of these components. The percentages are within the following ranges:

- *limonene*: maximum 1.0 per cent;
- *1,8-cineole*: maximum 2.5 per cent;
- *3-octanone*: 0.1 per cent to 5.0 per cent;
- *camphor*: maximum 1.2 per cent;
- *linalol*: 20.0 per cent to 45.0 per cent;
- *linalyl acetate*: 25.0 per cent to 47.0 per cent;
- *terpinen-4-ol*: 0.1 per cent to 8.0 per cent;
- *lavandulyl acetate*: minimum 0.2 per cent;
- *lavandulol*: minimum 0.1 per cent;
- *α-terpineol*: maximum 2.0 per cent;
- *disregard limit*: the area of the principal peak in the chromatogram obtained with reference solution (b) (0.05 per cent).

Chiral purity. Gas chromatography (*2.2.28*).

Test solution. Dissolve 0.02 g of the essential oil to be examined in *pentane R* and dilute to 10 mL with the same solvent.

Herbal drugs

Reference solution. Dissolve 10 µL of *linalol R* (mixture of (*R*)-linalol and (*S*)-linalol), add 5 mg of *borneol R* and 10 µL of *linalyl acetate R* (mixture of (*R*)-linalyl acetate and (*S*)-linalyl acetate) in *pentane R* and dilute to 10 mL with the same solvent.

Column:
- *material*: fused silica;
- *size*: *l* = 25 m, Ø = 0.25 mm;
- *stationary phase*: *modified β-cyclodextrin for chiral chromatography R* (film thickness 0.25 µm).

Carrier gas: *helium for chromatography R.*

Flow rate: 1.3 mL/min.

Split ratio: 1:30.

Temperature:

	Time (min)	Temperature (°C)
Column	0 - 65	50 → 180
Injection port		230
Detector		230

Detection: flame ionisation.

Injection: 1 µL.

Elution order: (*R*)-linalol, (*S*)-linalol, borneol, (*R*)-linalyl acetate, (*S*)-linalyl acetate; depending on the operating conditions and the state of the column, borneol may elute before or after (*S*)-linalol.

System suitability: reference solution:
- *resolution*: minimum 5.5 between the peaks due to (*R*)-linalol and (*S*)-linalol; minimum 2.9 between the peaks due to (*S*)-linalol and borneol; minimum 2.0 between the peaks due to (*R*)-linalyl acetate and (*S*)-linalyl acetate.

Calculate the percentage content of the specified (*S*)-enantiomers using the following expression:

$$\frac{A_S}{A_S + A_R} \times 100$$

A_S = area of the peak due to the corresponding (*S*)-enantiomer;

A_R = area of the peak due to the corresponding (*R*)-enantiomer.

Limits:
- *(S)-linalol*: maximum 12 per cent;
- *(S)-linalyl acetate*: maximum 1 per cent.

STORAGE

At a temperature not exceeding 25 °C.

01/2008:0620

LEMON OIL

Limonis aetheroleum

DEFINITION

Essential oil obtained by suitable mechanical means, without the aid of heat, from the fresh peel of *Citrus limon* (L.) Burman fil.

CHARACTERS

Appearance: clear, mobile, pale yellow or greenish-yellow liquid. It may become cloudy at low temperatures.

Characteristic odour.

IDENTIFICATION

First identification: *B.*

Second identification: *A.*

A. Thin-layer chromatography (*2.2.27*).

Test solution. Mix 1 mL of the substance to be examined in 1 mL of *toluene R.*

Reference solution. Dissolve 10 mg of *citropten R* and 50 µL of *citral R* in *toluene R* and dilute to 10 mL with the same solvent.

Plate: *TLC silica gel GF$_{254}$ plate R.*

Mobile phase: *ethyl acetate R*, *toluene R* (15:85 *V/V*).

Application: 10 µL, as bands.

Development: over a path of 15 cm.

Drying: in air.

Detection A: examine in ultraviolet light at 254 nm.

Results A: see below the sequence of the zones present in the chromatograms obtained with the reference solution and the test solution.

Top of the plate	
Citral: a quenching zone	A quenching zone (bergamotin) A quenching zone (citral)
Citropten: a light blue fluorescent zone	A dark blue zone (5-geranyloxy-7-methoxycoumarin) A light blue fluorescent zone (citropten) A quenching zone (psoralen derivative) A quenching zone (biakangelicin)
Reference solution	**Test solution**

Detection B: examine in ultraviolet light at 365 nm.

Results B: see below the sequence of the zones present in the chromatograms obtained with the reference solution and the test solution.

Top of the plate	
Citral: a quenching zone	A yellow fluorescent zone (bergamotin) A quenching zone (citral)
Citropten: a bright blue fluorescent zone	A bright blue fluorescent zone (5-geranyloxy-7-methoxycoumarin) A bright violet-blue fluorescent zone (citropten) A yellow fluorescent zone (psoralen derivative) An orange zone (biakangelicin)
Reference solution	**Test solution**

B. Examine the chromatograms obtained in the test for chromatographic profile.

Results: the characteristic peaks in the chromatogram obtained with the test solution are similar in retention time to those in the chromatogram obtained with the reference solution.

TESTS

Relative density (*2.2.5*): 0.850 to 0.858.

Refractive index (*2.2.6*): 1.473 to 1.476.

Optical rotation (*2.2.7*): + 57° to + 70°.

Absorbance (*2.2.25*). Dissolve 0.250 g of the substance to be examined in *alcohol R*, mix and dilute to 100.0 mL with the same solvent. Measure the absorbance over the range 260 nm to 400 nm. If a manual instrument is used, measure the absorbance at 5 nm intervals from 260 nm to about 12 nm before the expected absorption maximum, then at 3 nm intervals for 3 readings and at 1 nm intervals to about 5 nm beyond the maximum and finally at 10 nm intervals to 400 nm. Plot a curve representing the absorption spectrum with the absorbances as ordinates and the wavelengths as abscissae. Draw as a baseline the tangent between *A* and *B* (Figure 0620.-1). The absorption maximum *C* is situated at

315 ± 3 nm. From *C* draw a line perpendicular to the axis of abscissae and intersecting *AB* at *D*. Deduct the absorbance corresponding to point *D* from that corresponding to point *C*. The value *C* – *D* is 0.20 to 0.96 and for Italian-type lemon oil it is not less than 0.45.

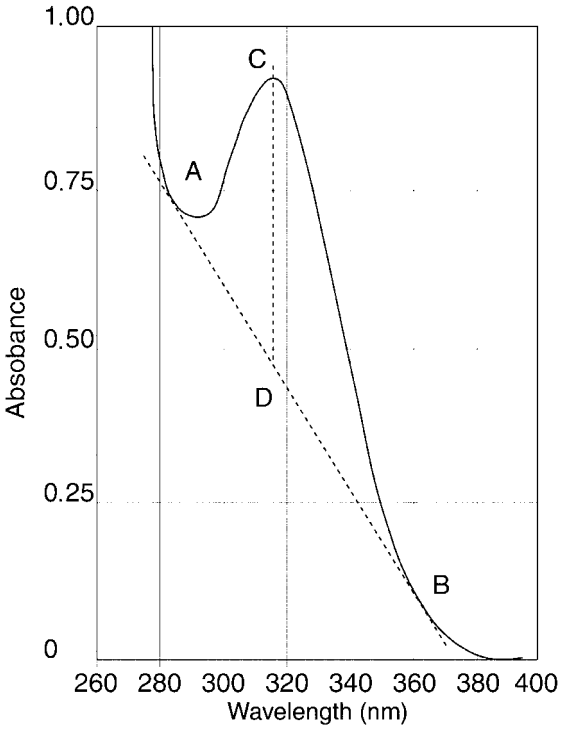

Figure 0620.-1. – *Typical spectrum of lemon oil for the test for absorbance*

Fatty oils and resinified essential oils (*2.8.7*). It complies with the test for fatty oils and resinified essential oils.

Chromatographic profile. Gas chromatography (*2.2.28*): use the normalisation procedure.

Test solution. The substance to be examined.

Reference solution. Dissolve 20 µL of *β-pinene R*, 10 µL of *sabinene R*, 100 µL of *limonene R*, 10 µL of *γ-terpinene R*, 5 µL of *β-caryophyllene R*, 20 µL of *citral R*, 5 µL of *α-terpineol R*, 5 µL of *neryl acetate R* and 5 µL of *geranyl acetate R* in 1 mL of *acetone R*.

Column:

- *material*: fused silica,
- *size*: *l* = 30 m (a film thickness of 1 µm may be used) to 60 m (a film thickness of 0.2 µm may be used), Ø = 0.25-0.53 mm,
- *stationary phase*: *macrogol 20 000 R*.

Carrier gas: *helium for chromatography R*.

Flow rate: 1.0 mL/min.

Split ratio: 1:100.

Temperature:

	Time (min)	Temperature (°C)
Column	0 - 6	45
	6 - 21	45 → 90
	21 - 39	90 → 180
	39 - 55	180
Injection port		220
Detector		220

Detection: flame ionisation.

Injection: 0.5 µL of the reference solution and 0.2 µL of the test solution.

Elution order: order indicated in the composition of the reference solution. Record the retention times of these substances.

System suitability: reference solution:

- *resolution*: minimum 1.5 between the peaks due to β-pinene and sabinene and minimum 1.5 between the peaks due to geranial and geranyl acetate.

Using the retention times determined from the chromatogram obtained with the reference solution, locate the components of the reference solution in the chromatogram obtained with the test solution.

Determine the percentage content of these components. The percentages are within the following ranges:

- *β-pinene*: 7.0 per cent to 17.0 per cent,
- *sabinene*: 1.0 per cent to 3.0 per cent,
- *limonene*: 56.0 per cent to 78.0 per cent,
- *γ-terpinene*: 6.0 per cent to 12.0 per cent,
- *β-caryophyllene*: maximum 0.5 per cent,
- *neral*: 0.3 per cent to 1.5 per cent,
- *α-terpineol*: maximum 0.6 per cent,
- *neryl acetate*: 0.2 per cent to 0.9 per cent,
- *geranial*: 0.5 per cent to 2.3 per cent,
- *geranyl acetate*: 0.1 per cent to 0.8 per cent.

Residue on evaporation (*2.8.9*): 1.8 per cent to 3.6 per cent after heating on the water-bath for 4 h.

STORAGE

At a temperature not exceeding 25 °C.

LABELLING

The label states, where applicable, that the contents are Italian-type lemon oil.

01/2012:1834

LEMON VERBENA LEAF

Verbenae citriodorae folium

DEFINITION

Whole or fragmented, dried leaves of *Aloysia citrodora* Paláu (syn. *Aloysia triphylla* (L'Hér.) Kuntze; *Verbena triphylla* L'Hér.; *Lippia citriodora* Kunth).

Content:

- *acteoside* ($C_{29}H_{36}O_{15}$; M_r 625): minimum 2.5 per cent, expressed as ferulic acid (dried drug);
- *essential oil*: minimum 3.0 mL/kg for the whole drug and minimum 2.0 mL/kg for the fragmented drug (dried drug).

CHARACTERS

After grinding, it has a characteristic odour reminiscent of lemon.

IDENTIFICATION

A. The leaves are simple with short petioles. They are narrow, lanceolate, and about 4 times longer than they are wide. The entire, slightly undulating margins are curled towards the upper surface. The upper surface is dark green and rough to the touch; the lower surface is paler green and shows a prominent midrib with secondary veins running to the margins.

B. Microscopic examination (*2.8.23*). The powder is light green. Examine under a microscope using *chloral hydrate solution R*. The powder shows the following diagnostic characters (Figure 1834.-1): fragments of the upper epidermis of the lamina in surface view [A, B, H], composed of polygonal cells with numerous short, unicellular, thick-walled cystolithic trichomes, each arising from a rosette of cells at the base and containing calcium

Herbal drugs

concretions (B), glandular trichomes with a unicellular stalk and a unicellular, globular head of variable size in surface view [Ha] and transverse section [D, F]; these fragments are usually accompanied by palisade parenchyma [Aa, Hb]; fragments of the lower epidermis of the lamina in surface view [E], covered by a striated cuticle and composed of cells more irregular and somewhat sinuous in outline, with abundant anomocytic stomata (*2.8.3*) [Ea] and numerous glandular trichomes in surface view [Eb] and/or their scars [Ec]; fragments of the lamina in transverse section [G] with 2 layers of palisade parenchyma [Ga] and spongy parenchyma [Gb]; lignified tissue from the veins [C].

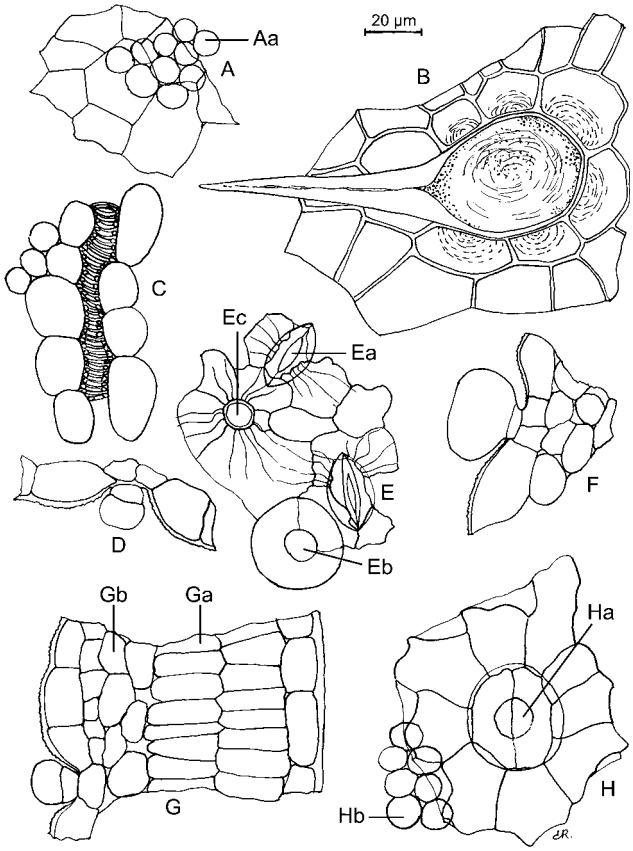

Figure 1834.-1. – *Illustration for identification test B of powdered herbal drug of lemon verbena leaf*

C. Examine the chromatograms obtained in the test for *Verbena officinalis*.

Results: see below the sequence of zones present in the chromatograms obtained with the reference solution and the test solution. Furthermore, other faint zones may be present in the chromatogram obtained with the test solution. Zones may be present in the chromatogram obtained with the test solution below the zone due to rutin in the chromatogram obtained with the reference solution.

Top of the plate	
	An intense greyish-green zone
Arbutin: a blue or brown zone	
Rutin: a dark brownish-yellow zone	A blue or violet zone
Reference solution	**Test solution**

TESTS

Verbena officinalis. Thin-layer chromatography (*2.2.27*).

Test solution. To 0.50 g of the powdered herbal drug (710) (*2.9.12*) add 5 mL of *methanol R*. Heat in a water-bath at 60 °C for 10 min. Cool and filter.

Reference solution. Dissolve 10 mg of *arbutin R* and 10 mg of *rutin R* in *methanol R* and dilute to 10 mL with the same solvent.

Plate: *TLC silica gel plate R* (5-40 µm) [or *TLC silica gel plate R* (2-10 µm)].

Mobile phase: *anhydrous formic acid R*, *glacial acetic acid R*, *water R*, *ethyl acetate R* (11:11:27:100 *V/V/V/V*).

Application: 20 µL [or 5 µL] as bands.

Development: over a path of about 12 cm [or 6 cm].

Drying: in air.

Detection: spray with *anisaldehyde solution R* and dry at 100-105 °C for about 10 min; examine in daylight.

Results: the chromatogram obtained with the test solution shows no brownish-grey zone at a position between that of arbutin and rutin in the chromatogram obtained with the reference solution.

Loss on drying (*2.2.32*): maximum 10.0 per cent, determined on 1.000 g of the powdered herbal drug (710) (*2.9.12*) by drying in an oven at 105 °C for 2 h.

Total ash (*2.4.16*): maximum 13.0 per cent.

Ash insoluble in hydrochloric acid (*2.8.1*): maximum 3.5 per cent.

ASSAY

Acteoside. Liquid chromatography (*2.2.29*).

Test solution. To 1.00 g of the powdered herbal drug (710) (*2.9.12*) add 50.0 mL of the reference solution and stir for 2 h with a magnetic stirrer. Centrifuge for 15 min and pass the supernatant through a membrane filter (nominal pore size 0.45 µm).

Reference solution. Dissolve 10.0 mg of *ferulic acid CRS* in *ethanol (60 per cent V/V) R* and dilute to 100.0 mL with the same solvent.

Precolumn:

- *size*: *l* = 0.01 m, Ø = 4.0 mm;
- *stationary phase*: *octadecylsilyl silica gel for chromatography R* (5 µm).

Column:

- *size*: *l* = 0.25 m, Ø = 4.0 mm;
- *stationary phase*: *octadecylsilyl silica gel for chromatography R* (5 µm);
- *temperature*: 20 °C.

Mobile phase:

- *mobile phase A*: 0.3 per cent *V/V* solution of *phosphoric acid R*;
- *mobile phase B*: *acetonitrile R*;

Time (min)	Mobile phase A (per cent *V/V*)	Mobile phase B (per cent *V/V*)
0 - 20	93 → 83	7 → 17
20 - 30	83	17
30 - 35	83 → 75	17 → 25
35 - 40	75 → 20	25 → 80
40 - 45	20 → 93	80 → 7

Flow rate: 1.0 mL/min.

Detection: spectrophotometer at 330 nm.

Injection: 20 µL.

System suitability: test solution:

– *resolution*: minimum 3.5 between the peaks due to ferulic acid and acteoside.

Calculate the percentage content of acteoside, expressed as ferulic acid, using the following expression:

$$\frac{A_1 \times m_2 \times p \times 0.5 \times 3.1}{A_2 \times m_1}$$

A_1 = area of the peak due to acteoside in the chromatogram obtained with the test solution;

A_2 = area of the peak due to ferulic acid in the chromatogram obtained with the reference solution;

m_1 = mass of the herbal drug in the test solution, in grams;

m_2 = mass of *ferulic acid CRS* in the reference solution, in grams;

p = percentage content of ferulic acid in *ferulic acid CRS*;

3.1 = correlation factor between acteoside and ferulic acid.

Essential oil (*2.8.12*). Introduce 25.0 g of the freshly crushed herbal drug into a 1000 mL flask and add 500 mL of a 10 g/L solution of *sodium chloride R* as the distillation liquid. Use 0.50 mL of *xylene R* in the graduated tube. Distil at a rate of 3.0-3.5 mL/min for 3 h.

01/2008:0957
corrected 6.0

LIME FLOWER

Tiliae flos

DEFINITION

Whole, dried inflorescence of *Tilia cordata* Miller, of *Tilia platyphyllos* Scop., of *Tilia ×vulgaris* Heyne or a mixture of these.

CHARACTERS

Faint aromatic odour.

Faint, sweet and mucilaginous taste.

IDENTIFICATION

A. The inflorescence is yellowish-green. The main axis of the inflorescence bears a linguiform bract, membranous, yellowish-green, practically glabrous, the central vein of which is joined for up to about half of its length with the peduncle. The inflorescence usually consists of 2-7 flowers, occasionally up to 16. The sepals are detached easily from the perianth; they are up to 6 mm long, their abaxial surface is usually glabrous, their adaxial surface and their borders are strongly pubescent. The 5 spatulate, thin petals are yellowish-white, up to 8 mm long. They show fine venation and their borders only are sometimes covered with isolated trichomes. The numerous stamens are free and usually constitute 5 groups. The superior ovary has a pistil with a somewhat 5-lobate stigma.

B. Separate the inflorescence into its different parts. Examine under a microscope using *chloral hydrate solution R*. The adaxial epidermis of the bract shows cells with straight or slightly sinuous anticlinal walls; the abaxial epidermis shows cells with wavy-sinuous anticlinal walls and anomocytic stomata (*2.8.3*). Isolated cells in the mesophyll contain small calcium oxalate cluster crystals. The parenchyma of the sepals shows, particularly near the veins, numerous mucilaginous cells and cells containing small calcium oxalate clusters. The adaxial epidermis of sepals bears bent, thick-walled covering trichomes, unicellular or stellate with up to 5 cells. The epidermal cells of the petals show straight anticlinal walls with a striated cuticle without stomata. The parenchyma of the petals shows small calcium oxalate clusters and especially in its acuminate part mucilaginous cells. The pollen grains have a diameter of about 30-40 µm and are oval or slightly triangular with 3 germinal pores and a finely granulated exine. The ovary is glabrous or densely covered with trichomes, often very twisted, unicellular or stellate with 2-4 branches.

C. Thin-layer chromatography (*2.2.27*).

Test solution. Shake 1.0 g of the powdered herbal drug (355) (*2.9.12*) with 10 mL of *methanol R* in a water-bath at 65 °C for 5 min. Allow to cool and filter.

Reference solution. Dissolve 2.0 mg of *caffeic acid R*, 5 mg of *hyperoside R* and 5 mg of *rutin R* in 10 mL of *methanol R*.

Plate: *TLC silica gel plate R*.

Mobile phase: *anhydrous formic acid R*, *water R*, *methyl ethyl ketone R*, *ethyl acetate R* (10:10:30:50 *V/V/V/V*).

Application: 10 µL, as bands.

Development: over a path of 15 cm.

Drying: at 100-105 °C.

Detection: spray the warm plate with a 10 g/L solution of *diphenylboric acid aminoethyl ester R* in *methanol R*. Then spray with a 50 g/L solution of *macrogol 400 R* in *methanol R*. Allow to dry for about 30 min and examine in ultraviolet light at 365 nm.

Results: the chromatogram obtained with the reference solution shows in order of increasing R_F value yellowish-orange or brownish-orange fluorescent zones due to rutin and hyperoside and a greenish-blue fluorescent zone due to caffeic acid. In the chromatogram obtained with the test solution, the main zone shows brownish-yellow or orange fluorescence. This zone is situated just above the zone due to hyperoside in the chromatogram obtained with the reference solution. In daylight, this zone stands out from the other zones as the main zone. At the R_F level of rutin there is also a brownish-yellow fluorescent zone. Below this zone, 2 yellow fluorescent zones may be present. Between the zones due to rutin and hyperoside, orange and yellow fluorescent zones are visible. Between the zones due to hyperoside and caffeic acid, up to 5 yellow or orange fluorescent zones are present. Immediately below the zone due to caffeic acid is a a blue fluorescent zone.

TESTS

Foreign matter (*2.8.2*): maximum 2 per cent, determined on 30 g. There are no inflorescences with a bract bearing at the abaxial face stellate, five- to eight-rayed trichomes and flowers having an apparent double corolla by transformation of five stamens into petal-like staminoids and having a pistil which is not lobular nor indented. Hexamerous flowers occur only occasionally (*Tilia americana* L., *Tilia tomentosa* Moench).

Loss on drying (*2.2.32*): maximum 12.0 per cent, determined on 1.000 g of the powdered herbal drug (355) (*2.9.12*) by drying in an oven at 105 °C for 2 h.

Total ash (*2.4.16*): maximum 8.0 per cent.

04/2011:0095

LINSEED

Lini semen

DEFINITION

Dried, ripe seeds of *Linum usitatissimum* L.

IDENTIFICATION

A. The seed has a flattened, elongated ovoid shape. The testa is dark reddish-brown or yellow, smooth and shiny. The seeds are 4-6 mm long, 2-3 mm wide and 1.5-2 mm thick;

Herbal drugs

one end is rounded and the other end forms an oblique point near which the hilum appears as a slight depression. When viewed with a lens, the surface of the seed-coat is seen to be minutely pitted. Inside the testa a narrow, whitish endosperm and an embryo composed of 2 large, flattened, yellowish and oily cotyledons are present; the radicle points towards the hilum.

B. Microscopic examination (*2.8.23*). The powder is greasy to the touch. Examine under a microscope using *chloral hydrate solution R*. The powder shows the following diagnostic characters (Figure 0095.-1): fragments of the outer testa [A, B] with cells that are polygonal in surface view [Aa] or narrow in transverse section [Ba], and filled with mucilage [Bb]; fragments of the collenchymatously thickened sub-epidermal layer, in transverse section [Bc], or in surface view [Ab] with rounded cells with triangular intercellular spaces often attached to the sclerenchymatous layer composed of elongated cells, with thickened and pitted walls [Ca], some with strongly thickened and pitted walls [G]; fragments, in surface view [C], consisting of the hyaline layer with thin-walled cells [Cb] often remaining attached to the layer of elongated sclereids and crossing them at approximately right angles [Ca]; fragments of the inner testa, in surface view [D], composed of moderately thickened polygonal cells filled with brown-orange pigment; small polyhedral masses of pigment [H]; numerous fragments of parenchyma from the testae, with large, slightly and regularly thickened cells, in surface view [J, L]; parenchyma of the endosperm [K] and cotyledons [E] containing aleurone grains and oil droplets; very numerous isolated oil droplets [F].

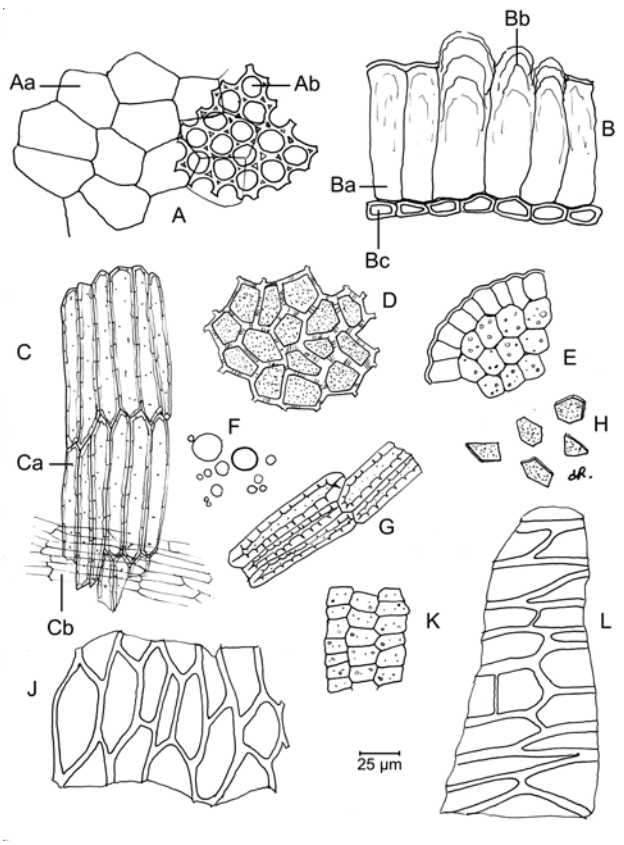

Figure 0095.-1. – *Illustration for identification test B of powdered herbal drug of linseed*

TESTS

Foreign matter (*2.8.2*): maximum 10 per cent of seeds with a dull coat and maximum 1.5 per cent of other foreign matter.

Swelling index (*2.8.4*): minimum 4.

Cadmium (*2.4.27*): maximum 0.5 ppm.

Loss on drying (*2.2.32*): maximum 8.0 per cent, determined on 1.000 g of the powdered herbal drug (355) (*2.9.12*) by drying in an oven at 105 °C for 2 h.

Total ash (*2.4.16*): maximum 5.0 per cent.

01/2012:2378

LIQUORICE DRY EXTRACT FOR FLAVOURING PURPOSES

Liquiritiae extractum siccum ad saporandum

DEFINITION

Dry extract produced from *Liquorice root (0277)*.

Content: 5.0 per cent to 7.0 per cent of 18β-glycyrrhizic acid ($C_{42}H_{62}O_{16}$; M_r 823) (dried extract).

PRODUCTION

The extract is produced from the cut herbal drug by a suitable procedure using water.

CHARACTERS

Appearance: yellowish-brown or brown powder.

Very sweet taste.

IDENTIFICATION

Thin-layer chromatography (*2.2.27*).

Solvent mixture: *ethyl acetate R*, *methanol R* (50:50 *V/V*).

Test solution. To 0.30 g of the extract to be examined add 30 mL of *hydrochloric acid R1* and boil on a water-bath under a reflux condenser for 60 min. After cooling, extract the mixture with 2 quantities, each of 20 mL, of *ethyl acetate R*. Combine the organic layers and filter through a filter covered with *anhydrous sodium sulfate R*. Evaporate the filtrate to dryness *in vacuo* and dissolve the residue in 2.0 mL of the solvent mixture.

Reference solution. Dissolve 5.0 mg of *glycyrrhetic acid R* and 5.0 mg of *thymol R* in 5.0 mL of the solvent mixture.

Plate: *TLC silica gel F_{254} plate R* (5-40 µm) [or *TLC silica gel F_{254} plate R* (2-10 µm)].

Mobile phase: *concentrated ammonia R*, *water R*, *ethanol (96 per cent) R*, *ethyl acetate R* (1:9:25:65 *V/V/V/V*).

Application: 20 µL [or 10 µL] as bands.

Development: over a path of 15 cm [or 7 cm].

Drying: in air for 5 min.

Detection: spray with *anisaldehyde solution R* and heat at 100-105 °C for 5-10 min; examine in daylight.

Results: see below the sequence of zones present in the chromatograms obtained with the reference solution and the test solution. Furthermore, other faint zones may be present in the chromatogram obtained with the test solution.

Top of the plate	
Thymol: a red zone	A yellow zone
Glycyrrhetic acid: a violet zone	A violet zone (glycyrrhetic acid)
Reference solution	**Test solution**

TESTS

Loss on drying (*2.8.17*): maximum 7.0 per cent.

Ochratoxin A (*2.8.22*): maximum 80 µg per kilogram of extract.

The maximum content applies to the pure undiluted extract. Where excipients are added to reduce the strength of the extract, the maximum content should be reduced proportionally.

ASSAY

Liquid chromatography (*2.2.29*).

Solvent mixture: *water R*, *methanol R* (20:80 *V/V*).

Test solution. Place 0.200 g of the extract to be examined in a 150 mL ground-glass conical flask. Add 100.0 mL of the solvent mixture and sonicate for 2 min. Filter through a membrane filter (nominal pore size 0.45 µm).

Reference solution. Dissolve 50.0 mg of *monoammonium glycyrrhizate CRS* in the solvent mixture and dilute to 50.0 mL with the solvent mixture. Dilute 1.0 mL of this solution to 10.0 mL with the solvent mixture.

Column:

- *size*: *l* = 0.10 m, Ø = 4.0 mm;
- *stationary phase*: *octadecylsilyl silica gel for chromatography R* (5 µm).

Mobile phase: *glacial acetic acid R*, *acetonitrile R*, *water R* (6:30:64 *V/V/V*).

Flow rate: 1.5 mL/min.

Detection: spectrophotometer at 254 nm.

Injection: 10 µL.

Run time: 3 times the retention time of 18β-glycyrrhizic acid.

Retention time: 18β-glycyrrhizic acid = about 9 min.

Identification of peaks: use the chromatogram supplied with *monoammonium glycyrrhizate CRS* and the chromatogram obtained with the reference solution to identify the peaks due to 18β-glycyrrhizic acid and 18α-glycyrrhizic acid.

System suitability: reference solution:

- the chromatogram obtained with the reference solution is similar to the chromatogram supplied with *monoammonium glycyrrhizate CRS*;
- *resolution*: minimum 2.0 between the peaks due to 18β-glycyrrhizic acid and 18α-glycyrrhizic acid.

Calculate the percentage content of 18β-glycyrrhizic acid, using the following expression:

$$\frac{A_1 \times m_2 \times p \times 0.979}{A_2 \times m_1 \times 5}$$

A_1	=	area of the peak due to 18β-glycyrrhizic acid in the chromatogram obtained with the test solution;
A_2	=	area of the peak due to 18β-glycyrrhizic acid in the chromatogram obtained with the reference solution;
m_1	=	mass of the extract to be examined used to prepare the test solution, in grams;
m_2	=	mass of *monoammonium glycyrrhizate CRS* used to prepare the reference solution, in grams;
p	=	percentage content of 18β-glycyrrhizic acid in *monoammonium glycyrrhizate CRS*;
0.979	=	peak correlation factor between 18β-glycyrrhizic acid and monoammonium glycyrrhizate.

01/2012:1536

LIQUORICE ETHANOLIC LIQUID EXTRACT, STANDARDISED

Liquiritiae extractum fluidum ethanolicum normatum

DEFINITION

Standardised ethanolic liquid extract produced from *Liquorice root (0277)*.

Content: 3.0 per cent to 5.0 per cent of 18β-glycyrrhizic acid ($C_{42}H_{62}O_{16}$; M_r 823).

PRODUCTION

The extract is produced from the herbal drug by a suitable procedure for liquid extracts using ethanol (70 per cent *V/V*).

CHARACTERS

Appearance: dark brown, clear liquid.

It has a faint characteristic odour and a sweet taste.

IDENTIFICATION

Thin-layer chromatography (*2.2.27*).

Test solution. Place 1.0 g of the extract to be examined in a 50 mL round-bottomed flask, add 16.0 mL of *water R* and 4.0 mL of *hydrochloric acid R1* and heat on a water-bath under a reflux condenser for 30 min. Allow to cool and filter. Dry the filter and the round-bottomed flask at 105 °C for 60 min. Transfer the filter to the round-bottomed flask, add 20 mL of *ether R* and heat in a water-bath at 40 °C under a reflux condenser for 5 min. Allow to cool and filter. Evaporate the filtrate to dryness and dissolve the residue in 5.0 mL of *ether R*.

Reference solution. Dissolve 5.0 mg of *glycyrrhetic acid R* and 5.0 mg of *thymol R* in 5 mL of *ether R*.

Plate: *TLC silica gel F_{254} plate R*.

Mobile phase: *concentrated ammonia R*, *water R*, *ethanol (96 per cent) R*, *ethyl acetate R* (1:9:25:65 *V/V/V/V*).

Application: 10 µL as bands.

Development: over a path of 15 cm.

Drying: in air for 5 min.

Detection A: examine in ultraviolet light at 254 nm.

Results A: the chromatograms obtained with the test solution and the reference solution show in the lower half a quenching zone due to glycyrrhetic acid.

Detection B: treat with *anisaldehyde solution R*; heat at 100-105 °C for 5-10 min and examine in daylight.

Results B: the chromatogram obtained with the reference solution shows in the lower half a violet zone (glycyrrhetic acid), and in the upper third a red zone (thymol); the chromatogram obtained with the test solution shows in the lower half a violet zone corresponding to glycyrrhetic acid in the chromatogram obtained with the reference solution, and in the upper third, below the zone of thymol in the chromatogram obtained with the reference solution, a yellow zone due to isoliquiritigenin; further zones are present.

TESTS

Ethanol (*2.9.10*): 52 per cent *V/V* to 65 per cent *V/V*.

Methanol and 2-propanol (*2.9.11*): maximum 0.05 per cent *V/V* of methanol and maximum 0.05 per cent *V/V* of 2-propanol.

Ochratoxin A (*2.8.22*): maximum 80 µg per kilogram of extract.

ASSAY

Liquid chromatography (*2.2.29*).

Solvent mixture: *dilute ammonia R1*, *water R* (8:92 *V/V*).

Herbal drugs

Test solution. Dilute 1.000 g of the extract to be examined to 100 mL with the solvent mixture and centrifuge. Dilute 2.0 mL of the supernatant to 10.0 mL with the solvent mixture.

Solution A. Dissolve 0.130 g of *monoammonium glycyrrhizate CRS* in the solvent mixture and dilute to 100.0 mL with the solvent mixture.

Reference solution (a). Dilute 5.0 mL of solution A to 100.0 mL with the solvent mixture.

Reference solution (b). Dilute 10.0 mL of solution A to 100.0 mL with the solvent mixture.

Reference solution (c). Dilute 15.0 mL of solution A to 100.0 mL with the solvent mixture.

Column:

- *size*: *l* = 0.10 m, Ø = 4 mm;
- *stationary phase*: *octadecylsilyl silica gel for chromatography R* (5 µm).

Mobile phase: *glacial acetic acid R*, *acetonitrile R*, *water R* (6:30:64 *V/V/V*).

Flow rate: 1.5 mL/min.

Detection: spectrophotometer at 254 nm.

Injection: 10 µL.

Establish a calibration curve with the mass of monoammonium glycyrrhizate in the reference solutions, in grams, as the abscissa and the corresponding peak areas as the ordinate.

Using the retention times and the peak areas determined from the chromatograms obtained with the reference solutions, locate and integrate the peak due to 18β-glycyrrhizic acid in the chromatogram obtained with the test solution.

Calculate the percentage content of 18β-glycyrrhizic acid using the following expression:

$$A \times \frac{5}{m} \times B \times \frac{823}{840}$$

A	=	mass equivalent of monoammonium glycyrrhizate in the test solution, determined from the calibration curve, in grams;
B	=	declared percentage content of *monoammonium glycyrrhizate CRS*;
m	=	mass of the extract to be examined used to prepare the test solution, in grams;
823	=	molecular mass of 18β-glycyrrhizic acid;
840	=	molecular mass of monoammonium glycyrrhizate (without any water of crystallisation).

01/2012:0277

LIQUORICE ROOT

Liquiritiae radix

DEFINITION

Dried, unpeeled or peeled, whole or cut root and stolons of *Glycyrrhiza glabra* L. and/or of *Glycyrrhiza inflata* Bat. and/or *Glycyrrhiza uralensis* Fisch.

Content: minimum 4.0 per cent of 18β-glycyrrhizic acid ($C_{42}H_{62}O_{16}$; M_r 823) (dried drug).

IDENTIFICATION

A. The root has few branches. Its bark is brown or brownish-grey with longitudinal striations and bears traces of lateral roots. The cylindrical stolons are 1-2 cm in diameter; their external appearance is similar to that of the root but there are occasional small buds. The fracture of the root and the stolon is granular and fibrous. The cork layer is thin; the secondary phloem region is thick and light yellow with radial striations. The yellow xylem cylinder is compact, with a radiate structure. The stolon has a central pith, which is absent from the root. The external part of the bark is absent from the peeled root.

B. Microscopic examination (*2.8.23*). The powder is light yellow or faintly greyish. Examine under a microscope using *chloral hydrate solution R*. The powder shows the following diagnostic characters: fragments of yellow thick-walled fibres, 700-1200 µm long and 10-20 µm wide with a punctiform lumen, often accompanied by crystal sheaths containing prisms of calcium oxalate 10-35 µm long and 2-5 µm wide. The walls of the vessels are yellow, 5-10 µm thick, lignified and have numerous bordered pits with a slit-shaped aperture; fragments of cork consisting of thin-walled cells and isolated prisms of calcium oxalate occur as well as fragments of parenchymatous tissue. Fragments of cork are absent from the peeled root. Examine under a microscope using a mixture of equal volumes of *glycerol R* and *water R*. The powder shows the following diagnostic characters: simple, round or oval starch granules, 2-20 µm in diameter.

C. Thin-layer chromatography (*2.2.27*).

Test solution. To 0.50 g of the powdered herbal drug (180) (*2.9.12*) in a 50 mL round-bottomed flask add 16.0 mL of *water R* and 4.0 mL of *hydrochloric acid R1* and heat on a water-bath under a reflux condenser for 30 min. Cool and filter. Dry the filter and the round-bottomed flask at 105 °C for 60 min. Place the filter in the round-bottomed flask, add 20.0 mL of *ether R* and heat in a water-bath at 40 °C under a reflux condenser for 5 min. Cool and filter. Evaporate the filtrate to dryness. Dissolve the residue in 5.0 mL of *ether R*.

Reference solution. Dissolve 5.0 mg of *glycyrrhetic acid R* and 5.0 mg of *thymol R* in 5.0 mL of *ether R*.

Plate: *TLC silica gel F_{254} plate R*.

Mobile phase: *concentrated ammonia R*, *water R*, *ethanol (96 per cent) R*, *ethyl acetate R* (1:9:25:65 *V/V/V/V*).

Application: 10 µL.

Development: over a path of 15 cm.

Drying: in air for 5 min.

Detection A: examine in ultraviolet light at 254 nm.

Results A: the chromatograms obtained with the test solution and the reference solution show in the lower half a quenching zone due to glycyrrhetic acid.

Detection B: treat with *anisaldehyde solution R*, and heat at 100-105 °C for 5-10 min; examine in daylight.

Results B: the chromatogram obtained with the reference solution shows in the lower half a violet zone due to glycyrrhetic acid and in the upper third a red zone due to thymol. The chromatogram obtained with the test solution shows in the lower half a violet zone corresponding to the zone of glycyrrhetic acid in the chromatogram obtained with the reference solution and a yellow zone (isoliquiridigenine) in the upper third under the zone of thymol in the chromatogram obtained with the reference solution. Further zones may be present.

TESTS

Loss on drying (*2.2.32*): maximum 10.0 per cent, determined on 1.000 g of the powdered herbal drug (355) (*2.9.12*) by drying in an oven at 105 °C for 2 h.

Total ash (*2.4.16*): maximum 10.0 per cent for the unpeeled drug and maximum 6.0 per cent for the peeled drug.

Ash insoluble in hydrochloric acid (*2.8.1*): maximum 2.0 per cent for the unpeeled drug and maximum 0.5 per cent for the peeled drug.

Ochratoxin A (*2.8.22*): maximum 20 µg per kilogram of herbal drug.

ASSAY

Liquid chromatography (*2.2.29*).

Test solution. Place 1.000 g of the powdered herbal drug (180) (*2.9.12*) in a 150 mL ground-glass conical flask. Add 100.0 mL of an 8 g/L solution of *ammonia R* and treat in an ultrasonic bath for 30 min. Centrifuge a part of the solution and dilute 1.0 mL of the supernatant layer to 5.0 mL with an 8 g/L solution of *ammonia R*. Filter through a membrane filter (nominal pore size 0.45 µm); use the filtrate as the test solution.

Solution A. Dissolve 0.130 g of *monoammonium glycyrrhizate CRS* in an 8 g/L solution of *ammonia R* and dilute to 100.0 mL with the same solvent.

Reference solution (a). Dilute 5.0 mL of solution A to 100.0 mL with an 8 g/L solution of *ammonia R*.

Reference solution (b). Dilute 10.0 mL of solution A to 100.0 mL with an 8 g/L solution of *ammonia R*.

Reference solution (c). Dilute 15.0 mL of solution A to 100.0 mL with an 8 g/L solution of *ammonia R*.

Column:

- *size*: *l* = 0.10 m, Ø = 4 mm;
- *stationary phase*: *octadecylsilyl silica gel for chromatography R* (5 µm).

Mobile phase: *glacial acetic acid R*, *acetonitrile R*, *water R* (6:30:64 *V/V/V*).

Flow rate: 1.5 mL/min.

Detection: spectrophotometer at 254 nm.

Injection: 10 µL.

Establish a calibration curve with the mass of monoammonium glycyrrhizate in the reference solutions, in grams, as the abscissa and the corresponding peak areas as the ordinate.

Using the retention times and the peak areas determined from the chromatograms obtained with the reference solutions, locate and integrate the peak due to 18β-glycyrrhizic acid in the chromatogram obtained with the test solution.

Calculate the percentage content of 18β-glycyrrhizic acid using the following expression:

$$A \times \frac{5}{m} \times B \times \frac{823}{840}$$

A	=	mass equivalent of monoammonium glycyrrhizate in the test solution, determined from the calibration curve, in grams;
B	=	declared percentage content of *monoammonium glycyrrhizate CRS*;
m	=	mass of the herbal drug to be examined used to prepare the test solution, in grams;
823	=	molecular mass of 18β-glycyrrhizic acid;
840	=	molecular mass of monoammonium glycyrrhizate (without any water of crystallisation).

LABELLING

The label states whether the drug is peeled or unpeeled.

01/2013:2453
corrected 7.8

LONG PEPPER

Piperis longi fructus

DEFINITION

Dried, ripe or nearly ripe fruiting spikes of *Piper longum* L. or *Piper retrofractum* Vahl (syn. *P. chaba* Hunter and *P. officinarum* (Miq.) C.DC.) or a mixture of both species.

Content:

- *essential oil*: minimum 6.0 mL/kg (dried drug);
- *piperine* ($C_{17}H_{19}NO_3$; M_r 285.3): minimum 3.0 per cent (dried drug).

IDENTIFICATION

A. *P. longum.* The fruiting spikes are cylindrical or irregularly cylindrical, 1-2.5 cm long (rarely longer than 2.5 cm), 3-5 mm in diameter, blackish-brown or almost black. The spikes are quite compact, tough, composed of small fruits firmly fixed on the receptacle in regular or oblique rows. The berries are spherical, about 1 mm in diameter. The bracts are black, small, punctiform, confined to depressions between adjacent berries. The remains of the peduncle may be present at the base of the cylinder. Spikes can be easily broken; the fracture is irregular and granular.

P. retrofractum. The fruiting spikes are similar to those of *P. longum* but clearly more robust, straight and cylindrical, 2.5-4 cm long (rarely smaller than 2.5 cm), 5-8 mm in diameter, brown or reddish-brown. The berries are also firmly fixed on the receptacle but, in contrast to those of *P. longum*, arranged more obviously in spiral rows. The bracts are more prominent than those of *P. longum*.

B. Microscopic examination (*2.8.23*). The powder is greyish-beige. Examine under a microscope using *chloral hydrate solution R*. The powder shows the following diagnostic characters: fragments of the endocarp in surface view, consisting of more or less elongated sclereids about 75 µm long, which have irregularly thickened walls and wide channels and which are sometimes associated with the brown pigment layer of the testa; fragments of the endocarp, in transverse section, showing sclereids with thickened inner walls on the 3 lower sides, usually associated with the testa; fragments of the testa consisting of a layer of reddish-brown pigmented cells and a layer of very thin-walled polygonal cells constituting the 'hyaline layer'; fragments of the parenchyma of the mesocarp containing more or less polygonal sclereids, isolated or in groups, and oil cells about 50 µm in diameter; numerous thin-walled, ovoid or polygonal cells of the parenchyma of the seed; fragments of the epicarp with extremely thin-walled, reddish-brown pigmented cells associated with the outer layers of the mesocarp consisting of groups of sclereids with strongly thickened walls; rare, elongated sclereids about 400 µm long with slightly thickened walls, from the centre of the spike; a few fragments of vascular tissue with spiral or striated vessels. Examine under a microscope using a 50 per cent *V/V* solution of *glycerol R*. Rounded, compound starch granules about 20 µm in diameter made up of tiny individual granules, ovoid or polyhedral by compression, free or included in the parenchymatous cells of the seed.

C. Thin-layer chromatography (*2.2.27*).

Test solution. To 0.5 g of the powdered herbal drug (355) (*2.9.12*) add 5 mL of *methanol R*. Sonicate for 10 min, centrifuge and use the supernatant.

Reference solution. Dissolve 10 mg of *borneol R* and 15 mg of *piperine R* in 10 mL of *methanol R*.

Plate: *TLC silica gel F_{254} plate R* (5-40 µm) [or *TLC silica gel F_{254} plate R* (2-10 µm)].

Mobile phase: *ethyl acetate R*, *cyclohexane R* (30:50 *V/V*).

Application: 10 µL [or 5 µL] as bands of 10 mm [or 8 mm].

Development: over a path of 15 cm [or 6 cm].

Drying: in air.

Detection A: examine in ultraviolet light at 254 nm.

Results A: see below the sequence of zones present in the chromatograms obtained with the reference solution and the test solution. Furthermore, other faint quenching zones may be present in the chromatogram obtained with the test solution.

Top of the plate	
———	———
	2 strong quenching zones
	A quenching zone
———	———
	A quenching zone
Piperine: a quenching zone	A strong quenching zone (piperine)
Reference solution	**Test solution**

Detection B: treat with *anisaldehyde solution R* and heat at 100 °C for 5 min; examine in daylight.

Results B: see below the sequence of zones present in the chromatograms obtained with the reference solution and the test solution. Furthermore, other zones may be present in the chromatogram obtained with the test solution.

Top of the plate	
	A purple-grey zone
———	———
	A purple zone
Borneol: a yellowish-brown zone	A violet zone
	A purple-grey zone
———	———
Piperine: a green or brownish zone	A green or brownish zone (piperine)
Reference solution	**Test solution**

TESTS

Foreign matter (*2.8.2*): maximum 3 per cent.

Loss on drying (*2.2.32*): maximum 11.0 per cent, determined on 1.000 g of the freshly powdered herbal drug (355) (*2.9.12*) by drying in an oven at 105 °C for 2 h.

Total ash (*2.4.16*): maximum 5.0 per cent.

ASSAY

Essential oil (*2.8.12*). Use 25.0 g of the freshly, coarsely powdered herbal drug (1400) (*2.9.12*), a 1000 mL round-bottomed flask, 400 mL of *water R* as the distillation liquid and 0.5 mL of *xylene R* in the graduated tube. Distil at a rate of 2-3 mL/min for 3 h.

Piperine. Liquid chromatography (*2.2.29*). *Carry out the assay protected from light.*

Test solution. Disperse 0.250 g of the powdered herbal drug (355) (*2.9.12*) in 40 mL of *ethanol (96 per cent) R*. Sonicate for 20 min and filter. Rinse the flask and the filter with 5 mL of *ethanol (96 per cent) R*, combine the filtrate and washings and dilute to 50.0 mL with the same solvent. Filter through a membrane filter (nominal pore size 0.45 µm).

Reference solution (a). Dissolve 15.0 mg of *piperine CRS* in *ethanol (96 per cent) R* and dilute to 100.0 mL with the same solvent.

Reference solution (b). Disperse 0.250 g of *long pepper for system suitability HRS* (355) (*2.9.12*) in 40 mL of *ethanol (96 per cent) R*. Sonicate for 20 min and filter. Rinse the flask and the filter with 5 mL of *ethanol (96 per cent) R*, combine the filtrate and washings and dilute to 50.0 mL with the same solvent. Filter through a membrane filter (nominal pore size 0.45 µm).

Column:
- *size*: *l* = 0.15 m, Ø = 4.6 mm;
- *stationary phase*: *end-capped octadecylsilyl silica gel for chromatography R* (5 µm).

Mobile phase:
- *mobile phase A*: *water R*;
- *mobile phase B*: *acetonitrile R*;

Time (min)	Mobile phase A (per cent *V/V*)	Mobile phase B (per cent *V/V*)
0 - 5	50	50
5 - 20	50 → 5	50 → 95
20 - 22	5 → 0	95 → 100

Flow rate: 1.0 mL/min.

Detection: spectrophotometer at 343 nm.

Injection: 10 µL.

Retention time: piperine = about 10 min.

Identification of peaks: use the chromatogram supplied with *long pepper for system suitability HRS* and the chromatogram obtained with reference solution (b) to identify the peak due to piperine and peak 2.

System suitability: reference solution (b):
- *peak-to-valley ratio*: minimum 4, where H_p = height above the baseline of peak 2 and H_v = height above the baseline of the lowest point of the curve separating the peak due to piperine from peak 2.

Calculate the percentage content of piperine using the following expression:

$$\frac{A_1 \times m_2 \times p}{A_2 \times m_1 \times 2}$$

A_1 = area of the peak due to piperine in the chromatogram obtained with the test solution;

A_2 = area of the peak due to piperine in the chromatogram obtained with reference solution (a);

m_1 = mass of the herbal drug to be examined used to prepare the test solution, in grams;

m_2 = mass of *piperine CRS* used to prepare reference solution (a), in grams;

p = percentage content of piperine in *piperine CRS*.

04/2013:1537

LOOSESTRIFE

Lythri herba

DEFINITION

Dried flowering tops, whole or cut, of *Lythrum salicaria* L.

Content: minimum 5.0 per cent of tannins, expressed as pyrogallol ($C_6H_6O_3$; M_r 126.1) (dried drug).

IDENTIFICATION

A. The stems are rigid, 4-angled, branching at the top, brownish-green, longitudinally wrinkled and pubescent. The leaves are opposite, decussate, rarely verticillate in threes and sometimes alternate at the inflorescence which forms a long terminal spike. The leaves are sessile, lanceolate and cordate at the base, 5-15 cm long and 1-2.5 cm wide, pubescent on the lower surface; the subsidiary veins form arcs that anastomose near the leaf margin. The flowers have a pubescent, tubular, persistent gamosepalous calyx, 4-8 mm long, consisting of 6 sepals bearing 6 small, triangular teeth alternating with 6 large, acute teeth at least half as long as the tube; a polypetalous

Herbal drugs

corolla consisting of 6 violet-pink petals, each expanded at the top with a wavy outline and narrowing at the base. The androecium consists of 2 verticils of 6 stamens (1 verticil with short, barely emerging stamens, the other with long stamens extending well out of the corolla). The fruit, if formed, is a small capsule included in the persistent calyx.

B. Microscopic examination (*2.8.23*). The powder is greenish-yellow. Examine under a microscope using *chloral hydrate solution R*. The powder shows the following diagnostic characters (Figure 1537.-1): unicellular [Ea] or bicellular [Aa], uniseriate, thick-walled, finely pitted covering trichomes from the epidermis of the leaf [A] and stem [E]; numerous uniseriate, unicellular [Ga] or bicellular [Gb], thin-walled, finely pitted, annularly striated covering trichomes from the calyx, in side view [G]; transparent violet-pink fragments from the petals [F] consisting of epidermal cells with sinuous walls and a grainy cuticle [Fa], covering fine spiral vessels [Fb]; fragments of parenchyma from the leaf [D] with numerous cells containing cluster crystals of calcium oxalate [Da], associated with spiral vessels [Db]; pollen grains with 3 pores and a thin and slightly granular exine [C]; fragments of the upper epidermis of the leaf [A] with large polygonal cells and sinuous walls, covered by a finely striated cuticle [Ab]; fragments of the lower epidermis of the leaf [B] with smaller polygonal cells [Ba] and anomocytic stomata [Bb] (*2.8.3*); fragments of the stem [E] consisting of polygonal cells with straight anticlinal walls and a striated cuticle [Eb].

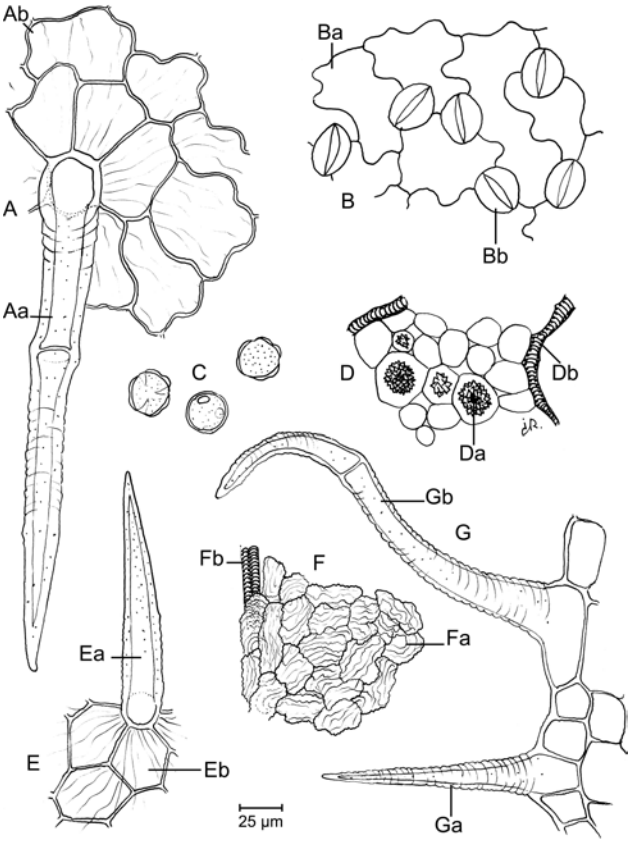

Figure 1537.-1. – *Illustration for identification test B of powdered herbal drug of loosestrife*

C. Thin-layer chromatography (*2.2.27*).

Test solution. To 1.0 g of the powdered herbal drug (355) (*2.9.12*) add 10 mL of *methanol R* and heat in a water-bath at 65 °C for 5 min with frequent shaking. Cool and filter. Dilute the filtrate to 10 mL with *methanol R*.

Reference solution. Dissolve 0.5 mg of *chlorogenic acid R*, 1 mg of *hyperoside R*, 1 mg of *rutin R* and 1 mg of *vitexin R* in 10 mL of *methanol R*.

Plate: *TLC silica gel plate R*.

Mobile phase: *anhydrous acetic acid R*, *anhydrous formic acid R*, *water R*, *ethyl acetate R* (7.5:7.5:18:67 *V/V/V/V*).

Application: 10 µL as bands.

Development: over a path of 15 cm.

Drying: at 100-105 °C.

Detection: treat the still-warm plate with a 10 g/L solution of *diphenylboric acid aminoethyl ester R* in *methanol R*. Subsequently treat with a 50 g/L solution of *macrogol 400 R* in *methanol R*. Allow to dry in air for 30 min and examine in ultraviolet light at 365 nm.

Results: the chromatogram obtained with the reference solution shows in the lower third a yellowish-brown fluorescent zone due to rutin and in the middle third a light blue fluorescent zone due to chlorogenic acid, above it a yellowish-brown fluorescent zone due to hyperoside and a green fluorescent zone due to vitexin. The chromatogram obtained with the test solution shows a bright green fluorescent zone slightly above the zone due to rutin in the chromatogram obtained with the reference solution, a yellow fluorescent zone similar in position to the zone due to chlorogenic acid in the chromatogram obtained with the reference solution, a yellow fluorescent zone similar in position to the zone due to hyperoside in the chromatogram obtained with the reference solution, and a bright green fluorescent zone corresponding to the zone due to vitexin in the chromatogram obtained with the reference solution.

TESTS

Loss on drying (*2.2.32*): maximum 12.0 per cent, determined on 1.000 g of the powdered herbal drug (355) (*2.9.12*) by drying in an oven at 105 °C.

Total ash (*2.4.16*): maximum 7.0 per cent.

ASSAY

Tannins (*2.8.14*). Use 0.750 g of the powdered herbal drug (180) (*2.9.12*).

01/2013:1233

LOVAGE ROOT

Levistici radix

DEFINITION

Whole or cut, dried rhizome and root of *Levisticum officinale* Koch.

Content: minimum 4.0 mL/kg of essential oil for the whole drug and minimum 3.0 mL/kg of essential oil for the cut drug (dried drug).

IDENTIFICATION

A. The rhizome and the large roots are often split longitudinally. The rhizome is short, up to 5 cm in diameter, light greyish-brown or yellowish-brown, simple or with several protuberances; the roots, showing little ramification, are the same colour as the rhizome; they are usually up to 1.5 cm thick and up to about 25 cm long; the fracture is usually smooth and shows a very wide yellowish-white bark and a narrow brownish-yellow wood.

B. Microscopic examination (*2.8.23*). The powder is brownish-yellow. Examine under a microscope using *chloral hydrate solution R*. The powder shows the following diagnostic characters: cork cells, polygonal or rounded in surface view, with brown contents; abundant parenchyma, mostly thin-walled and rounded but some with thicker walls; groups of small, reticulately thickened vessels embedded in small-celled, unlignified parenchyma; fragments of larger vessels with reticulate thickening, up to

Herbal drugs

125 µm in diameter; fragments of secretory canals up to 180 µm wide. Examine under a microscope using a 50 per cent *V/V* solution of *glycerol R*. The powder shows starch granules, simple, rounded or ovoid, up to about 12 µm, and numerous larger, compound granules, many with several components.

C. Examine the chromatograms obtained in the test for species of *Angelica* and *Ligusticum* described in the European Pharmacopoeia.

Results A: see below the sequence of zones present in the chromatograms obtained with the reference solution and the test solution. Furthermore, other weak fluorescent zones may be present in the chromatogram obtained with the test solution.

Top of the plate	
(*Z*)-Ligustilide: a bluish-white fluorescent zone	A bluish-white fluorescent zone
Osthole: a blue fluorescent zone	
Imperatorin: a whitish fluorescent zone	A weak whitish fluorescent zone
	A weak whitish fluorescent zone
Reference solution	**Test solution**

Results B: see below the sequence of zones present in the chromatograms obtained with the reference solution and the test solution. Furthermore, other weak quenching zones may be present in the chromatogram obtained with the test solution.

Top of the plate	
(*Z*)-Ligustilide: a bluish fluorescent zone	A bluish fluorescent zone
Osthole: a quenching zone	A weak quenching zone
Imperatorin: a quenching zone	
Reference solution	**Test solution**

Results C: see below the sequence of zones present in the chromatograms obtained with the reference solution and the test solution. Furthermore, other faint zones may be present in the chromatogram obtained with the test solution.

Top of the plate	
	2 prominent reddish zones
(*Z*)-Ligustilide: a grey zone	A grey zone
Osthole: a violet zone	
Imperatorin: a grey zone	
	2 purple zones
	A distinct brown zone
Reference solution	**Test solution**

TESTS

Species of *Angelica* and *Ligusticum* described in the European Pharmacopoeia. Thin-layer chromatography (*2.2.27*).

Test solution. To 1 g of the freshly powdered herbal drug (355) (*2.9.12*) add 4 mL of *heptane R* and sonicate for 5 min. Centrifuge the mixture and use the supernatant.

Reference solution. Dissolve 1 mg of *imperatorin R*, 1 mg of *(Z)-ligustilide R* and 1 mg of *osthole R* in 10 mL of *methanol R*.

Plate: *TLC silica gel F_{254} plate R* (2-10 µm).

Mobile phase: *glacial acetic acid R*, *ethyl acetate R*, *toluene R* (1:10:90 *V/V/V*).

Application: 4 µL, as bands of 8 mm.

Development: over a path of 6 cm.

Drying: in air.

Detection A: examine in ultraviolet light at 365 nm.

Results A: the chromatogram obtained with the test solution shows no blue fluorescent zone just below or above the zone due to imperatorin in the chromatogram obtained with the reference solution.

Detection B: examine in ultraviolet light at 254 nm.

Results B: the chromatogram obtained with the test solution shows no zone at or just below the zone due to imperatorin in the chromatogram obtained with the reference solution.

Detection C: treat the plate with a solution of 20 mL of *sulfuric acid R* in 180 mL of ice-cooled *methanol R*; heat at 100-105 °C for 5 min and examine in daylight.

Results C: the chromatogram obtained with the test solution shows no purple zone between the 2 reddish zones at the top of the chromatogram and the zone due to (*Z*)-ligustilide in the chromatogram obtained with the reference solution; the chromatogram obtained with the test solution shows no purple zone between the zones due to (*Z*)-ligustilide and osthole in the chromatogram obtained with the reference solution.

Foreign matter (*2.8.2*): maximum 3 per cent, determined on 50 g.

Loss on drying (*2.2.32*): maximum 12.0 per cent, determined on 1.000 g of the powdered herbal drug (355) (*2.9.12*) by drying in an oven at 105 °C for 2 h.

Total ash (*2.4.16*): maximum 8.0 per cent.

Ash insoluble in hydrochloric acid (*2.8.1*): maximum 2.0 per cent.

ASSAY

Essential oil (*2.8.12*). Use a 2 L flask, 10 drops of *liquid paraffin R*, 500 mL of *water R* as the distillation liquid and 0.50 mL of *xylene R* in the graduated tube. Reduce the herbal drug to a powder (500) (*2.9.12*) and immediately use 40.0 g for the determination. Distil at a rate of 2-3 mL/min for 4 h.

01/2013:2567

MAGNOLIA OFFICINALIS BARK

Magnoliae officinalis cortex

DEFINITION

Dried stem and branch bark of *Magnolia officinalis* Rehder et E.H.Wilson.

Content: minimum 2.0 per cent of the sum of magnolol ($C_{18}H_{18}O_2$; M_r 266.3) and honokiol ($C_{18}H_{18}O_2$; M_r 266.3) (dried drug).

IDENTIFICATION

A. Fragments of stem and branch bark, quilled singly or double quilled, about 30 cm long and 2-7 mm thick. The outer surface is brownish-grey, rough, sometimes scaly, easily exfoliated, with distinct lenticels and longitudinal

Herbal drugs

striations. The inner surface is reddish-brown or dark brown, smooth, with numerous fine longitudinal striations. The texture is hard and difficult to break. The fracture is granular, brownish-grey in the outer layers and reddish-brown or dark brown in the inner layers.

B. Microscopic examination (*2.8.23*). The powder is yellowish-brown. Examine under a microscope using *chloral hydrate solution R*. The powder shows the following diagnostic characters: numerous sclereids of varying shape and size, up to 100 µm long, often branched, free or in groups, with conspicuous pit canals; oval or rounded oil cells, about 60 µm in diameter, with orange-yellow contents; narrow fibres with thick walls and often in bundles; brown cork fragments.

C. Thin-layer chromatography (*2.2.27*).

Test solution. Reduce to a powder (355) (*2.9.12*), avoiding heating. To 0.5 g of the powdered herbal drug add 5 mL of *methanol R*, sonicate for 5 min, centrifuge, and use the supernatant. Filter through a membrane filter (nominal pore size 0.45 µm) if necessary.

Reference solution. Dissolve 1 mg of *honokiol R*, 1 mg of *magnolol R* and 2 mg of *eugenol R* in 1 mL of *methanol R*.

Plate: *TLC silica gel F_{254} plate R* (5-40 µm) [or *TLC silica gel F_{254} plate R* (2-10 µm)].

Mobile phase: *methanol R*, *ethyl acetate R*, *toluene R* (4:8:120 *V/V/V*).

Application: 5 µL [or 2 µL] as bands of 15 mm [or 8 mm].

Development: over a path of 15 cm [or 7 cm].

Drying: in air.

Detection A: examine in ultraviolet light at 254 nm.

Results A: see below the sequence of zones present in the chromatograms obtained with the reference solution and the test solution. Furthermore, other faint zones may be present in the chromatogram obtained with the test solution.

Top of the plate	
_____	_____
Eugenol: a faint quenching zone	
Magnolol: a dark blue fluorescent zone	A dark blue fluorescent zone (magnolol)
Honokiol: a quenching zone	A quenching zone (honokiol)
_____	_____
Reference solution	**Test solution**

Detection B: treat with *vanillin reagent R*, heat at 100-105 °C for 5-10 min and examine in daylight.

Results B: see below the sequence of zones present in the chromatograms obtained with the reference solution and the test solution. Furthermore, other faint zones of various colours may be present in the chromatogram obtained with the test solution.

Top of the plate	
	A bluish-violet zone
_____	_____
Eugenol: a brown zone	
Magnolol: a pinkish-violet zone	A pinkish-violet zone (magnolol)
Honokiol: a dark violet zone	A dark violet zone (honokiol)
	A bluish-violet zone
_____	_____
Reference solution	**Test solution**

TESTS

Loss on drying (*2.2.32*): maximum 11.0 per cent, determined on 1.000 g of the powdered herbal drug (355) (*2.9.12*) by drying in an oven at 105 °C for 2 h.

Total ash (*2.4.16*): maximum 5.0 per cent.

Ash insoluble in hydrochloric acid (*2.8.1*): maximum 3.0 per cent.

ASSAY

Liquid chromatography (*2.2.29*).

Test solution. To 0.500 g of the powdered herbal drug (355) (*2.9.12*) add 80 mL of *methanol R* and heat in a water-bath under a reflux condenser for 30 min. Cool, then dilute to 100.0 mL with *methanol R*. Filter through a membrane filter (nominal pore size 0.45 µm).

Reference solution (a). Dissolve 4.0 mg of *honokiol CRS* and 4.0 mg of *magnolol CRS* in *methanol R* and dilute to 20.0 mL with the same solvent.

Reference solution (b). Dissolve 2.0 mg of *honokiol CRS* in 2.0 mL of *acetonitrile R*. To 1.0 mL of the solution add 15 µL of *acetic anhydride R* and mix. Heat at 50 °C for 60 min. Cool. Add successively, mixing after each addition, 16 µL of *concentrated ammonia R*, 1.0 mL of *acetonitrile R* and 2.0 mL of *water R*. Filter through a membrane filter (nominal pore size 0.45 µm).

Column:

- *size*: *l* = 0.25 m, Ø = 4.6 mm;
- *stationary phase*: *end-capped octadecylsilyl silica gel for chromatography R1* (5 µm);
- *temperature*: 30 °C.

Mobile phase: 0.5 per cent *V/V* solution of *acetic acid R*, *acetonitrile for chromatography R* (40:60 *V/V*).

Flow rate: 1.0 mL/min.

Detection: spectrophotometer at 290 nm.

Injection: 10 µL.

Run time: twice the retention time of honokiol for the test solution and reference solution (a); 3 times the retention time of honokiol for reference solution (b).

Relative retention with reference to honokiol (retention time = about 8 min): magnolol = about 1.4; honokiol monoacetate isomer 1 = about 1.5; honokiol monoacetate isomer 2 = about 1.6; honokiol diacetate = about 2.6.

System suitability: reference solution (b):

- *resolution*: minimum 1.8 between the peaks due to honokiol monoacetate isomers 1 and 2.

Calculate the sum of the percentage contents of honokiol and magnolol using the following expression:

$$\frac{A_1 \times m_2 \times p_1 \times 5}{A_2 \times m_1} + \frac{A_3 \times m_3 \times p_2 \times 5}{A_4 \times m_1}$$

A_1 = area of the peak due to honokiol in the chromatogram obtained with the test solution;

A_2 = area of the peak due to honokiol in the chromatogram obtained with reference solution (a);

A_3 = area of the peak due to magnolol in the chromatogram obtained with the test solution;

A_4 = area of the peak due to magnolol in the chromatogram obtained with reference solution (a);

m_1 = mass of the herbal drug to be examined used to prepare the test solution, in grams;

m_2 = mass of *honokiol CRS* used to prepare reference solution (a), in grams;

Herbal drugs

m_3 = mass of *magnolol CRS* used to prepare reference solution (a), in grams;

p_1 = percentage content of honokiol in *honokiol CRS*;

p_2 = percentage content of magnolol in *magnolol CRS*.

04/2013:2568

MAGNOLIA OFFICINALIS FLOWER

Magnoliae officinalis flos

DEFINITION

Steamed and dried, unopened flower of *Magnolia officinalis* Rehder et E.H. Wilson.

Content: minimum 0.20 per cent of the sum of magnolol ($C_{18}H_{18}O_2$; M_r 266.3) and honokiol ($C_{18}H_{18}O_2$; M_r 266.3) (dried drug).

IDENTIFICATION

A. The greyish-yellow pedicel is short (0.5-2 cm) and densely tomentose. The brown or reddish-brown flower bud is elongated, conical, 4-7 cm long and 1.5-2.5 cm in diameter at the base; it usually consists of 12 perianth segments in several whorls. The stamens are numerous with a fine, short filament and a linear, yellowish-brown anther. The carpels are free and numerous, spirally arranged on a conical receptacle.

B. Microscopic examination (*2.8.23*). The powder is reddish-brown. Examine under a microscope using *chloral hydrate solution R*. The powder shows the following diagnostic characters: fragments of the perianth segments with polyhedral or elliptical epidermal cells, with irregularly thickened walls and anomocytic stomata (4-6 subsidiary cells) (*2.8.3*), accompanied by parenchyma that includes oval or rounded oil cells about 50 µm in diameter with orange-yellow contents; certain fragments contain epidermal cells with rounded papillae; numerous, branched sclereids, with channelled walls and a large lumen, about 15 µm in diameter; numerous elliptical pollen grains about 50 µm long and 40 µm wide, with a smooth exine.

C. Examine the chromatograms obtained in the test for other *Magnolia* species.

Detection A: examine in ultraviolet light at 254 nm.

Results A: see below the sequence of zones present in the chromatograms obtained with the reference solution and the test solution. Furthermore, other faint zones may be present in the chromatogram obtained with the test solution.

Top of the plate	
———	———
Eugenol: a faint quenching zone	
Magnolol: a dark blue fluorescent zone	A dark blue fluorescent zone (magnolol)
Honokiol: a quenching zone	A quenching zone (honokiol)
———	———
Reference solution	**Test solution**

Detection B: treat with *vanillin reagent R*, heat at 100-105 °C for 5-10 min and examine in daylight.

Results B: see below the sequence of zones present in the chromatograms obtained with the reference solution and the test solution. Furthermore, other faint zones of various colours may be present in the chromatogram obtained with the test solution.

Top of the plate	
	A bluish-violet zone
———	———
Eugenol: a brown zone	
Magnolol: a pinkish-violet zone	A pinkish-violet zone (magnolol)
Honokiol: a dark violet zone	A dark violet zone (honokiol)
	A bluish-violet zone
———	———
Reference solution	**Test solution**

TESTS

Other *Magnolia* species. Thin-layer chromatography (*2.2.27*).

Test solution. Reduce the herbal drug to a powder (710) (*2.9.12*), avoiding heating. To 0.5 g of the powdered herbal drug add 2.5 mL of *methanol R*. Sonicate for 15 min at a power of 80 W and a frequency of 37 kHz (sonication time may be adapted according to the power and frequency used), then centrifuge at 1500-2000 *g* for 10 min and transfer the supernatant to a 5 mL flask. Add 2 mL of *methanol R* to the residue, sonicate for 15 min and centrifuge. Transfer the supernatant into the same 5 mL flask. Dilute to 5 mL with *methanol R*. Filter through a membrane filter (nominal pore size 0.45 µm) if necessary.

Reference solution. Dissolve 1 mg of *honokiol R*, 1 mg of *magnolol R* and 2 mg of *eugenol R* in 4 mL of *methanol R*.

Plate: *TLC silica gel F_{254} plate R* (2-10 µm).

Mobile phase: *methanol R*, *ethyl acetate R*, *toluene R* (1:5:30 *V/V/V*).

Application: 8 µL as bands of 8 mm.

Development: over a path of 7 cm.

Drying: in air.

Detection: examine in ultraviolet light at 365 nm.

Results: the chromatogram obtained with the test solution shows no blue fluorescent zone in the lower part of the plate and no green fluorescent zone in the upper part, nor any other fluorescent zone.

Loss on drying (*2.2.32*): maximum 11.0 per cent, determined on 1.000 g of the powdered herbal drug (710) (*2.9.12*) by drying in an oven at 105 °C.

Total ash (*2.4.16*): maximum 8.0 per cent.

ASSAY

Liquid chromatography (*2.2.29*).

Test solution. Reduce the herbal drug to a powder (710) (*2.9.12*) using a blade grinder equipped with a double-walled grinding chamber cooled to a temperature of about 10 °C. To 0.500 g of the powdered herbal drug add 10 mL of *methanol R*. Sonicate for 1 h at a power of 80 W and a frequency of 37 kHz (sonication time may be adapted according to the power and frequency used). Change the water of the ultrasonic bath after 30 min of sonication to prevent heating. Centrifuge at 1500-2000 *g* for 15 min. Transfer the supernatant to a 20.0 mL flask. Add 9.5 mL of *methanol R* to the residue. Repeat the sonication for 1 h. Change the water of the ultrasonic bath after 30 min of sonication to prevent heating. Centrifuge. Transfer the supernatant to the same 20.0 mL flask. Cool, then dilute to 20.0 mL with *methanol R*. Filter through a membrane filter (nominal pore size 0.45 µm).

Reference solution (a). Dissolve 5.0 mg of *honokiol CRS* in *methanol R* and dilute to 5.0 mL with the same solvent. Dilute 1.0 mL of the solution to 25.0 mL with *methanol R*.

Reference solution (b). Dissolve 6.0 mg of *magnolol CRS* in *methanol R* and dilute to 20.0 mL with the same solvent.

Herbal drugs

Reference solution (c). Dissolve 2.0 mg of *honokiol R* in 2.0 mL of *acetonitrile R*. Add 30 µL of *acetic anhydride R* and mix. Heat at 50 °C for 60 min. Cool. Add successively, mixing after each addition, 32 µL of *concentrated ammonia R*, 2.0 mL of *acetonitrile R* and 4.0 mL of *water R*. Filter through a membrane filter (nominal pore size 0.45 µm).

Column:

- *size*: *l* = 0.15 m, Ø = 4.6 mm;
- *stationary phase*: *end-capped polar-embedded octadecylsilyl amorphous organosilica polymer R* (3.5 µm);
- *temperature*: 25 ± 2 °C.

Mobile phase:

- *mobile phase A*: *anhydrous formic acid R, water R* (0.1:99.9 *V/V*);
- *mobile phase B*: *acetonitrile for chromatography R*;

Time (min)	Mobile phase A (per cent *V/V*)	Mobile phase B (per cent *V/V*)
0 - 20	47	53
20 - 22	47 → 5	53 → 95
22 - 27	5	95

Flow rate: 1.0 mL/min.

Detection: spectrophotometer at 292 nm.

Injection: 20 µL.

Relative retention with reference to honokiol (retention time = about 10 min): magnolol = about 1.3; honokiol monoacetate isomer 1 = about 1.4; honokiol monoacetate isomer 2 = about 1.5; honokiol diacetate = about 1.9.

System suitability: reference solution (c):

- *resolution*: minimum 2.0 between the peaks due to honokiol monoacetate isomers 1 and 2.

If necessary, dilute the test solution to obtain peaks of honokiol and magnolol that are similar in height to the corresponding peaks in reference solutions (a) and (b).

Calculate the sum of the percentage contents of honokiol and magnolol using the following expression:

$$\frac{A_1 \times m_2 \times 0.16 \times p_1 \times d}{A_2 \times m_1} + \frac{A_3 \times m_3 \times p_2 \times d}{A_4 \times m_1}$$

A_1 = area of the peak due to honokiol in the chromatogram obtained with the test solution;

A_2 = area of the peak due to honokiol in the chromatogram obtained with reference solution (a);

A_3 = area of the peak due to magnolol in the chromatogram obtained with the test solution;

A_4 = area of the peak due to magnolol in the chromatogram obtained with reference solution (b);

m_1 = mass of the herbal drug to be examined used to prepare the test solution, in grams;

m_2 = mass of *honokiol CRS* used to prepare reference solution (a), in grams;

m_3 = mass of *magnolol CRS* used to prepare reference solution (b), in grams;

p_1 = percentage content of honokiol in *honokiol CRS*;

p_2 = percentage content of magnolol in *magnolol CRS*;

d = dilution factor of the test solution.

01/2011:1541

MALLOW FLOWER

Malvae sylvestris flos

DEFINITION

Whole or fragmented dried flower of *Malva sylvestris* L. or its cultivated varieties.

IDENTIFICATION

A. The flower consists of an epicalyx with 3 oblong or elliptical-lanceolate parts that are shorter than those of the calyx and situated immediately below it; a calyx with 5 pubescent triangular lobes, gamosepalous at the base; a corolla 3-4 times longer than the calyx with 5 wedge-shaped, notched petals fused to the staminal tube at their base; numerous stamens, the filaments of which fuse into a staminal tube covered by small star-shaped trichomes and occasional simple trichomes visible using a lens; numerous wrinkled carpels, glabrous or sometimes pubescent, enclosed in the staminal tube and arranged into a circle around a central style ending with numerous filiform stigmas. In cultivated varieties, the epicalyx is 3-7 partite, the calyx 5-8 partite and the corolla 5-10 partite.

B. Reduce to a powder (355) (*2.9.12*). The powder is bluish-grey. Examine under a microscope using *chloral hydrate solution R*. The powder shows the following diagnostic characters (Figure 1541.-1): unicellular, thick-walled, flexuous covering trichomes, from the calyx and the epicalyx, up to 2 mm in length, whole [L] or, most often, fragmented [Q]; fragments of the epidermis of the sepals in surface view [D, J] with anomocytic stomata (*2.8.3*) [Dc]; club-shaped glandular trichomes with multicellular heads [Db] and short unicellular covering trichomes, somewhat curved, either isolated [J] or in star-shaped groups of 2-6 [Da]; fragments of covering trichomes [N]; isolated glandular trichomes in surface view, [F]; or in transverse section [G]; fragments of the mesophyll of the calyx and the epicalyx whose cells contain small cluster crystals of calcium oxalate [K]; veins of the sepals [P] with vessels [Pa] accompanied by cells with cluster crystals of calcium oxalate [Pb]; fragments of petal epidermis, with elongated cells and sinuous margins, narrow in the wild plant [A], shorter and broader in the cultivated varieties [B], bearing sessile glandular trichomes with multicellular club-shaped heads [Ba, C, E]; fragments of petal mesophyll [H] consisting of large mucilage cells [Hc], sometimes cells with small cluster crystals of calcium oxalate [Hb] and spiral vessels [Ha]; spherical pollen grains, about 150 µm in diameter, with a roughly spiny exine [M].

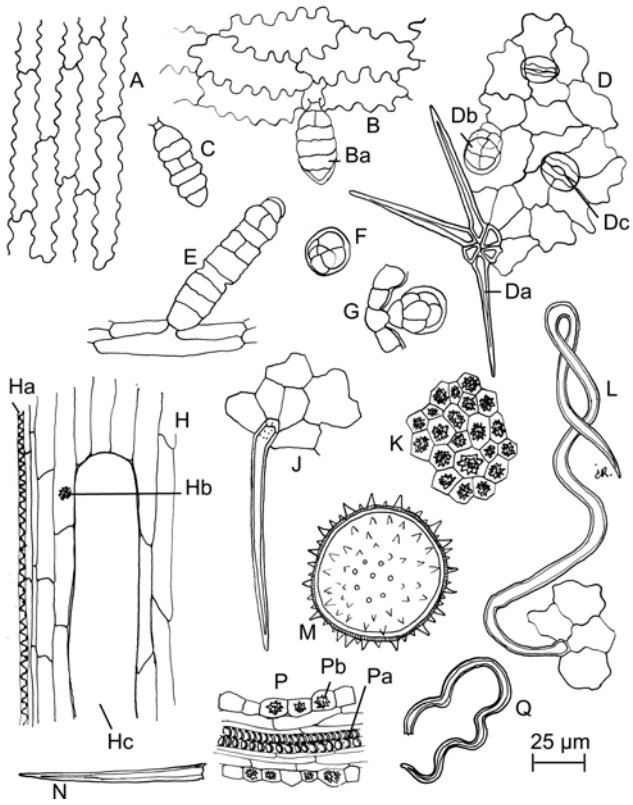

Figure 1541.-1. – *Illustration for identification test B of powdered herbal drug of mallow flower*

C. Thin-layer chromatography (*2.2.27*).

Test solution. To 1 g of the powdered herbal drug (355) (*2.9.12*) add 10 mL of *ethanol (60 per cent V/V) R*. Stir for 15 min and filter.

Reference solution. 0.5 g/L solution of *quinaldine red R* in *ethanol (96 per cent) R*.

Plate: *TLC silica gel plate R*.

Mobile phase: *glacial acetic acid R*, *water R*, *butanol R* (15:30:60 *V/V/V*).

Application: 10 µL of the test solution and 5 µL of the reference solution, as bands.

Development: over a path of 10 cm.

Drying: in air.

Detection: examine in daylight.

Results: the chromatogram obtained with the reference solution shows an orange-red zone in the upper part of the middle third ; the chromatogram obtained with the test solution shows, below the zone in the chromatogram obtained with the reference solution, 2 violet zones in the middle third, with the principal zone (6″-malonyl malvin) situated just below the other violet zone (malvin).

TESTS

Loss on drying (*2.2.32*): maximum 12.0 per cent, determined on 1.000 g of the powdered herbal drug by drying in an oven at 105 °C.

Total ash (*2.4.16*): maximum 14.0 per cent.

Ash insoluble in hydrochloric acid (*2.8.1*): maximum 2.0 per cent.

Swelling index (*2.8.4*): minimum 15, determined on 0.2 g of the powdered herbal drug (710) (*2.9.12*) moistened with 0.5 mL of *anhydrous ethanol R*.

07/2011:2391

MALLOW LEAF

Malvae folium

DEFINITION

Whole or fragmented, dried leaf of *Malva sylvestris* L., *Malva neglecta* Wallr. or a mixture of both species.

IDENTIFICATION

A. The leaves of *M. sylvestris* are up to 12 cm long and up to 15 cm wide with 3, 5 or 7 lobes and sinuate at the base; the leaves of *M. neglecta* are up to 9 cm long and wide, round or kidney-shaped with 5-7 indistinct lobes. The leaves of both species have irregular dentate margins and are green or brownish-green. The abaxial surface of the lamina bears more hairs and shows a more prominent venation than the adaxial surface. The major veins on the upper surface of the leaves and the petioles may be violet. The petioles are as long as the leaves, up to 2 mm wide, rounded and somewhat flattened, longitudinally slightly grooved, green or brownish-green or violet. The fragmented drug consists of occasionally agglomerated, crumpled pieces of leaves showing prominent veins.

B. Microscopic examination (*2.8.23*). The powder is green or yellowish-green. Examine under a microscope using *chloral hydrate solution R*. The powder shows the following diagnostic characters (Figure 2391.-1): fragments of the lamina, in transverse section [F], consisting of the lower epidermis, in surface view [C], and the upper epidermis, in surface view [D] or in transverse section [Fb], with cells that show straight, or more or less sinuous anticlinal walls; stomata mostly anisocytic (*2.8.3*) on both surfaces [Ca, Da]; long covering trichomes with thickened walls and tapering to a point at the apex, usually unicellular, whole [A, Fa] or fragmented [Db], but in *M. Sylvestris* they may be stellate with 2-8 components [H], each strongly pitted at the base; club-shaped glandular trichomes composed of 2-6 cells [E] occur in both species; fragments of the mesophyll consisting of palisade parenchyma, in surface view [Dc] or in transverse section [Fc], and spongy mesophyll cells containing mucilage, cells containing cluster crystals of calcium oxalate, often associated with vessels [B]; occasional spherical pollen grains, 110-170 µm in diameter, with a spiny exine [G].

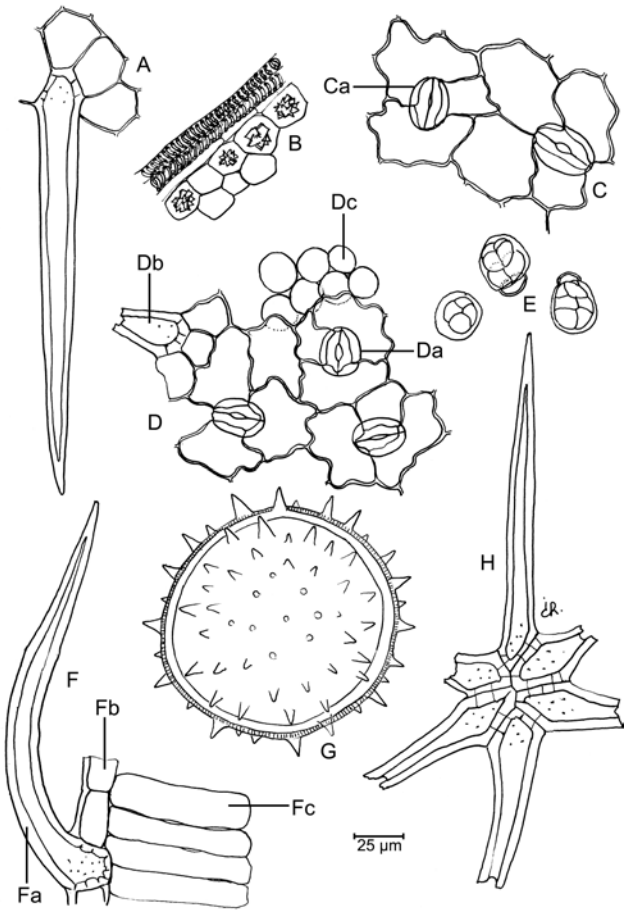

Figure 2391.-1. – *Illustration for identification test B of powdered herbal drug of mallow leaf*

C. Thin-layer chromatography (*2.2.27*).

Test solution. To 2.0 g of the powdered herbal drug (710) (*2.9.12*) add 20 mL of an 80 per cent *V/V* solution of *tetrahydrofuran R*; extract for 10 min using sonication and filter.

Reference solution. Dissolve 3 mg of *hyperoside R* and 3 mg of *rutin R* in 20 mL of *methanol R*.

Plate: *TLC silica gel plate R* (5-40 µm) [or *TLC silica gel plate R* (2-10 µm)].

Mobile phase: *anhydrous formic acid R*, *anhydrous acetic acid R*, *water R*, *ethyl formate R*, *3-pentanone R* (4:11:14:20:50 *V/V/V/V/V*).

Application: 10 µL [or 4 µL] as bands of 10 mm [or 8 mm].

Development: over a path of 10-12 cm [or 6 cm].

Drying: in air.

Detection: heat at 100 °C for 10 min; spray or dip the warm plate in a 10 g/L solution of *diphenylboric acid aminoethyl ester R* in *methanol R*; remove the solvent with cold air; spray or dip the plate in a 50 g/L solution of *macrogol 400 R* in *methanol R*, dry in air and examine after 15 min in ultraviolet light at 365 nm.

Results: see below the sequence of fluorescent zones present in the chromatograms obtained with the reference solution and the test solution. Furthermore, other faint fluorescent zones may be present in the chromatogram obtained with the test solution.

Top of the plate	
———	———
Hyperoside: a yellow fluorescent zone	A yellow fluorescent zone
———	———
Rutin: a yellow fluorescent zone	A yellow fluorescent zone
	A light blue fluorescent zone
	An orange fluorescent zone
	An orange fluorescent zone
Reference solution	**Test solution**

TESTS

Foreign matter (*2.8.2*): maximum 5 per cent of foreign organs, maximum 5 per cent of leaves with blisters of spores of *Puccinia malvacearum* and maximum 2 per cent of foreign elements.

Foreign organs can be flowers, fruits and parts of the stem. The blisters of spores on the leaves are mostly 1 mm wide, and red or brown. Examine under a microscope using *chloral hydrate solution R*. The spores of *Puccinia malvacearum* are oblong or oval with brownish walls and a small appendage.

Loss on drying (*2.2.32*): maximum 12.0 per cent, determined on 1.000 g of the powdered herbal drug (710) (*2.9.12*) by drying in an oven at 105 °C for 2 h.

Total ash (*2.4.16*): maximum 17.0 per cent.

Ash insoluble in hydrochloric acid (*2.8.1*): maximum 3.0 per cent.

Swelling index (*2.8.4*): minimum 7, determined on 1.0 g of the powdered herbal drug (710) (*2.9.12*).

01/2014:2430

MANDARIN EPICARP AND MESOCARP

Citri reticulatae epicarpium et mesocarpium

DEFINITION

Dried epicarp and mesocarp of the ripe fruit of *Citrus reticulata* Blanco or its cultivars, partly freed from the white spongy tissue of the mesocarp.

Content: minimum 3.5 per cent of hesperidin ($C_{28}H_{34}O_{15}$; M_r 611) (dried drug).

IDENTIFICATION

A. The pericarp consists of irregular pieces, usually in strips, up to 4 cm long, up to 2 cm wide and 1-3 mm thick. The outer surface is yellowish or reddish-brown with spots of oil glands; the inner surface appears yellowish-white, rough, bearing yellowish-white or yellowish-brown vascular bundles.

B. Microscopic examination (*2.8.23*). The powder is light orange-brown. Examine under a microscope using *chloral hydrate solution R*. The powder shows the following diagnostic characters: fragments of epicarp, in surface view, consisting of small polygonal cells, subsquare or rectangular, about 18-30 µm long, with slightly thickened anticlinal walls and occasional rounded anomocytic stomata (*2.8.3*) with indistinct subsidiary cells; fragments of pericarp, in transverse section, showing the epicarp covered by a thick cuticle, sub-epicarpal layers with collenchymatous thickenings and cells of the mesocarp, some of which contain one or more prism crystals of

Herbal drugs

calcium oxalate about 30 µm wide and 50 µm long; rare fragments of schizolysigenous oil glands; very numerous groups of cells of various shapes and sizes from the mesocarp, in surface view or side view; free prism crystals of calcium oxalate; small droplets of orange-yellow essential oil. Examine under a microscope using a 20 g/L solution of *potassium hydroxide R*. The mounting medium becomes yellow because of the presence of hesperidin in the drug.

C. Thin-layer chromatography (*2.2.27*).

Test solution. To 1 g of the powdered herbal drug (355) (*2.9.12*) add 10 mL of *methanol R* and heat in a water-bath at 65 °C for 5 min, shaking frequently. Allow to cool and filter.

Reference solution. Dissolve 1 mg of *caffeic acid R* and 2 mg of *hesperidin R* in 5 mL of *methanol R*.

Plate: *TLC silica gel plate R* (2-10 µm).

Mobile phase: *water R*, *anhydrous formic acid R*, *ethyl acetate R* (10:15:75 *V/V/V*).

Application: 5 µL of the test solution and 10 µL of the reference solution as bands of 8 mm.

Development: over a path of 6 cm.

Drying: in air, then heat at 110-120 °C for 5 min.

Detection: treat with a 10 g/L solution of *aluminium chloride R* in *ethanol (96 per cent) R* and heat at 110-120 °C for 5 min; treat the warm plate with a 10 g/L solution of *diphenylboric acid aminoethyl ester R* in *methanol R*, and then with a 50 g/L solution of *macrogol 400 R* in *methanol R*. After 60 min examine the chromatograms in ultraviolet light at 365 nm.

Results: see below the sequence of fluorescent zones present in the chromatograms obtained with the reference solution and the test solution. Furthermore, other faint fluorescent zones may be present in the chromatogram obtained with the test solution.

Top of the plate	
Caffeic acid: a light blue fluorescent zone	A blue fluorescent zone
Hesperidin: a greenish-brown fluorescent zone	A greenish-brown fluorescent zone (hesperidin)
	A yellowish-green fluorescent zone
	A greenish fluorescent zone
Reference solution	**Test solution**

TESTS

Bitter-orange epicarp and mesocarp. Examine the chromatograms obtained in the assay.

Results: the chromatogram obtained with the test solution shows no peak at the retention time of naringin with an area of more than 1 per cent of the area of the peak due to hesperidin.

Loss on drying (*2.2.32*): maximum 12.0 per cent, determined on 1.000 g of the powdered herbal drug (355) (*2.9.12*) by drying in an oven at 105 °C for 2 h.

Total ash (*2.4.16*): maximum 7.0 per cent.

ASSAY

Liquid chromatography (*2.2.29*).

Test solution. Place 0.125 g of the powdered herbal drug (355) (*2.9.12*) in a 100 mL round-bottomed flask. Add 50.0 mL of *methanol R*, stir for 2 h and filter through a membrane filter (nominal pore size 0.45 µm).

Reference solution (a). Dissolve 10.0 mg of *hesperidin CRS* in *methanol R* and dilute to 50.0 mL with the same solvent.

Reference solution (b). Dissolve 5.0 mg of *naringin R* in reference solution (a) and dilute to 25.0 mL with reference solution (a).

Column:
- *size*: *l* = 0.25 m, Ø = 4.6 mm;
- *stationary phase*: *end-capped octadecylsilyl silica gel for chromatography R* (5 µm);
- *temperature*: 40 °C.

Mobile phase: *acetonitrile R*, *glacial acetic acid R*, *methanol R*, *water R* (2.7:3.7:22:71.6 *V/V/V/V*).

Flow rate: 1 mL/min.

Detection: spectrophotometer at 283 nm.

Injection: 10 µL.

Run time: twice the retention time of hesperidin.

Retention time: naringin = about 15 min; hesperidin = about 20 min.

System suitability: reference solution (b):
- *resolution*: minimum 2.0 between the peaks due to naringin and hesperidin.

Calculate the percentage content of hesperidin using the following expression:

$$\frac{A_1 \times m_2 \times p}{A_2 \times m_1}$$

A_1 = area of the peak due to hesperidin in the chromatogram obtained with the test solution;

A_2 = area of the peak due to hesperidin in the chromatogram obtained with reference solution (a);

m_1 = mass of the herbal drug to be examined used to prepare the test solution, in grams;

m_2 = mass of *hesperidin CRS* used to prepare reference solution (a), in grams;

p = percentage content of hesperidin in *hesperidin CRS*.

01/2008:2355
corrected 7.0

MANDARIN OIL

Citri reticulatae aetheroleum

DEFINITION

Essential oil obtained without heating, by suitable mechanical treatment, from the peel of the fresh fruit of *Citrus reticulata* Blanco.

CHARACTERS

Appearance: greenish, yellow or reddish orange liquid showing blue fluorescence.

Characteristic odour.

IDENTIFICATION

First identification: *B*.

Second identification: *A*.

A. Thin-layer chromatography (*2.2.27*).

Test solution. Dilute 0.1 mL of the substance to be examined to 1 mL with *toluene R*.

Herbal drugs

Reference solution. Dissolve 2 µL of *methyl N-methylanthranilate R*, 4 mg of *guaiazulene R* and 10 mg of *α-terpineol R* in 10 mL of *toluene R*.

Plate: *TLC silica gel plate R* (5-40 µm) [or *TLC silica gel plate R* (2-10 µm)].

Mobile phase: *ethyl acetate R*, *toluene R* (15:85 *V/V*).

Application: 10 µL [or 2 µL] as bands.

Development: over a path of 15 cm [or 6 cm].

Drying: in air.

Detection A: examine in ultraviolet light at 365 nm.

Results A: the intense blue fluorescent zone in the chromatogram obtained with the test solution is similar in position and fluorescence to the zone due to methyl *N*-methylanthranilate in the chromatogram obtained with the reference solution. Furthermore, other fluorescent zones may be present in the chromatogram obtained with the test solution.

Detection B: spray with a 200 g/L solution of *phosphomolybdic acid R* in *ethanol (96 per cent) R* and heat at 100 °C for 10 min; examine in daylight.

Results B: see below the sequence of the zones present in the chromatograms obtained with the reference solution and the test solution. Furthermore, other zones may be present in the chromatogram obtained with the test solution.

Top of the plate	
	A blue zone
Guaiazulene: a blue zone	A blue zone
	A blue zone
_____	_____
	A blue zone
_____	_____
α-Terpineol: a blue zone	A blue zone (α-terpineol)
Reference solution	**Test solution**

B. Examine the chromatograms obtained in the test for chromatographic profile.

Results: the characteristic peaks in the chromatogram obtained with the test solution are similar in retention time to those in the chromatogram obtained with the reference solution.

TESTS

Relative density (*2.2.5*): 0.848 to 0.855.

Refractive index (*2.2.6*): 1.474 to 1.478.

Optical rotation (*2.2.7*): + 64° to + 75°.

Fatty oils and resinified essential oils (*2.8.7*). It complies with the test.

Chromatographic profile. Gas chromatography (*2.2.28*): use the normalisation procedure.

Test solution. Dilute 0.20 g of the substance to be examined to 10.0 mL with *heptane R*.

Reference solution (a). Dilute 5 µL of *α-pinene R*, 5 µL of *sabinene R*, 5 µL of *β-pinene R*, 5 µL of *β-myrcene R*, 5 µL of *p-cymene R*, 70 µL of *limonene R*, 20 µL of *γ-terpinene R* and 5 µL of *methyl N-methylanthranilate R* to 5.0 mL with *heptane R*.

Reference solution (b). Dissolve 5 µL of *limonene R* in 50 mL of *heptane R*. Dilute 0.5 mL of this solution to 5.0 mL with *heptane R*.

Column:

- *material*: fused silica;
- *size*: *l* = 60 m, Ø = 0.25 mm;
- *stationary phase*: *poly(dimethyl)(diphenyl)siloxane R* (film thickness 0.25 µm).

Carrier gas: *helium for chromatography R*.

Flow rate: 1.4 mL/min.

Split ratio: 1:70.

Temperature:

	Time (min)	Temperature (°C)
Column	0 - 90	50 → 230
Injection port		250
Detector		250

Detection: flame ionisation.

Injection: 1 µL.

Elution order: order indicated in the composition of reference solution (a); record the retention times of these substances.

System suitability: reference solution (a):

- *resolution*: minimum 1.5 between the peaks due to sabinene and β-pinene and minimum 1.5 between the peaks due to *p*-cymene and limonene.

Identification of components: using the retention times determined from the chromatogram obtained with reference solution (a), locate the components of reference solution (a) in the chromatogram obtained with the test solution. Disregard the peak due to heptane.

Determine the percentage content of each of these components. The limits are within the following ranges:

- *α-pinene*: 1.6 per cent to 3.0 per cent;
- *sabinene*: maximum 0.3 per cent;
- *β-pinene*: 1.2 per cent to 2.0 per cent;
- *β-myrcene*: 1.5 per cent to 2.0 per cent;
- *p-cymene*: maximum 1.0 per cent;
- *limonene*: 65.0 per cent to 75.0 per cent;
- *γ-terpinene*: 16.0 per cent to 22.0 per cent;
- *methyl N-methylanthranilate*: 0.30 per cent to 0.60 per cent;
- *disregard limit*: area of the principal peak in the chromatogram obtained with reference solution (b).

Residue on evaporation (*2.8.9*): 1.6 per cent to 4.0 per cent, determined after heating on a water-bath for 4 h.

STORAGE

At a temperature not exceeding 25 °C.

01/2012:1856

MARSHMALLOW LEAF

Althaeae folium

DEFINITION

Whole or cut, dried leaf of *Althaea officinalis* L.

IDENTIFICATION

A. The leaves have long petioles and are about 7-10 cm long; the lamina is cordate or ovate with 3-5 shallow lobes and crenate or dentate margins; the venation is palmate. The petioles and both surfaces of the lamina are greyish-green and densely pubescent. Rarely, fragments of the inflorescence or immature fruits may be present.

B. Microscopic examination (*2.8.23*). The powder is greyish-green. Examine under a microscope using *chloral hydrate solution R*. The powder shows the following diagnostic characters (Figure 1856.-1): numerous long, rigid, unicellular covering trichomes with thick walls, pointed at the apex, often fragmented [C], angular and pitted at the base where they are sometimes still united to form stellate structures with up to 8 components, in surface view [B] or in transverse section [E]; few secretory trichomes, isolated, with unicellular stalks

Herbal drugs

and globular, multicellular heads [F]; fragments of the lower [A] and upper [D] leaf epidermises in surface view with anomocytic [Aa] or paracytic [Da] stomata (*2.8.3*), glandular trichomes [Ab] and basal cells of covering trichomes [Ac], often accompanied by palisade parenchyma [Db]; cluster crystals of calcium oxalate, isolated [H] or included in the parenchyma of the mesophyll [Gc, Kb]; fragments of veins [G] with small, spiral [Gb] or annular [Ga] vessels, often accompanied by sheaths containing cluster crystals of calcium oxalate [Gc]; fragments of the lamina, in transverse section [K], showing the epidermises bearing broken covering trichomes [Ka], a symmetrical, heterogeneous mesophyll with some cells containing cluster crystals of calcium oxalate [Kb]; occasional pollen grains, spherical, with a roughly spiny exine, about 150 µm in diameter [J]. Examine under a microscope using *ruthenium red solution R*. The powder shows groups of parenchyma containing mucilage, which stains orange-red.

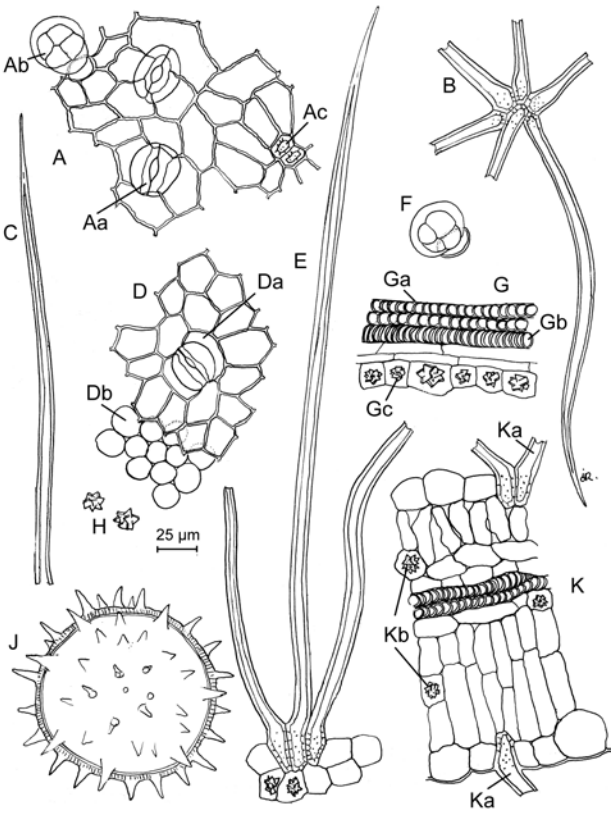

Figure 1856.-1. – *Illustration for identification test B of powdered herbal drug of marshmallow leaf*

C. Thin-layer chromatography (*2.2.27*).

Test solution. To 1 g of the powdered herbal drug (355) (*2.9.12*) add 10 mL of *methanol R*. Heat in a water-bath under a reflux condenser for 5 min. Allow to cool and filter. Distil the filtrate under reduced pressure until the total volume is about 2 mL.

Reference solution. Dissolve 2.5 mg of *chlorogenic acid R* and 2.5 mg of *quercitrin R* in 10 mL of *methanol R*.

Plate: *TLC silica gel plate R*.

Mobile phase: *anhydrous formic acid R*, *glacial acetic acid R*, *water R*, *ethyl acetate R* (11:11:27:100 *V/V/V/V*).

Application: 10 µL as bands.

Development: over a path of 15 cm.

Drying: at 100-105 °C.

Detection: spray with a 10 g/L solution of *diphenylboric acid aminoethyl ester R* in *methanol R*, then with a 50 g/L solution of *macrogol 400 R* in *methanol R*; allow to dry in air for 30 min and examine in ultraviolet light at 365 nm.

Results: see below the sequence of zones present in the chromatograms obtained with the reference solution and the test solution. Furthermore, other fluorescent zones may be present in the chromatogram obtained with the test solution.

Top of the plate	
	A blue fluorescent zone
	A yellow fluorescent zone
Quercitrin: an orange zone	
———	———
	An orange fluorescent zone
	An orange fluorescent zone
———	———
Chlorogenic acid: a blue fluorescent zone	
	A blue fluorescent zone
	An orange fluorescent zone
	An intense yellow fluorescent zone
Reference solution	**Test solution**

TESTS

Foreign matter (*2.8.2*): maximum 4 per cent of leaves infected by *Puccinia malvacearum*, showing red spots, and maximum 2 per cent of other foreign matter.

Loss on drying (*2.2.32*): maximum 10.0 per cent, determined on 1.000 g of the powdered herbal drug (355) (*2.9.12*) by drying in an oven at 105 °C for 2 h.

Total ash (*2.4.16*): maximum 18.0 per cent.

Ash insoluble in hydrochloric acid (*2.8.1*): maximum 2.0 per cent.

Swelling index (*2.8.4*): minimum 12, determined on 0.2 g of the powdered herbal drug (355) (*2.9.12*).

01/2012:1126

MARSHMALLOW ROOT

Althaeae radix

DEFINITION

Peeled or unpeeled, whole or cut, dried root of *Althaea officinalis* L.

IDENTIFICATION

A. The unpeeled, non-fragmented drug consists of cylindrical, slightly twisted roots, up to 2 cm thick, with deep longitudinal furrows. The outer surface is greyish-brown and bears numerous rootlet scars. The fracture is fibrous externally, rugged and granular internally. The section shows a more or less thick, whitish bark with brownish periderm, separated by the well-marked, brownish cambium from a white xylem. The stratified structure of the bark and the radiate structure of xylem become more distinct when moistened.

The peeled drug has a greyish-white, finely fibrous outer surface. Cork and external cortical parenchyma are absent.

B. Microscopic examination (*2.8.23*). The powder is greyish-brown (unpeeled root) or whitish (peeled root). Examine under a microscope using *chloral hydrate solution R*. The powder shows the following diagnostic characters (Figure 1126.-1): fragments of colourless, mainly unlignified, thick-walled fibres [C, D, M] with split or pointed ends [D], sometimes accompanied by parenchymatous cells of the medullary rays [M], or

grouped [C]; fragments of vessels, bordered-pitted or with reticulate or scalariform thickenings [G, H]; cluster crystals of calcium oxalate about 20-35 µm, mostly 25-30 µm in size, isolated [K] or included in parenchymatous cells [B]; fragments of parenchyma [E] with cells containing mucilage [Ea, F]; fragments of cork with thin-walled, tabular cells in surface view [A] and transverse section [L] (unpeeled root). Examine under a microscope using *ruthenium red solution R*. The powder shows groups of parenchyma containing mucilage, which stains orange-red. Examine under a microscope using *water R*. The powder shows numerous starch granules [J], about 3-25 µm in size, occasionally with a longitudinal hilum. The starch granules are mostly simple [Ja], a few being 2-4 compound [Jb].

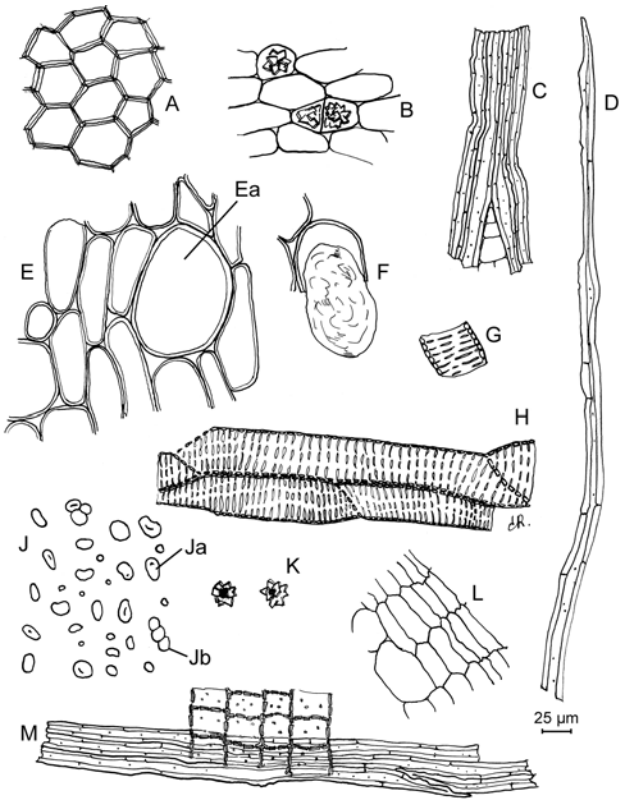

Figure 1126.-1. – *Illustration for identification test B of powdered herbal drug of marshmallow root*

TESTS

Foreign matter (*2.8.2*): maximum 2 per cent of brown deteriorated drug.

Loss on drying (*2.2.32*): maximum 12.0 per cent, determined on 1.000 g of the powdered herbal drug (710) (*2.9.12*) by drying in an oven at 105 °C for 2 h.

Total ash (*2.4.16*): maximum 6.0 per cent for the peeled root and maximum 8.0 per cent for the unpeeled root.

Swelling index (*2.8.4*): minimum 10, determined on the powdered herbal drug (710) (*2.9.12*).

01/2008:1876

MASTIC

Mastix

DEFINITION

Dried resinous exudate obtained from stems and branches of *Pistacia lentiscus* L. var. *latifolius* Coss.

Content: minimum 10 mL/kg of essential oil (anhydrous drug).

IDENTIFICATION

A. Small light yellow to greenish-yellow, non-uniform, spherical or pyriform, clear or opaque, hard glassy fragments.

B. Thin-layer chromatography (*2.2.27*).

Test solution. Dissolve 1 g of the substance to be examined in 10 mL of *methylene chloride R* and filter after 1-2 min.

Reference solution. Dissolve 25 mg of *eugenol R* and 25 mg of *borneol R* in 3 mL of *methylene chloride R*.

Plate: *TLC silica gel plate R*.

Mobile phase: *light petroleum R*, *toluene R* (5:95 *V/V*).

Application: 1 µL, as bands.

Development: over a path of 10 cm.

Drying: in air.

Detection: spray with *vanillin reagent R* and heat at 100-105 °C for 5 min.

Results: see below the sequence of the zones present in the chromatograms obtained with the reference solution and the test solution. Furthermore, other zones of various colours may be present in the chromatogram obtained with the test solution.

Top of the plate	
	A violet zone
	A pale violet zone
	A very pale violet zone
Eugenol: a brown zone	A blue zone
Borneol: a greenish-blue zone	A bluish-violet zone
	A dark violet zone
Reference solution	**Test solution**

TESTS

Acid value (*2.5.1*): 50 to 70, determined on 1.0 g.

Water (*2.2.13*): maximum 10 mL/kg, determined on 25.0 g of the drug reduced to a coarse powder (1400) (*2.9.12*).

Total ash (*2.4.16*): maximum 0.5 per cent.

ASSAY

Essential oil (*2.8.12*). Use a 500 mL round-bottomed flask and 200 mL of *water R* as the distillation liquid. Reduce the drug to a coarse powder (1400) (*2.9.12*) and immediately use 20.0 g for the determination. Introduce 0.50 mL of *xylene R* in the graduated tube. Distil at a rate of 2-3 mL/min for 2 h.

STORAGE

Do not powder.

01/2008:0404

MATRICARIA FLOWER

Matricariae flos

DEFINITION

Dried capitula of *Matricaria recutita* L. (*Chamomilla recutita* (L.) Rauschert).

Content:

- *blue essential oil*: minimum 4 mL/kg (dried drug);
- *total apigenin 7-glucoside* ($C_{21}H_{20}O_{10}$): minimum 0.25 per cent (dried drug).

Herbal drugs

IDENTIFICATION

A. Capitula, when spread out, consisting of an involucre made up of many bracts arranged in 1-3 rows; an elongated-conical receptacle, occasionally hemispherical (young capitula); 12-20 marginal ligulate florets with a white ligule; several dozen yellow central tubular florets. The involucre bracts are ovate or lanceolate, with a brownish-grey scarious margin. The receptacle is hollow, without paleae. The corolla of the ligulate florets has a brownish-yellow tube at the base extending to form a white, elongated-oval ligule. The inferior ovary is dark brown, ovoid or spherical, and has a long style and bifid stigma. The tubular florets are yellow and have a five-toothed corolla tube, 5 syngenesious, epipetalous stamens and a gynoecium similar to that of the ligulate florets.

B. Separate the capitulum into its different parts. Examine under a microscope using *chloral hydrate solution R*. The bracts have a margin composed of thin-walled cells and a central region composed of elongated sclereids with occasional stomata (*2.8.3*). The inner epidermis of the corolla of the ligulate florets, in surface view, consisting of thin-walled, polygonal cells, slightly papillose, those of the outer epidermis markedly sinuous and strongly striated; corolla of the tubular florets with longitudinally elongated epidermal cells, and with small groups of papillae near the apex of the lobes. Glandular trichomes each consisting of a short stalk and a head of 2-3 tiers of 2 cells each occur on the outer surfaces of the bracts and on the corollas of both types of florets. The ovaries have a sclerous ring at the base and the wall is composed of vertical bands of thin-walled, longitudinally elongated cells with numerous glandular trichomes, alternating with fusiform groups of small, radially elongated cells containing mucilage. The cells at the apex of the stigmas are extended to form rounded papillae. Numerous small, cluster crystals of calcium oxalate occur in the inner tissues of the ovaries and the anther lobes. Pollen grains spherical to triangular, about 30 µm in diameter with 3 pores and a spiny exine.

C. Thin-layer chromatography (*2.2.27*).

Test solution. Dilute 50 µL of essential oil obtained in the assay of essential oil in 1 mL of *xylene R*.

Reference solution. Dissolve 2 µL of *chamazulene R*, 5 µL of *(–)-α-bisabolol R* and 10 mg of *bornyl acetate R* in 5 mL of *toluene R*.

Plate: *TLC silica gel plate R*.

Mobile phase: *ethyl acetate R*, *toluene R* (5:95 *V/V*).

Application: 10 µL, as bands.

Development: over a path of 10 cm.

Drying: in air.

Detection: spray with *anisaldehyde solution R* and heat at 100-105 °C for 5-10 min. Examine immediately in daylight.

Results: see below the sequence of zones present in the chromatograms obtained with the reference solution and the test solution. Furthermore, other zones are present in the chromatogram obtained with the test solution.

Top of the plate	
	1 or 2 blue or bluish-violet zones
Chamazulene: a red or reddish-violet zone	A red or reddish-violet zone (chamazulene)
Bornyl acetate: a yellowish-brown zone	A brown zone (en-yne-dicycloether)
(–)-α-Bisabolol: a reddish-violet or bluish-violet zone	A reddish-violet or bluish-violet zone ((–)-α-bisabolol)
Reference solution	**Test solution**

TESTS

Broken drug: maximum 25 per cent, determined on 20.0 g, passes through a sieve (710) (*2.9.12*).

Loss on drying (*2.2.32*): maximum 12.0 per cent, determined on 1.000 g of the powdered herbal drug (355) (*2.9.12*) by drying in an oven at 105 °C for 2 h.

Total ash (*2.4.16*): maximum 13.0 per cent.

ASSAY

Essential oil (*2.8.12*). Use 30 g of whole drug, a 1000 mL flask, 300 mL of *water R* as distillation liquid and 0.50 mL of *xylene R* in the graduated tube. Distil at a rate of 3-4 mL/min for 4 h. Towards the end of this period, stop the flow of water to the condenser assembly but continue distilling until the blue, steam-volatile components have reached the lower end of the condenser. Immediately re-start the flow of water to the condenser assembly to avoid warming the separation space. Stop the distillation after a further 10 min.

Total apigenin 7-glucoside. Liquid chromatography (*2.2.29*).

Test solution. Reduce 40 g of the drug to a powder (500) (*2.9.12*). Place 2.00 g of the powdered herbal drug in a 500 mL round-bottomed flask. Add 200 mL of *ethanol (96 per cent) R*. Heat the mixture under a reflux condenser on a water-bath for 15 min. Cool and filter. Rinse the filter and the residue with a few millilitres of *ethanol (96 per cent) R*. To the filtrate add 10 mL of freshly prepared *dilute sodium hydroxide solution R* and heat the mixture under a reflux condenser on a water-bath for about 1 h. Cool. Dilute to 250.0 mL with *ethanol (96 per cent) R*. To 50.0 mL of the solution add 0.5 g of *citric acid R*. Shake for 5 min and filter. Dilute 5.0 mL of this solution to 10.0 mL with the mobile phase (initial mixture).

Reference solution (a). Dissolve 10.0 mg of *apigenin 7-glucoside R* in 100.0 mL of *methanol R*. Dilute 25.0 mL of this solution to 200.0 mL with the mobile phase (initial mixture).

Reference solution (b). Dissolve 10.0 mg of *5,7-dihydroxy-4-methylcoumarin R* in 100.0 mL of *methanol R*. Dilute 25.0 mL of this solution to 100.0 mL of the mobile phase (initial mixture). To 4.0 mL of this solution add 4.0 mL of reference solution (a) and dilute to 10.0 mL with the mobile phase (initial mixture).

Precolumn:

– *size*: *l* = 8 mm, Ø = 4.6 mm;
– *stationary phase*: *octadecylsilyl silica gel for chromatography R* (5 µm).

Column:

– *size*: *l* = 0.25 m, Ø = 4.6 mm;
– *stationary phase*: *octadecylsilyl silica gel for chromatography R* (5 µm).

Mobile phase:

– *mobile phase A*: *phosphoric acid R*, *water R* (0.5:99.5 *V/V*);
– *mobile phase B*: *phosphoric acid R*, *acetonitrile R* (0.5:99.5 *V/V*);

Time (min)	Mobile phase A (per cent *V/V*)	Mobile phase B (per cent *V/V*)
0 - 9	75	25
9 - 19	75 → 25	25 → 75
19 - 24	25	75

Flow rate: 1 mL/min.

Detection: spectrophotometer at 340 nm.

Injection: 20 µL.

System suitability: reference solution (b):

– *resolution*: minimum 1.8 between the peaks due to apigenin 7-glucoside and 5,7-dihydroxy-4-methylcoumarin.

Herbal drugs

Calculate the percentage content of total apigenin 7-glucoside using the following expression:

$$\frac{A_1 \times m_2}{A_2 \times m_1} \times P \times 0.625$$

A_1 = area of the peak due to apigenin 7-glucoside in the chromatogram obtained with the test solution;

A_2 = area of the peak due to apigenin 7-glucoside in the chromatogram obtained with the reference solution;

m_1 = mass of the herbal drug in the test solution, in grams;

m_2 = mass of *apigenin 7-glucoside R* in reference solution (a), in grams;

P = percentage content of apigenin 7-glucoside in the reagent.

01/2008:1544

MATRICARIA LIQUID EXTRACT

Matricariae extractum fluidum

DEFINITION

Liquid extract produced from *Matricaria flower (0404)*.

Content: minimum 0.30 per cent of blue residual oil.

PRODUCTION

The extract is produced from the herbal drug by a suitable procedure for liquid extracts using a mixture of 2.5 volumes of a 10 per cent *m/m* solution of ammonia (NH_3), 47.5 volumes of water and 50 volumes of ethanol (96 per cent).

CHARACTERS

Appearance: brownish, clear liquid.

Intense characteristic odour and characteristic bitter taste.

Solubility: miscible with water and with ethanol (96 per cent) with development of turbidity, soluble in ethanol (50 per cent *V/V*).

IDENTIFICATION

A. Thin-layer chromatography (*2.2.27*).

Test solution. Place 10 mL of the extract to be examined in a separating funnel and shake with 2 quantities, each of 10 mL, of *pentane R*. Combine the pentane layers, dry over 2 g of *anhydrous sodium sulfate R* and filter. Evaporate the filtrate to dryness on a water-bath and dissolve the residue in 0.5 mL of *toluene R*.

Reference solution. Dissolve 4 mg of *guaiazulene R*, 20 mg of *(–)-α-bisabolol R* and 20 mg of *bornyl acetate R* in 10 mL of *toluene R*.

Plate: *TLC silica gel F_{254} plate R*.

Mobile phase: *ethyl acetate R*, *toluene R* (5:95 *V/V*).

Application: 10 µL as bands.

Development: over a path of 10 cm.

Drying: in air.

Detection A: examine in ultraviolet light at 254 nm.

Results A: the chromatogram obtained with the test solution shows several quenching zones, of which 2 main zones are in the middle third (en-yne-dicycloether).

Detection B: examine in ultraviolet light at 365 nm.

Results B: the chromatogram obtained with the test solution shows in the middle part an intense blue fluorescent zone (herniarin).

Detection C: spray with *anisaldehyde solution R* and examine in daylight while heating at 100-105 °C for 5-10 min.

Results C: the chromatogram obtained with the reference solution shows in the lower third a reddish-violet or bluish-violet zone ((-)-α-bisabolol), in the middle third a yellowish-brown or greyish-green zone (bornyl acetate) and in the upper third a red or reddish-violet zone (guaiazulene). The chromatogram obtained with the test solution shows in the lower third yellowish-brown or greenish-yellow and violet zones and a reddish-violet or bluish-violet zone due to (-)-α-bisabolol in the chromatogram obtained with the reference solution; a brownish zone (en-yne-dicycloether) similar in position to the zone due to bornyl acetate in the chromatogram obtained with the reference solution; a red or reddish-violet zone (chamazulene) corresponding to guaiazulene in the chromatogram obtained with the reference solution and immediately above it 1 or 2 blue or bluish-violet zones; further weak zones may be present in the chromatogram obtained with the test solution.

B. Thin-layer chromatography (*2.2.27*).

Test solution. The extract to be examined.

Reference solution. Dissolve 1.0 mg of *chlorogenic acid R*, 2.5 mg of *hyperoside R* and 2.5 mg of *rutin R* in 10 mL of *methanol R*.

Plate: *TLC silica gel plate R*.

Mobile phase: *anhydrous formic acid R*, *glacial acetic acid R*, *water R*, *ethyl acetate R* (7.5:7.5:18:67 *V/V/V/V*).

Application: 10 µL as bands.

Development: over a path of 15 cm.

Drying: at 100-105 °C.

Detection: spray the warm plate with a 10 g/L solution of *diphenylboric acid aminoethyl ester R* in *methanol R*; subsequently spray with a 50 g/L solution of *macrogol 400 R* in *methanol R*; allow to dry in air for about 30 min and examine in ultraviolet light at 365 nm.

Results: the chromatogram obtained with the reference solution shows in the middle part a light blue fluorescent zone (chlorogenic acid), below it a yellowish-brown fluorescent zone (rutin) and above it a yellowish-brown fluorescent zone (hyperoside). The chromatogram obtained with the test solution shows a yellowish-brown fluorescent zone corresponding to the zone of rutin in the chromatogram obtained with the reference solution, a light blue fluorescent zone corresponding to the zone of chlorogenic acid in the chromatogram obtained with the reference solution, a yellowish-brown fluorescent zone similar in position to the zone of hyperoside in the chromatogram obtained with the reference solution; it also shows above the yellowish-brown fluorescent zone a green fluorescent zone, then several bluish or greenish fluorescent zones and near the solvent front a yellowish fluorescent zone.

TESTS

Ethanol (*2.9.10*): 38 per cent *V/V* to 53 per cent *V/V*.

Dry residue (*2.8.16*): minimum 12.0 per cent.

ASSAY

Place 20.0 g in a 1000 mL round-bottomed flask, add 300 mL of *water R* and distil until 200 mL has been collected in a flask. Transfer the distillate into a separating funnel. Dissolve 65 g of *sodium chloride R* in the distillate and shake with 3 quantities, each of 30 mL, of *pentane R* previously used to rinse the reflux condenser and the flask. Combine the pentane layers, dry over 2 g of *anhydrous sodium sulfate R* and filter into a tared 100 mL round-bottomed flask which has been dried in a desiccator for 3 h. Rinse the anhydrous sodium sulfate and the filter with 2 quantities, each of 20 mL, of *pentane R*. Evaporate the pentane in a water-bath at 45 °C. The residue

of pentane is eliminated in a current of air for 3 min. Dry the flask in a desiccator for 3 h and weigh. The residual oil is blue (chamazulene).

01/2008:1836

MATRICARIA OIL

Matricariae aetheroleum

DEFINITION

Blue essential oil obtained by steam distillation from the fresh or dried flower-heads or flowering tops of *Matricaria recutita* L. (*Chamomilla recutita* L. Rauschert). There are 2 types of matricaria oil which are characterised as rich in bisabolol oxides, or rich in (−)-α-bisabolol.

CHARACTERS

Appearance: clear, intensely blue, viscous liquid.

Intense characteristic odour.

IDENTIFICATION

First identification: B.

Second identification: A.

A. Thin-layer chromatography (*2.2.27*).

Test solution. Dissolve 20 µL of the substance to be examined in 1.0 mL of *toluene R*.

Reference solution. Dissolve 2 mg of *guaiazulene R*, 5 µL of *(−)-α-bisabolol R* and 10 mg of *bornyl acetate R* in 5.0 mL of *toluene R*.

Plate: *TLC silica gel plate R*.

Mobile phase: *ethyl acetate R*, *toluene R* (5:95 *V/V*).

Application: 10 µL, as bands.

Development: over a path of 10 cm.

Drying: in air.

Detection A: examine in daylight.

Results A: see below for the sequence of the zones present in the chromatograms obtained with the reference solution and the test solution.

Top of the plate	
Guaiazulene: a blue zone	A blue zone (chamazulene)
_____	_____
_____	_____
Reference solution	**Test solution**

Detection B: spray with *anisaldehyde solution R* and heat at 100-105 °C for 5-10 min. Examine immediately in daylight.

Results B: see below for the sequence of the zones present in the chromatograms obtained with the reference solution and the test solution. Furthermore, yellowish-brown to greenish-yellow zones (lower third), violet zones (lower third) and further weak zones may be present in the chromatogram obtained with the test solution.

Top of the plate	
	1 or 2 blue to bluish-violet zones
Guaiazulene: a red to reddish-violet zone	A red to reddish-violet zone (chamazulene)
_____	_____
Bornyl acetate: a yellowish-brown to greyish-green zone	A brown zone (en-yne-dicycloether)
_____	_____
(−)-α-Bisabolol: a reddish-violet to bluish-violet zone	A reddish-violet to bluish-violet zone ((−)-α-bisabolol)
	A brownish zone
Reference solution	**Test solution**

B. Examine the chromatograms obtained in the test for chromatographic profile.

Results: the characteristic peaks due to (−)-α-bisabolol and chamazulene in the chromatogram obtained with the test solution are similar in retention time to those in the chromatogram obtained with the reference solution.

TESTS

Chromatographic profile. Gas chromatography (*2.2.28*): use the normalisation procedure.

Test solution. Dissolve 20 µL of the essential oil to be examined in *cyclohexane R* and dilute to 5.0 mL with the same solvent.

Reference solution. Dissolve 20 µL of *(−)-α-bisabolol R*, 5 mg of *chamazulene R* and 6 mg of *guaiazulene R* in *cyclohexane R* and dilute to 5.0 mL with the same solvent.

Column:

- *material*: fused silica,
- *size*: *l* = 30 m (a film thickness of 1 µm may be used) to 60 m (a film thickness of 0.2 µm may be used), Ø = 0.25-0.53 mm, when using a column longer than 30 m, an adjustment of the temperature programme may be necessary,
- *stationary phase*: *macrogol 20 000 R*.

Carrier gas: *helium for chromatography R*.

Flow rate: 1-2 mL/min.

Split ratio: 1:100.

Temperature:

	Time (min)	Temperature (°C)
Column	0 - 40	70 → 230
	40 - 50	230
Injection port		250
Detector		250

Detection: flame ionisation.

Injection: 1.0 µL.

Elution order: order indicated in the composition of the reference solution. Record the retention times of these substances.

Relative retention with reference to chamazulene (retention time = about 34.4 min): β-farnesene = about 0.5; bisabolol oxide B = about 0.8; bisabolone = about 0.87; (−)-α-bisabolol = about 0.9; bisabolol oxide A = about 1.02.

System suitability: reference solution:

- *resolution*: minimum 1.5 between the peaks due to chamazulene and guaiazulene.

Using the retention times determined from the chromatogram obtained with the reference solution, locate (−)-α-bisabolol and chamazulene in the chromatogram obtained with the test solution; locate bisabolol oxides (bisabolol oxide B, bisabolone and bisabolol oxide A) using Figures 1836.-1 and 1836.-2 (disregard the peak due to cyclohexane). The chromatogram obtained with the test solution does not show a peak with the retention time of guaiazulene.

Determine the percentage content of the components. The limits are within the following ranges.

	Matricaria oil rich in bisabolol oxides (per cent)	Matricaria oil rich in (−)-α-bisabolol (per cent)
Bisabolol oxides	29 - 81	
(−)-α-Bisabolol		10 - 65
Chamazulene	≥ 1.0	≥ 1.0
Total of bisabolol oxides and (−)-α-Bisabolol		≥ 20

Herbal drugs

STORAGE

At a temperature not exceeding 25 °C.

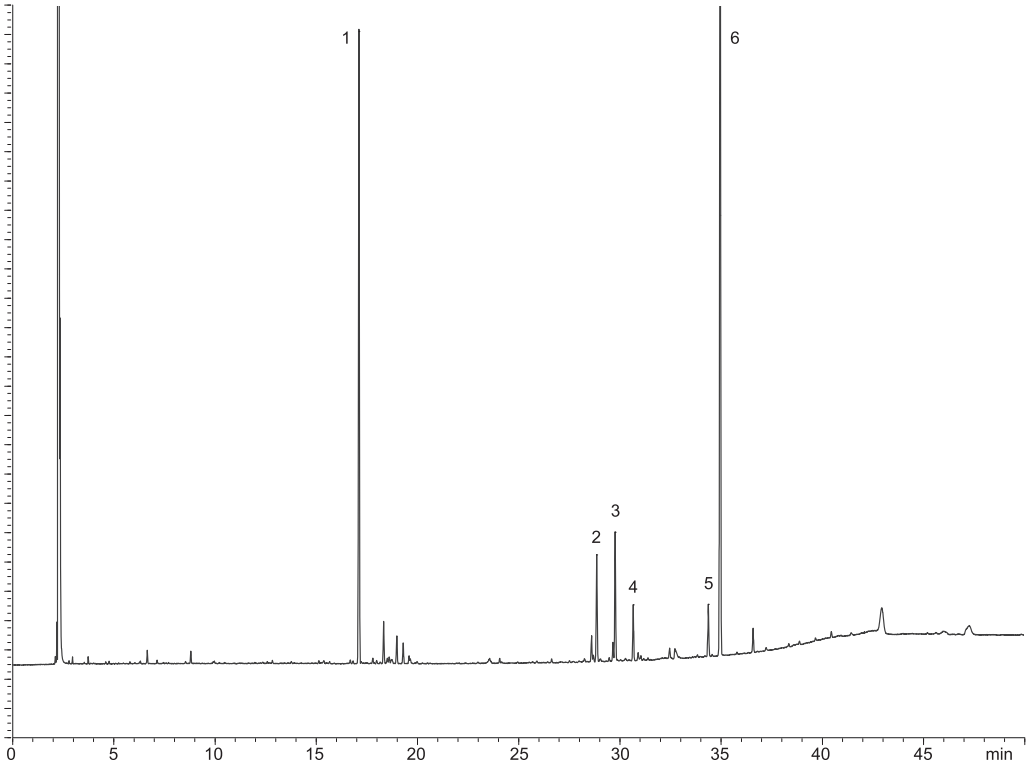

1. β-farnesene
2. bisabolol oxide B
3. bisabolone
4. (−)-α-bisabolol
5. chamazulene
6. bisabolol oxide A

Figure 1836.-1. – *Chromatogram of matricaria oil rich in bisabolol oxides*

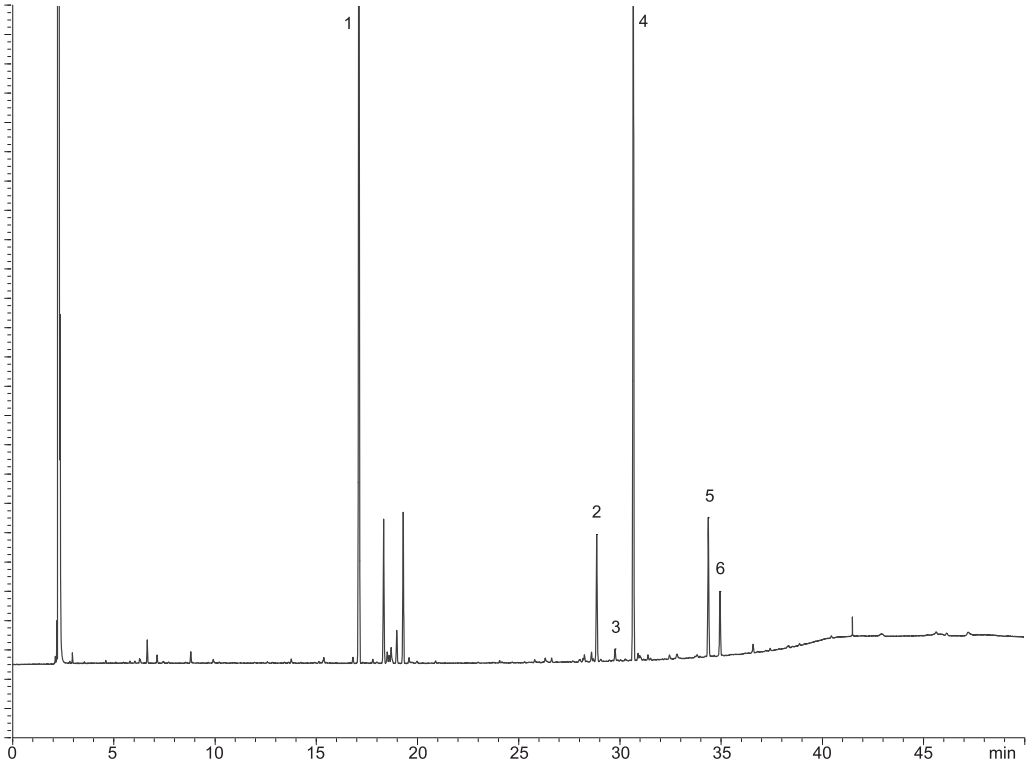

1. β-farnesene
2. bisabolol oxide B
3. bisabolone
4. (−)-α-bisabolol
5. chamazulene
6. bisabolol oxide A

Figure 1836.-2. – *Chromatogram of matricaria oil rich in (−)-α-bisabolol*

04/2013:1868

MEADOWSWEET

Filipendulae ulmariae herba

DEFINITION

Whole or cut, dried flowering tops of *Filipendula ulmaria* (L.) Maxim. (syn. *Spiraea ulmaria* L.).

Content: minimum 1 mL/kg of essential oil (dried drug).

CHARACTERS

Aromatic odour of methyl salicylate, after crushing.

IDENTIFICATION

A. The stem, up to 5 mm in diameter, is greenish-brown, stiff, angular, hollow except at the apex, and has regular, straight, longitudinal furrows. The petiolate leaf, compound imparipinnate, has 2 reddish-brown angular stipules. It consists of 3-9 pairs of leaflets, unevenly dentate, some of which are small and fan-shaped. The leaflets are dark green and glabrous on the upper surface, tomentose and lighter, sometimes silvery on the lower surface. The terminal leaflet, the largest, is divided into 3 segments. The veins are prominent and brown on the lower surface. The inflorescence is complex and composed of very numerous flowers arranged in irregular cymose panicles. The flowers are creamish-white and about 3-6 mm in diameter; the calyx consists of 5 dark green, reflexed and hairy sepals fused at the base to a concave receptacle; the 5 free petals, which are readily detached, are pale yellow, obovate and distinctly narrowed at the base; the stamens are numerous with rounded anthers and they extend beyond the petals; the gynoecium consists of about 4-6 carpels, each with a short style and a globular stigma; the carpels become twisted together spirally to form yellowish-brown fruits with a helicoidal twist. Unopened flower buds are frequently present. If the fruit is present, it has a helicoidal twist and contains brownish seeds.

B. Microscopic examination (*2.8.23*). The powder is green or yellowish-green. Examine under a microscope using *chloral hydrate solution R*. The powder shows the following diagnostic characters (Figure 1868.-1): fragments of the epidermises of the leaves and sepals [C, E, F] with sinuous or wavy cells [Ca, Ea, Fa], short, thick-walled, conical covering trichomes thickened at the base, in surface view [Eb] and in side view [J], unicellular covering trichomes, thin-walled, very long and flexuous, with pointed ends in surface view [Fc] and in side view [A], or their scars (flexuous trichome [Fd], conical trichome [Fe]) and occasional clavate glandular trichomes with a 1- to 3-celled ([Ed] and [G], respectively), uniseriate stalk, a multicellular head and dense brown contents; fragments of the upper epidermis often accompanied by palisade parenchyma [Cb] including some hypertrophied cells containing a cluster crystal of calcium oxalate [Cc]; fragments of the lower epidermis with anomocytic stomata (*2.8.3*) [Ec, Fb], sometimes accompanied by spongy parenchyma [Ff] with some cells containing cluster crystals of calcium oxalate [Fg]; fragments of the petals [H] with thin-walled epidermal cells, some showing rounded papillae [Ha]; numerous spherical pollen grains with 3 pores and a faintly pitted exine [Bb]; fragments of the anther [B, D] whose fibrous layer shows specific thickenings, in surface view [D] and in side view [Ba]; fragments of the ovary [K] with an epidermis bearing stomata [Ka] and with parenchyma containing prism crystals of calcium oxalate [Kb]; fragments of vascular tissue [L] with annular, spiral or pitted vessels from the leaves and stems.

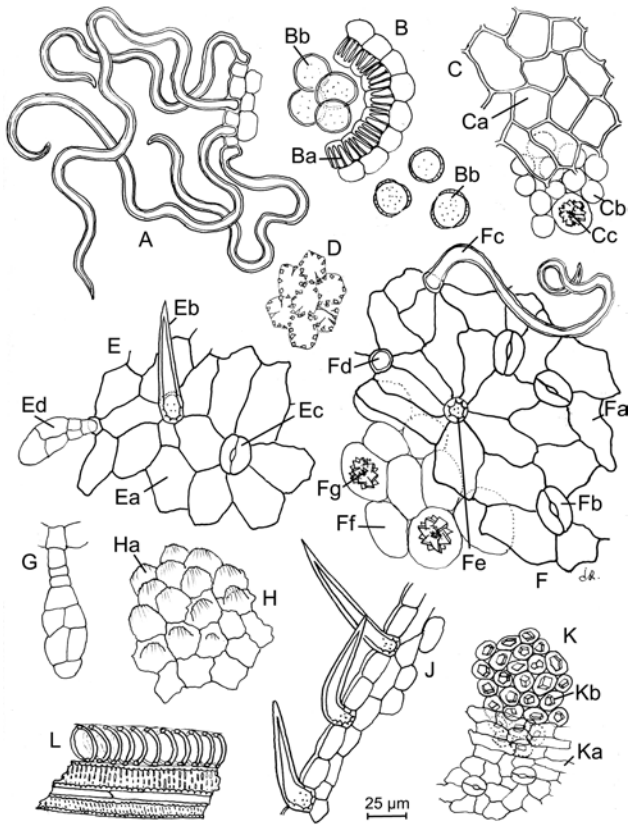

Figure 1868.-1. – *Illustration for identification test B of powdered herbal drug of meadowsweet*

C. Thin-layer chromatography (*2.2.27*).

Test solution. Xylene solution obtained in the assay.

Reference solution. Dissolve 0.1 mL of *methyl salicylate R* and 0.1 mL of *salicylaldehyde R* in *xylene R* and dilute to 5 mL with the same solvent.

Plate: *TLC silica gel plate R*.

Mobile phase: *hexane R*, *toluene R* (50:50 *V/V*).

Application: 10 µL as bands.

Development: over a path of 10 cm.

Drying: in air.

Detection: treat with 3 mL of *ferric chloride solution R3* and examine in daylight.

Results: see below the sequence of zones present in the chromatograms obtained with the reference solution and the test solution. Furthermore, other zones are present in the chromatogram obtained with the test solution.

Top of the plate	
Methyl salicylate: a violet-brown zone	A violet-brown zone (methyl salicylate)
Salicylaldehyde: a violet-brown zone	A violet-brown zone (salicylaldehyde)
Reference solution	**Test solution**

TESTS

Foreign matter (*2.8.2*): maximum 5.0 per cent of stems with a diameter greater than 5 mm and maximum 2.0 per cent of other foreign matter.

Loss on drying (*2.2.32*): maximum 12.0 per cent, determined on 1.000 g of the powdered herbal drug (355) (*2.9.12*) by drying in an oven at 105 °C for 2 h.

Herbal drugs

Total ash (*2.4.16*): maximum 7.0 per cent.

ASSAY

Essential oil (*2.8.12*). Use 50.0 g of the cut herbal drug, a 1000 mL flask, 300 mL of *dilute hydrochloric acid R* as the distillation liquid, and 0.5 mL of *xylene R* in the graduated tube. Distil at a rate of 2-3 mL/min for 2 h.

07/2012:2120

MELILOT

Meliloti herba

DEFINITION

Whole or cut, dried aerial parts of *Melilotus officinalis* (L.) Lam.

Content: minimum 0.3 per cent of coumarin ($C_9H_6O_2$; M_r 146.1) (dried drug).

IDENTIFICATION

A. The stem is green, cylindrical, glabrous and finely ridged. The leaves are alternate, petiolate and trifoliate with 2 lanceolate stipules; the leaflets are up to about 3 cm long and 20 mm wide, elongated or ovate with a finely dentate margin, acute at the apex and base; the upper surface is dark green and glabrous, the lower surface paler green with short, fine hairs, especially at the base. The inflorescence is racemose with numerous pale yellow flowers, about 7 mm long, each having a hairy calyx with 5 deeply-divided, unequal teeth, and a papilionate corolla. The fruit is an indehiscent pod, often persistent within the calyx, yellowish-brown, short and tapering at the apex; the surface is glabrous and transversely wrinkled.

B. Microscopic examination (*2.8.23*). The powder is yellowish-green. Examine under a microscope using *chloral hydrate solution R*. The powder shows the following diagnostic characters (Figure 2120.-1): fragments of the leaf lamina in surface view [D] showing unevenly thickened, slightly sinuous epidermal cells; numerous stomata [Db], mostly anomocytic (*2.8.3*) with 3-6 subsidiary cells [Da] and frequently, underlying palisade parenchyma [Dc]; uniseriate covering trichomes with 2 short, smooth-walled basal cells and a long terminal cell, bent at right angles, with a thick wall and a warty cuticle [A, B]; occasional glandular trichomes with a short, 2- or 3- celled stalk and ovoid, biseriate head with 4 indistinct cells [H]; fragments of the petals composed of cells with wavy walls [M]; fragments of vascular tissue from the stem [F, G], including large vessels [G], sometimes associated with unlignified septate fibres [Fa] and a sheath of parenchymatous cells containing prisms of calcium oxalate [Fb]; fragments of mesophyll [J] including some cells which may occasionally contain cluster crystals of calcium oxalate [Ja]; fragments of the stem epidermis with elongated, straight-walled cells and anomocytic (*2.8.3*) stomata [L]; fragments of the fibrous layer of the anthers in surface view [E] and in transverse section [K]; spherical or ovoid pollen grains about 25 µm long with 3 germinal pores and a smooth exine [C].

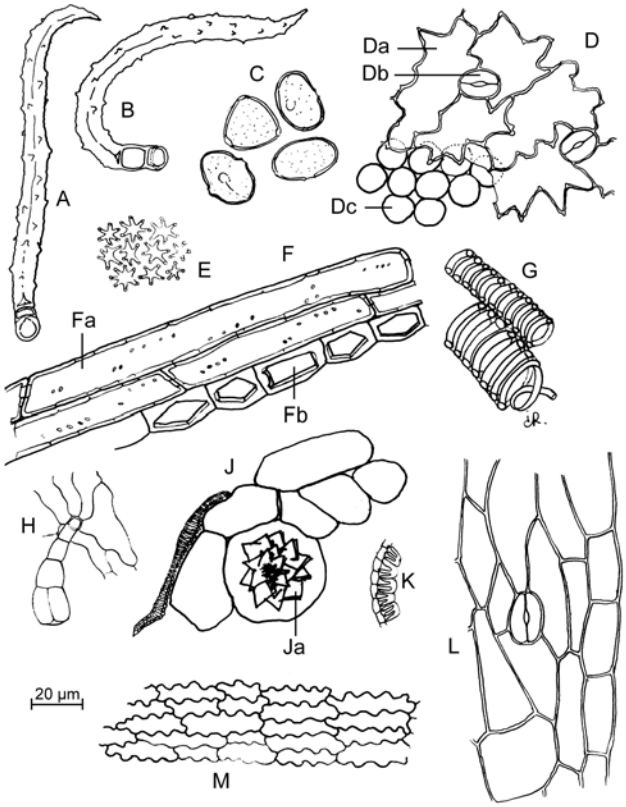

Figure 2120.-1. – *Illustration for identification test B of powdered herbal drug of melilot*

C. Thin-layer chromatography (*2.2.27*).

Test solution. To 0.3 g of the powdered herbal drug (355) (*2.9.12*) add 3 mL of *methanol R*. Heat on a water-bath at 100 °C for 1 min and filter.

Reference solution. Dissolve 50 mg of *coumarin CRS* and 20 mg of *o-coumaric acid R* in 50 mL of *methanol R*.

Plate: *TLC silica gel plate R* (5-40 µm) [or *TLC silica gel plate R* (2-10 µm)].

Mobile phase: *dilute acetic acid R*, *ether R*, *toluene R* (10:50:50 *V/V/V*); use the upper layer.

Application: 25 µL [or 3 µL] as bands of 10 mm [or 8 mm].

Development: over a path of 12 cm [or 6 cm].

Drying: in air.

Detection: spray with *2 M alcoholic potassium hydroxide R* and examine in ultraviolet light at 365 nm.

Results: see below the sequence of zones present in the chromatograms obtained with the reference solution and the test solution. Furthermore, other faint zones of various colours may be present in the chromatogram obtained with the test solution.

Top of the plate	
Coumarin: a greenish-yellow fluorescent zone	A greenish-yellow fluorescent zone (coumarin)
	A blue fluorescent zone
o-Coumaric acid: a greenish-yellow fluorescent zone	A greenish-yellow fluorescent zone (*o*-coumaric acid) may be present
Reference solution	**Test solution**

TESTS

Foreign matter (*2.8.2*): maximum 2 per cent of stems with a diameter greater than 3 mm and maximum 2 per cent of other foreign matter.

Herbal drugs

Loss on drying (*2.2.32*): maximum 12.0 per cent, determined on 1.000 g of the powdered herbal drug (355) (*2.9.12*) by drying in an oven at 105 °C for 2 h.

Total ash (*2.4.16*): maximum 10.0 per cent.

ASSAY

Liquid chromatography (*2.2.29*).

Test solution. Completely reduce about 50 g of the herbal drug to a powder (500) (*2.9.12*). To 5.00 g of the powdered herbal drug add 90 mL of *methanol R* and boil under a reflux condenser for 30 min. Allow to cool. Filter under vacuum through a fibre-glass filter. Take up the residue and the fragmented filter with 90 mL of *methanol R*. Treat in the same manner as before. Combine the filtrates and dilute to 250.0 mL with *methanol R*.

Reference solution. Dissolve 25.0 mg of *coumarin CRS* in *methanol R* and dilute to 250.0 mL with the same solvent.

Column:

- *size*: *l* = 0.25 m, Ø = 4 mm;
- *stationary phase*: *end-capped octadecylsilyl silica gel for chromatography R* (5 µm).

Mobile phase: *acetonitrile R*, 5 g/L solution of *phosphoric acid R* (22:78 *V/V*).

Flow rate: 1.7 mL/min.

Detection: spectrophotometer at 275 nm.

Injection: 20 µL.

System suitability:

- *retention time*: coumarin = about 7.8 min.

Calculate the percentage content of coumarin using the following expression:

$$\frac{A_1 \times m_2 \times p}{A_2 \times m_1}$$

A_1 = area of the peak due to coumarin in the chromatogram obtained with the test solution;

A_2 = area of the peak due to coumarin in the chromatogram obtained with the reference solution;

m_1 = mass of the herbal drug to be examined used to prepare the test solution, in grams;

m_2 = mass of *coumarin CRS* used to prepare the reference solution, in grams;

p = percentage content of coumarin in *coumarin CRS*.

01/2011:1447

MELISSA LEAF

Melissae folium

DEFINITION

Dried leaf of *Melissa officinalis* L.

Content: minimum 1.0 per cent of rosmarinic acid ($C_{18}H_{16}O_8$; M_r 360.3) (dried drug).

CHARACTERS

Odour reminiscent of lemon.

IDENTIFICATION

A. The leaves have a petiole of varying length; the lamina is broadly ovate, up to about 8 cm long and 5 cm wide, acute at the apex and rounded to cordate at the base; the margins are crenate to dentate. The upper surface is intense green, the lower surface is paler green and shows a conspicuous midrib and a raised, reticulate venation; scattered hairs occur on the upper surface and along the veins on the lower surface, which is also finely punctuate.

B. Reduce to a powder (355) (*2.9.12*). The powder is greenish. Examine under a microscope using *chloral hydrate solution R*. The powder shows the following diagnostic characters (Figure 1447.-1): fragments of the upper epidermis, in surface view, with sinuous walls [A, B, G], sometimes accompanied by palisade parenchyma [Aa]; fragments of the lower epidermis [D] with diacytic stomata (*2.8.3*) [Db]; short, straight, unicellular, conical covering trichomes with a finely striated cuticle, free [E] or attached to an epidermis [Da]; multicellular, uniseriate covering trichomes with pointed ends and thick, warty cuticles [C]; eight-celled secretory trichomes of lamiaceous type, in surface view [Ga]; secretory trichomes with unicellular to tricellular stalks and unicellular or, more rarely, bicellular heads, in surface view [Ba] or in transverse section [F].

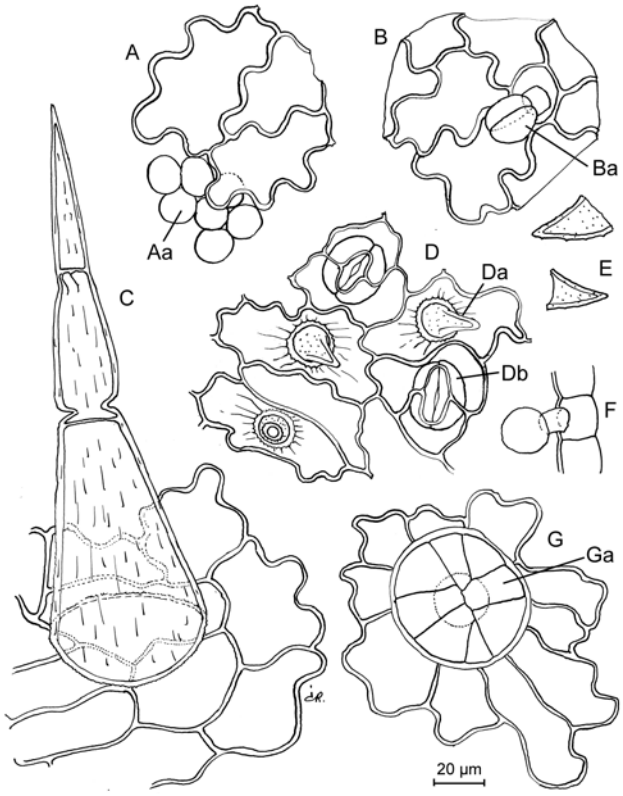

Figure 1447.-1.– *Illustration for identification test B of powdered herbal drug of melissa leaf*

C. Thin-layer chromatography (*2.2.27*).

Test solution. Place 2.0 g of the powdered herbal drug (355) (*2.9.12*) in a 250 mL round-bottomed flask and add 100 mL of *water R*. Distil for 1 h using the apparatus for the determination of essential oils in herbal drugs (*2.8.12*) and 0.5 mL of *xylene R* in the graduated tube. After distillation transfer the organic phase to a 1 mL volumetric flask, rinsing the graduated tube of the apparatus with the aid of a small portion of *xylene R*, and dilute to 1.0 mL with the same solvent.

Reference solution. Dissolve 1.0 µL of *citronellal R* and 10.0 µL of *citral R* (composed of neral and geranial) in 25 mL of *xylene R*.

Plate: *TLC silica gel plate R* (5-40 µm) [or *TLC silica gel plate R* (2-10 µm)].

Mobile phase: *ethyl acetate R*, *hexane R* (10:90 *V/V*).

Application: 20 µL [or 4 µL] as bands.

Development: in an unsaturated tank over a path of 15 cm [or 6 cm].

Drying: in air.

Detection: spray with *anisaldehyde solution R* and heat at 100-105 °C for 10-15 min; examine in daylight.

Results: see below the sequence of zones present in the chromatograms obtained with the reference solution and the test solution. Furthermore, other zones may be present in the chromatogram obtained with the test solution.

Top of the plate	
———	———
Citronellal: a grey or greyish-violet zone at the border between the upper and middle thirds	A grey or greyish-violet zone (citronellal) at the border between the upper and middle thirds A reddish-violet zone
———	———
Citral: 2 greyish-violet or bluish-violet zones at the border between the middle and lower thirds	2 greyish-violet or bluish-violet zones (citral) at the border between the middle and lower thirds
Reference solution	**Test solution**

TESTS

Foreign matter (*2.8.2*): maximum 10 per cent of stems with a diameter greater than 1 mm and maximum 2 per cent of other foreign matter, determined on 20 g.

Loss on drying (*2.2.32*): maximum 10.0 per cent, determined on 1.000 g of the powdered herbal drug (355) (*2.9.12*) by drying in an oven at 105 °C for 2 h.

Total ash (*2.4.16*): maximum 12.0 per cent.

ASSAY

Liquid chromatography (*2.2.29*).

Test solution. Use brown-glass flasks. Disperse 0.100 g of the powdered herbal drug (355) (*2.9.12*) in 90 mL of *ethanol (50 per cent V/V) R*. Boil in a water-bath under a reflux condenser for 30 min, cool, and filter into a 100 mL volumetric flask. Rinse the flask and the filter with 10 mL of *ethanol (50 per cent V/V) R* and dilute to 100.0 mL with the same solvent. Filter through a 0.45 µm filter.

Reference solution (a). Dissolve 20.0 mg of *rosmarinic acid CRS* in *ethanol (50 per cent V/V) R* and dilute to 100.0 mL with the same solvent. Dilute 20.0 mL of this solution to 100.0 mL with *ethanol (50 per cent V/V) R*.

Reference solution (b). Dissolve 5.0 mg of *ferulic acid R* in reference solution (a) and dilute to 50.0 mL with the same solution.

Column:

- *size*: *l* = 0.25 m, Ø = 4.6 mm;
- *stationary phase*: *octadecylsilyl silica gel for chromatography R* (5 µm).

Mobile phase:

- *mobile phase A*: *phosphoric acid R*, *acetonitrile R*, *water R* (1:19:80 *V/V/V*);
- *mobile phase B*: *phosphoric acid R*, *methanol R*, *acetonitrile R* (1:40:59 *V/V/V*);

Time (min)	Mobile phase A (per cent *V/V*)	Mobile phase B (per cent *V/V*)
0 - 20	100 → 55	0 → 45
20 - 25	55 → 0	45 → 100
25 - 30	0 → 100	100 → 0

Flow rate: 1.2 mL/min.

Detection: spectrophotometer at 330 nm.

Injection: 20 µL.

Relative retention with reference to rosmarinic acid (retention time = about 11 min): ferulic acid = about 0.8.

System suitability: reference solution (b):

- *resolution*: minimum 4.0 between the peaks due to ferulic acid and rosmarinic acid.

Calculate the percentage content of rosmarinic acid using the following expression:

$$\frac{A_1 \times m_2 \times p \times 0.2}{A_2 \times m_1}$$

A_1 = area of the peak due to rosmarinic acid in the chromatogram obtained with the test solution;

A_2 = area of the peak due to rosmarinic acid in the chromatogram obtained with reference solution (a);

m_1 = mass of the herbal drug to be examined used to prepare the test solution, in grams;

m_2 = mass of *rosmarinic acid CRS* used to prepare reference solution (a), in grams;

p = percentage content of rosmarinic acid in *rosmarinic acid CRS*.

01/2010:2524

MELISSA LEAF DRY EXTRACT

Melissae folii extractum siccum

DEFINITION

Dry extract produced from *Melissa leaf (1447)*.

Content: minimum 2.0 per cent of rosmarinic acid ($C_{18}H_{16}O_8$; M_r 360.3) (dried extract).

PRODUCTION

The extract is produced from the herbal drug by a suitable procedure using either hot water (not less than 70 °C) or a hydroalcoholic solvent that is at most equivalent in strength to ethanol (70 per cent *V/V*).

CHARACTERS

Appearance: brown or greenish-brown, amorphous powder.

IDENTIFICATION

Thin-layer chromatography (*2.2.27*).

Test solution. To 0.2 g of the extract to be examined add 5 mL of *methanol R*. Sonicate for 5 min and filter.

Reference solution. Dissolve 1.0 mg of *hyperoside R*, 1.0 mg of *rutin R* and 5.0 mg of *rosmarinic acid R* in 10 mL of *methanol R*.

Plate: *TLC silica gel plate R* (5-40 µm) [or *TLC silica gel plate R* (2-10 µm)].

Mobile phase: *anhydrous formic acid R*, *water R*, *ethyl acetate R* (6:6:90 *V/V/V*).

Application: 10 µL [or 2 µL] as bands of 15 mm [or 8 mm].

Development: over a path of 8 cm [or 6 cm].

Drying: in air.

Detection: heat at 100 °C for 5 min, spray the plate whilst still hot with a 5 g/L solution of *diphenylboric acid aminoethyl ester R* in *ethyl acetate R*, and examine in ultraviolet light at 365 nm.

Results: see below the sequence of fluorescent zones present in the chromatograms obtained with the reference solution and the test solution. Furthermore, other weaker fluorescent zones may be present in the chromatogram obtained with the test solution.

Top of the plate	
Rosmarinic acid: a light blue fluorescent zone	An intense light blue fluorescent zone (rosmarinic acid)
	A blue fluorescent zone
———	———
	A blue fluorescent zone
———	———
Hyperoside: an orange or greenish-yellow fluorescent zone	
	A light blue fluorescent zone
Rutin: an orange or greenish-yellow fluorescent zone	
Reference solution	**Test solution**

TESTS

Loss on drying (*2.8.17*): maximum 6.0 per cent.

ASSAY

Liquid chromatography (*2.2.29*).

Test solution. Use brown glass flasks. To 0.200 g of the extract to be examined add 50 mL of *ethanol (50 per cent V/V) R*. Sonicate for 10 min and dilute to 100.0 mL with *ethanol (50 per cent V/V) R*. Filter through a membrane filter (nominal pore size 0.45 µm).

Reference solution (a). Dissolve 20.0 mg of *rosmarinic acid CRS* in *ethanol (50 per cent V/V) R* and dilute to 100.0 mL with the same solvent. Dilute 20.0 mL of this solution to 100.0 mL with *ethanol (50 per cent V/V) R*.

Reference solution (b). Dissolve 5 mg of *ferulic acid R* in reference solution (a) and dilute to 50 mL with reference solution (a).

Column:

- *size*: *l* = 0.25 m, Ø = 4.6 mm;
- *stationary phase*: *octadecylsilyl silica gel for chromatography R* (5 µm).

Mobile phase:

- *mobile phase A*: *phosphoric acid R*, *acetonitrile R*, *water R* (1:19:80 *V/V/V*);
- *mobile phase B*: *phosphoric acid R*, *methanol R*, *acetonitrile R* (1:40:59 *V/V/V*);

Time (min)	Mobile phase A (per cent *V/V*)	Mobile phase B (per cent *V/V*)
0 - 20	100 → 55	0 → 45
20 - 25	55 → 0	45 → 100

Flow rate: 1.2 mL/min.

Detection: spectrophotometer at 330 nm.

Injection: 20 µL.

Relative retention with reference to rosmarinic acid (retention time = about 11 min): ferulic acid = about 0.8.

System suitability: reference solution (b):

- *resolution*: minimum 4.0 between the peaks due to ferulic acid and rosmarinic acid.

Calculate the percentage content of rosmarinic acid using the following expression:

$$\frac{A_1 \times m_2 \times p \times 0.2}{A_2 \times m_1}$$

A_1 = area of the peak due to rosmarinic acid in the chromatogram obtained with the test solution;

A_2 = area of the peak due to rosmarinic acid in the chromatogram obtained with reference solution (a);

m_1 = mass of the extract to be examined used to prepare the test solution, in grams;

m_2 = mass of *rosmarinic acid CRS* used to prepare reference solution (a), in grams;

p = percentage content of rosmarinic acid in *rosmarinic acid CRS*.

01/2014:2071

MILK THISTLE DRY EXTRACT, REFINED AND STANDARDISED

Silybi mariani extractum siccum raffinatum et normatum

DEFINITION

Dry extract, refined and standardised, produced from *Milk thistle fruit (1860)*.

Content: 90 per cent to 110 per cent of the nominal content of silymarin, expressed as silibinin ($C_{25}H_{22}O_{10}$; M_r 482.4), stated on the label. The nominal content of silymarin is within the range 30 per cent *m/m* to 65 per cent *m/m* (dried extract).

The content of silymarin corresponds to:

- *sum of the contents of silicristin and silidianin* (both $C_{25}H_{22}O_{10}$; M_r 482.4): 20 per cent to 45 per cent, calculated with reference to total silymarin;
- *sum of the contents of silibinin A and silibinin B* (both $C_{25}H_{22}O_{10}$; M_r 482.4): 40 per cent to 65 per cent, calculated with reference to total silymarin;
- *sum of the contents of isosilibinin A and isosilibinin B* (both $C_{25}H_{22}O_{10}$; M_r 482.4): 10 per cent to 20 per cent, calculated with reference to total silymarin.

PRODUCTION

The extract is produced from the herbal drug by an appropriate procedure, using one or more of the following solvents:

- ethyl acetate;
- acetone or mixture of acetone and water;
- ethanol or mixture of ethanol and water;
- methanol or mixture of methanol and water.

CHARACTERS

Appearance: yellowish-brown, amorphous powder.

IDENTIFICATION

Thin-layer chromatography (*2.2.27*).

Test solution. Dissolve 0.250 g of the extract to be examined in 5 mL of *methanol R*.

Reference solution. Dissolve 2 mg of *silibinin R* and 5 mg of *taxifolin R* in 10 mL of *methanol R*.

Plate: *TLC silica gel plate R* (5-40 µm) [or *TLC silica gel plate R* (2-10 µm)].

Mobile phase: *anhydrous formic acid R*, *acetone R*, *methylene chloride R* (8.5:16.5:75 *V/V/V*).

Application: 10 µL [or 8 µL] of the test solution and 10 µL [or 2 µL] of the reference solution, as bands.

Development: over a path of 10 cm [or 6 cm].

Herbal drugs

Drying: at 100-105 °C.

Detection: treat the still-warm plate with a 10 g/L solution of *diphenylboric acid aminoethyl ester R* in *methanol R* and subsequently treat with a 50 g/L solution of *macrogol 400 R* in *methanol R*. Allow to dry for 30 min and examine in ultraviolet light at 365 nm.

Results: see below the sequence of zones present in the chromatograms obtained with the reference solution and the test solution. Furthermore, other yellowish-green fluorescent zones may be present between the zones due to silibinin and taxifolin in the chromatogram obtained with the test solution.

Top of the plate	
Silibinin: a yellowish-green fluorescent zone	A yellowish-green fluorescent zone (silibinin)
Taxifolin: an orange fluorescent zone	An orange fluorescent zone (taxifolin)
	A yellowish-green fluorescent zone (silicristin)
	A fluorescent zone (line of application)
Reference solution	**Test solution**

TESTS

Loss on drying (*2.8.17*): maximum 5.0 per cent.

ASSAY

Liquid chromatography (*2.2.29*).

Test solution. Dissolve 60.0 mg of the extract to be examined in *methanol R* and dilute to 100.0 mL with the same solvent.

Reference solution. Dissolve a quantity of *milk thistle dry extract HRS* corresponding to 10.0 mg of silibinin in *methanol R* and dilute to 100.0 mL with the same solvent.

Column:

- *size*: *l* = 0.125 m, Ø = 4 mm;
- *stationary phase*: *end-capped octadecylsilyl silica gel for chromatography R* (5 µm).

Mobile phase:

- *mobile phase A*: *phosphoric acid R*, *methanol R*, *water R* (0.5:35:65 *V/V/V*);
- *mobile phase B*: *phosphoric acid R*, *methanol R*, *water R* (0.5:50:50 *V/V/V*);

Time (min)	Mobile phase A (per cent *V/V*)	Mobile phase B (per cent *V/V*)
0 - 28	100 → 0	0 → 100
28 - 35	0	100
35 - 36	0 → 100	100 → 0
36 - 51	100	0

Flow rate: 0.8 mL/min.

Detection: spectrophotometer at 288 nm.

Injection: 10 µL.

Identification of peaks: use the chromatogram supplied with *milk thistle dry extract HRS* and the chromatogram obtained with the reference solution to identify the peaks due to silicristin, silidianin, silibinin A, silibinin B, isosilibinin A and isosilibinin B. In the chromatogram obtained with the test solution the peak due to silidianin may vary in size or be absent.

Retention time: silibinin B = about 30 min; if necessary, adjust the time periods of the gradient.

System suitability: reference solution:

- *resolution*: minimum 1.8 between the peaks due to silibinin A and silibinin B;
- the chromatogram is similar to the chromatogram supplied with *milk thistle dry extract HRS*.

Calculate the percentage content of total silymarin, expressed as silibinin, using the following expression:

$$\frac{(A_1 + A_2 + A_3 + A_4 + A_5 + A_6) \times m_1 \times p}{(A_7 + A_8) \times m_2}$$

Calculate the percentage content of the sum of silicristin and silidianin, with reference to total silymarin, using the following expression:

$$\frac{(A_1 + A_2) \times 100}{A_1 + A_2 + A_3 + A_4 + A_5 + A_6}$$

Calculate the percentage content of the sum of silibinin A and silibinin B, with reference to total silymarin, using the following expression:

$$\frac{(A_3 + A_4) \times 100}{A_1 + A_2 + A_3 + A_4 + A_5 + A_6}$$

Calculate the percentage content of the sum of isosilibinin A and isosilibinin B, with reference to total silymarin, using the following expression:

$$\frac{(A_5 + A_6) \times 100}{A_1 + A_2 + A_3 + A_4 + A_5 + A_6}$$

A_1 = area of the peak due to silicristin in the chromatogram obtained with the test solution;

A_2 = area of the peak due to silidianin in the chromatogram obtained with the test solution;

A_3 = area of the peak due to silibinin A in the chromatogram obtained with the test solution;

A_4 = area of the peak due to silibinin B in the chromatogram obtained with the test solution;

A_5 = area of the peak due to isosilibinin A in the chromatogram obtained with the test solution;

A_6 = area of the peak due to isosilibinin B in the chromatogram obtained with the test solution;

A_7 = area of the peak due to silibinin A in the chromatogram obtained with the reference solution;

A_8 = area of the peak due to silibinin B in the chromatogram obtained with the reference solution;

m_1 = mass of *milk thistle dry extract HRS* used to prepare the reference solution, in grams;

m_2 = mass of the extract to be examined used to prepare the test solution, in grams;

p = combined percentage content of silibinin A and silibinin B in *milk thistle dry extract HRS*.

01/2014:1860

MILK THISTLE FRUIT

Silybi mariani fructus

DEFINITION

Mature fruit, devoid of the pappus, of *Silybum marianum* L. Gaertner.

Content: minimum 1.5 per cent of silymarin, expressed as silibinin ($C_{25}H_{22}O_{10}$; M_r 482.4) (dried drug).

CHARACTERS

No rancid odour.

Herbal drugs

IDENTIFICATION

A. The achene is strongly compressed, elongate-obovate, about 6-8 mm long, 3 mm broad and 1.5 mm thick; the outer surface is smooth and shiny with a grey or pale brown ground colour variably streaked dark brown longitudinally to give an overall pale greyish or brown colour; the fruit is tapering at the base and crowned at the apex with a glistening, pale yellow extension forming a collar about 1 mm high surrounding the remains of the style. Cut transversely, the fruit shows a narrow, brown outer area and 2 large, dense, white oily cotyledons.

B. Microscopic examination (*2.8.23*). The powder is brownish-yellow with darker specks. Examine under a microscope using *chloral hydrate solution R*. The powder shows the following diagnostic characters: fragments of the epicarp composed of colourless cells, polygonal in surface view, the lumen appearing fairly large or as a small slit, depending on the orientation; groups of parenchymatous cells from the pigment layer, some of them containing colouring matter which appears bright red; very abundant groups of large sclereids from the testa with bright yellow pitted walls and a narrow lumen; occasionally fragments of small-celled parenchyma with pitted and beaded walls; abundant thin-walled parenchymatous cells from the cotyledons containing oil globules and scattered cluster crystals of calcium oxalate; a few larger, prismatic crystals of calcium oxalate.

C. Thin-layer chromatography (*2.2.27*).

Test solution. To 1.0 g of the powdered herbal drug (500) (*2.9.12*) add 10 mL of *methanol R*. Heat under reflux in a water-bath at 70 °C for 5 min. Cool and filter. Evaporate the filtrate to dryness and dissolve the residue in 1.0 mL of *methanol R*.

Reference solution. Dissolve 2 mg of *silibinin R* and 5 mg of *taxifolin R* in 10 mL of *methanol R*.

Plate: *TLC silica gel plate R*.

Mobile phase: *anhydrous formic acid R*, *acetone R*, *methylene chloride R* (8.5:16.5:75 *V/V/V*).

Application: 30 µL of the test solution and 10 µL of the reference solution, as bands.

Development: over a path of 10 cm.

Drying: at 100-105 °C.

Detection: treat the still-warm plate with a 10 g/L solution of *diphenylboric acid aminoethyl ester R* in *methanol R* and subsequently treat with a 50 g/L solution of *macrogol 400 R* in *methanol R*. Allow to dry for 30 min and examine in ultraviolet light at 365 nm.

Results: see below the sequence of zones present in the chromatograms obtained with the reference solution and the test solution. Furthermore, other orange and yellowish-green fluorescent zones are present between the zones due to silibinin and taxifolin in the chromatogram obtained with the test solution.

Top of the plate	
Silibinin: a yellowish-green fluorescent zone	A yellowish-green fluorescent zone (silibinin)
Taxifolin: an orange fluorescent zone	An orange fluorescent zone (taxifolin)
	A yellowish-green fluorescent zone (silicristin)
	A light blue fluorescent zone (line of application)
Reference solution	**Test solution**

TESTS

Loss on drying (*2.2.32*): maximum 8.0 per cent, determined on 1.000 g of the powdered herbal drug (500) (*2.9.12*) by drying in an oven at 105 °C for 2 h.

Total ash (*2.4.16*): maximum 8.0 per cent.

ASSAY

Liquid chromatography (*2.2.29*).

Test solution. Place 5.00 g of the powdered herbal drug (500) (*2.9.12*) in a continuous-extraction apparatus. Add 100 mL of *light petroleum R* and heat in a water-bath for 8 h. Allow the defatted drug to dry at room temperature. In a continuous-extraction apparatus, extract the latter with 100 mL of *methanol R* in a water-bath for 5 h. Evaporate the methanolic extract *in vacuo* to a volume of about 30 mL. Filter into a 50 mL volumetric flask, rinsing the extraction flask and the filter, and diluting to 50.0 mL with *methanol R*. Dilute 5.0 mL of this solution to 50.0 mL with *methanol R*.

Reference solution. Dissolve a quantity of *milk thistle dry extract HRS* corresponding to 10.0 mg of silibinin in *methanol R* and dilute to 100.0 mL with the same solvent.

Column:

- *size*: *l* = 0.125 m, Ø = 4 mm;
- *stationary phase*: *end-capped octadecylsilyl silica gel for chromatography R* (5 µm).

Mobile phase:

- *mobile phase A*: *phosphoric acid R*; *methanol R*, *water R* (0.5:35:65 *V/V/V*);
- *mobile phase B*: *phosphoric acid R*; *methanol R*, *water R* (0.5:50:50 *V/V/V*);

Time (min)	Mobile phase A (per cent *V/V*)	Mobile phase B (per cent *V/V*)
0 - 28	100 → 0	0 → 100
28 - 35	0	100
35 - 36	0 → 100	100 → 0
36 - 51	100	0

Flow rate: 0.8 mL/min.

Detection: spectrophotometer at 288 nm.

Injection: 10 µL.

Identification of peaks: use the chromatogram supplied with *milk thistle dry extract HRS* and the chromatogram obtained with the reference solution to identify the peaks due to silicristin, silidianin, silibinin A, silibinin B, isosilibinin A and isosilibinin B. In the chromatogram obtained with the test solution the peak due to silidianin may vary in size, be absent or be present as the principal peak.

Retention time: silibinin B = about 30 min; if necessary, adjust the time periods of the gradient.

System suitability: reference solution:

- *resolution*: minimum 1.8 between the peaks due to silibinin A and silibinin B;
- the chromatogram obtained is similar to the chromatogram supplied with *milk thistle dry extract HRS*.

Herbal drugs

Calculate the percentage content of total silymarin, expressed as silibinin, using the following expression:

$$\frac{(A_1 + A_2 + A_3 + A_4 + A_5 + A_6) \times m_1 \times p \times 5}{(A_7 + A_8) \times m_2}$$

A_1 = area of the peak due to silicristin in the chromatogram obtained with the test solution;

A_2 = area of the peak due to silidianin in the chromatogram obtained with the test solution;

A_3 = area of the peak due to silibinin A in the chromatogram obtained with the test solution;

A_4 = area of the peak due to silibinin B in the chromatogram obtained with the test solution;

A_5 = area of the peak due to isosilibinin A in the chromatogram obtained with the test solution;

A_6 = area of the peak due to isosilibinin B in the chromatogram obtained with the test solution;

A_7 = area of the peak due to silibinin A in the chromatogram obtained with the reference solution;

A_8 = area of the peak due to silibinin B in the chromatogram obtained with the reference solution;

m_1 = mass of *milk thistle dry extract HRS* used to prepare the reference solution, in grams;

m_2 = mass of the herbal drug to be examined used to prepare the test solution, in grams;

p = combined percentage content of silibinin A and silibinin B in *milk thistle dry extract HRS*.

01/2008:1838

MINT OIL, PARTLY DEMENTHOLISED

Menthae arvensis aetheroleum partim mentholum depletum

DEFINITION

Essential oil obtained by steam distillation from the fresh, flowering aerial parts, recently gathered from *Mentha canadensis* L. (syn. *M. arvensis* L. var. *glabrata* (Benth) Fern., *M. arvensis* var. *piperascens* Malinv. ex Holmes), followed by partial separation of menthol by crystallisation.

CHARACTERS

Appearance: colourless, pale yellow or greenish-yellow liquid.

Characteristic odour.

IDENTIFICATION

First identification: B.

Second identification: A.

A. Thin-layer chromatography (*2.2.27*).

Test solution. Dissolve 0.1 mL of the substance to be examined in 1.0 mL of *toluene R*.

Reference solution. Dissolve 4 µL of *carvone R*, 4 µL of *pulegone R*, 10 µL of *menthyl acetate R*, 20 µL of *cineole R* and 50 mg of *menthol R* in 5 mL of *toluene R*.

Plate: *TLC silica gel F_{254} plate R*.

Mobile phase: *ethyl acetate R*, *toluene R* (5:95 *V/V*).

Application: 10 µL, as bands.

Development: over a path of 15 cm.

Drying: in air.

Detection A: examine in ultraviolet light at 254 nm.

Results A: see below the sequence of the zones present in the chromatograms obtained with the reference solution and the test solution. Furthermore, a quenching zone may be present in the upper third of the chromatogram obtained with the test solution.

Top of the plate	
Carvone and pulegone: a quenching zone	A quenching zone A quenching zone
Reference solution	**Test solution**

Detection B: spray with *anisaldehyde solution R* and heat at 100-105 °C for 5-10 min. Examine immediately in daylight.

Results B: see below the sequence of the zones present in the chromatograms obtained with the reference solution and the test solution. Furthermore, the zone due to cineole in the reference solution is absent in the chromatogram obtained with the test solution. No yellowish-brown zone below the intense reddish-violet zone is present in the chromatogram obtained with the test solution.

Top of the plate	
	An intense reddish-violet zone (near the solvent front)
Menthyl acetate: a bluish-violet zone	A bluish-violet zone (menthyl acetate)
	A strongly greenish zone
	A greenish zone
Carvone and pulegone: a reddish zone	A reddish zone
Cineole: a violet zone	
	A distinctly violet zone
Menthol: an intense blue zone	A very intense blue zone (menthol)
Reference solution	**Test solution**

B. Examine the chromatograms obtained in the test for chromatographic profile.

Results: the characteristic peaks in the chromatogram obtained with the test solution are approximately similar in retention time to those in the chromatogram obtained with the reference solution. Carvone may be absent from the chromatogram obtained with the test solution.

TESTS

Relative density (*2.2.5*): 0.888 to 0.910.

Refractive index (*2.2.6*): 1.456 to 1.470.

Optical rotation (*2.2.7*): − 16.0° to − 34.0°.

Acid value (*2.5.1*): maximum 1.0, determined on 5.00 g of the substance to be examined dissolved in 50 mL of the prescribed mixture of solvents.

Chromatographic profile. Gas chromatography (*2.2.28*): use the normalisation procedure.

Test solution. Dissolve 0.20 g of the substance to be examined in *hexane R* and dilute to 10.0 mL with the same solvent.

Reference solution. Dissolve 10 mg of *limonene R*, 20 mg of *cineole R*, 40 mg of *menthone R*, 10 mg of *isomenthone R*, 40 mg of *menthyl acetate R*, 20 mg of *isopulegol R*, 60 mg of *menthol R*, 20 mg of *pulegone R* and 10 mg of *carvone R* in *hexane R* and dilute to 10.0 mL with the same solvent.

Column:

- *material*: fused silica,
- *size*: *l* = 30 m (a film thickness of 1 µm may be used) to 60 m (a film thickness of 0.2 µm may be used), Ø = 0.25-0.53 mm,
- *stationary phase*: *macrogol 20 000 R*.

Carrier gas: *helium for chromatography R*.

Flow rate: 1.5 mL/min.

Split ratio: 1:100.

Temperature:

	Time (min)	Temperature (°C)
Column	0 - 10	60
	10 - 70	60 → 180
	70 - 75	180
Injection port		200
Detector		220

Detection: flame ionisation.

Injection: 1.0 µL.

Elution order: order indicated in the composition of the reference solution. Record the retention times of these substances.

System suitability: reference solution:

- *resolution*: minimum 1.5 between the peaks due to limonene and cineole.

Using the retention times determined from the chromatogram obtained with the reference solution, locate the components of the reference solution in the chromatogram obtained with the test solution.

Determine the percentage content of these components. The percentages are within the following ranges:

- *limonene*: 1.5 per cent to 7.0 per cent,
- *cineole*: maximum 1.5 per cent,
- *menthone*: 17.0 per cent to 35.0 per cent,
- *isomenthone*: 5.0 per cent to 13.0 per cent,
- *menthyl acetate*: 1.5 per cent to 7.0 per cent,
- *isopulegol*: 1.0 per cent to 3.0 per cent,
- *menthol*: 30.0 per cent to 50.0 per cent,
- *pulegone*: maximum 2.5 per cent,
- *carvone*: maximum 2.0 per cent.

The ratio of cineole content to limonene content is less than 1.

STORAGE

At a temperature not exceeding 25 °C.

01/2013:1833

MOTHERWORT

Leonuri cardiacae herba

DEFINITION

Whole or cut, dried flowering aerial parts of *Leonurus cardiaca* L.

Content: minimum 0.2 per cent of flavonoids, expressed as hyperoside ($C_{21}H_{20}O_{12}$; M_r 464.4) (dried drug).

IDENTIFICATION

A. The stem pieces are hairy, longitudinally striated, quadrangular, hollow, and up to about 10 mm wide; they bear opposite and decussate, petiolate leaves and, in the axils of the upper leaves, about 6-12 small flowers, arranged in sessile whorls forming a long, leafy spike. The lower leaves are ovate-orbicular, palmately 3- to 5-lobed, rarely 7-lobed, the lobes irregularly dentate. The upper leaves are entire or slightly trifid, lanceolate with a serrate margin and cuneate at the base. The upper surface of the leaves is green with scattered hairs, the lower surface is paler green, densely pubescent and shows a prominent palmate and reticulate venation. The flowers have a funnel-shaped calyx, 3 mm to 5 mm long with 5 stiff, recurved teeth; the corolla is 2-lipped, the upper lip pink and pubescent on the outer surface, the lower lip white with purplish spots; stamens 4, densely pubescent.

B. Microscopic examination (*2.8.23*). The powder is green. Examine under a microscope using *chloral hydrate solution R*. The powder shows the following diagnostic characters (Figure 1833.-1): numerous covering trichomes [A], whole [Aa] or fragmented [Ab], uniseriate, with warty walls, composed of 2-8 cells with slight swellings at the junctions, up to 1500 µm long; fragments of the upper epidermis, in surface view [B], with cells with straight or sinuous anticlinal walls [Ba], often accompanied by palisade parenchyma [Bb]; fragments of the lower epidermis, in surface view [C], with cells with sinuous anticlinal walls [Ca], diacytic stomata (*2.8.3*) [Cb], bearing glandular trichomes with a short unicellular stalk and a globular head composed of 8-16 cells [Cc], glandular trichomes with a uni- or bicellular stalk and a bi- or tetracellular head [Cd] and sometimes covering trichomes; fragments of the lamina, in transverse section [D], composed of epidermises bearing glandular trichomes with a globular head consisting of 8-16 cells [Da] or a bi- or tetracellular head [Db], a 1-layered palisade mesophyll extending almost halfway across the section [Dc], and a loosely arranged spongy parenchyma [Dd]; fragments of the calyx [G] with an epidermis consisting of polygonal cells bearing uni- or bicellular conical covering trichomes, with spiny walls [Ga], often associated with fusiform mesophyll cells with thick walls and containing small prism crystals of calcium oxalate [Gb]; isolated glandular trichomes [H], either with a multicellular stalk and a unicellular head from the anthers [Ha] or a uni- or multicellular stalk and bi- to tetracellular head [Hb]; spherical pollen grains, about 25-30 µm in diameter, with 3 pores and 3 furrows and a smooth exine [E]; thick-walled, lignified fibres [F]; fragments from the stem with spirally and annularly thickened vessels [K]; occasional fragments of pericarp [J] consisting of lobed cells with thick, pitted walls, each containing a single prism crystal of calcium oxalate [Ja].

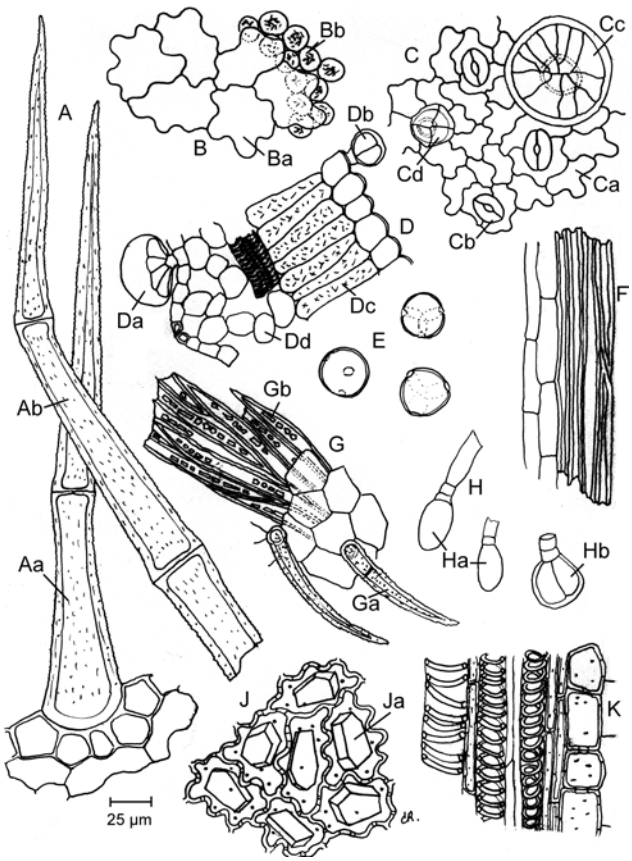

Figure 1833.-1. – *Illustration for identification test B of powdered herbal drug of motherwort*

C. Thin-layer chromatography (*2.2.27*).

Test solution. To 0.5 g of the powdered herbal drug (355) (*2.9.12*) add 5 mL of *methanol R*. Heat on a water-bath at 65 °C for 5 min with shaking. Cool and filter.

Reference solution. Dissolve 5 mg of *naphthol yellow S R* and 2.0 mg of *catalpol R* in 5.0 mL of *methanol R*.

Plate: *TLC silica gel plate R*.

Mobile phase: *glacial acetic acid R*, *water R*, *ethyl acetate R* (20:20:60 *V/V/V*).

Application: 20 µL as bands.

Development: over a path of 10 cm.

Drying: in air.

Detection: treat with *dimethylaminobenzaldehyde solution R2*, using about 5 mL for a plate 200 mm square; heat at 100-105 °C for 10 min until the spots appear; examine in daylight.

Results: see below the sequence of zones present in the chromatograms obtained with the reference solution and the test solution. Furthermore, other weak greyish-blue zones may be present in the chromatogram obtained with the test solution.

Top of the plate	
	A wide white zone
	A greyish-blue zone (iridoid)
Naphthol yellow S: an intense yellow zone	1 or 2 greyish-blue zones (iridoid)
Catalpol: a greyish-blue zone	
Reference solution	**Test solution**

TESTS

Foreign matter (*2.8.2*): maximum 2 per cent of brown or yellow leaves and maximum 2 per cent of other foreign matter.

Loss on drying (*2.2.32*): maximum 12.0 per cent, determined on 1.000 g of the powdered herbal drug (355) (*2.9.12*) by drying in an oven at 105 °C for 2 h.

Total ash (*2.4.16*): maximum 12.0 per cent.

ASSAY

Stock solution. In a 100 mL round-bottomed flask place 1.00 g of the powdered herbal drug (355) (*2.9.12*), add 1 mL of a 5 g/L solution of *hexamethylenetetramine R*, 20 mL of *acetone R* and 2 mL of *hydrochloric acid R1*. Boil the mixture under a reflux condenser for 30 min. Filter the liquid through a plug of absorbent cotton into a flask. Add the absorbent cotton to the residue in the round-bottomed flask and extract with 2 quantities, each of 20 mL, of *acetone R*, each time boiling under a reflux condenser for 10 min. Allow to cool and filter each extract through the plug of absorbent cotton into the flask. After cooling, filter the combined acetone extracts through a paper filter into a volumetric flask and dilute to 100.0 mL with *acetone R* by rinsing the flask and the paper filter. Introduce 20.0 mL of the solution into a separating funnel, add 20 mL of *water R* and shake the mixture with 1 quantity of 15 mL and then 3 quantities, each of 10 mL, of *ethyl acetate R*. Combine the ethyl acetate extracts in a separating funnel, wash with 2 quantities, each of 50 mL, of *water R*, filter the extracts over 10 g of *anhydrous sodium sulfate R* into a volumetric flask and dilute to 50.0 mL with *ethyl acetate R*.

Test solution. To 10.0 mL of the stock solution add 1 mL of *aluminium chloride reagent R* and dilute to 25.0 mL with a 5 per cent *V/V* solution of *glacial acetic acid R* in *methanol R*.

Compensation liquid. Dilute 10.0 mL of the stock solution to 25.0 mL with a 5 per cent *V/V* solution of *glacial acetic acid R* in *methanol R*.

Measure the absorbance (*2.2.25*) of the test solution after 30 min, by comparison with the compensation liquid at 425 nm. Calculate the percentage content of flavonoids, calculated as hyperoside, using the following expression:

$$\frac{A \times 1.25}{m}$$

i.e. taking the specific absorbance of hyperoside to be 500.

A = absorbance at 425 nm;

m = mass of the substance to be examined, in grams.

01/2011:1853

MULLEIN FLOWER

Verbasci flos

DEFINITION

Dried flower, reduced to the corolla and the androecium, of *Verbascum thapsus* L., *V. densiflorum* Bertol. (*V. thapsiforme* Schrad), and *V. phlomoides* L.

IDENTIFICATION

A. The corolla of *V. thapsus* is pale yellow, yellow or brown, funnel-shaped, about 20 mm in diameter, with 5 slightly unequal and spreading lobes. The corolla lobes are densely hairy on the outer surface, glabrous on the inner surface, with a fine network of light brown veins. There are 5 stamens, alternating with the petal lobes; 2 of these are long, with glabrous filaments, the other 3 shorter, with densely tomentose filaments. The anthers are attached transversely. In *V. phlomoides* the corolla is up to about 30 mm in diameter, bright yellow or orange, and the anthers are obliquely attached to the filaments. The corolla

Herbal drugs

of *V. densiflorum*, about 30 mm in diameter, is almost flat and deeply divided into 5 slightly unequal lobes, with rounded apices.

B. Reduce to a powder (355) (*2.9.12*). The powder is yellow or yellowish-brown. Examine under a microscope using *chloral hydrate solution R*. The powder shows the following diagnostic characters (Figure 1853.-1): many covering trichomes from the corolla, whole and fragmented, pluricellular, of the candelabra type, with a central uniseriate axis from which whorls of branch cells arise at the position of the cross walls and at the apex, in side view [A, B] or in surface view [F]; the covering trichomes from the stamen filaments [G] are unicellular, long, thin-walled and tubular, have a distinctly granular or striated surface with a sharp tip [Ga] or sometimes with a club-shaped tip [Gb, Gc]; numerous pollen grains, ovoid with a finely granular exine with 3 pores [D]; fragments of the fibrous layer of the anther with thickened walls giving a characteristic star-shaped appearance [C]; yellow fragments of the petals, in surface view [E], the epidermal cells polygonal and isodiametric [Ea]; fragments of the underlying mesophyll consisting of irregular parenchymatous cells [Eb] sometimes accompanied by spiral vessels [Ec].

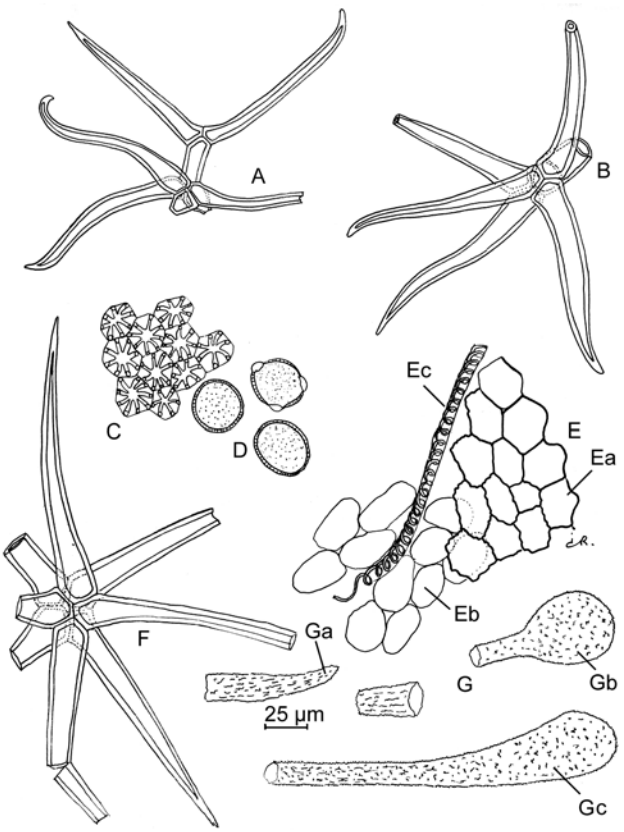

Figure 1853.-1. – *Illustration for identification test B of powdered herbal drug of mullein flower*

C. Thin-layer chromatography (*2.2.27*).

Test solution. Heat 1.0 g of the powdered herbal drug (355) (*2.9.12*) in 10 mL of *methanol R* in a water-bath at 60 °C for 5 min, with stirring. Cool and filter.

Reference solution. Dissolve 1 mg of *caffeic acid R*, 2.5 mg of *hyperoside R* and 2.5 mg of *rutin R* in *methanol R* and dilute to 10 mL with the same solvent.

Plate: *TLC silica gel plate R*.

Mobile phase: *anhydrous formic acid R*, *water R*, *methyl ethyl ketone R*, *ethyl acetate R* (10:10:30:50 *V/V/V/V*).

Application: 10 µL of the reference solution and 30 µL of the test solution, as bands.

Development: over a path of 15 cm.

Drying: at 100-105 °C.

Detection: spray the warm plate with a 10 g/L solution of *diphenylboric acid aminoethyl ester R* in *methanol R*, then with a 50 g/L solution of *macrogol 400 R* in *methanol R*; allow to dry in air for 30 min and examine in ultraviolet light at 365 nm.

Results: see below the sequence of zones present in the chromatograms obtained with the reference solution and the test solution. Furthermore, other faint zones may be present in the chromatogram obtained with the test solution.

Top of the plate	
	A yellow or yellowish-green fluorescent zone
Caffeic acid: a greenish-blue fluorescent zone	
	A bluish fluorescent zone
	A greenish fluorescent zone
	A yellowish-green fluorescent zone
	A bluish fluorescent zone
Hyperoside: a yellowish-brown fluorescent zone	
	A greenish fluorescent zone
Rutin: a yellowish-brown fluorescent zone	
Reference solution	**Test solution**

D. Boil 1.0 g of the powdered herbal drug (355) (*2.9.12*) with 15 mL of *water R* for 1 min. Filter. Add 1 mL of *hydrochloric acid R* and boil for 1 min. A greenish-blue colour develops and, after a few minutes, cloudiness appears and then a blackish precipitate (iridoids).

TESTS

Foreign matter (*2.8.2*): maximum 5 per cent of brown petals and maximum 2 per cent of fragments of the calyx and other foreign matter, determined on 20 g.

Swelling index (*2.8.4*): minimum 9, determined on the powdered herbal drug (710) (*2.9.12*), moistened with 2 mL of *ethanol (96 per cent) R*.

Loss on drying (*2.2.32*): maximum 12.0 per cent, determined on 1.000 g of the powdered herbal drug (710) (*2.9.12*) by drying in an oven at 105 °C for 2 h.

Total ash (*2.4.16*): maximum 6.0 per cent.

Ash insoluble in hydrochloric acid (*2.8.1*): maximum 2.0 per cent.

STORAGE

In an airtight container.

01/2008:1349
corrected 6.0

MYRRH

Myrrha

DEFINITION

Gum-resin, hardened in air, obtained by incision or produced by spontaneous exudation from the stem and branches of *Commiphora molmol* Engler and/or other species of *Commiphora*.

CHARACTERS

Bitter taste.

IDENTIFICATION

A. The light or dark orange-brown, irregular or roundish grains or pieces of different size show components of various colours. Their surface is mostly covered with grey or yellowish-brown dust.

B. Reduce to a powder (355) (*2.9.12*). The powder is brownish-yellow or reddish-brown. Examine under a microscope, using *chloral hydrate solution R*. The powder shows the following diagnostic characters: a few tissue fragments from the original plants including: reddish-brown cork fragments; single or grouped polyhedral or elongated stone cells with partly strongly thickened, pitted and lignified walls with a brownish content; fragments of thin-walled parenchyma and sclerenchymatous fibres; irregular prismatic or polyhedral crystals of calcium oxalate, about 10-25 µm in size.

C. Examine the chromatograms obtained in the test for *Commiphora mukul*.

Detection: spray with *anisaldehyde solution R*, and examine in daylight while heating at 100-105 °C for 10 min.

Results: the chromatogram obtained with the reference solution shows in the lower third an orange-red zone (thymol) and in the middle third a violet zone (anethole). The chromatogram obtained with the test solution shows an intense violet zone (furanoeudesma-1,3-diene), exceeding the other zones in size and intensity, above the zone of anethole in the chromatogram obtained with the reference solution; a violet zone similar in position to the zone of anethole in the chromatogram obtained with the reference solution; 2 intense violet zones similar in position to the zone of thymol in the chromatogram obtained with the reference solution, the upper one due to curzerenone and the lower one to 2-methoxyfuranodiene. Further mostly violet zones are present in the chromatogram obtained with the test solution.

TESTS

Commiphora mukul. Thin-layer chromatography (*2.2.27*).

Test solution. To 0.5 g of the powdered herbal drug (355) (*2.9.12*) add 5.0 mL of *ethanol (96 per cent) R* and warm the mixture on a water-bath for 2-3 min. Cool and filter.

Reference solution. Dissolve 10 mg of *thymol R* and 40 µL of *anethole R* in 10 mL of *ethanol (96 per cent) R*.

Plate: *TLC silica gel plate R*.

Mobile phase: *ethyl acetate R*, *toluene R* (2:98 *V/V*).

Application: 10 µL, as bands.

Development: over a path of 15 cm.

Drying: in air.

Detection: examine in ultraviolet light at 365 nm.

Results: the chromatogram obtained with the test solution shows no blue or violet fluorescent zones in the lower third of the chromatogram.

Matter insoluble in ethanol: maximum 70 per cent.

Place 1.00 g of the powdered herbal drug (250) (*2.9.12*) in a flask. Add 30 mL of *ethanol (96 per cent) R* and shake vigorously for 10 min. Filter the supernatant through a tared sintered-glass filter (16) (*2.1.2*) avoiding the transfer of sediment from the flask. Repeat the extraction with 2 quantities, each of 20 mL, of *ethanol (96 per cent) R*. Quantitatively transfer the sediment to the filter by rinsing the flask with *ethanol (96 per cent) R*. Dry the filter and the residue in an oven at 100-105 °C and weigh.

Loss on drying (*2.2.32*): maximum 15.0 per cent, determined on 1.000 g of the powdered herbal drug (355) (*2.9.12*) by drying in an oven at 105 °C for 2 h.

Total ash (*2.4.16*): maximum 7.0 per cent.

01/2008:1877

MYRRH TINCTURE

Myrrhae tinctura

DEFINITION

Tincture produced from *Myrrh (1349)*.

PRODUCTION

The tincture is produced from 1 part of the drug and 5 parts of ethanol (90 per cent *V/V*) by a suitable procedure.

CHARACTERS

Clear yellowish-brown or orange-brown liquid.

IDENTIFICATION

Thin-layer chromatography (*2.2.27*).

Test solution. Dilute 5 mL of the tincture to be examined to 10 mL with *alcohol R*.

Reference solution. Dissolve 10 mg of *thymol R* and 40 µL of *anethole R* in 10 mL of *ether R*.

Plate: *TLC silica gel plate R*.

Mobile phase: *ethyl acetate R*, *toluene R* (2:98 *V/V*).

Application: 10 µL, as bands.

Development: over a path of 15 cm.

Drying: in air.

Detection: spray with *anisaldehyde solution R* and examine in daylight whilst heating at 100-105 °C for 10 min.

Results: see below the sequence of the zones present in the chromatograms obtained with the reference solution and the test solution. Furthermore, other zones mostly violet, are present in the chromatogram obtained with the test solution.

Top of the plate	
	An intense violet zone exceeding the others in size and intensity (furanoeudesma-1,3-diene)
Anethole: a violet zone	A violet zone
Thymol: an orange-red zone	Two intense violet zones (curzerenone and below 2-methoxyfuranodiene)
Reference solution	**Test solution**

TESTS

Ethanol content (*2.9.10*): 82 per cent *V/V* to 88 per cent *V/V*.

Methanol and 2-propanol (*2.9.11*): maximum 0.05 per cent *V/V* of methanol and maximum 0.05 per cent *V/V* of 2-propanol.

Dry residue (*2.8.16*): minimum 4.0 per cent *m/m*.

STORAGE

Plastic containers are not recommended.

01/2008:1821
corrected 6.0

NARROW-LEAVED CONEFLOWER ROOT

Echinaceae angustifoliae radix

DEFINITION

Dried, whole or cut underground parts of *Echinacea angustifolia* (D.C.).

Content: minimum 0.5 per cent of echinacoside ($C_{35}H_{46}O_{20}$; M_r 786.5) (dried drug).

Herbal drugs

IDENTIFICATION

First identification: *A, B, C.*

Second identification: *A, B, D.*

A. The root crown is up to about 30 mm in diameter and shows only a few stem bases. The roots are not very numerous, up to about 15 mm in diameter, cylindrical or slightly tapering and sometimes spirally twisted, the outer surface is pale brown to yellowish-brown. The fracture is short, dark brown with a radiate structure.

B. Reduce to a powder (355) (*2.9.12*). The powder is greyish-brown. Examine under a microscope using *chloral hydrate solution R*. The powder shows the following diagnostic characters: narrow lignified fibres (up to about 800 µm in length and 50 µm in diameter) joined together in long bundles surrounded by phytomelanin deposits; lignified reticulately or scalariformly thickened vessels (up to about 60 µm in diameter); abundant sclereids occuring singly or, more usually, in groups of 2 to 10, mostly elongated to rectangular, (up to about 150 µm in length and 40 µm wide), with intercellular spaces filled with phytomelanin deposit; fragments of oleoresin canal (80-150 µm in diameter) with yellowish-orange to reddish-brown content; groups of squarish to rectangular cells, about 30-45 µm from the outer layers of the roots; abundant fine-walled pitted parenchyma with sphaerocrystalline masses of inulin.

C. Examine the chromatograms obtained in the test for *Echinacea purpurea*.

Results: see below the sequence of zones present in the chromatograms obtained with the reference solution and the test solution. Furthermore, other faint dark blue fluorescent zones may be present between the zones of echinacoside and cynarin in the chromatogram obtained with the test solution.

Top of the plate	
Caffeic acid: a strong blue fluorescent zone	
Cynarin: a strong greenish fluorescent zone	A greenish fluorescent zone (cynarin)
Echinacoside: a strong greenish fluorescent zone	A strong greenish fluorescent zone (echinacoside)
Reference solution	**Test solution**

D. Examine the chromatograms obtained in the assay.

Results: the chromatogram obtained with the test solution shows 1 major peak due to echinacoside and a minor peak due to cynarin. Peaks due to caffeic acid, caftaric acid and chlorogenic acid are minor peaks or may be absent.

TESTS

Foreign matter (*2.8.2*): maximum 3 per cent.

Echinacea purpurea. Thin layer chromatography (*2.2.27*).

Test solution. To 1.0 g of the powdered herbal drug (355) (*2.9.12*) add 10 mL of *methanol R*, treat in an ultrasonic bath for 5 min. Centrifuge and use the supernatant solution.

Reference solution. Dissolve 1 mg of *echinacoside R*, 1 mg of *cynarin R* and 0.5 mg of *caffeic acid R* in 5.0 mL of *methanol R*.

Plate: *TLC silica gel F_{254} plate R* (5-40 µm) [or *TLC silica gel F_{254} plate R* (2-10 µm)].

Mobile phase: *anhydrous formic acid R*, *water R*, *methyl ethyl ketone R*, *ethyl acetate R* (3:3:9:15 *V/V/V/V*).

Application: 25 µL [or 5 µL] of the test solution and 10 µL [or 2 µL] of the reference solution as bands.

Development: over a path of 15 cm [or 5 cm].

Drying: in a stream of cold air for about 10 min followed by 2 min at 100-105 °C.

Detection: treat the hot plate using a 5 g/L solution of *diphenylboric acid aminoethyl ester R* in *ethyl acetate R*; examine in ultraviolet light at 365 nm after 30 min.

Results: the chromatogram obtained with the test solution shows no greenish fluorescent zone just below the zone due to caffeic acid in the chromatogram obtained with the reference solution and no greenish fluorescent zone below the zone due to cynarin in the chromatogram obtained with the reference solution. In the chromatogram obtained with the test solution no zones apart from faint dark blue fluorescent zones are visible between the zones due to echinacoside and cynarin.

Loss on drying (*2.2.32*): maximum 12.0 per cent, determined on 1.000 g of the powdered herbal drug (355) (*2.9.12*) by drying in an oven at 105 °C for 2 h.

Total ash (*2.4.16*): maximum 9.0 per cent.

Ash insoluble in hydrochloric acid (*2.8.1*): maximum 3.0 per cent.

ASSAY

Liquid chromatography (*2.2.29*).

Test solution. In a 100 mL volumetric flask place 0.500 g of the powdered herbal drug (355) (*2.9.12*) and add 80 mL of *ethanol (70 per cent V/V) R*. Treat in an ultrasonic bath for 15 min and dilute to 100.0 mL with *ethanol (70 per cent V/V) R*. Mix the suspension and allow to stand for a few minutes so that visible solids settle. Filter a suitable proportion of the solution through a membrane filter (nominal pore size 0.45 µm) before injection.

Reference solution. Dissolve 10.0 mg of *chlorogenic acid CRS* and 10.0 mg of *caffeic acid R* in *ethanol (70 per cent V/V) R*, sonicate for 15 min and dilute to 10.0 mL with the same solvent. Dilute 4.0 mL of this solution to 100.0 mL with *ethanol (70 per cent V/V) R*.

Column:

- *size*: *l* = 0.25 m, Ø = 4.6 mm;
- *stationary phase*: *octadecylsilyl silica gel for chromatography R* (5 µm);
- *temperature*: 35 °C.

Mobile phase:

- *mobile phase A*: *phosphoric acid R*, *water R* (1:999 *V/V*);
- *mobile phase B*: *acetonitrile R*;

Time (min)	Mobile phase A (per cent *V/V*)	Mobile phase B (per cent *V/V*)
0	90	10
0 - 13	90 → 78	10 → 22
13 - 14	78 → 60	22 → 40
14 - 14.5	60	40

Flow rate: 1.5 mL/min.

Detection: spectrophotometer at 330 nm.

Injection: 10 µL.

Relative retention with reference to chlorogenic acid: caftaric acid = about 0.8; caffeic acid = about 1.5; cynarin = about 1.6; echinacoside = about 1.7; cichoric acid = about 2.3.

System suitability: reference solution:

- *resolution*: minimum 10 between the peaks due to caffeic acid and chlorogenic acid.

Locate the peaks due to caffeic acid and chlorogenic acid using the chromatogram obtained with the reference solution. Locate the peaks due to echinacoside and cynarin using the chromatogram in Figure 1821.-1.

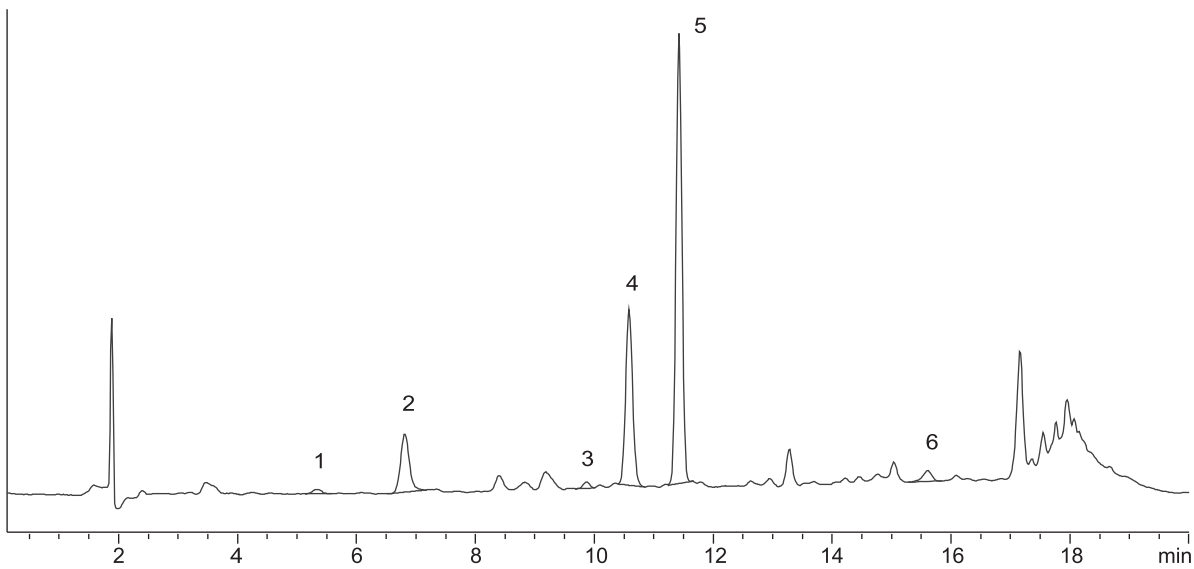

1. caftaric acid
2. chlorogenic acid
3. caffeic acid
4. cynarin
5. echinacoside
6. cichoric acid

Figure 1821.-1. – *Chromatogram for the assay of echinacoside in narrow-leaved coneflower root*

Calculate the percentage content of echinacoside from the following expression:

$$\frac{A_1 \times C_2 \times 100 \times 2.221}{A_2 \times C_1}$$

A_1 = area of the peak due to echinacoside in the chromatogram obtained with the test solution;

A_2 = area of the peak due to chlorogenic acid in the chromatogram obtained with the reference solution;

C_1 = concentration of the test solution, in milligrams per millilitre;

C_2 = concentration of chlorogenic acid in the reference solution, in milligrams per millilitre;

2.221 = peak correlation factor between chlorogenic acid and echinacoside.

STORAGE

Store uncomminuted.

01/2008:1175

NEROLI OIL

Neroli aetheroleum

DEFINITION

Neroli oil is obtained by steam distillation from the fresh flowers of *Citrus aurantium* L. subsp. *aurantium* L. (*C. aurantium* L. subsp. *amara* Engl.).

CHARACTERS

Appearance: clear, pale-yellow or dark-yellow liquid.

Characteristic odour.

IDENTIFICATION

First identification: *B*.

Second identification: *A*.

A. Examine the chromatograms obtained in the test for bergapten.

Results A: see below the sequence of zones present in the chromatograms obtained with the reference solution and the test solution. Furthermore other zones may be present in the chromatograms obtained with the test solution.

Top of the plate	
———	———
Methyl anthranilate: a blue fluorescent zone	A faint blue fluorescent zone (methyl anthranilate)
Bergapten: a greenish-yellow fluorescent zone	
———	———
Reference solution	**Test solution**

Detection B: spray with *anisaldehyde solution R*; heat at 100-105 °C for 10 min; examine the chromatograms in ultraviolet light at 365 nm.

Results B: see below the sequence of zones present in the chromatograms obtained with the reference solution and the test solution. In the chromatogram obtained with the test solution the zone due to linalol is more intense than the zone due to linalyl acetate.

Top of the plate	
	A brown fluorescent zone
Linalyl acetate: a brownish-red fluorescent zone	An intense brownish-red fluorescent zone (linalyl acetate)
———	———
Methyl anthranilate: a blue fluorescent zone	A faint blue fluorescent zone (methyl anthranilate)
	A faint brownish-red fluorescent zone
Linalol: a brownish-red fluorescent zone	A brownish-red fluorescent zone (linalol)
Bergapten: a greenish-yellow fluorescent zone	
———	———
	Several blue and brownish-red fluorescent zones
Reference solution	**Test solution**

B. Examine the chromatograms obtained in the test for chromatographic profile.

Herbal drugs

Results: the principal peaks in the chromatogram obtained with the test solution are similar in retention time to the principal peaks in the chromatogram obtained with the reference solution.

TESTS

Relative density (*2.2.5*): 0.863 to 0.880.

Refractive index (*2.2.6*): 1.464 to 1.474.

Optical rotation (*2.2.7*): + 1.5° to + 11.5°.

Acid value (*2.5.1*): maximum 2.0.

Bergapten. Thin-layer chromatography (*2.2.27*).

Test solution. Dissolve 0.1 g of the substance to be examined in *ethanol (96 per cent) R* and dilute to 5.0 mL with the same solvent.

Reference solution. Dissolve 2 µL of *methyl anthranilate R*, 10 µL of *linalyl acetate R*, 20 µL of *linalol R* and 5 mg of *bergapten R* in *ethanol (96 per cent) R* and dilute to 10.0 mL with the same solvent.

Plate: *TLC silica gel plate R* (5-40 µm) [or *TLC silica gel plate R* (2-10 µm)].

Mobile phase: *ethyl acetate R*, *toluene R* (15:85 *V/V*).

Application: 10 µL [or 2 µL] as bands.

Development: over a path of 15 cm [or 8 cm].

Drying: in air.

Detection: examine in ultraviolet light at 365 nm.

Results: the chromatogram obtained with the test solution does not show a zone corresponding to the zone due to bergapten in the chromatogram obtained with the reference solution.

Chromatographic profile. Gas chromatography (*2.2.28*): use the normalisation procedure.

Test solution. The substance to be examined.

Reference solution (a). Dissolve 20 µL of *β-pinene R*, 5 mg of *sabinene R*, 40 µL of *limonene R*, 40 µL of *linalol R*, 20 µL of *linalyl acetate R*, 5 mg of *α-terpineol R*, 5 µL of *neryl acetate R*, 5 µL of *geranyl acetate R*, 5 µL of *trans-nerolidol R*, 5 µL of *methyl anthranilate R* and 5 µL *(E,E)-farnesol R* in 2 mL of *heptane R*.

Reference solution (b). Dissolve 5 µL of *methyl anthranilate R* in *heptane R* and dilute to 10 mL with the same solvent.

Column:

- *material*: fused silica,
- *size*: *l* = 60 m, Ø = 0.25 mm,
- *stationary phase*: *macrogol 20 000 R* (film thickness 0.25 µm).

Carrier gas: *helium for chromatography R*.

Flow rate: 1.5 mL/min.

Split ratio: 1:100.

Temperature:

	Time (min)	Temperature (°C)
Column	0 - 4	75
	4 - 42.8	75 → 230
	42.8 - 63	230
Injection port		270
Detector		270

Detection: flame ionisation.

Injection: 0.2 µL.

Elution order: order indicated in the composition of reference solution (a). Record the retention times of these substances.

System suitability: reference solution (a):

- *resolution*: minimum 1.5 between the peaks due to β-pinene and sabinene.

Using the retention times determined from the chromatogram obtained with reference solution (a), locate the components of reference solution (a) in the chromatogram obtained with the test solution.

Limits:

- *β-pinene*: 7.0 per cent to 17.0 per cent,
- *limonene*: 9.0 per cent to 18.0 per cent,
- *linalol*: 28.0 per cent to 44.0 per cent,
- *linalyl acetate*: 2.0 per cent to 15.0 per cent,
- *α-terpineol*: 2.0 per cent to 5.5 per cent,
- *neryl acetate*: maximum 2.5 per cent,
- *geranyl acetate*: 1.0 per cent to 5.0 per cent,
- *trans-nerolidol*: 1.0 per cent to 5.0 per cent,
- *methyl anthranilate*: 0.1 per cent to 1.0 per cent,
- *(E,E)-farnesol*: 0.8 per cent to 4.0 per cent,
- *disregard limit*: area of the peak in the chromatogram obtained with reference solution (b).

Chiral purity. Gas chromatography (*2.2.28*).

Test solution. Dissolve 20 mg of the substance to be examined in *pentane R* and dilute to 10.0 mL with the same solvent.

Reference solution. To 10 µL of *linalol R* add 10 µL of *linalyl acetate R*. Dilute to 10.0 mL with *pentane R*.

Column:

- *material*: fused silica,
- *size*: *l* = 25 m, Ø = 0.25 mm,
- *stationary phase*: *modified β-cyclodextrin for chiral chromatography R* (film thickness 0.25 µm).

Carrier gas: *helium for chromatography R*.

Flow rate: 1.3 mL/min.

Split ratio: 1:30.

Temperature:

	Time (min)	Temperature (°C)
Column	0 - 65	50 → 180
Injection port		230
Detector		230

Detection: flame ionisation.

Injection: 1 µL.

System suitability: reference solution:

- *resolution*: minimum 5.5 between the peaks due to (*R*)(–)-linalol (1st peak) and (*S*)(+)-linalol (2nd peak); minimum 2.7 between the peaks due to (*R*)(–)-linalyl acetate (3rd peak) and (*S*)(+)-linalyl acetate 4th peak).

Calculate the percentage content of the specified (*S*)-enantiomers from the following expression:

$$\frac{A_1}{A_1 + A_2} \times 100$$

A_1 = area of the corresponding (*S*)-enantiomer,

A_2 = area of the corresponding (*R*)-enantiomer.

Limits:

- (*S*)(+)-linalol: maximum 30 per cent,
- (*S*)(+)-linalyl acetate: maximum 5 per cent.

STORAGE

At a temperature not exceeding 25 °C.

Herbal drugs

01/2011:1897

NETTLE LEAF

Urticae folium

DEFINITION

Whole or cut dried leaves of *Urtica dioica* L., *Urtica urens* L., or a mixture of the 2 species.

Content: minimum 0.3 per cent for the sum of caffeoylmalic acid and chlorogenic acid, expressed as chlorogenic acid ($C_{16}H_{18}O_9$; M_r 354.3) (dried drug).

IDENTIFICATION

A. The leaves are dark green, dark greyish-green or brownish-green on the upper surface, paler on the lower surface; scattered stinging hairs occur on both surfaces, also small covering trichomes that are more numerous along the margins and on the veins on the lower surface. The lamina is strongly shrunken, ovate or oblong, up to 100 mm long and 50 mm wide, with a coarsely serrate margin and a cordate or rounded base. The venation is reticulate and distinctly prominent on the lower surface. The petiole is green or brownish-green, rounded or flattened, about 1 mm wide, longitudinally furrowed and twisted; it bears stinging hairs and covering trichomes.

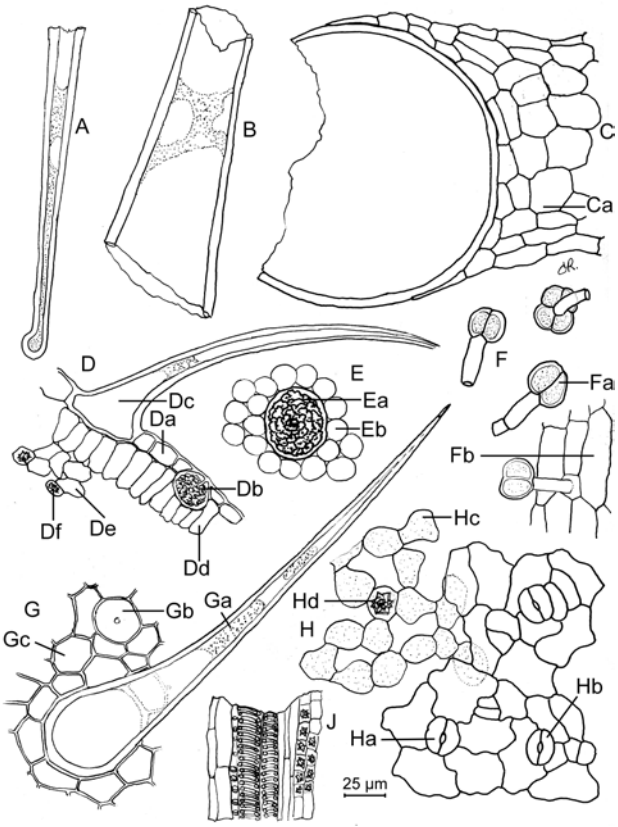

Figure 1897.-1. – *Illustration for identification test B of powdered herbal drug of nettle leaf*

B. Reduce to a powder (355) (*2.9.12*). The powder is green or greyish-green. Examine under a microscope using *chloral hydrate solution R*. The powder shows the following diagnostic characters (Figure 1897.-1): fragments of unicellular stinging hairs [A, B, C], up to 2 mm long, composed of an elongated tapering cell with a slightly swollen stinging tip that readily breaks off, arising from a raised, multicellular base [Ca]; small glandular trichomes [F] (35-65 µm), with a uni- or bicellular stalk and a bi- or quadricellular head, isolated [Fa], or on fragments of the epidermis [Fb]; fragments of the upper epidermis of the leaves in surface view [G] or in transverse section [D] showing slightly sinuous cells [Da, Gc], unicellular, straight or slightly curved covering trichomes, enlarged at the base, up to 700 µm long [Dc, Ga] and abundant large cystoliths [Db, Ea, Gb], empty or containing dense, granular masses of calcium carbonate; palisade parenchyma in surface view [E], with rounded cells [Eb] surrounding cystoliths [Ea], or in transverse section [Dd]; fragments of lower epidermis of leaves showing sinuous or wavy-walled cells [H], anomocytic [Ha] or anisocytic stomata [Hb] (*2.8.3*) accompanied by spongy mesophyll in surface view [Hc] and in transverse section [De] containing small cluster crystals of calcium oxalate in surface view [Hd] and in transverse section [Df]; occasional small groups of vessels, accompanied by parenchyma containing cluster crystals of calcium oxalate [J].

C. Thin-layer chromatography (*2.2.27*).

Test solution. To 1 g of the powdered herbal drug (355) (*2.9.12*) add 10 mL of *methanol R*. Boil under a reflux condenser for 15 min. Cool and filter. Evaporate to dryness *in vacuo* at 40 °C. Dissolve the residue in 2 mL of *methanol R*.

Reference solution. Dissolve 1 mg of *scopoletin R* and 2 mg of *chlorogenic acid R* in 20 mL of *methanol R*.

Plate: *TLC silica gel plate R* (5-40 µm) [or *TLC silica gel plate R* (2-10 µm)].

Mobile phase: *anhydrous formic acid R*, *methanol R*, *water R*, *ethyl acetate R* (2.5:4:4:50 *V/V/V/V*).

Application: 10 µL [or 4 µL] as bands of 10 mm [or 8 mm].

Development: over a path of 8 cm [or 6 cm].

Drying: in air.

Detection: heat at 100 °C for 5 min; spray the still-warm plate with a 10 g/L solution of *diphenylboric acid aminoethyl ester R* in *methanol R*; examine in ultraviolet light at 365 nm.

Results: see below the sequence of zones present in the chromatograms obtained with the reference solution and the test solution. Furthermore, other faint blue or yellow fluorescent zones may be present in the lower half of the chromatogram obtained with the test solution.

Top of the plate	
	2 red zones
Scopoletin: an intense blue fluorescent zone	A blue fluorescent zone (scopoletin)
	A blue fluorescent zone
Chlorogenic acid: a blue fluorescent zone	A blue fluorescent zone (chlorogenic acid)
	A brownish-yellow zone
Reference solution	**Test solution**

TESTS

Foreign matter (*2.8.2*): maximum 5 per cent of stems and maximum 5 per cent of other foreign matter (including inflorescences).

Loss on drying (*2.2.32*): maximum 12.0 per cent, determined on 1.000 g of the powdered herbal drug (355) (*2.9.12*) by drying in an oven at 105 °C for 2 h.

Total ash (*2.4.16*): maximum 20.0 per cent.

Ash insoluble in hydrochloric acid (*2.8.1*): maximum 4.0 per cent.

Herbal drugs

ASSAY

Liquid chromatography (*2.2.29*).

Test solution. To 0.200 g of the powdered herbal drug (355) (*2.9.12*) add 25.0 mL of a 40 per cent *V/V* solution of *methanol R*. Extract for 30 min in an ultrasonic bath at 40 °C and filter.

Reference solution. Dissolve 10.0 mg of *chlorogenic acid CRS* in 100.0 mL of a 40 per cent *V/V* solution of *methanol R*. Dilute 5.0 mL of this solution to 25.0 mL with a 40 per cent *V/V* solution of *methanol R*.

Precolumn:
- *size*: *l* = 4 mm, Ø = 4 mm;
- *stationary phase*: *end-capped octadecylsilyl silica gel for chromatography R* (5 µm).

Column:
- *size*: *l* = 0.125 m, Ø = 4 mm;
- *stationary phase*: *end-capped octadecylsilyl silica gel for chromatography R* (5 µm);
- *temperature*: 25 °C.

Mobile phase:
- *mobile phase A*: mix 15 volumes of *methanol R* and 85 volumes of *water R* and adjust to pH 2.0 with *dilute phosphoric acid R*;
- *mobile phase B*: *methanol R*;

Time (min)	Mobile phase A (per cent *V/V*)	Mobile phase B (per cent *V/V*)
0 - 1	100	0
1 - 25	100 → 85	0 → 15
25 - 35	85	15
35 - 36	85 → 0	15 → 100

Flow rate: 1 mL/min.

Detection: spectrophotometer at 330 nm.

Injection: 20 µL.

Relative retention with reference to chlorogenic acid (retention time = about 13 min): caffeoylmalic acid = about 2.2.

Calculate the percentage content of caffeoylmalic acid and chlorogenic acid, expressed as chlorogenic acid, using the following expression:

$$\frac{A_1 \times m_2 \times p}{A_2 \times m_1 \times 20}$$

A_1 = sum of the areas of the peaks due to caffeoylmalic acid and chlorogenic acid in the chromatogram obtained with the test solution;

A_2 = area of the peak due to chlorogenic acid in the chromatogram obtained with the reference solution;

m_1 = mass of the herbal drug to be examined used to prepare the test solution, in grams;

m_2 = mass of *chlorogenic acid CRS* used to prepare the reference solution, in grams;

p = percentage content of chlorogenic acid in *chlorogenic acid CRS*.

07/2012:2468

NIAOULI OIL, CINEOLE TYPE

Niaouli typo cineolo aetheroleum

DEFINITION

Essential oil obtained by steam distillation from young leafy branches of *Melaleuca quinquenervia* (Cav.) S.T.Blake.

CHARACTERS

Appearance: colourless or pale yellow liquid.

Aromatic odour of cineole.

IDENTIFICATION

First identification: B.

Second identification: A.

A. Thin-layer chromatography (*2.2.27*).

Test solution. Dissolve 100 µL of the essential oil to be examined in *toluene R* and dilute to 10.0 mL with the same solvent.

Reference solution. Dissolve 25 µL of *trans-nerolidol R* and 50 µL of *cineole R* in *toluene R* and dilute to 5.0 mL with the same solvent.

Plate: *TLC silica gel plate R* (5-40 µm) [or *TLC silica gel plate R* (2-10 µm)].

Mobile phase: *ethyl acetate R*, *toluene R* (5:95 *V/V*).

Application: 10 µL [or 2 µL] as bands of 10 mm [or 8 mm].

Development: over a path of 15 cm [or 6 cm].

Drying: in air.

Detection: treat with *anisaldehyde solution R* and heat at 100-105 °C for 3 min; examine in daylight.

Results: see below the sequence of zones present in the chromatograms obtained with the reference solution and the test solution. Furthermore, other faint zones may be present in the chromatogram obtained with the test solution.

Top of the plate	
———	———
	A faint grey zone
	A purple zone
1,8-Cineole: a violet-brown zone	An intense violet-brown zone (1,8-cineole)
trans-Nerolidol: a dark violet zone	
———	———
	An intense violet-brown zone
	A violet-brown zone
Reference solution	**Test solution**

B. Examine the chromatograms obtained in the test for chromatographic profile.

Results: the characteristic peaks in the chromatogram obtained with the test solution are similar in retention time to those in the chromatogram obtained with reference solution (a).

TESTS

Relative density (*2.2.5*): 0.904 to 0.925.

Refractive index (*2.2.6*): 1.463 to 1.472.

Optical rotation (*2.2.7*): – 4° to + 1°.

Methyleugenol and isomethyleugenol. Gas chromatography (*2.2.28*) as described in the test for chromatographic profile with the following modifications.

Reference solution. Dissolve 5 µL of *methyleugenol R* and 5 µL of *isomethyleugenol R* in *heptane R* and dilute to 50.0 mL with the same solvent. Dilute 0.5 mL of the solution to 5.0 mL with *heptane R*.

Elution order: order indicated in the composition of the reference solution; record the retention times of methyleugenol and isomethyleugenol.

Herbal drugs

Identification of peaks: using the retention times determined from the chromatogram obtained with the reference solution, locate the components of the reference solution in the chromatogram obtained with the test solution.

Limits:

- *methyleugenol*: maximum 0.05 per cent;
- *isomethyleugenol*: maximum 0.05 per cent.

Chromatographic profile. Gas chromatography (*2.2.28*): use the normalisation procedure.

Test solution. Dilute 0.2 mL of the essential oil to be examined to 10.0 mL with *heptane R*.

Reference solution (a). Dilute 10 µL of *α-pinene R*, 5 µL of *β-pinene R*, 10 µL of *limonene R*, 50 µL of *cineole R*, 5 µL of *p-cymene R*, 5 µL of *benzaldehyde R*, 5 mg of *α-terpineol R* and 5 µL of *trans-nerolidol R* in *heptane R* and dilute to 10 mL with the same solvent.

Reference solution (b). Dissolve 5 µL of *limonene R* in *heptane R* and dilute to 50.0 mL with the same solvent. Dilute 0.5 mL of the solution to 5.0 mL with *heptane R*.

Column:

- *material*: fused silica;
- *size*: *l* = 60 m, Ø = 0.25 mm;
- *stationary phase*: *macrogol 20 000 R* (film thickness 0.25 µm).

Carrier gas: *helium for chromatography R*.

Flow rate: 1.3 mL/min.

Split ratio: 1:50.

Temperature:

	Time (min)	Temperature (°C)
Column	0 - 5	65
	5 - 65	65 → 185
	65 - 80	185 → 230
Injection port		230
Detector		250

Detection: flame ionisation.

Injection: 1 µL.

Elution order: order indicated in the composition of reference solution (a); record the retention times of these substances.

Identification of peaks: using the retention times determined from the chromatogram obtained with reference solution (a), locate the components of reference solution (a) in the chromatogram obtained with the test solution; the peak due to viridiflorol elutes with a relative retention of about 1.02 with reference to *trans*-nerolidol.

System suitability: reference solution (a):

- *resolution*: minimum 1.5 between the peaks due to limonene and 1,8-cineole.

Determine the percentage content of each of the following components. The limits are within the following ranges:

- *α-pinene*: 5.0 per cent to 15.0 per cent;
- *β-pinene*: 1.0 per cent to 4.0 per cent;
- *limonene*: 5.0 per cent to 10.0 per cent;
- *1,8-cineole*: 45.0 per cent to 65.0 per cent;
- *p-cymene*: 0.05 per cent to 4.0 per cent;
- *benzaldehyde*: 0.05 per cent to 0.5 per cent;
- *α-terpineol*: 3.0 per cent to 8.0 per cent;
- *trans-nerolidol*: 0.05 per cent to 1.5 per cent;
- *viridiflorol*: 2.5 per cent to 9.0 per cent;
- *disregard limit*: the area of the principal peak in the chromatogram obtained with reference solution (b) (0.05 per cent).

STORAGE

At a temperature not exceeding 25 °C.

01/2008:2383

NOTOGINSENG ROOT

Notoginseng radix

DEFINITION

Whole or fragmented taproot, without secondary roots, of *Panax pseudoginseng* Wall. var. *notoginseng* (Burk.) Hoo et Tseng [*Panax notoginseng* (Burk.) F.H. Chen ex C.Y. Wu et K.M. Feng] treated with steam and dried.

Content: minimum 3.8 per cent for the sum of ginsenosides Rg1 ($C_{42}H_{72}O_{14}$,$2H_2O$; M_r 837) and Rb1 ($C_{54}H_{92}O_{23}$,$3H_2O$; M_r 1163) (dried drug).

IDENTIFICATION

A. The primary root is conical, subconical or cylindrical, up to 6 cm long and 4 cm in diameter. The outer surface, showing shallow transverse striations and secondary root scars, is brownish-grey or yellowish-grey. The aerial stem scar is surrounded by warty protuberances at the crown. The texture of the root is compact. The fracture is smooth, shiny, brownish-grey and shows a yellowish-grey ring (cambial zone) and many radial striations.

B. Reduce to a powder (355) (*2.9.12*). The powder is light yellowish-grey. Examine under a microscope using *chloral hydrate solution R*. The powder shows the following diagnostic characters: abundant fragments of thin-walled parenchymatous cells; fragments of secretory canals containing yellowish-brown resin; rare lignified vessels about 30 µm in diameter, reticulate or pitted; rare cork fragments. Examine under a microscope using a 50 per cent *V/V* solution of *glycerol R*. The starch granules, often deformed, are very abundant, single or in groups of 2-3, and 1-10 µm in diameter.

C. Examine the chromatogram obtained in the test for *Panax ginseng* or *Panax quinquefolium*.

Results: see below the sequence of zones present in the chromatograms obtained with the reference solution and the test solution. Furthermore, other faint zones may be present in the chromatogram obtained with the test solution.

Top of the plate	
	A violet zone (at the solvent front)
	A violet zone
Arbutin: a brown zone	
	A violet zone (ginsenosides Rg1 + Rg2)
	2 violet zones
	2 faint violet zones
Aescin: a grey zone	A violet zone
	Several violet and greenish zones
Reference solution	**Test solution**

TESTS

Panax ginseng* or *Panax quinquefolium. Thin-layer chromatography (*2.2.27*).

Test solution. To 1.0 g of the powdered herbal drug (355) (*2.9.12*) add 10 mL of a 70 per cent *V/V* solution of *methanol R*

Herbal drugs

and boil under a reflux condenser for 15 min. Filter after cooling and dilute to 10.0 mL with *methanol R*.

Reference solution. Dissolve 5.0 mg of *aescin R* and 5.0 mg of *arbutin R* in 1 mL of *methanol R*.

Plate: *TLC silica gel plate R* (5-40 µm) [or *TLC silica gel plate R* (2-10 µm)].

Mobile phase: *ethyl acetate R*, *water R*, *butanol R* (25:50:100 *V/V/V*); allow to stand for 10 min and use the upper layer.

Application: 20 µL, as bands of 15 mm [or 4 µL of the test solution and 2 µL of the reference solution, as bands of 8 mm].

Development: in an unsaturated tank, over a path of 10 cm [or 5 cm].

Drying: in air for 30 min.

Detection: spray with *anisaldehyde solution R* and heat at 105-110 °C for 5-10 min; examine in daylight.

Results: in the chromatogram obtained with the test solution, the absence of a violet zone immediately above the zone due to arbutin in the chromatogram obtained with the reference solution suggests the presence of *Panax ginseng*; in the chromatogram obtained with the test solution, the presence of a brown zone immediately below the violet zone due to the ginsenosides Rg1 + Rg2 suggests the presence of *Panax quinquefolium*.

Loss on drying (*2.2.32*): maximum 12.0 per cent, determined on 1.000 g of the powdered herbal drug (355) (*2.9.12*) by drying in an oven at 105 °C for 2 h.

Total ash (*2.4.16*): maximum 6.0 per cent.

Ash insoluble in hydrochloric acid (*2.8.1*): maximum 1.0 per cent.

ASSAY

Liquid chromatography (*2.2.29*).

Test solution. Reduce about 50 g to a powder (355) (*2.9.12*). Place 0.250 g of the powdered herbal drug and 70 mL of a 50 per cent *V/V* solution of *methanol R* in a 250 mL round-bottomed flask. After adding a few grains of pumice, boil on a water-bath under a reflux condenser for 1 h. After cooling, centrifuge and collect the supernatant. Treat the residue as described above. Mix the collected liquids and evaporate to dryness under reduced pressure at a temperature not exceeding 60 °C. Take up the residue with 10.0 mL of a buffer solution, adjusted to pH 4.5, containing 3.5 g of *sodium dihydrogen phosphate R* and 7.2 g of *potassium dihydrogen phosphate R* in 1000 mL of *water R* (solution A). Wash a cartridge containing about 0.36 g of *octadecylsilyl silica gel for chromatography R* with 5 mL of *methanol R* followed by 20 mL of *water for chromatography R*. Apply 5.0 mL of solution A to the cartridge. Elute with 20 mL of *water for chromatography R*, followed by 15 mL of a 30 per cent *V/V* solution of *methanol R*. Discard the eluates after confirming that no ginsenosides are present, otherwise repeat the assay with another type of cartridge. Elute the cartridge with 20 mL of *methanol R* and evaporate the eluate to dryness. Take up the residue with 5.0 mL of *methanol R*.

Reference solution. Dissolve 3.0 mg of *ginsenoside Rb1 R*, 3.0 mg of *ginsenoside Rg1 R* and 3.0 mg of *ginsenoside Rf R* in *methanol R* and dilute to 5.0 mL with the same solvent.

Column:

- *size*: *l* = 0.10 m, Ø = 4.6 mm;
- *stationary phase*: *aminopropylsilyl silica gel for chromatography R* (3 µm).

Mobile phase:

- *mobile phase A*: *acetonitrile R*;
- *mobile phase B*: *water for chromatography R*;

Time (min)	Mobile phase A (per cent *V/V*)	Mobile phase B (per cent *V/V*)
0 - 14	90	10
14 - 18	90 → 80	10 → 20
18 - 55	80	20

Flow rate: 2 mL/min.

Detection: spectrophotometer at 203 nm.

Injection: 20 µL.

System suitability: reference solution:

- *resolution*: minimum 3.0 between the peaks due to ginsenosides Rf and Rg1.

Calculate the sum of the percentage contents of ginsenosides Rb1 and Rg1 using the following expression:

$$\frac{A_1 \times m_2 \times 2 \times p_1}{m_1 \times A_3} + \frac{A_2 \times m_3 \times 2 \times p_2}{m_1 \times A_4}$$

A_1 = area of the peak due to ginsenoside Rb1 in the chromatogram obtained with the test solution;

A_2 = area of the peak due to ginsenoside Rg1 in the chromatogram obtained with the test solution;

A_3 = area of the peak due to ginsenoside Rb1 in the chromatogram obtained with the reference solution;

A_4 = area of the peak due to ginsenoside Rg1 in the chromatogram obtained with the reference solution;

m_1 = mass of the dried drug to be examined, in grams;

m_2 = mass of *ginsenoside Rb1 R* in the reference solution, in grams;

m_3 = mass of *ginsenoside Rg1 R* in the reference solution, in grams;

p_1 = percentage content of ginsenoside Rb1 in *ginsenoside Rb1 R*;

p_2 = percentage content of ginsenoside Rg1 in *ginsenoside Rg1 R*.

01/2008:1552
corrected 7.0

NUTMEG OIL

Myristicae fragrantis aetheroleum

DEFINITION

Essential oil obtained by steam distillation of the dried and crushed kernels of *Myristica fragrans* Houtt.

CHARACTERS

Appearance: colourless or pale yellow liquid.

Spicy odour.

IDENTIFICATION

First identification: *B*.

Second identification: *A*.

A. Thin-layer chromatography (*2.2.27*).

Test solution. Dissolve 1 mL of the substance to be examined in *toluene R* and dilute to 10 mL with the same solvent.

Reference solution. Dissolve 20 µL of *myristicine R* in 10 mL of *toluene R*.

Plate: *TLC silica gel plate R*.

Mobile phase: *ethyl acetate R*, *toluene R* (5:95 *V/V*).

Application: 10 µL as bands.

Development: over a path of 15 cm.

Herbal drugs

Drying: in air.

Detection: spray with *vanillin reagent R*, heat at 100-105 °C for 10 min and examine in daylight.

Results: the chromatogram obtained with the reference solution shows in the upper third a pink or reddish-brown zone (myristicine); the chromatogram obtained with the test solution shows a series of zones of which 1 is similar in position and colour to the zone in the chromatogram obtained with the reference solution; above this zone a brownish zone (safrole) and a violet zone (hydrocarbons) are present; below the myristicine zone, 5 blue zones of variable intensity are present.

B. Examine the chromatograms obtained in the test for chromatographic profile.

Results: the principal peaks in the chromatogram obtained with the test solution are similar in retention time to those in the chromatogram obtained with the reference solution.

TESTS

Relative density (*2.2.5*): 0.885 to 0.905.

Refractive index (*2.2.6*): 1.475 to 1.485.

Optical rotation (*2.2.7*): + 8° to + 18°.

Chromatographic profile. Gas chromatography (*2.2.28*): use the normalisation procedure.

Test solution. The substance to be examined.

Reference solution. Dissolve 15 µL of *α-pinene R*, 15 µL of *β-pinene R*, 15 µL of *sabinene R*, 5 µL of *car-3-ene R*, 5 µL of *limonene R*, 5 µL of *γ-terpinene R*, 5 µL of *terpinen-4-ol R*, 5 µL of *safrole R* and 10 µL of *myristicine R* in 1 mL of *hexane R*.

Column:

- *material*: fused silica;
- *size*: *l* = 25-60 m, Ø = about 0.3 mm;
- *stationary phase*: bonded *macrogol 20 000 R*.

Carrier gas: *helium for chromatography R*.

Flow rate: 1.5 mL/min.

Split ratio: 1:100.

Temperature:

	Time (min)	Temperature (°C)
Column	0 - 10	50
	10 - 75	50 → 180
	75 - 130	180
Injection port		200 - 220
Detector		240 - 250

Detection: flame ionisation.

Injection: 0.2 µL.

Elution order: order indicated in the composition of the reference solution; record the retention times of these substances.

System suitability: reference solution:

- *resolution*: minimum 1.5 between the peaks due to β-pinene and sabinene.

Identification of components: using the retention times determined from the chromatogram obtained with the reference solution, locate the components of the reference solution in the chromatogram obtained with the test solution.

Determine the percentage content of each of these components. The percentages are within the following ranges:

- *α-pinene*: 15 per cent to 28 per cent;
- *β-pinene*: 13 per cent to 18 per cent;
- *sabinene*: 14 per cent to 29 per cent;
- *car-3-ene*: 0.5 per cent to 2.0 per cent;
- *limonene*: 2.0 per cent to 7.0 per cent;
- *γ-terpinene*: 2.0 per cent to 6.0 per cent;
- *terpinen-4-ol*: 2.0 per cent to 6.0 per cent;
- *safrole*: maximum 2.5 per cent;
- *myristicine*: 5.0 per cent to 12.0 per cent.

STORAGE

Protected from heat.

01/2008:1887
corrected 6.0

OAK BARK

Quercus cortex

DEFINITION

Cut and dried bark from the fresh young branches of *Quercus robur* L., *Q. petraea* (Matt.) Liebl. and *Q. pubescens* Willd.

Content: minimum 3.0 per cent of tannins, expressed as pyrogallol ($C_6H_6O_3$; M_r 126.1) (dried drug).

IDENTIFICATION

A. The bark occurs in channelled or quilled pieces, not more than 3 mm thick. The outer surface is light grey or greenish-grey, rather smooth, with occasional lenticels. The inner surface is dull brown or reddish-brown and has slightly raised longitudinal striations about 0.5-1 mm wide. The fracture is splintery and fibrous.

B. Reduce to a powder (355) (*2.9.12*). The powder is light brown or reddish-brown and fibrous. Examine under a microscope using *chloral hydrate solution R*. The powder shows the following diagnostic characters: groups of thick-walled fibres surrounded by a moderately thickened parenchymatous sheath containing prism crystals of calcium oxalate; fragments of cork composed of thin-walled tabular cells filled with brownish or reddish contents; abundant sclereids, isolated and in groups, some large with thick, stratified walls and branching pits, others smaller and thinner-walled with simple pits, often with dense brown contents; fragments of parenchyma containing cluster crystals of calcium oxalate; occasional fragments of sieve tissue, thin-walled, some showing sieve areas on the oblique end-walls.

C. To 1 g of the powdered herbal drug (710) (*2.9.12*) add 10 mL of *ethanol (30 per cent V/V) R* and heat the mixture under a reflux condenser on a water-bath for 30 min. Cool and filter. To 1 mL of this solution add 2 mL of a 10 g/L solution of *vanillin R* in *hydrochloric acid R*. A red colour develops.

TESTS

Loss on drying (*2.2.32*): maximum 10.0 per cent, determined on 1.000 g of the powdered herbal drug (710) (*2.9.12*) by drying in an oven at 105 °C for 2 h.

Total ash (*2.4.16*): maximum 8.0 per cent.

ASSAY

Tannins (*2.8.14*). Use 0.700 g of the powdered herbal drug (710) (*2.9.12*).

01/2009:1878

OLIVE LEAF

Oleae folium

DEFINITION

Dried leaf of *Olea europaea* L.

Content: minimum 5.0 per cent of oleuropein ($C_{25}H_{32}O_{13}$; M_r 540.5) (dried drug).

Herbal drugs

IDENTIFICATION

A. The leaf is simple, thick and coriaceous, lanceolate to obovate, 30-50 mm long and 10-15 mm wide, with a mucronate apex and tapering at the base to a short petiole; the margins are entire and reflexed abaxially. The upper surface is greyish-green, smooth and shiny, the lower surface paler and pubescent, particularly along the midrib and main lateral veins.

B. Reduce to a powder (355) (*2.9.12*). The powder is yellowish-green. Examine under a microscope using *chloral hydrate solution R*. The powder shows the following diagnostic characters: fragments of the epidermis in surface view with small, thick-walled polygonal cells and, in the lower epidermis only, small anomocytic stomata (*2.8.3*); fragments of the lamina in sectional view showing a thick cuticle, a palisade composed of 3 layers of cells and a small-celled spongy parenchyma; numerous sclereids, very thick-walled and mostly fibre-like with blunt or, occasionally, forked ends, isolated or associated with the parenchyma of the mesophyll; abundant, very large peltate trichomes, with a central unicellular stalk from which radiate some 10-30 thin-walled cells that become free from the adjoining cells at the margin of the shield, giving an uneven, jagged appearance.

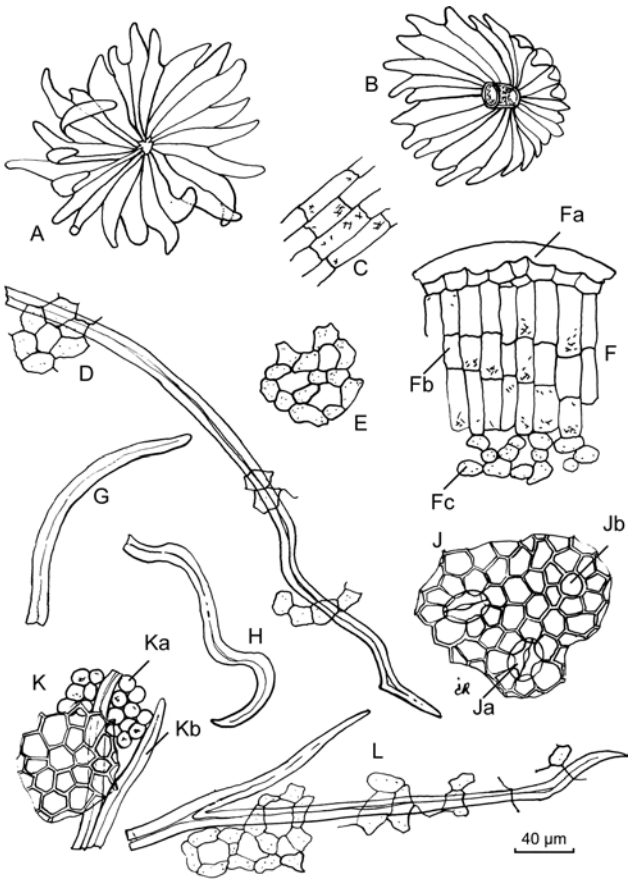

A. Peltate trichome, seen from above

B. Peltate trichome, seen from below

C. Palisade parenchyma

D, G, H and L. Fibre-like sclereids, some accompanied by parenchymatous fragments of the spongy mesophyll

E. Spongy parenchyma

F. Fragment of the lamina, in transverse section, showing a thick cuticle (Fa), palisade parenchyma composed of 3 layers of cells (Fb), and spongy parenchyma (Fc)

J. Fragment of lower epidermis with anomocytic stomata (Ja) and cicatrix of peltate trichome (Jb)

K. Fragment of upper epidermis, in surface view, with underlying palisade parenchyma (Ka) and sclereids of the spongy mesophyll (Kb)

Figure 1878.-1. – *Illustration of powdered herbal drug of olive leaf (see Identification B)*

C. Thin-layer chromatography (*2.2.27*).

Test solution. To 1.0 g of the powdered herbal drug (355) (*2.9.12*) add 10 mL of *methanol R*. Boil under a reflux condenser for 15 min. Cool and filter.

Reference solution. Dissolve 10 mg of *oleuropein R* and 1 mg of *rutin R* in 1 mL of *methanol R*.

Plate: *TLC silica gel plate R*.

Mobile phase: *water R*, *methanol R*, *methylene chloride R* (1.5:15:85 *V/V/V*).

Application: 10 µL, as bands.

Development: over a path of 10 cm.

Drying: in air.

Detection: spray with *vanillin reagent R* and heat at 100-105 °C for 5 min; examine in daylight.

Results: see below the sequence of zones present in the chromatograms obtained with the reference solution and the test solution. Furthermore, other faint zones may be present in the chromatogram obtained with the test solution.

Top of the plate	
	A dark violet-blue zone (solvent front)
	A dark violet-blue zone
Oleuropein: a brownish-green zone	A brownish-green zone (oleuropein)
Rutin: a brownish-yellow zone	
Reference solution	**Test solution**

TESTS

Loss on drying (*2.2.32*): maximum 10.0 per cent, determined on 1.000 g of the powdered herbal drug (355) (*2.9.12*) by drying in an oven at 105 °C for 2 h.

Total ash (*2.4.16*): maximum 9.0 per cent.

ASSAY

Liquid chromatography (*2.2.29*).

Test solution. In a flask, place 1.000 g of the powdered herbal drug (355) (*2.9.12*) and add 50 mL of *methanol R*. Heat in a water-bath at 60 °C for 30 min with shaking. Allow to cool and filter into a 100 mL volumetric flask. Rinse the flask and the filter with *methanol R* and dilute to 100.0 mL with the same solvent. Dilute 2.5 mL of this solution to 25.0 mL with *water R*.

Reference solution. Dissolve 5.0 mg of *oleuropein CRS* in 5.0 mL of *methanol R*. Dilute 1.0 mL of this solution to 25.0 mL with *water R*.

Column:

- *size*: *l* = 0.15 m, Ø = 3.9 mm;
- *stationary phase*: *octadecylsilyl silica gel for chromatography R* (5 µm);
- *temperature*: 25 °C.

Mobile phase:

- *mobile phase A*: dilute 1.0 mL of *glacial acetic acid R* to 100 mL with *water R*;
- *mobile phase B*: *methanol R*;

Time (min)	Mobile phase A (per cent *V/V*)	Mobile phase B (per cent *V/V*)
0 - 5	85 → 40	15 → 60
5 - 12	40 → 20	60 → 80
12 - 15	20 → 85	80 → 15

Flow rate: 1 mL/min.

Detection: spectrophotometer at 254 nm.

Injection: 20 µL.

Retention time: oleuropein = about 9 min.

Calculate the percentage content of oleuropein using the following expression:

$$\frac{A_1 \times m_2 \times p \times 8}{A_2 \times m_1}$$

A_1 = area of the peak due to oleuropein in the chromatogram obtained with the test solution;

A_2 = area of the peak due to oleuropein in the chromatogram obtained with the reference solution;

m_1 = mass of the herbal drug to be examined in the test solution, in grams;

m_2 = mass of *oleuropein CRS* in the reference solution, in grams;

p = percentage content of oleuropein in *oleuropein CRS*.

04/2009:2313

OLIVE LEAF DRY EXTRACT

Oleae folii extractum siccum

DEFINITION

Dry extract produced from *Olive leaf (1878)*.

Content: minimum 16.0 per cent of oleuropein ($C_{25}H_{32}O_{13}$; M_r 540.5) (dried extract).

PRODUCTION

The extract is produced from the herbal drug by a suitable procedure using ethanol (65-96 per cent *V/V*).

CHARACTERS

Appearance: greenish-brown or brown, amorphous powder.

IDENTIFICATION

Thin-layer chromatography (*2.2.27*).

Test solution. To 0.25 g of the extract to be examined add 10 mL of *methanol R*. Sonicate for 15 min and filter.

Reference solution. Dissolve 5 mg of *oleuropein R* and 1 mg of *rutin R* in 1 mL of *methanol R*.

Plate: *TLC silica gel plate R* (5-40 µm) [or *TLC silica gel plate R* (2-10 µm)].

Mobile phase: *water R*, *anhydrous formic acid R*, *ethyl acetate R* (7:13:80 *V/V/V*).

Application: 10 µL [or 2 µL] as bands of 10 mm [or 8 mm].

Development: over a path of 10 cm [or 6 cm].

Drying: in air.

Detection: spray with *anisaldehyde solution R* and heat at 100-105 °C for 5 min; examine in daylight.

Results: see below the sequence of zones present in the chromatograms obtained with the reference solution and the test solution. Furthermore, other faint zones may be present in the chromatogram obtained with the test solution.

Top of the plate	
	A dark violet-blue zone
Oleuropein: a brownish-green zone	A brownish-green zone (oleuropein)
Rutin: a yellow zone	
Reference solution	**Test solution**

TESTS

Loss on drying (*2.8.17*): maximum 8.0 per cent.

ASSAY

Liquid chromatography (*2.2.29*). *Prepare the solutions immediately before use.*

Test solution. To 0.250 g of the extract to be examined add 50 mL of *methanol R*. Sonicate for 15 min and filter into a 100 mL volumetric flask. Rinse the flask and the filter with 2 mL of *methanol R* and dilute to 100.0 mL with *water R*.

Reference solution (a). Dissolve 10.0 mg of *oleuropein CRS* in 10.0 mL of *methanol R* and dilute to 25.0 mL with *water R*.

Reference solution (b). Dissolve 4 mg of *rutin R* in 10 mL of reference solution (a).

Column:

- *size*: *l* = 0.15 m, Ø = 4.6 mm;
- *stationary phase*: *end-capped octadecylsilyl silica gel for chromatography R* (5 µm);
- *temperature*: 25 °C.

Mobile phase: *trifluoroacetic acid R*, *methanol R*, *water R* (1:400:600 *V/V/V*).

Flow rate: 1 mL/min.

Detection: spectrophotometer at 233 nm.

Injection: 20 µL.

Run time: twice the retention time of oleuropein.

Relative retention with reference to oleuropein (retention time = about 11 min): rutin = about 0.7.

System suitability: reference solution (b):

- *resolution*: minimum 3.0 between the peaks due to rutin and oleuropein.

Calculate the percentage content of oleuropein using the following expression:

$$\frac{A_1 \times m_2 \times p \times 4}{A_2 \times m_1}$$

A_1 = area of the peak due to oleuropein in the chromatogram obtained with the test solution;

A_2 = area of the peak due to oleuropein in the chromatogram obtained with reference solution (a);

m_1 = mass of the extract to be examined used to prepare the test solution, in grams;

m_2 = mass of *oleuropein CRS* used to prepare reference solution (a), in grams;

p = percentage content of oleuropein in *oleuropein CRS*.

01/2008:1839
corrected 6.0

OPIUM DRY EXTRACT, STANDARDISED

Opii extractum siccum normatum

DEFINITION

Standardised dry extract produced from *Raw opium (0777)*.

Content:

- *morphine* ($C_{17}H_{19}NO_3$; M_r 285.3): 19.6 per cent to 20.4 per cent (dried extract);
- *codeine* ($C_{18}H_{21}NO_3$; M_r 299.4): minimum 2.0 per cent (dried extract).

Content adjusted if necessary by adding a suitable excipient (e.g. lactose, dextrin).

PRODUCTION

It is produced from the drug and water by a suitable procedure.

Herbal drugs

CHARACTERS

Appearance: brown, amorphous powder.

IDENTIFICATION

A. Thin-layer chromatography (*2.2.27*).

Test solution. Triturate 0.05 g of the extract to be examined with 5 mL of *ethanol (70 per cent V/V) R*. Transfer to a 25 mL conical flask. Rinse with 3 mL of *ethanol (70 per cent V/V) R* and transfer to the same 25 mL conical flask. Heat in a water-bath at 50-60 °C, with stirring, for 30 min. Cool, filter, wash the filter with *ethanol (70 per cent V/V) R* and dilute the combined filtrate and washings to 10 mL with the same solvent.

Reference solution. Dissolve 5 mg of *morphine hydrochloride R* in the solution prepared as follows and dilute to 5 mL with the same solution: dissolve 2 mg of *papaverine hydrochloride R*, 12 mg of *codeine phosphate R* and 12 mg of *noscapine hydrochloride R* in *ethanol (70 per cent V/V) R* and dilute to 25 mL with the same solvent.

Plate: *TLC silica gel plate R* (5-40 µm) [or *TLC silica gel plate R* (2-10 µm)].

Mobile phase: *concentrated ammonia R*, *ethanol (96 per cent) R*, *acetone R*, *toluene R* (2:6:40:40 *V/V/V/V*). Use a freshly prepared mixture.

Application: 20 µL [or 6 µL] as bands.

Development: over a path of 15 cm [or 8 cm].

Drying: at 100-105 °C for 15 min.

Detection: allow to cool and spray with *potassium iodobismuthate solution R2* and then with a 4 g/L solution of *sulfuric acid R*; examine in daylight.

Results: see below the sequences of zones present in the chromatograms obtained with the reference solution and the test solution. A dark red zone (thebaine) situated between the zone due to codeine and the zone due to papaverine may be present in the chromatogram obtained with the test solution. Furthermore, other faint zones may be present in the chromatogram obtained with the test solution.

Top of the plate	
Noscapine: an orange-red or red zone	An orange-red or red zone (noscapine)
Papaverine: an orange-red or red zone	An orange-red or red zone (papaverine)
Codeine: an orange-red or red zone	An orange-red or red zone (codeine)
Morphine: an orange-red or red zone	An orange-red or red zone (morphine)
Reference solution	**Test solution**

B. To 0.5 g of the extract to be examined add 5 mL of *water R*, shake for 5 min and filter. To the filtrate add 0.25 mL of *ferric chloride solution R2*. A red colour develops, which does not disappear on the addition of 0.5 mL of *dilute hydrochloric acid R*.

TESTS

Thebaine. Liquid chromatography (*2.2.29*).

Test solution. Suspend 0.500 g of the extract to be examined in 50 mL of *ethanol (50 per cent V/V) R*, mix with the aid of ultrasound for 1 h, allow to cool and dilute to 100.0 mL with the same solvent. Allow to stand. To 10.0 mL of the supernatant, add 5 mL of *ammonium chloride buffer solution pH 9.5 R*, dilute to 25.0 mL with *water R* and mix. Transfer 20.0 mL of this solution to a chromatography column about 0.15 m long and about 30 mm in internal diameter containing 15 g of *kieselguhr for chromatography R*. Allow to stand for 15 min. Elute with 2 quantities, each of 40 mL, of a mixture of 15 volumes of *2-propanol R* and 85 volumes of *methylene chloride R*. Evaporate the eluate to dryness *in vacuo* at 40 °C. Transfer the residue to a volumetric flask with the aid of the mobile phase and dilute to 25.0 mL with the mobile phase.

Reference solution (a). Dissolve 5.0 mg of *thebaine CRS* in the mobile phase and dilute to 50.0 mL with the mobile phase.

Reference solution (b). Dissolve 12.0 mg of *morphine hydrochloride CRS* in the mobile phase and dilute to 15.0 mL with the mobile phase (solution A). Dissolve 10.0 mg of *codeine CRS* in the mobile phase and dilute to 50.0 mL with the mobile phase. To 10.0 mL of this solution add 10.0 mL of solution A and mix.

Precolumn:

- *size*: *l* = 4 mm, Ø = 4.0 mm;
- *stationary phase*: *octylsilyl silica gel for chromatography R* (5 µm).

Column:

- *size*: *l* = 0.25 m, Ø = 4.0 mm;
- *stationary phase*: *octylsilyl silica gel for chromatography R* (5 µm).

Mobile phase: dissolve 1.0 g of *sodium heptanesulfonate monohydrate R* in 420 mL of *water R*, adjust to pH 3.2 with a 4.9 g/L solution of *phosphoric acid R* and add 180 mL of *acetonitrile R*.

Flow rate: 1.5 mL/min.

Detection: spectrophotometer at 280 nm.

Injection: 20 µL.

System suitability:

- *resolution*: minimum 2.5 between the peaks due to morphine and codeine in the chromatogram obtained with reference solution (b);
- *mass distribution ratio*: minimum 3.0 for the peak due to thebaine in the chromatogram obtained with reference solution (a).

Calculate the percentage content of thebaine using the following expression:

$$\frac{A_1 \times m_2 \times F \times p}{A_2 \times m_1}$$

A_1 = area of the peak due to the relevant alkaloid in the chromatogram obtained with the test solution;

A_2 = area of the peak due to the relevant alkaloid in the chromatogram obtained with the reference solution;

m_1 = mass of the extract to be examined in the test solution, in grams;

m_2 = mass of the relevant alkaloid in the reference solution, in grams;

p = percentage content of the alkaloid in the relevant alkaloid CRS;

F = 6.250 for the determination of thebaine.

Limit:

- *thebaine*: maximum 6.0 per cent (dried extract).

Loss on drying (*2.2.32*): maximum 5.0 per cent, determined on 1.000 g by drying in an oven at 105 °C for 4 h.

Herbal drugs

ASSAY

Liquid chromatography (*2.2.29*) as described in the test for thebaine with the following modifications.

Injection: test solution and reference solution (b).

System suitability:

– *repeatability*: maximum relative standard deviation of 1.0 per cent for the area of the peak due to morphine after 6 injections of reference solution (b).

Calculate the percentage content of morphine and codeine from the expression given in the test for thebaine, assigning *F* as 10.417 for morphine and as 3.125 for codeine.

01/2008:1840
corrected 6.0

OPIUM, PREPARED

Opii pulvis normatus

DEFINITION

Raw opium powdered (180) (*2.9.12*), and dried at a temperature not exceeding 70 °C.

Content:

– *morphine* ($C_{17}H_{19}NO_3$; M_r 285.3): 9.8 per cent to 10.2 per cent (drug dried at 100-105 °C for 4 h),

– *codeine* ($C_{18}H_{21}NO_3$; M_r 299.4): minimum 1.0 per cent (drug dried at 100-105 °C for 4 h).

Content adjusted if necessary by adding a suitable excipient or raw opium powder.

CHARACTERS

Appearance: yellowish-brown or dark brown powder.

IDENTIFICATION

A. Examine under a microscope using a 20 g/L solution of *potassium hydroxide R*. It is seen to consist of granules of latex agglomerated in irregular masses, and of light brown elongated filaments. Some fragments of vessels and rather elongated, refringent crystals are also visible, as well as a smaller number of round pollen grains and fragments of elongated fibres. Hairs of various lengths with sharp points and fragments of epicarp consisting of polygonal cells with thick walls defining a stellate lumen may be present. Examine under a microscope using *glycerol (85 per cent) R*. Particles of excipient and a few grains of starch introduced during the handling of the latex may be seen.

B. Thin-layer chromatography (*2.2.27*).

Test solution. Triturate 0.10 g of the drug to be examined with 5 mL of *ethanol (70 per cent V/V) R*, rinse with 3 mL of *ethanol (70 per cent V/V) R*, transfer to a 25 mL conical flask. Heat in a water-bath at 50-60 °C with stirring for 30 min. Cool, filter, wash the filter with *ethanol (70 per cent V/V) R* and dilute the filtrate to 10 mL with the same solvent.

Reference solution. Dissolve 2.0 mg of *papaverine hydrochloride R*, 12.0 mg of *codeine phosphate R*, 12.0 mg of *noscapine hydrochloride R* and 25.0 mg of *morphine hydrochloride R* in *ethanol (70 per cent V/V) R* and dilute to 25.0 mL with the same solvent.

Plate: *TLC silica gel G plate R*.

Mobile phase: *concentrated ammonia R*, *ethanol (96 per cent) R*, *acetone R*, *toluene R* (2:6:40:40 *V/V/V/V*). Use a freshly prepared mixture.

Application: 20 µL, as bands of 20 mm by 3 mm.

Development: over a path of 15 cm.

Drying: at 100-105 °C for 15 min.

Detection: allow to cool and spray with *potassium iodobismuthate solution R2* and then with a 4 g/L solution of *sulfuric acid R*, examine in daylight.

Results: see below the sequence of the zones present in the chromatograms obtained with the reference solution and the test solution. Furthermore, a dark red zone (thebaine) situated between the codeine zone and the papaverine zone may be present in the chromatogram obtained with the test solution.

Top of the plate	
Noscapine: an orange-red or red zone	An orange-red or red zone (noscapine)
Papaverine: an orange-red or red zone	An orange-red or red zone (papaverine)
Codeine: an orange-red or red zone	An orange-red or red zone (codeine)
Morphine: an orange-red or red zone	An orange-red or red zone (morphine)
Reference solution	**Test solution**

C. To 1.0 g of the drug to be examined add 5 mL of *water R*, shake for 5 min and filter. To the filtrate add 0.25 mL of *ferric chloride solution R2*. A red colour develops which does not disappear on the addition of 0.5 mL of *dilute hydrochloric acid R*.

TESTS

Thebaine. Liquid chromatography (*2.2.29*).

Test solution. Suspend 1.00 g of the drug to be examined in 50 mL of *ethanol (50 per cent V/V) R*, mix using sonication for 1 h, allow to cool and dilute to 100.0 mL with the same solvent. Allow to stand. To 10.0 mL of the supernatant, add 5 mL of *ammonium chloride buffer solution pH 9.5 R*, dilute to 25.0 mL with *water R* and mix. Transfer 20.0 mL of the solution to a chromatography column about 0.15 m long and about 30 mm in internal diameter containing 15 g of *kieselguhr for chromatography R*. Allow to stand for 15 min. Elute with 2 quantities, each of 40 mL, of a mixture of 15 volumes of *2-propanol R* and 85 volumes of *methylene chloride R*. Evaporate the eluate to dryness *in vacuo* at 40 °C. Transfer the residue to a volumetric flask with the aid of the mobile phase and dilute to 25.0 mL with the mobile phase.

Reference solution. Dissolve 25.0 mg of *thebaine R* in the mobile phase and dilute to 25.0 mL with the mobile phase. Dilute 10.0 mL of the solution to 100.0 mL with the mobile phase.

Precolumn:

– *size*: *l* = 4 mm, Ø = 4.0 mm,

– *stationary phase*: *octylsilyl silica gel for chromatography R* (5 µm).

Column:

– *size*: *l* = 0.25 m, Ø = 4.0 mm,

– *stationary phase*: *octylsilyl silica gel for chromatography R* (5 µm).

Mobile phase: dissolve 1.0 g of *sodium heptanesulfonate monohydrate R* in 420 mL of *water R*, adjust to pH 3.2 with phosphoric acid (4.9 g/L H_3PO_4) (about 5 mL) and add 180 mL of *acetonitrile R*.

Flow rate: 1.5 mL/min.

Detection: spectrophotometer at 280 nm.

Injection: a suitable volume with a loop injector.

System suitability: reference solution:

– *mass distribution ratio*: minimum 3.0 for the peak due to thebaine.

Herbal drugs

Calculate the percentage content of alkaloid from the expression:

$$\frac{m_1 \times A_2 \times 125}{m_2 \times A_1} \times \frac{100}{100 - h}$$

m_1 = mass of the alkaloid in the reference solution, in grams,

m_2 = mass of the substance to be examined in the test solution, in grams,

A_1 = area of the peak due to the alkaloid in the chromatogram obtained with the reference solution,

A_2 = area of the peak due to the alkaloid in the chromatogram obtained with the test solution,

h = percentage loss on drying.

Limit:

– *thebaine*: maximum 3.0 per cent (dried drug).

Loss on drying (*2.2.32*): maximum 8.0 per cent, determined on 1.000 g by drying in an oven at 105 °C for 4 h.

Total ash (*2.4.16*): maximum 6.0 per cent.

ASSAY

Liquid chromatography (*2.2.29*) as described in the test for thebaine with the following modifications.

Reference solution. Dissolve 0.100 g of *morphine hydrochloride R* and 25.0 mg of *codeine R* in the mobile phase and dilute to 25.0 mL with the mobile phase. Dilute 10.0 mL of the solution to 100.0 mL with the mobile phase.

System suitability: reference solution:

– *resolution*: minimum 2.5 between the peaks due to morphine and codeine; if necessary, adjust the volume of acetonitrile in the mobile phase,

– *repeatability*: maximum relative standard deviation of 1.0 per cent for the peak area due to morphine, determined on 6 replicate injections.

Calculate the percentage content of morphine and codeine from the expression given in the test for thebaine. For the calculation, 1 mg of *morphine hydrochloride R* is taken to be equivalent to 0.759 mg of morphine and 1 mg of *codeine R* is taken to be equivalent to 0.943 mg of codeine.

01/2008:0777
corrected 6.0

OPIUM, RAW

Opium crudum

DEFINITION

Raw opium is intended only as starting material for the manufacture of galenical preparations. It is not dispensed as such.

Air-dried latex obtained by incision from the unripe capsules of *Papaver somniferum* L.

Content:

– *morphine* ($C_{17}H_{19}NO_3$; M_r 285.3): minimum 10.0 per cent (dried drug);

– *codeine* ($C_{18}H_{21}NO_3$; M_r 299.4): minimum 2.0 per cent (dried drug).

CHARACTERS

Characteristic odour.

Appearance: blackish-brown masses of various sizes, which tend to be soft and shiny and, after drying, become hard and brittle.

IDENTIFICATION

Strip off any covering, cut the substance to be examined into thin slices, dry at about 60 °C for 48 h, if necessary, and reduce to a powder (500) (2.9.12).

A. Examined under a microscope, a suspension of raw opium in a 20 g/L solution of *potassium hydroxide R* shows the following diagnostic characters: granules of latex agglomerated in irregular masses, and light-brown elongated filaments. Some fragments of vessels and rather elongated, refringent crystals are also visible, as well as a smaller number of round pollen grains and fragments of elongated fibres. Hairs of various lengths with sharp points and a few grains of starch introduced during the handling of the latex may be present. Fragments of epicarp consisting of polygonal cells with thick walls defining a stellate lumen may also be present.

B. Thin-layer chromatography (*2.2.27*).

Test solution. Triturate 0.10 g of the powdered herbal drug with 5 mL of *ethanol (70 per cent V/V) R*, add 3 mL of *ethanol (70 per cent V/V) R*, transfer to a 25 mL conical flask and heat in a water-bath at 50-60 °C with stirring for 30 min. Cool, filter, wash the filter with *ethanol (70 per cent V/V) R* and dilute the filtrate to 10 mL with the same solvent.

Reference solution. Dissolve 2.0 mg of *papaverine hydrochloride R*, 12.0 mg of *codeine phosphate R*, 12.0 mg of *noscapine hydrochloride R* and 25.0 mg of *morphine hydrochloride R* in *ethanol (70 per cent V/V) R* and dilute to 25.0 mL with the same solvent.

Plate: *TLC silica gel G plate R.*

Mobile phase: *concentrated ammonia R*, *ethanol (96 per cent) R*, *acetone R*, *toluene R* (2:6:40:40 *V/V/V/V*); use a freshly prepared mixture.

Application: 20 µL, as bands of 20 mm by 3 mm.

Development: over a path of 15 cm.

Drying: at 100-105 °C for 15 min, then allow to cool.

Detection: spray with *potassium iodobismuthate solution R2* and then with a 4 g/L solution of *sulfuric acid R*.

Results: the chromatogram obtained with the reference solution shows in the lower part an orange-red or red zone (morphine) with a similarly coloured zone (codeine) above it, and in the upper part an orange-red or red zone (papaverine) with a similarly coloured zone (noscapine) above that; the chromatogram obtained with the test solution shows orange-red or red zones corresponding to those in the chromatogram obtained with the reference solution, and may also show a dark red zone (thebaine) situated between those due to codeine and papaverine.

C. To 1.0 g of the powdered herbal drug add 5 mL of *water R*, shake for 5 min and filter. To the filtrate add 0.25 mL of *ferric chloride solution R2.* A red colour develops that does not disappear upon the addition of 0.5 mL of *dilute hydrochloric acid R*.

TESTS

Thebaine. Liquid chromatography (*2.2.29*).

Test solution. Suspend 1.00 g of the substance to be examined, cut into thin slices, in 50 mL of *ethanol (50 per cent V/V) R*, mix with the aid of ultrasound for 1 h, allow to cool and dilute to 100.0 mL with the same solvent. Allow to stand. To 10.0 mL of the supernatant add 5 mL of *ammonium chloride buffer solution pH 9.5 R*, dilute to 25.0 mL with *water R* and mix. Transfer 20.0 mL of this solution to a chromatography column about 0.15 m long and about 30 mm in internal diameter containing 15 g of *kieselguhr for chromatography R*. Allow to stand for 15 min. Elute with 2 quantities, each of 40 mL, of a mixture of 15 volumes of *2-propanol R* and 85 volumes of *methylene chloride R*. Evaporate the eluate to dryness *in vacuo* at 40 °C. Transfer the residue to a volumetric flask with the aid

Herbal drugs

of the mobile phase and dilute to 25.0 mL with the mobile phase.

Reference solution. Dissolve 25.0 mg of *thebaine R* in the mobile phase and dilute to 25.0 mL with the mobile phase. Dilute 10.0 mL of this solution to 100.0 mL with the mobile phase.

Precolumn:

- *size*: *l* = 4 mm, Ø = 4.0 mm;
- *stationary phase*: *octylsilyl silica gel for chromatography R* (5 µm).

Column:

- *size*: *l* = 0.25 m, Ø = 4.0 mm;
- *stationary phase*: *octylsilyl silica gel for chromatography R* (5 µm).

Mobile phase: dissolve 1.0 g of *sodium heptanesulfonate monohydrate R* in 420 mL of *water R*, adjust to pH 3.2 with phosphoric acid (4.9 g/L H_3PO_4) (about 5 mL) and add 180 mL of *acetonitrile R*.

Flow rate: 1.5 mL/min.

Detection: spectrophotometer at 280 nm.

Injection: a suitable volume with a loop injector.

System suitability: reference solution:

- *number of theoretical plates*: minimum 3000;
- *mass distribution ratio*: minimum 3.0 for the peak due to thebaine.

Calculate the percentage content of the alkaloid using the following expression:

$$\frac{m_1 \times A_2 \times 625}{m_2 \times A_1 \times 5} \times \frac{100}{100 - h}$$

m_1 = mass of the alkaloid used to prepare the reference solution, in grams;

m_2 = mass of the substance to be examined used to prepare the test solution, in grams;

A_1 = area of the peak due to the alkaloid in the chromatogram obtained with the reference solution;

A_2 = area of the peak due to the alkaloid in the chromatogram obtained with the test solution;

h = percentage loss on drying.

Limit:

- *thebaine*: maximum 3.0 per cent (dried drug).

Loss on drying (*2.2.32*): maximum 15.0 per cent, determined on 1.000 g of the substance to be examined cut into thin slices, by drying in an oven at 105 °C for 4 h.

Total ash (*2.4.16*): maximum 6.0 per cent.

ASSAY

Liquid chromatography (*2.2.29*) as described in the test for thebaine with the following modifications.

Reference solution. Dissolve 0.100 g of *morphine hydrochloride R* and 25.0 mg of *codeine R* in the mobile phase and dilute to 25.0 mL with the mobile phase. Dilute 10.0 mL of this solution to 100.0 mL with the mobile phase.

System suitability: reference solution:

- *resolution*: minimum 2.5 between the peaks due to morphine and codeine; if necessary, adjust the volume of acetonitrile in the mobile phase;
- *repeatability*: maximum relative standard deviation of 1.0 per cent for the area of the peak due to morphine after 6 injections.

Calculate the percentage content of morphine and codeine from the expression given in the test for thebaine.

For the calculation, 1 mg of *morphine hydrochloride R* is equivalent to 0.759 mg of morphine, and 1 mg of *codeine R* is equivalent to 0.943 mg of codeine.

01/2008:1841
corrected 6.0

OPIUM TINCTURE, STANDARDISED

Opii tinctura normata

DEFINITION

Standardised tincture produced from *Raw opium (0777)*.

Content:

- *morphine* ($C_{17}H_{19}NO_3$; M_r 285.3): 0.95 per cent to 1.05 per cent;
- *codeine* ($C_{18}H_{21}NO_3$; M_r 299.4): minimum 0.1 per cent.

PRODUCTION

It is produced from the drug and equal volumes of ethanol (70 per cent *V/V*) and water by an appropriate procedure.

CHARACTERS

Appearance: reddish-brown liquid.

IDENTIFICATION

Thin-layer chromatography (*2.2.27*).

Test solution. Dilute 1.0 mL of the tincture to be examined to 10 mL with *ethanol (70 per cent V/V) R*.

Reference solution. Dissolve 5 mg of *morphine hydrochloride R* in the solution prepared as follows and dilute to 5 mL with the same solution: dissolve 2 mg of *papaverine hydrochloride R*, 12 mg of *codeine phosphate R* and 12 mg of *noscapine hydrochloride R* in *ethanol (70 per cent V/V) R* and dilute to 25 mL with the same solvent.

Plate: *TLC silica gel plate R* (5-40 µm) [or *TLC silica gel plate R* (2-10 µm)].

Mobile phase: *concentrated ammonia R*, *ethanol (96 per cent) R*, *acetone R*, *toluene R* (2:6:40:40 *V/V/V/V*). Use a freshly prepared mixture.

Application: 20 µL [or 6 µL] as bands.

Development: over a path of 15 cm [or 8 cm].

Drying: at 100-105 °C for 15 min.

Detection: allow to cool and spray the plate with *potassium iodobismuthate solution R2* and then with a 4 g/L solution of *sulfuric acid R*; examine in daylight.

Results: see below the sequence of zones present in the chromatograms obtained with the reference solution and the test solution. A dark red zone (thebaine) situated between the zone due to codeine and the zone due to papaverine may be present in the chromatogram obtained with the test solution. Furthermore, other faint zones may be present in the chromatogram obtained with the test solution.

Top of the plate	
Noscapine: an orange-red or red zone	An orange-red or red zone (noscapine)
Papaverine: an orange-red or red zone	An orange-red or red zone (papaverine)
Codeine: an orange-red or red zone	An orange-red or red zone (codeine)
Morphine: an orange-red or red zone	An orange-red or red zone (morphine)
Reference solution	**Test solution**

TESTS

Ethanol (*2.9.10*): 31 per cent *V/V* to 34 per cent *V/V*.

Herbal drugs

Thebaine. Liquid chromatography (*2.2.29*).

Test solution. Dilute 2.000 g of the tincture to be examined to 25.0 mL with *ethanol (50 per cent V/V) R*. To 10.0 mL of the solution add 5 mL of *ammonium chloride buffer solution pH 9.5 R*, dilute to 25.0 mL with *water R* and mix. Transfer 20.0 mL of this solution to a chromatography column about 0.15 m long and about 30 mm in internal diameter containing 15 g of *kieselguhr for chromatography R*. Allow to stand for 15 min. Elute with 2 quantities, each of 40 mL, of a mixture of 15 volumes of *2-propanol R* and 85 volumes of *methylene chloride R*. Evaporate the eluate to dryness *in vacuo* at 40 °C. Transfer the residue to a volumetric flask with the aid of the mobile phase and dilute to 25.0 mL with the mobile phase.

Reference solution (a). Dissolve 5.0 mg of *thebaine CRS* in the mobile phase and dilute to 50.0 mL with the mobile phase.

Reference solution (b). Dissolve 12.0 mg of *morphine hydrochloride CRS* in the mobile phase and dilute to 15.0 mL with the mobile phase (solution A). Dissolve 10.0 mg of *codeine CRS* in the mobile phase and dilute to 50.0 mL with the mobile phase. To 10.0 mL of this solution add 10.0 mL of solution A and mix.

Precolumn:

- *size*: *l* = 4 mm, Ø = 4.0 mm;
- *stationary phase*: *octylsilyl silica gel for chromatography R* (5 µm).

Column:

- *size*: *l* = 0.25 m, Ø = 4.0 mm;
- *stationary phase*: *octylsilyl silica gel for chromatography R* (5 µm).

Mobile phase: dissolve 1.0 g of *sodium heptanesulfonate monohydrate R* in 420 mL of *water R*, adjust to pH 3.2 with a 4.9 g/L solution of *phosphoric acid R* and add 180 mL of *acetonitrile R*.

Flow rate: 1.5 mL/min.

Detection: spectrophotometer at 280 nm.

Injection: 20 µL.

System suitability: reference solution (b):

- *resolution*: minimum 2.5 between the peaks due to morphine and codeine.

Calculate the percentage content of thebaine using the following expression:

$$\frac{A_1 \times m_2 \times F \times p}{A_2 \times m_1}$$

A_1 = area of the peak due to the relevant alkaloid in the chromatogram obtained with the test solution;

A_2 = area of the peak due to the relevant alkaloid in the chromatogram obtained with the reference solution;

m_1 = mass of the tincture to be examined in the test solution, in grams;

m_2 = mass of the relevant alkaloid in the reference solution, in grams;

p = percentage content of the alkaloid in the relevant alkaloid CRS;

F = 1.563 for the determination of thebaine.

Limit:

- *thebaine*: maximum 0.3 per cent.

Dry residue (*2.8.16*): minimum 4.0 per cent *m/m*, determined on 3.00 g.

ASSAY

Liquid chromatography (*2.2.29*) as described in the test for thebaine with the following modifications.

Injection: test solution and reference solution (b).

System suitability:

- *repeatability*: maximum relative standard deviation of 1.0 per cent for the area of the peak due to morphine after 6 injections of reference solution (b).

Calculate the percentage content of morphine and codeine from the expression given in the test for thebaine, assigning *F* as 2.604 for morphine and 0.781 for codeine.

01/2011:1880

OREGANO

Origani herba

DEFINITION

Dried leaves and flowers separated from the stems of *Origanum onites* L. or *Origanum vulgare* L. subsp. *hirtum* (Link) Ietsw., or a mixture of both species.

Content:

- *essential oil*: minimum 25 mL/kg (anhydrous drug);
- *sum of the contents of carvacrol and thymol* (both $C_{10}H_{14}O$; M_r 150.2): minimum 60 per cent in the essential oil.

IDENTIFICATION

A. *O. onites*. The leaf is yellowish-green, usually 4-22 mm long and 3-14 mm wide. It has a long or short petiole or is sessile. The lamina is ovate, elliptic or ovate-lanceolate. Margins are entire or serrate, the apex is acute or obtuse. The veins are yellowish and conspicuous on the adaxial surface. Flowers are solitary or seen as broken parts of the corymb. The calyx is bract-like and inconspicuous. The corolla is white, on top of inflorescences or single flowers, or inconspicuous. The bracts are imbricate and green like the leaves. The drug contains yellowish or yellowish-brown stem parts.

O. vulgare (subsp. *hirtum*). The leaf is green and usually 3-28 mm long and 2.5-19 mm wide. It is petiolate or sessile. The lamina is ovate or ovate-eliptic. The margins are entire or serrate, the apex is acute or obtuse. Flowers are rare, found as broken parts of the corymbs. Bracts are greenish-yellow and imbricate. The calyx is corolla-like and inconspicuous. The corolla is white, on top of inflorescences, slightly conspicuous or inconspicuous.

B. Reduce to a powder (710) (*2.9.12*). The powder is green (*O. vulgare*) or yellowish-green (*O. onites*). Examine under a microscope using *chloral hydrate solution R* (Figure 1880.-1).

O. onites powder shows fragments of leaf epidermis [A, D, G] composed of cells with sinuous walls, diacytic stomata (*2.8.3*) [Ga], covering trichomes and glandular trichomes; there are 2 types of glandular trichomes: some of lamiaceous type with 8-16 cells, in surface view [Da], and a very common type with a unicellular head and uni- [Gc], bi- [H] or tricellular stalk; the covering trichomes have smooth, thick walls; some are multicellular [B, Gb], often broken [Aa], and contain prisms of calcium oxalate, while others, which are rare, are unicellular and conical [C]; scars from covering and glandular trichomes are visible on the epidermises [Gd, Ge]; pollen grains, with smooth exine, are frequent [E, F].

O. vulgare subsp. *hirtum* powder shows fragments of the upper epidermis with cells with sinuous, beaded walls, accompanied by palisade parenchyma [J]; fragments of the lower epidermis [N] composed of cells with finely and irregularly thickened walls, diacytic stomata (*2.8.3*) [Na], covering trichomes and glandular trichomes; there are

Herbal drugs

2 types of glandular trichomes: some of lamiaceous type with 12 cells, in surface view [Nb], and a rare type with a unicellular head [Nc] and bi- or tricellular stalk; the covering trichomes have thick, warty walls and contain fine needles of calcium oxalate; some are conical, multicellular and serrate [L, M], while others, which are rare, are unicellular [K]; there are occasional pollen grains, with smooth exine [E, F].

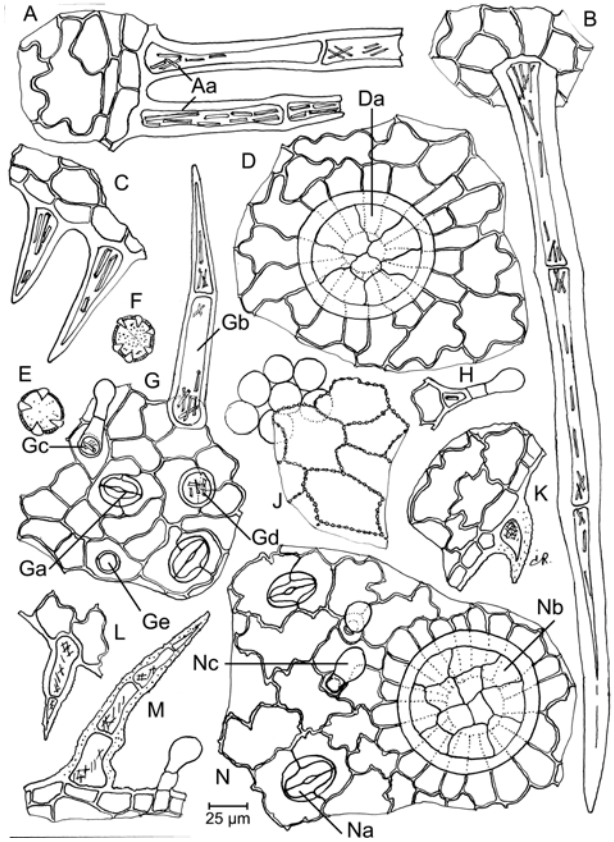

Figure 1880.-1. – *Illustration for identification test B of powdered herbal drug of oregano*

C. Thin-layer chromatography (*2.2.27*).

Test solution. To 1.0 g of the powdered herbal drug (355) (*2.9.12*) add 5 mL of *methylene chloride R* and shake for 3 min, then filter through about 2 g of *anhydrous sodium sulfate R*.

Reference solution. Dissolve 1 mg of *thymol R* and 10 µL of *carvacrol R* in 10 mL of *methylene chloride R*.

Plate: *TLC silica gel plate R*.

Mobile phase: *methylene chloride R*.

Application: 20 µL as bands.

Development: over a path of 15 cm.

Drying: in air.

Detection: spray with *anisaldehyde solution R* using 10 mL for a plate 200 mm square and heat at 100-105 °C for 10 min.

Results: see below the sequence of zones present in the chromatograms obtained with the reference solution and the test solution. Furthermore, other zones are present in the lower third and upper part of the chromatogram obtained with the test solution.

Top of the plate	
	A bluish-purple zone
———	———
	A pale green zone
Thymol: a pink zone	A pink zone (thymol)
Carvacrol: a pale violet zone	A pale violet zone (carvacrol)
———	———
	A pale purple zone
	A grey zone
	A pale green zone
	A bluish-purple zone
	An intense brown zone
Reference solution	**Test solution**

TESTS

Water (*2.2.13*): maximum 120 mL/kg, determined on 20.0 g of the powdered herbal drug (355) (*2.9.12*).

Total ash (*2.4.16*): maximum 15.0 per cent.

Ash insoluble in hydrochloric acid (*2.8.1*): maximum 4.0 per cent.

ASSAY

Essential oil (*2.8.12*). Use 30.0 g of the drug to be examined, a 1000 mL round-bottomed flask and 400 mL of *water R* as the distillation liquid. Distil at a rate of 2-3 mL/min for 2 h without *xylene R* in the graduated tube.

Carvacrol and thymol. Gas chromatography (*2.2.28*): use the normalisation procedure.

Test solution. Filter the essential oil obtained in the assay of essential oil over a small amount of *anhydrous sodium sulfate R* and dilute to 5.0 mL with *heptane R* by rinsing the apparatus and the anhydrous sodium sulfate.

Reference solution. Dissolve 0.20 g of *thymol R* and 50 mg of *carvacrol R* in *heptane R* and dilute to 5.0 mL with the same solvent.

Column:

- *material*: fused silica;
- *size*: *l* = 60 m, Ø = 0.25 mm;
- *stationary phase*: *macrogol 20 000 R* (film thickness 0.25 µm).

Carrier gas: *nitrogen for chromatography R* or *helium for chromatography R*.

Flow rate: 1.5 mL/min.

Split ratio: 1:100.

Temperature:

	Time (min)	Temperature (°C)
Column	0 - 45	40 → 250
Injection port		190
Detector		210

Detection: flame ionisation.

Injection: 0.2 µL.

Elution order: order indicated in the composition of the reference solution; record the retention times of these substances.

System suitability: reference solution:

- *resolution*: minimum 1.5 between the peaks due to thymol and carvacrol.

Herbal drugs

Using the retention times determined from the chromatogram obtained with the reference solution, locate the components of the reference solution in the chromatogram obtained with the test solution.

Determine the percentage content of the sum of carvacrol and thymol.

01/2013:2450
corrected 7.8

ORIENTVINE STEM

Sinomenii caulis

DEFINITION

Dried, whole or fragmented stem of *Sinomenium acutum* (Thunb.) Rehder et E.H.Wilson, collected in late autumn and early winter.

Content: minimum 0.5 per cent of sinomenine ($C_{19}H_{23}NO_4$; M_r 329.4) (dried drug).

IDENTIFICATION

A. *Whole drug.* Long cylindrical stem, somewhat curved, 60 cm long or more, 0.5-2 cm in diameter. The outer bark is greenish-brown or brown, sometimes greyish-brown, with relatively wide longitudinal striations and prominent verrucose lenticels; the nodes are slightly swollen and branched. The texture is light, hard and difficult to break; the fracture is uneven, greyish-yellow or pale greyish-brown; the bark is thin (about 1/10 of the diameter); the medullary rays are very conspicuous; the pith is yellowish-white or pale yellowish-brown.

Fragmented drug. Fragments of stems, in discs, about 1.5 cm in diameter and 0.3 cm thick, with greenish-brown, brown or greyish-brown outer surface; a transverse section shows a narrow, pale yellow cortical zone, it is mainly occupied by the vascular system (about 3/4 of the section) consisting of very numerous vascular bundles (about 15-20) in a circle around the yellowish-white or pale yellowish-brown, small, circular pith; each bundle is delimited on the outside by a narrow and continuous, wavy, light brown zone and is separated from the next bundle by a narrow, light brown medullary ray; the xylem vessels with a relatively wide interior lumen are clearly visible.

B. Microscopic examination (*2.8.23*). The powder is yellowish-brown or greyish-brown. Examine under a microscope using *chloral hydrate solution R*. The powder shows the following diagnostic characters: rare fragments of epidermis with polyhedral cells, in surface view, covered with a thick, pale yellow cuticle about 50 µm in diameter; sclereids isolated or in groups, of various sizes and shapes (subsquare, fusiform, elliptical or irregular), with thickened, pitted walls with conspicuous pit canals, free or included in fragments of parenchyma; pale yellow or yellow fibres, 30-70 µm in diameter with thick, distinctly channelled walls and a very narrow lumen; fragments of parenchyma with thin-walled cells containing fine, needle-shaped crystals of calcium oxalate; fragments of xylem consisting of reticulate or pitted vessels, up to 200 µm in diameter, accompanied by ligneous parenchyma with slightly and regularly thickened and pitted cells. Examine under a microscope using a 50 per cent *V/V* solution of *glycerol R*. The powder shows simple, spherical starch granules about 10 µm in diameter, free or contained in parenchymatous cells.

C. Thin-layer chromatography (*2.2.27*).

Test solution. To 2 g of the powdered herbal drug (355) (*2.9.12*) add 25 mL of *ethanol (96 per cent) R* and heat under reflux for 1 h. Filter and evaporate the filtrate to dryness. Dissolve the residue in 2 mL of *ethanol (96 per cent) R*.

Reference solution. Dissolve 5 mg of *sinomenine R* and 5 mg of *papaverine hydrochloride R* in 5 mL of *ethanol (96 per cent) R*.

Plate: *TLC silica gel F_{254} plate R* (2-10 µm).

Mobile phase: *concentrated ammonia R*, *water R*, *toluene R*, *methanol R*, *ethyl acetate R* (2:10:20:30:40 *V/V/V/V/V*).

Application: 8 µL as bands of 8 mm.

Development: over a path of 6 cm.

Drying: in air.

Detection A: examine in ultraviolet light at 254 nm.

Results A: see below the sequence of zones present in the chromatograms obtained with the reference solution and the test solution. Furthermore, other faint fluorescent zones may be present in the chromatogram obtained with the test solution.

Top of the plate	
Papaverine: a quenching zone	A quenching zone
Sinomenine: a quenching zone	A quenching zone (sinomenine)
	A dark blue fluorescent zone
Reference solution	**Test solution**

Detection B: treat with a 10 g/L solution of *sodium nitrite R* in *potassium iodobismuthate solution R5* and allow to dry in air. Examine in daylight.

Results B: see below the sequence of zones present in the chromatograms obtained with the reference solution and the test solution. Furthermore, other faint zones may be present in the chromatogram obtained with the test solution.

Top of the plate	
Papaverine: an orange zone	An orange zone
	3 light orange zones
Sinomenine: an orange zone	An orange zone (sinomenine)
	2 orange zones
	A light orange zone
Reference solution	**Test solution**

TESTS

Loss on drying (*2.2.32*): maximum 10.0 per cent, determined on 1.000 g of the powdered herbal drug (355) (*2.9.12*) by drying in an oven at 105 °C for 3 h.

Total ash (*2.4.16*): maximum 6.0 per cent.

Aristolochic acids (*2.8.21, Method A*). It complies with the test.

ASSAY

Liquid chromatography (*2.2.29*).

Test solution. Disperse 0.500 g of the powdered herbal drug (355) (*2.9.12*) in 20.0 mL of *ethanol (70 per cent V/V) R* in a conical flask and weigh. Sonicate for 20 min. Cool and weigh again. Compensate the loss of solvent with *ethanol (70 per cent V/V) R* and stopper the flask. Shake thoroughly and filter through a membrane filter (nominal pore size 0.45 µm).

Reference solution (a). Dissolve 3.0 mg of *sinomenine CRS* in *methanol R* and dilute to 10.0 mL with the same solvent.

Reference solution (b). Disperse 0.250 g of *orientvine stem HRS* in 10.0 mL of *ethanol (70 per cent V/V) R* in a conical flask and weigh. Sonicate for 20 min. Cool and weigh again. Compensate the loss of solvent with *ethanol (70 per cent V/V) R* and stopper the flask. Shake thoroughly and filter through a membrane filter (nominal pore size 0.45 µm).

Column:
- *size*: *l* = 0.15 m, Ø = 4.6 mm;
- *stationary phase*: *end-capped octadecylsilyl silica gel for chromatography R* (5 µm).

Mobile phase. Adjust a 1.8 g/L solution of *disodium hydrogen phosphate R* to pH 8.0 with a 0.8 g/L solution of *sodium dihydrogen phosphate R*, then adjust to pH 9.0 with a 10 g/L solution of *triethylamine R*. Mix 60 volumes of this solution with 40 volumes of *acetonitrile R*.

Flow rate: 1.0 mL/min.

Detection: spectrophotometer at 262 nm.

Injection: 20 µL.

Retention time: sinomenine = about 3 min.

System suitability: reference solution (b):
- *resolution*: minimum 1.5 between peak 1 and the peak due to sinomenine; identify peak 1 using the chromatogram supplied with *orientvine stem HRS*.

Calculate the percentage content of sinomenine using the following expression:

$$\frac{A_1 \times m_2 \times 2 \times p}{A_2 \times m_1}$$

A_1 = area of the peak due to sinomenine in the chromatogram obtained with the test solution;

A_2 = area of the peak due to sinomenine in the chromatogram obtained with reference solution (a);

m_1 = mass of the herbal drug to be examined used to prepare the test solution, in grams;

m_2 = mass of *sinomenine CRS* used to prepare reference solution (a), in grams;

p = assigned percentage content of sinomenine in *sinomenine CRS*.

01/2008:1822
corrected 6.0

PALE CONEFLOWER ROOT

Echinaceae pallidae radix

DEFINITION

Dried, whole or cut underground parts of *Echinacea pallida* Nutt.

Content: minimum 0.2 per cent of echinacoside ($C_{35}H_{46}O_{20}$; M_r 786.5) (dried drug).

IDENTIFICATION

A. The rhizome and roots are 4-20 mm in diameter, cylindrical and sometimes spirally twisted, longitudinally wrinkled or deeply furrowed; the outer surface is reddish-brown to greyish-brown.

B. Reduce to a powder (355) (*2.9.12*). The powder is greyish-brown to light yellow. Examine under a microscope using *chloral hydrate solution R*. The powder shows the following diagnostic characters: short lignified fibres (100-300 µm in length, up to about 80 µm in diameter) occurring singly or joined together in long bundles, sometimes with phytomelanin deposits; lignified reticulately or scalariformly thickened vessels (up to about 70 µm in diameter); abundant sclereids, occurring singly or in small groups of less than 10, varying considerably in shape from rounded to rectangular or irregular, sometimes much elongated and fibre-like and measuring up to 400 µm in length; all the sclereids have associated black, phytomelanin deposits; fragments of oleoresin canals (up to 240 µm in diameter) with yellowish-orange content; groups of squarish to rectangular cells of the outer layers (about 40 × 80 µm); abundant thin-walled pitted parenchyma with sphaerocrystalline masses of inulin.

C. Examine the chromatograms obtained in the test for other *Echinacea* species and *Parthenium integrifolium*.

Results: see below the sequence of zones present in the chromatograms obtained with the reference solution and the test solution. The chromatogram obtained with the test solution may also show a weak zone close to the solvent front.

Top of the plate	
	A greenish-brown to brown zone
	A yellow zone
	A violet zone
β-Sitosterol: a violet to pink zone	A violet to pink zone (β-sitosterol)
N-Isobutyldodecatetraenamide: a greyish-blue zone	
	A dark grey-blue zone
Reference solution	**Test solution**

D. Examine the chromatograms obtained in the assay.

Results: the major peak in the chromatogram obtained with the test solution is due to echinacoside. Peaks due to caftaric acid, caffeic acid, cynarin, chlorogenic acid and cichoric acid are minor peaks or may be absent.

TESTS

Foreign matter (*2.8.2*): maximum 3 per cent.

Other *Echinacea* species and *Parthenium integrifolium*. Thin-layer chromatography (*2.2.27*).

Test solution. To 1.0 g of the powdered herbal drug (355) (*2.9.12*) add 10 mL of *methylene chloride R* and sonicate for 5 min. Centrifuge and use the supernatant solution.

Reference solution. Dissolve 1 mg of *β-sitosterol R* and a volume of *N-isobutyldodecatetraenamide solution R* corresponding to 1 mg of *N-isobutyldodecatetraenamide R* in *methanol R* and dilute to 5.0 mL with the same solvent.

Plate: *TLC silica gel F_{254} plate R* (5-40 µm) [or *TLC silica gel F_{254} plate R* (2-10 µm)].

Mobile phase: *anhydrous formic acid R*, *cyclohexane R*, *ethyl acetate R*, *toluene R* (0.9:3:6:24 *V/V/V/V*).

Application: 25 µL [or 5 µL] of the test solution and 10 µL [or 4 µL] of the reference solution as bands.

Development: over a path of 15 cm [or 5 cm].

Drying: in a stream of cold air for about 10 min.

Detection: treat the plate using *anisaldehyde solution R* and heat at 105 °C for 3 min; examine in daylight.

Results: the chromatogram obtained with the test solution shows no greyish-blue zone at the position of *N*-isobutyldodecatetraenamide in the chromatogram obtained with the reference solution, and no blue zone at the position of the violet zone due to β-sitosterol in the chromatogram obtained with the reference solution.

Loss on drying (*2.2.32*): maximum 12.0 per cent, determined on 1.000 g of the powdered herbal drug (355) (*2.9.12*) by drying in an oven at 105 °C for 2 h.

Total ash (*2.4.16*): maximum 7.0 per cent.

Ash insoluble in hydrochloric acid (*2.8.1*): maximum 2.0 per cent.

ASSAY

Liquid chromatography (*2.2.29*).

Test solution. In a 100 mL volumetric flask place 0.500 g of the powdered herbal drug (355) (*2.9.12*) and add 80 mL of *ethanol (70 per cent V/V) R*. Sonicate for 15 min and dilute to 100.0 mL with *ethanol (70 per cent V/V) R*. Mix the suspension and allow to stand for a few minutes to allow visible solids to settle. Filter a suitable proportion of the solution through a membrane filter (nominal pore size 0.45 µm) before injection.

Reference solution. Dissolve 10.0 mg of *chlorogenic acid CRS* and 10.0 mg of *caffeic acid R* in *ethanol (70 per cent V/V) R*, sonicate for 15 min and dilute to 10.0 mL with the same solvent. Dilute 4.0 mL of this solution to 100.0 mL with *ethanol (70 per cent V/V) R*.

Column:

- *size*: *l* = 0.25 m, Ø = 4.6 mm;
- *stationary phase*: *octadecylsilyl silica gel for chromatography R* (5 µm);
- *temperature*: 35 °C.

Mobile phase:

- *mobile phase A*: *phosphoric acid R*, *water R* (1:999 *V/V*);
- *mobile phase B*: *acetonitrile R*;

Time (min)	Mobile phase A (per cent *V/V*)	Mobile phase B (per cent *V/V*)
0	90	10
0 - 13	90 → 78	10 → 22
13 - 14	78 → 60	22 → 40
14 - 20	60	40

Flow rate: 1.5 mL/min.

Detection: spectrophotometer at 330 nm.

Injection: 10 µL.

Relative retention with reference to chlorogenic acid (retention time = about 7 min): caftaric acid = about 0.8; caffeic acid = about 1.5; cynarin = about 1.6; echinacoside = about 1.7; cichoric acid = about 2.3.

System suitability: reference solution:

- *resolution*: minimum 10 between the peaks due to caffeic acid and chlorogenic acid.

Locate the peaks due to caffeic acid and chlorogenic acid using the chromatogram obtained with the reference solution. Locate the peaks due to echinacoside, caftaric acid and cichoric acid using the chromatogram in Figure 1822.-1.

Calculate the percentage content of echinacoside using the following expression:

$$\frac{A_1 \times C_2 \times 100 \times 2.221}{A_2 \times C_1}$$

A_1 = area of the peak due to echinacoside in the chromatogram obtained with the test solution;

A_2 = area of the peak due to chlorogenic acid in the chromatogram obtained with the reference solution;

C_1 = concentration of the test solution, in milligrams per millilitre;

C_2 = concentration of chlorogenic acid in the reference solution, in milligrams per millilitre;

2.221 = peak correlation factor between chlorogenic acid and echinacoside.

STORAGE

Uncomminuted.

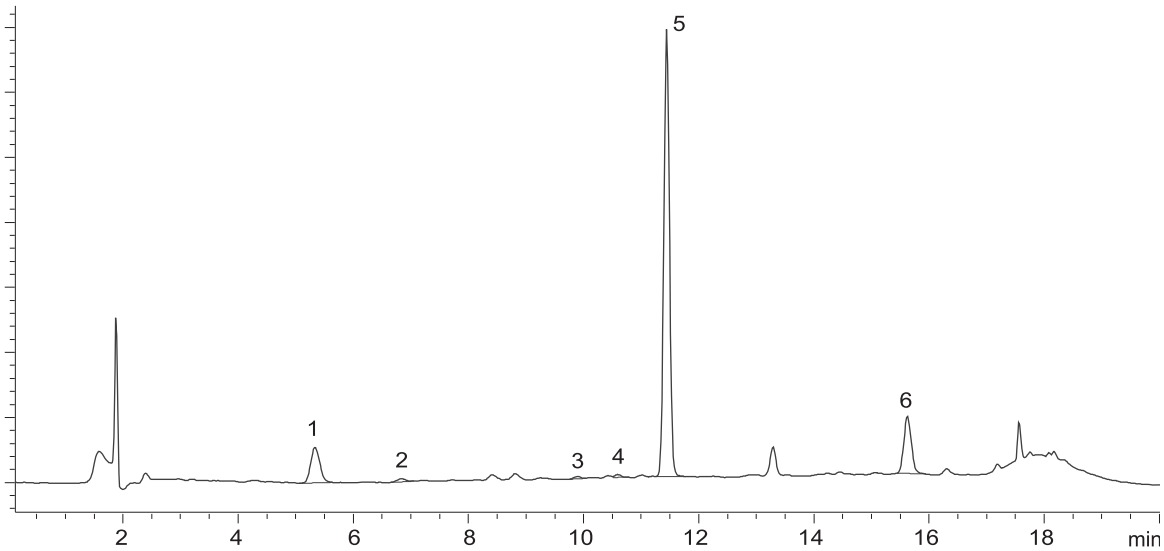

1. caftaric acid 2. chlorogenic acid 3. caffeic acid 4. cynarin 5. echinacoside 6. cichoric acid

Figure 1822.-1. – *Chromatogram for the assay of echinacoside in pale coneflower root*

Herbal drugs

01/2008:1459
corrected 6.0

PASSION FLOWER

Passiflorae herba

DEFINITION

Fragmented or cut, dried aerial parts of *Passiflora incarnata* L. It may also contain flowers and/or fruits.

Content: minimum 1.5 per cent of total flavonoids, expressed as vitexin ($C_{21}H_{20}O_{10}$; M_r 432.4) (dried drug).

IDENTIFICATION

A. The green or greenish-grey or brownish stem is ligneous, hollow, longitudinally striated, glabrous or very slightly pubescent, with a diameter that is generally less than 8 mm. The green or greenish-brown leaves are alternate, finely dentate and pubescent, deeply divided into 3 acute lobes of which the central lobe is the largest. The midrib is much more prominent on the lower surface. The petiole is pubescent and bears 2 dark nectaries near the lamina. The tendrils are very numerous and grow from the axils of the leaves; they are fine, smooth, round and terminated in cylindrical spirals. The radiate flowers, if present, have 3 small bracts and a corolla consisting of 5 white, elongated petals with several rows of filiform, petaloid appendices. If present, the greenish or brownish fruit is flattened and oval; it contains several flattened, brownish-yellow, pitted seeds.

B. Reduce to a powder (355) (*2.9.12*). The powder is light green. Examine under a microscope using *chloral hydrate solution R*. The powder shows the following diagnostic characters: fragments of the leaf epidermis with sinuous walls and anomocytic stomata (*2.8.3*); numerous cluster crystals of calcium oxalate isolated or aligned along the veins; many isolated or grouped fibres from the stems associated with pitted vessels and tracheids; uniseriate trichomes with 1-3 thin-walled cells, straight or slightly curved, ending in a point or sometimes a hook. In addition, the powder shows, if flowers are present, papillose epidermises of the petals and appendages and pollen grains with a reticulate exine; and if mature fruits are present, scattered brown tannin cells and brownish-yellow, pitted fragments of the testa.

C. Examine the chromatograms obtained in the test for other species of *Passiflora*.

Results: the chromatogram obtained with the test solution shows below the zone due to rutin in the chromatogram obtained with the reference solution a zone of intense yellow fluorescence, above it a zone of green fluorescence (diglycosylflavone), below the zone due to hyperoside in the chromatogram obtained with the reference solution a zone of yellow fluorescence (iso-orientin) and above a zone of green fluorescence (isovitexin), above the zone due to hyperoside in the chromatogram obtained with the reference solution a zone of brownish-yellow fluorescence (orientin) and above it a zone of green fluorescence (vitexin). These latter 2 zones may be absent. Further zones may be present.

TESTS

Other species of *Passiflora*. Thin-layer chromatography (*2.2.27*).

Test solution. To 1.0 g of the powdered herbal drug (355) (*2.9.12*) add 5 mL of *methanol R*. Heat to boiling under a reflux condenser for 10 min. Cool and filter.

Reference solution. Dissolve with heating 2.0 mg of *rutin R* and 2.0 mg of *hyperoside R* in 10 mL of *methanol R*.

Plate: *TLC silica gel plate R*.

Mobile phase: *anhydrous formic acid R*, *water R*, *methyl ethyl ketone R*, *ethyl acetate R* (10:10:30:50 *V/V/V/V*).

Application: 10 µL, as bands.

Development: over a path of 15 cm.

Drying: in air.

Detection: spray with a 10 g/L solution of *diphenylboric acid aminoethyl ester R* in *methanol R* and then with a 50 g/L solution of *macrogol 400 R* in *methanol R*. Allow to dry in air for 30 min. Examine in ultraviolet light at 365 nm.

Results: the chromatogram obtained with the reference solution shows in the lower third a zone of yellowish-brown fluorescence due to rutin and in the middle third a zone of yellowish-brown fluorescence due to hyperoside. The chromatogram obtained with the test solution shows no intense zones of greenish-yellow or orange-yellow fluorescence between the zone due to diglycosylflavones and that due to iso-orientin (*P. coerulea* and *P. edulis*).

Total ash (*2.4.16*): maximum 13.0 per cent.

Loss on drying (*2.2.32*): maximum 10.0 per cent, determined on 1.000 g of the powdered herbal drug (355) (*2.9.12*) by drying in an oven at 105 °C for 2 h.

ASSAY

Stock solution. In a 100 mL round-bottomed flask, introduce 0.200 g of the powdered herbal drug (250) (*2.9.12*) and add 40 mL of *ethanol (60 per cent V/V) R*. Heat in a water-bath at 60 °C under a reflux condenser for 30 min while shaking frequently. Allow to cool and filter the mixture through a plug of absorbent cotton in a 100 mL flask. Transfer the absorbent cotton with the drug residue into the round-bottomed flask. Add 40 mL of *ethanol (60 per cent V/V) R* and heat again in a water-bath at 60 °C under reflux for 10 min. Allow to cool and filter the mixture and the first filtrate from the 100 mL flask through a filter paper into the 100 mL volumetric flask. Dilute to 100 mL with the same solvent, while rinsing the flask, round-bottomed flask and filter.

Test solution. Introduce 5.0 mL of stock solution into a flask. Evaporate to dryness under reduced pressure and take up the residue with 10 mL of a mixture of 10 volumes of *methanol R* and 100 volumes of *glacial acetic acid R*. Add 10 mL of a solution consisting of 25 g/L of *boric acid R* and 20 g/L of oxalic acid in *anhydrous formic acid R* and dilute to 25.0 mL with *anhydrous acetic acid R*.

Compensation liquid. Introduce 5.0 mL of the stock solution into a second flask. Evaporate to dryness under reduced pressure and take up the residue with 10 mL of a mixture of 10 volumes of *methanol R* and 100 volumes of *glacial acetic acid R*. Add 10 mL of *anhydrous formic acid R* and dilute to 25.0 mL with *anhydrous acetic acid R*.

After 30 min, measure the absorbance (*2.2.25*) of the test solution at 401 nm, by comparison with the compensation liquid.

Calculate the percentage content of total flavonoids, expressed as vitexin, using the following expression:

$$\frac{A \times 0.8}{m}$$

i.e. taking the specific absorbance of vitexin to be 628.

A = absorbance at 401 nm,

m = mass of the herbal drug to be examined, in grams.

01/2008:1882

PASSION FLOWER DRY EXTRACT

Passiflorae herbae extractum siccum

DEFINITION

Dry extract produced from *Passion flower (1459)*.

Content: minimum 2.0 per cent of flavonoids, expressed as vitexin ($C_{21}H_{20}O_{10}$; M_r 432.4) (dried extract).

Herbal drugs

PRODUCTION

The extract is produced from the herbal drug and ethanol (40 per cent *V/V* to 90 per cent *V/V*), methanol (60 per cent *V/V*) or acetone (40 per cent *V/V*) by an appropriate procedure.

CHARACTERS

Appearance: greenish-brown amorphous powder.

IDENTIFICATION

Thin-layer chromatography (*2.2.27*).

Test solution. To 0.25 g of the extract to be examined add *methanol R*. Shake, filter and dilute to 5 mL with *methanol R*.

Reference solution. Dissolve 2.0 mg of *hyperoside R* and 2.0 mg of *rutin R* in *methanol R* and dilute to 10 mL with the same solvent.

Plate: *TLC silica gel plate R* (5-40 µm) [or *TLC silica gel plate R* (2-10 µm)].

Mobile phase: *anhydrous formic acid R*, *water R*, *methyl ethyl ketone R*, *ethyl acetate R* (10:10:30:50 *V/V/V/V*).

Application: 10 µL [or 5 µL] as bands.

Development: over a path of 15 cm [or 5 cm].

Drying: at 100-105 °C.

Detection: spray with a 10 g/L solution of *diphenylboric acid aminoethyl ester R* in *methanol R*. Subsequently spray with a 50 g/L solution of *macrogol 400 R* in *methanol R*. Allow the plate to dry in air for about 30 min. Examine in ultraviolet light at 365 nm.

Results: see below the sequence of zones present in the chromatograms obtained with the reference solution and the test solution. Other fluorescent zones may be present in the chromatogram obtained with the test solution.

Top of the plate	
———	———
Hyperoside: a yellowish-orange fluorescent zone	A green fluorescent zone
	A yellow fluorescent zone
Rutin: a yellowish-orange fluorescent zone	
———	———
	A green fluorescent zone
Reference solution	**Test solution**

TESTS

Loss on drying (*2.8.17*): maximum 5.0 per cent, determined on 0.500 g.

ASSAY

Stock solution. To 50 mg of the extract to be examined add *ethanol (60 per cent V/V) R*. Shake, filter and dilute to 100.0 mL with *ethanol (60 per cent V/V) R*.

Test solution. Introduce 5.0 mL of the stock solution into a round-bottomed flask and evaporate to dryness under reduced pressure. Take up the residue with 8 mL of a mixture of 10 volumes of *methanol R* and 100 volumes of *glacial acetic acid R* and transfer into a 25 mL volumetric flask. Rinse the round-bottomed flask with 3 mL of a mixture of 10 volumes of *methanol R* and 100 volumes of *glacial acetic acid R* and transfer into the 25 mL volumetric flask. Add 10.0 mL of a solution containing 25.0 g/L of *boric acid R* and 20.0 g/L of *oxalic acid R* in *anhydrous formic acid R* and dilute to 25.0 mL with *anhydrous acetic acid R*.

Compensation liquid. Introduce 5.0 mL of the stock solution into a round-bottomed flask and evaporate to dryness under reduced pressure. Take up the residue with 8 mL of a mixture of 10 volumes of *methanol R* and 100 volumes of *glacial acetic acid R* and transfer into a 25 mL volumetric flask. Rinse the round-bottomed flask with 3 mL of a mixture of 10 volumes of *methanol R* and 100 volumes of *glacial acetic acid R* and transfer into the 25 mL volumetric flask. Add 10.0 mL of *anhydrous formic acid R* and dilute to 25.0 mL with *anhydrous acetic acid R*.

After 30 min, measure the absorbance (*2.2.25*) of the test solution at 401 nm.

Calculate the percentage content of total flavonoids, expressed as vitexin, from the following expression:

$$\frac{A \times 0.8}{m}$$

i.e. taking the specific absorbance of vitexin to be 628.

A = absorbance at 401 nm,

m = mass of the extract to be examined, in grams.

01/2008:2264
corrected 6.0

PELARGONIUM ROOT

Pelargonii radix

DEFINITION

Dried, usually fragmented, underground organs of *Pelargonium sidoides* DC and/or *Pelargonium reniforme* Curt.

Content: minimum 2.0 per cent of tannins, expressed as pyrogallol ($C_6H_6O_3$; M_r 126.1) (dried drug).

IDENTIFICATION

A. The root is covered with dark, partly reddish-brown, longitudinally fissured bark. The transverse section shows, underneath the cork layer, yellow or white wood, which clearly shows partly brownish medullary rays.

B. Reduce to a powder (355 (*2.9.12*)). The powder is brownish-red. Examine under a microscope using *chloral hydrate solution R*. The powder shows the following diagnostic characters: multilayer cork cells consisting of almost uniform, rectangular cells; fragments of parenchyma underneath the cork containing sclereids with a wide lumen; numerous calcium oxalate cluster crystals. Examine under a microscope using a 50 per cent *V/V* solution of *glycerol R*. The powder shows simple starch granules without striations or cracks.

C. Thin-layer chromatography (*2.2.27*).

Test solution. To 0.5 g of the powdered herbal drug (355) (*2.9.12*) add 10 mL of *methanol R*, shake for 15 min and filter.

Reference solution. Dissolve 1 mg of *scopoletin R* and 2 mg of *esculin R* in 20 mL of *methanol R*.

Plate: *TLC silica gel F_{254} plate R* (5-40 µm) [or *TLC silica gel F_{254} plate R* (2-10 µm)].

Mobile phase: *water R*, *methanol R*, *ethyl acetate R* (10:14:76 *V/V/V*).

Application: 10 µL [or 5 µL] as bands.

Development: over a path of 10 cm [or 6 cm].

Drying: in air.

Detection: spray with *alcoholic potassium hydroxide solution R*. Examine in ultraviolet light at 365 nm.

Herbal drugs

Results: see below the sequence of zones present in the chromatograms obtained with the reference solution and the test solution. Furthermore, other blue fluorescent zones may be present in the chromatogram obtained with the test solution.

Top of the plate	
	A blue fluorescent zone
Scopoletin: a very bright blue fluorescent zone	A weak blue fluorescent zone (scopoletin)
———	———
	One or two bright blue fluorescent zones
Esculin: a very bright blue fluorescent zone	
	A blue fluorescent zone
	A weak blue fluorescent zone
———	———
	A blue fluorescent zone
Reference solution	**Test solution**

TESTS

Loss on drying (*2.2.32*): maximum 12.0 per cent, determined on 1.000 g of the powdered herbal drug (355) (*2.9.12*) by drying in an oven at 105 °C.

Total ash (*2.4.16*): maximum 12.0 per cent.

Ash insoluble in hydrochloric acid (*2.8.1*): maximum 3.0 per cent.

ASSAY

Tannins (*2.8.14*). Use 0.750 g of the powdered herbal drug (180) (*2.9.12*).

01/2013:2477
corrected 7.8

PEPPER

Piperis fructus

DEFINITION

Dried, ripe or nearly ripe fruit of *Piper nigrum* L. with an unbroken pericarp (black pepper) or with the outer layers of the pericarp removed (white pepper).

Content:

- *essential oil*: minimum 25 mL/kg (anhydrous drug);
- *piperine* ($C_{17}H_{19}NO_3$; M_r 285.3): minimum 3.0 per cent (anhydrous drug).

IDENTIFICATION

A. *White pepper*. Spheroid berries, 3-5 mm in diameter, slightly flattened at one pole and with a small protuberance at the other, with smooth, externally matt, brownish-grey, greyish-white or pale yellowish-white surface, with numerous pale, linear striations between apex and base.

Black pepper. Spheroid berries, 3-6 mm in diameter, externally blackish-brown, with raised reticular wrinkles, bearing fine remains of the style at the apex and a scar of the peduncle at the base. The texture is hard, the epicarp can be stripped, the endocarp is greyish-white or pale yellow. The fracture is greyish-white, starchy, possessing a small space at the centre.

B. Microscopic examination (*2.8.23*).

White pepper. The powder is light grey. Examine under a microscope using *chloral hydrate solution R*. The powder shows the following diagnostic characters (Figure 2477.-1): fragments of the endocarp in surface view, consisting of more or less polygonal sclereids about 20-30 µm in diameter, which have irregularly thickened walls [Ac, C, Fa] and which may or may not be associated with the testa [A, F], consisting of a layer of indistinct, reddish-brown pigmented cells constituting the 'pigmented layer' [Ab, Fb] and a layer of very thin-walled polygonal cells constituting the 'hyaline layer' [Aa]; fragments of the endocarp, in transverse section [G], showing sclereids with thickened inner walls on the 3 lower sides [Ga], usually associated with the testa (pigmented layer [Gb] and hyaline layer [Gc]); fragments of the parenchyma of the mesocarp [D] containing large oil cells 50-75 µm in diameter [Da]; numerous thin-walled, ovoid or polygonal cells of the parenchyma of the seed [E]; rare, elongated sclereids, with thickened walls, from the fruit peduncle [B]; a few fragments of vascular tissue with narrow spiral vessels [J]. Examine under a microscope using a 50 per cent *V/V* solution of *glycerol R*. Rounded, compound starch granules [H], about 30 µm in diameter, made up of tiny individual granules, ovoid or polyhedral by compression, free [Hb] or included in the parenchymatous cells of the seed [Ha].

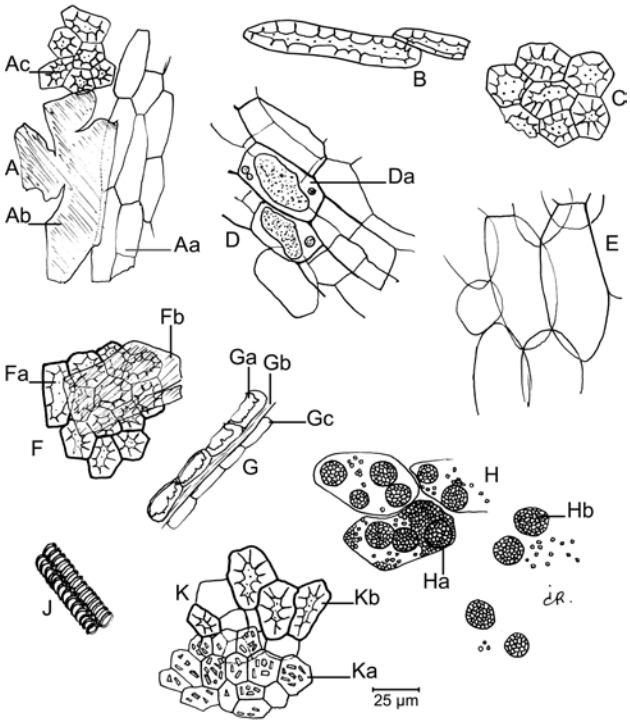

Figure 2477.-1. – *Illustration for identification test B of powdered herbal drug of pepper*

Black pepper. The powder is grey. Examine under a microscope using *chloral hydrate solution R*. In addition to the diagnostic characters described for white pepper, the powdered black pepper shows the following diagnostic characters (Figure 2477.-1): fragments of the epicarp [K] with extremely thin-walled, brownish-red pigmented, polygonal or ovoid cells, which contain small prisms of calcium oxalate [Ka], and which are associated with the outer layers of the mesocarp consisting of groups of sclereids with strongly thickened walls [Kb].

C. Thin-layer chromatography (*2.2.27*).

Test solution. To 0.5 g of the powdered herbal drug (355) (*2.9.12*) add 5 mL of *methanol R*. Sonicate for 10 min, centrifuge and use the supernatant.

Reference solution. Dissolve 10 mg of *borneol R* and 15 mg of *piperine R* in 10 mL of *methanol R*.

Plate: *TLC silica gel F_{254} plate R* (5-40 µm) [or *TLC silica gel F_{254} plate R* (2-10 µm)].

Mobile phase: *ethyl acetate R*, *cyclohexane R* (30:50 *V/V*).

Herbal drugs

Application: 10 µL [or 5 µL] as bands of 10 mm [or 8 mm].

Development: over a path of 15 cm [or 6 cm].

Drying: in air.

Detection A: examine in ultraviolet light at 254 nm.

Results A: see below the sequence of zones present in the chromatograms obtained with the reference solution and the test solution. Furthermore, other faint quenching zones may be present in the chromatogram obtained with the test solution.

Top of the plate	
	3 quenching zones
	A quenching zone
Piperine: a quenching zone	A strong quenching zone (piperine)
Reference solution	**Test solution**

Detection B: treat with *anisaldehyde solution R* and heat at 100 °C for 5 min; examine in daylight.

Results B: see below the sequence of zones present in the chromatograms obtained with the reference solution and the test solution. Furthermore, other zones may be present in the chromatogram obtained with the test solution.

Top of the plate	
	A strong purple zone
	A purple zone
Borneol: a yellowish-brown zone	
	A purple-grey zone
	A violet-grey zone
	A grey zone
Piperine: a green or brownish zone	A green or brownish zone (piperine)
	A grey zone
Reference solution	**Test solution**

TESTS

Foreign matter (*2.8.2*): maximum 3 per cent.

Water (*2.2.13*): maximum 120 mL/kg, determined on 20.0 g of the freshly, coarsely powdered herbal drug (1400) (*2.9.12*) reduced using a knife mill.

Total ash (*2.4.16*): maximum 6.0 per cent.

ASSAY

Essential oil (*2.8.12*). Use 10.0 g of the freshly, coarsely powdered herbal drug (1400) (*2.9.12*), a 1000 mL round-bottomed flask, 400 mL of *water R* as the distillation liquid and 0.5 mL of *xylene R* in the graduated tube. Distil at a rate of 2-3 mL/min for 3 h.

Piperine. Liquid chromatography (*2.2.29*). *Carry out the assay protected from light.*

Test solution. Disperse 0.250 g of the powdered herbal drug (355) (*2.9.12*) in 40 mL of *ethanol (96 per cent) R*. Sonicate for 20 min and filter. Rinse the flask and the filter with 5 mL of *ethanol (96 per cent) R*, combine the filtrate and washings and dilute to 50.0 mL with the same solvent. Filter through a membrane filter (nominal pore size 0.45 µm).

Reference solution (a). Dissolve 15.0 mg of *piperine CRS* in *ethanol (96 per cent) R* and dilute to 100.0 mL with the same solvent.

Reference solution (b). Disperse 0.250 g of *long pepper for system suitability HRS* (355) (*2.9.12*) in 40 mL of *ethanol (96 per cent) R*. Sonicate for 20 min and filter. Rinse the flask and the filter with 5 mL of *ethanol (96 per cent) R*, combine the filtrate and washings and dilute to 50.0 mL with the same solvent. Filter through a membrane filter (nominal pore size 0.45 µm).

Column:

- *size*: *l* = 0.15 m, Ø = 4.6 mm;
- *stationary phase*: *end-capped octadecylsilyl silica gel for chromatography R* (5 µm).

Mobile phase:

- *mobile phase A*: *water R*;
- *mobile phase B*: *acetonitrile R*;

Time (min)	Mobile phase A (per cent *V/V*)	Mobile phase B (per cent *V/V*)
0 - 5	50	50
5 - 20	50 → 5	50 → 95
20 - 22	5 → 0	95 → 100

Flow rate: 1.0 mL/min.

Detection: spectrophotometer at 343 nm.

Injection: 10 µL.

Retention time: piperine = about 10 min.

Identification of peaks: use the chromatogram supplied with *long pepper for system suitability HRS* and the chromatogram obtained with reference solution (b) to identify the peak due to piperine and peak 2.

System suitability: reference solution (b):

- *peak-to-valley ratio*: minimum 4, where H_p = height above the baseline of peak 2 and H_v = height above the baseline of the lowest point of the curve separating the peak due to piperine from peak 2.

Calculate the percentage content of piperine using the following expression:

$$\frac{A_1 \times m_2 \times p}{A_2 \times m_1 \times 2}$$

A_1 = area of the peak due to piperine in the chromatogram obtained with the test solution;

A_2 = area of the peak due to piperine in the chromatogram obtained with reference solution (a);

m_1 = mass of the herbal drug to be examined used to prepare the test solution, in grams;

m_2 = mass of *piperine CRS* used to prepare reference solution (a), in grams;

p = percentage content of piperine in *piperine CRS*.

01/2011:0406

PEPPERMINT LEAF

Menthae piperitae folium

DEFINITION

Whole or cut dried leaves of *Mentha ×piperita* L.

Content: minimum 12 mL/kg of essential oil for the whole drug and minimum 9 mL/kg of essential oil for the cut drug.

CHARACTERS

Characteristic and penetrating odour.

Characteristic aromatic taste.

Peppermint leaf is green or brownish-green, with brownish-violet veins in some varieties. The petioles are green or brownish-violet.

IDENTIFICATION

A. The leaf is entire, broken or cut, thin, fragile and often crumpled; the entire leaf is 3-9 cm long and 1-3 cm wide. The lamina is oval or lanceolate, the apex acuminate, the margin sharply dentate and the base asymmetrical. Venation is pinnate, prominent on the lower surface, with lateral veins leaving the midrib at about 45°. The lower surface is slightly pubescent and secretory trichomes are visible under a lens (6×) as bright yellowish points. The petiole is grooved, usually up to 1 mm in diameter and 0.5-1 cm long.

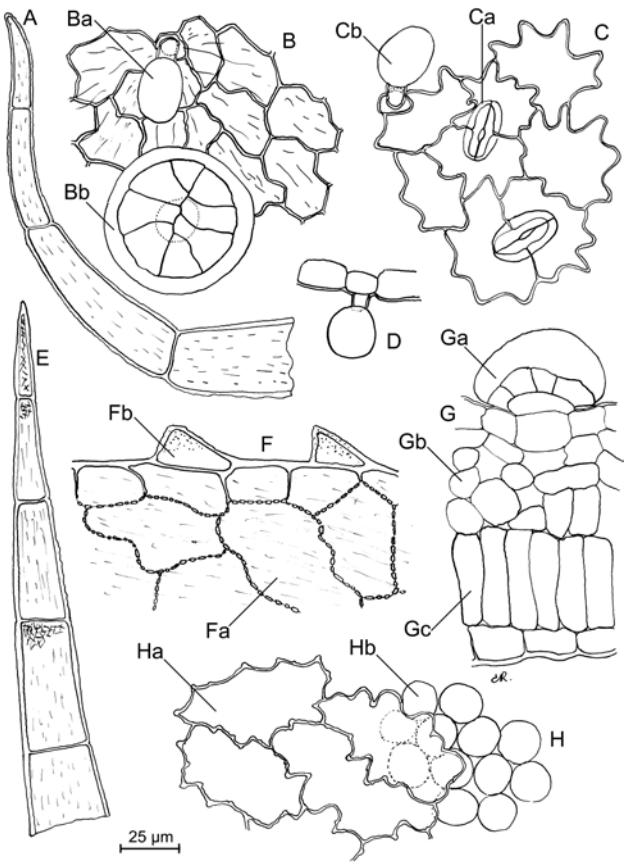

Figure 0406.-1. – *Illustration for identification test B of powdered herbal drug of peppermint leaf*

B. Reduce to a powder (355) (*2.9.12*). The powder is brownish-green. Examine under a microscope using *chloral hydrate solution R*. The powder shows the following diagnostic characters (Figure 0406.-1): fragments of epidermises bearing covering and glandular trichomes; adaxial epidermis, in surface view [B, H], having cells with sinuous-wavy walls [Ha] and cuticle striated over the veins (B) associated with palisade parenchyma [Hb]; abaxial epidermis [C] with diacytic stomata (*2.8.3*) [Ca]; covering trichomes are usually fragmented, elongated, uniseriate with 3-8 cells with striated cuticle [A, E]; glandular trichomes of 2 types: a) unicellular stalk with small, rounded unicellular head 15-25 µm in diameter, in surface view [Ba, Cb] or in transverse section [D], b) unicellular stalk with enlarged oval head 55-70 µm in diameter composed of 8 radiating cells, in surface view [Bb] or in transverse section [Ga]; fragments from near the leaf margin [F] with isodiametric cells whose anticlinal walls are more-or-less straight and beaded [Fa] and short, conical, unicellular or bicellular covering trichomes [Fb]; dorsiventral mesophyll fragments, in transverse section [G], with a single palisade layer [Gc] and 4-6 layers of spongy parenchyma [Gb]. Yellowish crystals of menthol under the cuticle of secretory cells may be present.

C. Thin-layer chromatography (*2.2.27*).

Test solution. To 0.2 g of the recently powdered herbal drug add 2 mL of *methylene chloride R*, shake for a few minutes and filter. Evaporate the filtrate to dryness at about 40 °C and dissolve the residue in 0.1 mL of *toluene R*.

Reference solution. Dissolve 50 mg of *menthol R*, 20 µL of *cineole R*, 10 mg of *thymol R* and 10 µL of *menthyl acetate R* in *toluene R* and dilute to 10 mL with the same solvent.

Plate: *TLC silica gel GF$_{254}$ plate R*.

Mobile phase: *ethyl acetate R*, *toluene R* (5:95 *V/V*).

Application: 10 µL of the reference solution and 20 µL of the test solution, as bands.

Development: over a path of 15 cm.

Drying: in air until the solvent has evaporated.

Detection A: examine in ultraviolet light at 254 nm.

Results A: see below the sequence of zones present in the chromatograms obtained with the reference solution and the test solution. Furthermore, other weak quenching zones may be present in the chromatogram obtained with the test solution.

Top of the plate	
Thymol: a quenching zone	Quenching zones may be present (carvone, pulegone)
Reference solution	**Test solution**

Detection B: spray with *anisaldehyde solution R* and examine in daylight while heating for 5-10 min at 100-105 °C.

Results B: see below the sequence of zones present in the chromatograms obtained with the reference solution and the test solution. Furthermore, other faint zones may be present in the chromatogram obtained with the test solution.

Top of the plate	
	An intense violet-red zone (near the solvent front) (hydrocarbons)
Menthyl acetate: a violet-blue zone	A violet-blue zone (menthyl acetate)
	A greenish-blue zone (menthone)
Thymol: a pink zone	
	Light pink or greyish-blue or greyish-green zones may be present (carvone, pulegone, isomenthone)
Cineole: a violet-blue or brown zone	A faint violet-blue or brown zone (cineole)
Menthol: an intense blue or violet zone	An intense blue or violet zone (menthol)
Reference solution	**Test solution**

Herbal drugs

TESTS

Foreign matter (*2.8.2*): maximum 5 per cent stems, whose diameter is not greater than 1.5 mm; maximum 2 per cent foreign elements; not more than 8 per cent of the leaves show brown stains due to *Puccinia menthae*.

Carry out the determination using 10 g of the drug.

Water (*2.2.13*): maximum 110 mL/kg, determined on 20.0 g.

Total ash (*2.4.16*): maximum 15.0 per cent.

Ash insoluble in hydrochloric acid (*2.8.1*): maximum 1.5 per cent.

ASSAY

Essential oil (*2.8.12*). Use 20.0 g of crushed drug, a 500 mL flask, 200 mL of *water R* as the distillation liquid and 0.50 mL of *xylene R* in the graduated tube. Distil at a rate of 3-4 mL/min for 2 h.

04/2009:2382

PEPPERMINT LEAF DRY EXTRACT

Menthae piperitae folii extractum siccum

DEFINITION

Dry extract produced from *Peppermint leaf (0406)*.

Content: minimum 0.5 per cent of rosmarinic acid ($C_{18}H_{16}O_8$; M_r 360.33) (dried extract).

PRODUCTION

The extract is produced from the herbal drug by a suitable procedure using ethanol (30-50 per cent *V/V*) or water of minimum 60 °C.

CHARACTERS

Appearance: brown, amorphous powder.

IDENTIFICATION

Thin-layer chromatography (*2.2.27*).

Test solution. To 0.2 g of the extract to be examined add 5 mL of *methanol R*. Sonicate for 5 min and filter.

Reference solution. Dissolve 5 mg of *rosmarinic acid R*, 1 mg of *hyperoside R* and 1 mg of *rutin R* in 10 mL of *methanol R*.

Plate: *TLC silica gel plate R* (5-40 µm) [or *TLC silica gel plate R* (2-10 µm)].

Mobile phase: *anhydrous formic acid R*, *water R*, *ethyl acetate R* (6:6:90 *V/V/V*).

Application: 10 µL [or 4 µL] as bands of 15 mm [or 8 mm].

Development: over a path of 8 cm [or 6 cm].

Drying: in air.

Detection: heat at 100 °C for 5 min and spray the hot plate with a 5 g/L solution of *diphenylboric acid aminoethyl ester R* in *ethyl acetate R*; examine in ultraviolet light at 365 nm.

Results: see below the sequence of zones present in the chromatograms obtained with the reference solution and the test solution. Furthermore, other faint zones may be present in the chromatogram obtained with the test solution.

Top of the plate	
Rosmarinic acid: a light blue fluorescent zone	A light blue fluorescent zone (rosmarinic acid)
———	———
———	———
Hyperoside: an orange fluorescent zone	
	A yellow fluorescent zone
	A brown fluorescent zone
Rutin: an orange fluorescent zone	A yellow fluorescent zone
Reference solution	**Test solution**

ASSAY

Liquid chromatography (*2.2.29*).

Test solution. Use brown glass flasks. To 0.400 g of the extract to be examined add 15 mL of *ethanol (50 per cent V/V) R*, sonicate for 10 min and filter into a 20 mL volumetric flask. Rinse the flask and the filter with *ethanol (50 per cent V/V) R* and dilute to 20.0 mL with the same solvent.

Reference solution (a). Dissolve 10.0 mg of *rosmarinic acid CRS* in *ethanol (50 per cent V/V) R* and dilute to 100.0 mL with the same solvent.

Reference solution (b). Dissolve 5 mg of *ferulic acid R* in reference solution (a) and dilute to 50 mL with the same solution.

Column:

- *size*: *l* = 0.25 m, Ø = 4.6 mm;
- *stationary phase*: *octadecylsilyl silica gel for chromatography R* (5 µm).

Mobile phase:

- *mobile phase A*: *phosphoric acid R*, *acetonitrile R*, *water R* (1:19:80 *V/V/V*);
- *mobile phase B*: *phosphoric acid R*, *methanol R*, *acetonitrile R* (1:40:59 *V/V/V*);

Time (min)	Mobile phase A (per cent *V/V*)	Mobile phase B (per cent *V/V*)
0 - 20	100 → 55	0 → 45
20 - 25	55 → 0	45 → 100
25 - 30	0 → 100	100 → 0

Flow rate: 1.2 mL/min.

Detection: spectrophotometer at 330 nm.

Injection: 20 µL.

Relative retention with reference to rosmarinic acid (retention time = about 11 min): ferulic acid = about 0.8.

System suitability: reference solution (b):

- *resolution*: minimum 4.0 between the peaks due to ferulic acid and rosmarinic acid.

Herbal drugs

Calculate the percentage content of rosmarinic acid using the following expression:

$$\frac{A_1 \times m_2 \times p \times 0.2}{A_2 \times m_1}$$

A_1 = area of the peak due to rosmarinic acid in the chromatogram obtained with the test solution;

A_2 = area of the peak due to rosmarinic acid in the chromatogram obtained with reference solution (a);

m_1 = mass of the extract to be examined used to prepare the test solution, in grams;

m_2 = mass of *rosmarinic acid CRS* used to prepare reference solution (a), in grams;

p = percentage content of rosmarinic acid in *rosmarinic acid CRS*.

07/2012:0405

PEPPERMINT OIL

Menthae piperitae aetheroleum

DEFINITION

Essential oil obtained by steam distillation from the fresh aerial parts of the flowering plant of *Mentha ×piperita* L.

CHARACTERS

Appearance: colourless, pale yellow or pale greenish-yellow liquid.

Characteristic odour and taste followed by a sensation of cold.

Solubility: miscible with ethanol (96 per cent) and with methylene chloride.

IDENTIFICATION

First identification: B.

Second identification: A.

A. Examine the chromatograms obtained in test A for mint oil.

Results A: see below the sequence of zones present in the chromatograms obtained with the reference solution and the test solution.

Top of the plate	
———	———
Thymol: a quenching zone	
	Quenching zones may be present (carvone, pulegone)
———	———
Reference solution	**Test solution**

Results B: see below the sequence of zones present in the chromatograms obtained with the reference solution and the test solution. Furthermore, other less intensely coloured zones may be present in the chromatogram obtained with the test solution.

Top of the plate	
	An intense violet-red zone (near the solvent front) (hydrocarbons)
	A brownish-yellow zone (menthofuran)
———	———
Menthyl acetate: a violet-blue zone	A violet-blue zone (menthyl acetate)
	A greenish-blue zone (menthone)
Thymol: a pink zone	
	Light pink or greyish-blue or greyish-green zones may be present (carvone, pulegone, isomenthone)
1,8-Cineole: a violet-blue or brown zone	A faint violet-blue or brown zone (1,8-cineole)
———	———
Menthol: an intense blue or violet zone	An intense blue or violet zone (menthol)
Reference solution	**Test solution**

B. Examine the chromatograms obtained in the test for chromatographic profile.

Results: the characteristic peaks due to limonene, 1,8-cineole, menthone, menthofuran, isomenthone, menthyl acetate and menthol in the chromatogram obtained with the test solution are similar in retention time to those in the chromatogram obtained with reference solution (a). Isopulegol, pulegone and carvone may be present in the chromatogram obtained with the test solution.

TESTS

Relative density (*2.2.5*): 0.900 to 0.916.

Refractive index (*2.2.6*): 1.457 to 1.467.

Optical rotation (*2.2.7*): – 30° to – 10°.

Acid value (*2.5.1*): maximum 1.4, determined on 5.0 g diluted in 50 mL of the prescribed mixture of solvents.

Fatty oils and resinified essential oils (*2.8.7*). It complies with the test for fatty oils and resinified essential oils.

Mint oil

A. Thin-layer chromatography (*2.2.27*).

Test solution. Mix 0.1 g of the substance to be examined with *toluene R* and dilute to 10 mL with the same solvent.

Reference solution. Dissolve 50 mg of *menthol R*, 20 µL of *cineole R*, 10 mg of *thymol R* and 10 µL of *menthyl acetate R* in *toluene R* and dilute to 10 mL with the same solvent.

Plate: *TLC silica gel F_{254} plate R* (5-40 µm) [or *TLC silica gel F_{254} plate R* (2-10 µm)].

Mobile phase: *ethyl acetate R*, *toluene R* (5:95 *V/V*).

Application: 10 µL [or 1 µL] of the reference solution and 20 µL [or 2 µL] of the test solution, as bands of 10 mm [or 8 mm].

Development: over a path of 15 cm [or 6 cm].

Drying: in air.

Detection A: examine in ultraviolet light at 254 nm.

Detection B: treat with *anisaldehyde solution R* and heat at 100-105 °C for 5-10 min; examine immediately in daylight.

Results B: the chromatogram obtained with the test solution shows no blue zone between the zones due to 1,8-cineole and menthol.

Herbal drugs

B. Examine the chromatograms obtained in the test for chromatographic profile.

Results: the chromatogram obtained with the test solution does not show a peak with the retention time of isopulegol that has an area of more than 0.2 per cent of the total area.

Chromatographic profile. Gas chromatography (*2.2.28*): use the normalisation procedure.

Test solution. Mix 0.20 mL of the substance to be examined with *heptane R* and dilute to 10.0 mL with the same solvent.

Reference solution (a). Dissolve 10 µL of *limonene R*, 20 µL of *cineole R*, 40 µL of *menthone R*, 10 µL of *menthofuran R*, 10 µL of *isomenthone R*, 40 µL of *menthyl acetate R*, 20 µL of *isopulegol R*, 60 mg of *menthol R*, 20 µL of *pulegone R*, 10 µL of *piperitone R* and 10 µL of *carvone R* in *heptane R* and dilute to 10.0 mL with the same solvent.

Reference solution (b). Dissolve 5 µL of *isopulegol R* in *heptane R* and dilute to 10.0 mL with the same solvent. Dilute 0.1 mL of the solution to 5.0 mL with *heptane R*.

Column:

- *material*: fused silica;
- *size*: *l* = 60 m, Ø = 0.25 mm;
- *stationary phase*: *macrogol 20 000 R* (film thickness 0.25 µm).

Carrier gas: *helium for chromatography R*.

Flow rate: 1.5 mL/min.

Split ratio: 1:50.

Temperature:

	Time (min)	Temperature (°C)
Column	0 - 10	60
	10 - 70	60 → 180
	70 - 75	180
Injection port		200
Detector		220

Detection: flame ionisation.

Injection: 1 µL.

Elution order: order indicated in the composition of reference solution (a); record the retention times of these substances.

Identification of peaks: using the retention times determined from the chromatogram obtained with reference solution (a), locate the components of reference solution (a) in the chromatogram obtained with the test solution.

System suitability: reference solution (a):

- *resolution*: minimum 1.5 between the peaks due to limonene and 1,8-cineole; minimum 1.5 between the peaks due to piperitone and carvone.

Determine the percentage content of each of the following components. The limits are within the following ranges:

- *limonene*: 1.0 per cent to 3.5 per cent;
- *1,8-cineole*: 3.5 per cent to 8.0 per cent;
- *menthone*: 14.0 per cent to 32.0 per cent;
- *menthofuran*: 1.0 per cent to 8.0 per cent;
- *isomenthone*: 1.5 per cent to 10.0 per cent;
- *menthyl acetate*: 2.8 per cent to 10.0 per cent;
- *isopulegol*: maximum 0.2 per cent;
- *menthol*: 30.0 per cent to 55.0 per cent;
- *pulegone*: maximum 3.0 per cent,
- *carvone*: maximum 1.0 per cent;
- *disregard limit*: the area of the principal peak in the chromatogram obtained with reference solution (b) (0.05 per cent).

The ratio of 1,8-cineole content to limonene content is minimum 2.

STORAGE

At a temperature not exceeding 25 °C.

01/2008:0754

PERU BALSAM

Balsamum peruvianum

DEFINITION

Balsam obtained from the scorched and wounded trunk of *Myroxylon balsamum* (L.) Harms var. *pereirae* (Royle) Harms.

Content: 45.0 per cent *m/m* to 70.0 per cent *m/m* of esters, mainly benzyl benzoate and benzyl cinnamate.

CHARACTERS

Appearance: dark brown, viscous liquid which is transparent and yellowish-brown when viewed in a thin layer; it is not sticky, non-drying and does not form threads.

Solubility: practically insoluble in water, freely soluble in anhydrous ethanol, not miscible with fatty oils, except for castor oil.

IDENTIFICATION

A. Dissolve 0.20 g in 10 mL of *ethanol (96 per cent) R*. Add 0.2 mL of *ferric chloride solution R1*. A green or yellowish-green colour develops.

B. Thin-layer chromatography (*2.2.27*).

Test solution. Dissolve 0.5 g of the substance to be examined in 10 mL of *ethyl acetate R*.

Reference solution. Dissolve 4 mg of *thymol R*, 30 mg of *benzyl cinnamate R* and 80 µL of *benzyl benzoate R* in 5 mL of *ethyl acetate R*.

Plate: *TLC silica gel GF_{254} plate R*.

Mobile phase: *glacial acetic acid R*, *ethyl acetate R*, *hexane R* (0.5:10:90 *V/V/V*).

Application: 10 µL, as bands of 20 mm by 3 mm.

Development: twice over a path of 10 cm.

Drying: in air.

Detection A: examine in ultraviolet light at 254 nm and mark the quenching zones.

Results A: the chromatogram obtained with the reference solution shows in the upper third 2 quenching zones, the higher one due to benzyl benzoate and the lower one due to benzyl cinnamate. The chromatogram obtained with the test solution shows 2 quenching zones at the same levels and of approximately the same size.

Detection B: spray with a freshly prepared 200 g/L solution of *phosphomolybdic acid R* in *ethanol (96 per cent) R*, using 10 mL for a plate 200 mm square and examine in daylight while heating at 100-105 °C for 5-10 min.

Results B: the zones due to benzyl benzoate and benzyl cinnamate are blue against a yellow background. The chromatogram obtained with the reference solution shows at about the middle a violet-grey zone (thymol). In the chromatogram obtained with the test solution, a blue zone (nerolidol) is seen just below the level of the zone due to thymol in the chromatogram obtained with the reference solution. Just below the zone due to nerolidol, no blue zone is seen corresponding to a quenching zone seen when examined in ultraviolet light at 254 nm (colophony). In the upper and lower part of the chromatogram obtained with the test solution, other faint blue zones may be seen.

TESTS

Relative density (*2.2.5*): 1.14 to 1.17.

Saponification value (*2.5.6*): 230 to 255, determined on the residue obtained in the assay.

Artificial balsams. Shake 0.20 g with 6 mL of *light petroleum R1*. The light petroleum solution is clear and colourless and the whole of the insoluble parts of the balsam stick to the wall of the test-tube.

Fatty oils. Shake 1 g with 3 mL of a 1000 g/L solution of *chloral hydrate R*. The resulting solution is as clear as the 1000 g/L solution of *chloral hydrate R*.

Turpentine. Evaporate to dryness 4 mL of the solution obtained in the test for artificial balsams. The residue has no odour of turpentine.

ASSAY

To 2.50 g in a separating funnel add 7.5 mL of *dilute sodium hydroxide solution R* and 40 mL of *peroxide-free ether R* and shake vigorously for 10 min. Separate the lower layer and shake it with 3 quantities, each of 15 mL, of *peroxide-free ether R*. Combine the ether layers, dry over 10 g of *anhydrous sodium sulfate R* and filter. Wash the sodium sulfate with 2 quantities, each of 10 mL, of *peroxide-free ether R*. Combine the ether layers and evaporate to dryness. Dry the residue (esters) at 100-105 °C for 30 min and weigh.

STORAGE

Protected from light.

01/2008:1842

PINE SYLVESTRIS OIL

Pini sylvestris aetheroleum

DEFINITION

Essential oil obtained by steam distillation of the fresh leaves and branches of *Pinus sylvestris* L. A suitable antioxidant may be added.

CHARACTERS

Appearance: clear, colourless or pale yellow liquid.

Characteristic odour.

IDENTIFICATION

First identification: B.

Second identification: A.

A. Thin-layer chromatography (*2.2.27*).

Test solution. Dilute 1 mL of the substance to be examined to 10 mL with *toluene R*.

Reference solution. Dissolve 10 mg of *borneol R* and 10 µL of *bornyl acetate R* in *toluene R* and dilute to 10 mL with the same solvent.

Plate: *TLC silica gel plate R* (5-40 µm) [or *TLC silica gel plate R* (2-10 µm)].

Mobile phase: *ethyl acetate R*, *toluene R* (5:95 *V/V*).

Application: 10 µL [or 2 µL] as bands.

Development: over a path of 15 cm [or 6 cm].

Drying: in air.

Detection: treat with *anisaldehyde solution R*, heat at 100-105 °C for 5-10 min and examine in daylight.

Results: see below the sequence of the zones present in the chromatograms obtained with the reference solution and the test solution. Furthermore other faint zones may be present in the chromatogram obtained with the test solution.

Top of the plate	
	A pink zone (hydrocarbons)
Bornyl acetate: a brown or grey-brown zone	A brown or grey-brown zone (bornyl acetate) A pink zone
Borneol: a brown or grey-brown zone	A cluster of violet zones
Reference solution	**Test solution**

B. Examine the chromatograms obtained in the test for chromatographic profile.

Results: the characteristic peaks in the chromatogram obtained with the test solution are similar in retention time to those in the chromatogram obtained with reference solution (a).

TESTS

Relative density (*2.2.5*): 0.855 to 0.875.

Refractive index (*2.2.6*): 1.465 to 1.480.

Optical rotation (*2.2.7*): – 9° to – 30°.

Acid value (*2.5.1*): maximum 1.0.

Peroxide value (*2.5.5*): maximum 20.

Fatty oils and resinified oils (*2.8.7*). It complies with the test.

Chromatographic profile. Gas chromatography (*2.2.28*): use the normalisation procedure.

Test solution. The substance to be examined.

Reference solution (a). Dissolve 30 µL of *α-pinene R*, 10 mg of *camphene R*, 20 µL of *β-pinene R*, 10 µL of *car-3-ene R*, 10 µL of *β-myrcene R*, 20 µL of *limonene R*, 10 µL of *p-cymene R*, 10 µL of *terpinolene R*, 10 µL of *bornyl acetate R* and 10 µL of *β-caryophyllene R* in 1 mL of *heptane R*.

Reference solution (b). Dissolve 10 mg of *camphene R* in *heptane R* and dilute to 2 mL with the same solvent. Dilute 0.1 mL of the solution to 1 mL with *heptane R*.

Column:
- *material*: fused silica,
- *size*: *l* = 60 m, Ø = 0.22 mm,
- *stationary phase*: *macrogol 20 000 R* (0.2 µm).

Carrier gas: *helium for chromatography R*.

Flow rate: 1.5 mL/min.

Split ratio: 1:100.

Temperature:

	Time (min)	Temperature (°C)
Column	0 - 10	65
	10 - 41	65 → 220
	41 - 50	220
Injection port		220
Detector		250

Detection: flame ionisation.

Injection: 0.2 µL.

Elution order: order indicated in the preparation of reference solution (a). Record the retention times of these substances.

System suitability: reference solution (a):
- *resolution*: minimum 1.5 between the peaks due to car-3-ene and β-myrcene.

Identification of components: using the retention times determined from the chromatogram obtained with reference solution (a), locate the components of reference solution (a)

Herbal drugs

in the chromatogram obtained with the test solution. The peak due to β-phellandrene is eluted after the peak due to limonene with a relative retention of about 1.03 with reference to limonene.

Determine the percentage content of these components. The limits are within the following ranges:

- *α-pinene*: 32.0 per cent to 60.0 per cent,
- *camphene*: 0.5 per cent to 2.0 per cent,
- *β-pinene*: 5.0 per cent to 22.0 per cent,
- *car-3-ene*: 6.0 per cent to 18.0 per cent,
- *β-myrcene*: 1.5 per cent to 10.0 per cent,
- *limonene*: 7.0 per cent to 12.0 per cent,
- *β-phellandrene*: maximum 2.5 per cent,
- *p-cymene*: maximum 2.0 per cent,
- *terpinolene*: maximum 4.0 per cent,
- *bornyl acetate*: 1.0 per cent to 4.0 per cent,
- *β-caryophyllene*: 1.0 per cent to 6.0 per cent,
- *disregard limit*: the area of the principal peak in the chromatogram obtained with reference solution (b).

STORAGE

At a temperature not exceeding 25 °C.

07/2012:2475

PORIA

Poria

DEFINITION

Dried sclerotium without skin of *Wolfiporia extensa* (Peck) Ginns (syn. *Poria cocos* (Schw.) Wolf; *Wolfiporia cocos* (F.A. Wolf) Ryvarden & Gilb.).

IDENTIFICATION

A. Square, rectangular or polyhedral pieces, or slices, varying in length and thickness; whitish with a pale brown hue, flat and smooth, square, rectangular or polyhedral pieces, with no brown skin, difficult to break; slices easily broken, rough fracture with granular or farinaceous texture.

B. Microscopic examination (*2.8.23*). The powder is whitish with a pale brown hue. Examine under a microscope using *chloral hydrate solution R*. The powder shows the following diagnostic characters: irregularly shaped and occasionally branched colourless particles, which dissolve gradually in *chloral hydrate solution R*. Examine under a microscope using a 50 g/L solution of *potassium hydroxide R*. The powder shows the following diagnostic characters: fragments of hyphae, colourless, slender, slightly curved, sometimes with septa, branched, 3-16 µm in diameter.

C. Thin-layer chromatography (*2.2.27*).

Test solution. To 1 g of the powdered herbal drug (250) (*2.9.12*) add a mixture of 2 mL of *ethyl acetate R* and 3 mL of *methanol R*. Sonicate for 10 min, centrifuge and use the supernatant.

Reference solution. Dissolve 10 mg of *4-aminobenzoic acid R*, 10 mg of *coumarin R* and 10 mg of *thymol R* in 10 mL of *methanol R*.

Plate: *TLC silica gel F_{254} plate R* (2-10 µm).

Mobile phase: *glacial acetic acid R*, *2-propanol R*, *cyclohexane R* (10:10:80 *V/V/V*).

Application: 5 µL as bands of 8 mm.

Development: over a path of 6 cm.

Drying: in air.

Detection: examine in ultraviolet light at 254 nm.

Results: see below the sequence of zones present in the chromatograms obtained with the reference solution and the test solution. Furthermore, other faint quenching zones may be present in the chromatogram obtained with the test solution between the zones due to 4-aminobenzoic acid and coumarin in the chromatogram obtained with the reference solution.

Top of the plate	
Thymol: a quenching zone Coumarin: a quenching zone 4-Aminobenzoic acid: a quenching zone	2 quenching zones
Reference solution	**Test solution**

D. The herbal drug sticks to the pestle when moistened with *water R* and pressed into a mortar.

E. To a small piece of the herbal drug add 1 drop of *iodinated potassium iodide solution R1*. A deep red colour is produced.

TESTS

Foreign matter (*2.8.2*): maximum 0.1 per cent of brown skins and roots of conifer and maximum 2 per cent of other foreign matter.

Loss on drying (*2.2.32*): maximum 13.0 per cent, determined on 1.000 g of the powdered herbal drug (355) (*2.9.12*) by drying in an oven at 105 °C for 2 h.

Total ash (*2.4.16*): maximum 1.0 per cent.

Water-soluble extractive: minimum 1.5 per cent.

To 5.00 g of the powdered herbal drug (355) (*2.9.12*) add 100 mL of boiling *water R*. Allow to stand for 10 min, shaking occasionally. Allow to cool, dilute to 100.0 mL with *water R* and filter. Evaporate 25.0 mL of the filtrate to dryness on a water-bath. Dry the residue in an oven at 100-105 °C. The residue weighs a minimum of 18.75 mg.

04/2013:1364

PRIMULA ROOT

Primulae radix

DEFINITION

Whole or cut, dried rhizome and root of *Primula veris* L. or *Primula elatior* Hill.

IDENTIFICATION

A. The coarsely torose, greyish-brown rhizome is straight or slightly curved, about 1-5 cm long and about 2-4 mm thick. The rhizome crown often bears the remains of stems and leaves. Attached to the rhizome are numerous brittle roots, about 1 mm thick and usually 6-8 cm long. The root of *P. elatior* is light brown or reddish-brown, that of *P. veris* light yellow or yellowish-white. The fracture is smooth.

B. Microscopic examination (*2.8.23*). The powder is greyish-brown. Examine under a microscope using *chloral hydrate solution R*. The powder shows the following diagnostic characters (Figure 1364.-1): fragments of parenchyma from the bark of the root or the rhizome and from the medulla of the rhizome [G, H], consisting of rounded or ovoid cells with irregularly thickened and pitted walls; brownish fragments from the dermal tissue of the root showing absorbent hairs [C]; yellow or brownish fragments of the epidermis of the rhizome covered by a striated cuticle, in surface view [A], or in transverse section

Herbal drugs

[F] accompanied by parenchyma from the bark [Fa]; reticulate vessels [B] sometimes accompanied by spiral vessels [J]; groups of large, strongly pitted, yellowish-green sclereids from the medullary parenchyma of the rhizome [E], which are characteristic of *P. elatior*. Examine under a microscope using a 50 per cent *V/V* solution of *glycerol R*. The powder shows simple or compound starch granules of various shapes and sizes [D].

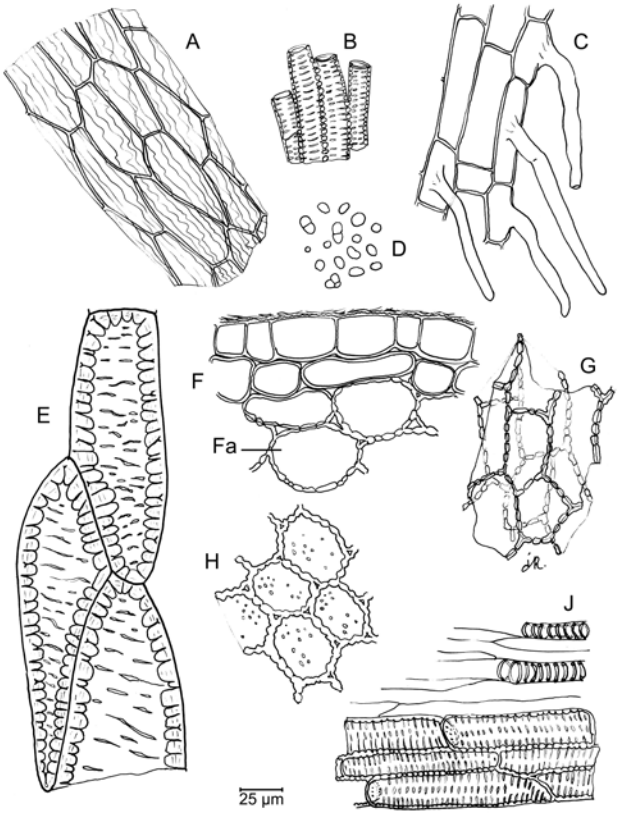

Figure 1364.-1. – *Illustration for identification test B of powdered herbal drug of primula root*

C. Thin-layer chromatography (*2.2.27*) as described in the test for *Vincetoxicum hirundinaria* Medik. root with the following modifications.

Detection: treat with *anisaldehyde solution R*, heat at 100-105 °C for 5-10 min and examine in daylight.

Results: the main zone (aescin) in the chromatogram obtained with the reference solution is bluish-violet and is situated near the boundary between the lower and middle thirds. The chromatogram obtained with the test solution shows 1-2 strong dark violet zones a little below the zone due to aescin in the chromatogram obtained with the reference solution; further pale violet, yellowish or brownish-green zones may be visible.

TESTS

***Vincetoxicum hirundinaria* Medik. root**. Thin-layer chromatography (*2.2.27*).

Test solution. To 1.0 g of the powdered herbal drug (500) (*2.9.12*) add 10 mL of *ethanol (70 per cent V/V) R* and heat under a reflux condenser for 15 min. Cool and filter.

Reference solution. Dissolve 10 mg of *aescin R* in 1.0 mL of *ethanol (70 per cent V/V) R*.

Plate: *TLC silica gel* F_{254} *plate R*.

Mobile phase: *glacial acetic acid R*, *water R*, *butanol R* (10:40:50 *V/V/V*); use the upper layer.

Application: 20 µL as bands.

Development: over a path of 12 cm.

Drying: in an oven at 100-105 °C.

Detection A: examine in ultraviolet light at 254 nm.

Results A: the chromatograms obtained with the reference solution and the test solution show a quenching zone (aescin) near the boundary between the lower and the middle thirds. Mark this zone.

Detection B: examine in ultraviolet light at 365 nm.

Results B: in the chromatogram obtained with the test solution no zones of light-blue or greenish fluorescence occur below the main zone due to aescin in the chromatogram obtained with the reference solution.

Loss on drying (*2.2.32*): maximum 10.0 per cent, determined on 1.000 g of the powdered herbal drug (355) (*2.9.12*) by drying in an oven at 105 °C for 2 h.

Total ash (*2.4.16*): maximum 9.0 per cent.

Ash insoluble in hydrochloric acid (*2.8.1*): maximum 3.0 per cent.

01/2008:0858
corrected 6.0

PSYLLIUM SEED

Psyllii semen

DEFINITION

Ripe, whole, dry seeds of *Plantago afra* L. (*Plantago psyllium* L.) or *Plantago indica* L. (*Plantago arenaria* Waldstein and Kitaibel).

CHARACTERS

Sweet taste.

IDENTIFICATION

P. afra seeds are light brown to very dark brown but never black, smooth and shiny having an elliptical oblong shape. They are 2-3 mm long and 0.8-1.0 mm wide, one end being wider than the other. Towards the middle of the dorsal surface there is a fairly marked transverse constriction of light colour. On the ventral surface, there is a linear lighter-coloured groove in the middle of which is a clear spot corresponding to the hilum and bounded by swollen edges.

P. indica seeds are almost identical to the seeds of *P. afra*, but a little less shiny; they are 2-3 mm long and have a maximum diameter of 1.5 mm.

TESTS

Swelling index (*2.8.4*): minimum 10.

Foreign matter (*2.8.2*): maximum 1.0 per cent, determined on 10.0 g of the drug, including greenish unripe seeds. Psyllium seed does not contain seeds having a dark central spot on the groove (*Plantago lanceolata* L. and *P. major* L.) or seeds with brownish-grey or pinkish outer coats (*P. ovata* Forssk. and *P. sempervirens* Crantz).

Loss on drying (*2.2.32*): maximum 14.0 per cent, determined on 1.000 g of drug by drying in an oven at 105 °C for 2 h.

Total ash (*2.4.16*): maximum 4.0 per cent.

STORAGE

Store protected from moisture.

01/2008:1823
corrected 6.0

PURPLE CONEFLOWER HERB

Echinaceae purpureae herba

DEFINITION

Dried, whole or cut flowering aerial parts of *Echinacea purpurea* (L.) Moench.

Herbal drugs

Content: minimum 0.1 per cent for the sum of caftaric acid ($C_{13}H_{12}O_9$; M_r 312.2) and cichoric acid ($C_{22}H_{18}O_{12}$; M_r 474.3) (dried drug).

IDENTIFICATION

First identification: A, B, C.

Second identification: A, B, D.

A. The herbaceous perennial plant is 60-150 cm, rarely up to 180 cm high. The stem is green to red, upright and slightly branched. The leaves are alternate, ovate to ovate-lanceolate, irregularly serrate, rugose on both surfaces, dark green with prominent light green veins; the lamina is thick and shiny. The involucral bracts of the large capitulum are arranged in 2 or 3 rows. The solid receptacle is slightly convex. Each of the outer violet ligulate florets (4-6 cm) and of the inner violet-pink tubular florets is attached to a reddish acute and coriaceous bract, which overtops the tubular florets. The calyx is reduced to a very short crown, one of the sepals is up to 1 mm long.

B. Reduce to a powder (355) (*2.9.12*). The powder is green. Examine under a microscope using *chloral hydrate solution R*. The powder shows the following diagnostic characters: whitish-green groups of fibres, 150-200 µm in length, 10-15 µm in diameter, sometimes with black deposits; fragments of leaves in surface view showing anomocytic or anisocytic stomata (*2.8.3*) (about 35-40 µm in length); uniseriate covering trichomes or fragments thereof consisting mainly of 3 or 4 thick-walled cells of which the apical cell is markedly longer than the others; fragments of leaves with rosette-like arranged epidermal cells around the base of the covering trichomes; uniseriate glandular trichomes composed of very thin-walled cells; pitted parenchymatous cells from the pith of the stem as well as pitted elongated cells from the mesocarp of the achenes; fragments of parenchyma from the seeds with oil droplets; fragments of the epidermis of ligulate florets composed of red to violet papillous cells; spheroidal pollen grains, 30-40 µm in diameter, with a spiny exine.

C. Thin-layer chromatography (*2.2.27*).

Test solution. To 1.0 g of the powdered herbal drug (355) (*2.9.12*) add 10 mL of *methanol R* and sonicate for 5 min. Centrifuge and use the supernatant solution.

Reference solution. Dissolve 0.5 mg of *caffeic acid R* and 0.5 mg of *chlorogenic acid R* in 5.0 mL of *methanol R*.

Plate: *TLC silica gel plate R* (5-40 µm) [or *TLC silica gel plate R* (2-10 µm)].

Mobile phase: *anhydrous formic acid R*, *water R*, *methyl ethyl ketone R*, *ethyl acetate R* (3:3:9:15 *V/V/V/V*).

Application: 25 µL [or 5 µL] of the test solution and 10 µL [or 2 µL] of the reference solution, as bands.

Development: over a path of 15 cm [or 5 cm].

Drying: in a stream of cold air for about 10 min, then at 100 °C for 2 min.

Detection: spray the still-warm plate with a 5 g/L solution of *diphenylboric acid aminoethyl ester R* in *ethyl acetate R*; after 30 min, examine in ultraviolet light at 365 nm.

Results: see below the sequence of zones present in the chromatograms obtained with the reference solution and the test solution. Furthermore, other faint blue fluorescent zones may be present in the chromatogram obtained with the test solution.

Top of the plate	
	An intense red fluorescent zone
Caffeic acid: a strong blue fluorescent zone	A blue fluorescent zone
———	———
	A blue fluorescent zone
Chlorogenic acid: a strong blue fluorescent zone	
	A faint yellow-orange fluorescent zone
———	———
Reference solution	**Test solution**

D. Examine the chromatograms obtained in the assay. The principal peak in the chromatogram obtained with the test solution is due to cichoric acid and a smaller peak is due to caftaric acid. Peaks due to caffeic acid and chlorogenic acid are minor or may be absent.

TESTS

Loss on drying (*2.2.32*): maximum 10.0 per cent, determined on 1.000 g of the powdered herbal drug (355) (*2.9.12*) by drying in an oven at 105 °C for 2 h.

Total ash (*2.4.16*): maximum 12.0 per cent.

ASSAY

Liquid chromatography (*2.2.29*).

Test solution. In a 100 mL volumetric flask place 0.500 g of the powdered herbal drug (355) (*2.9.12*) and add 80 mL of *ethanol (70 per cent V/V) R*. Sonicate for 15 min and dilute to 100.0 mL with *ethanol (70 per cent V/V) R*. Mix the suspension and allow to stand for a few minutes to allow visible solids to settle.

Reference solution. Dissolve 10.0 mg of *chlorogenic acid CRS* and 10.0 mg of *caffeic acid R* in *ethanol (70 per cent V/V) R*, sonicate for 15 min and dilute to 10.0 mL with the same solvent. Dilute 4.0 mL of this solution to 100.0 mL with *ethanol (70 per cent V/V) R*.

Column:

- *size*: *l* = 0.25 m, Ø = 4.6 mm;
- *stationary phase*: *octadecylsilyl silica gel for chromatography R* (5 µm);
- *temperature*: 35 °C.

Mobile phase:

- *mobile phase A*: *phosphoric acid R*, *water R* (1:999 *V/V*);
- *mobile phase B*: *acetonitrile R*;

Time (min)	Mobile phase A (per cent *V/V*)	Mobile phase B (per cent *V/V*)
0	90	10
0 - 13	90 → 78	10 → 22
13 - 14	78 → 60	22 → 40
14 - 20	60	40

Flow rate: 1.5 mL/min.

Detection: spectrophotometer at 330 nm.

Injection: 10 µL.

Relative retention with reference to chlorogenic acid (retention time = about 7 min): caftaric acid = about 0.8; caffeic acid = about 1.5; cynarin = about 1.6; echinacoside = about 1.7; cichoric acid = about 2.3.

System suitability: reference solution:

- *resolution*: minimum 5 between the peaks due to caffeic acid and chlorogenic acid.

Herbal drugs

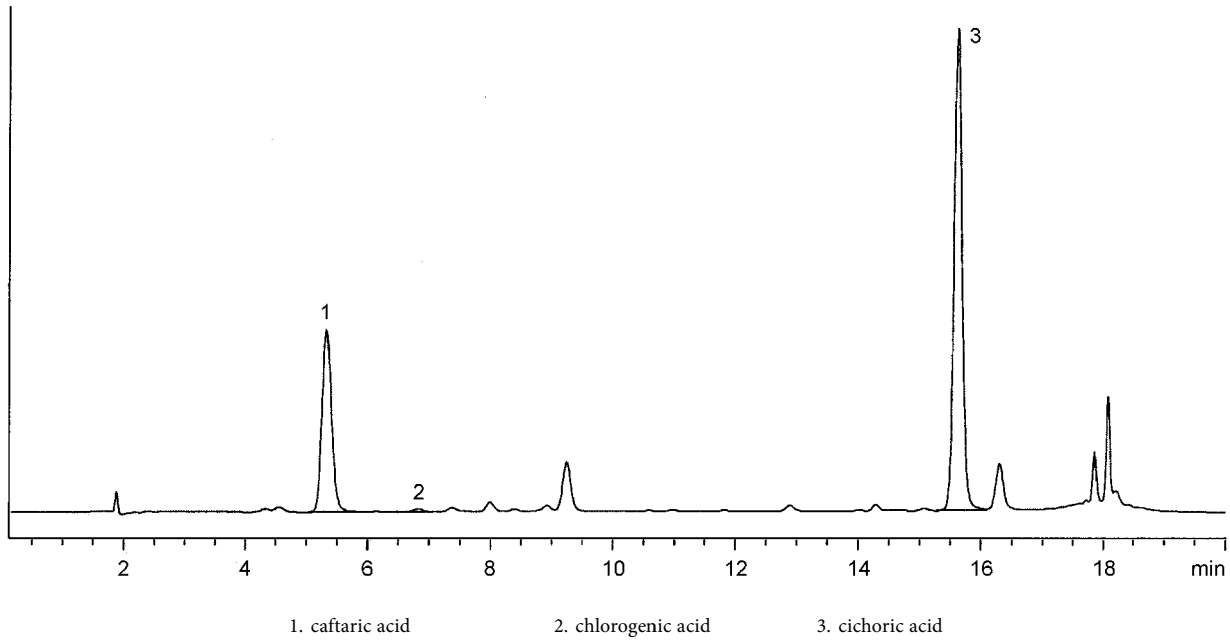

Figure 1823.-1. – *Chromatogram for the assay of caftaric acid and cichoric acid in purple coneflower herb*

Locate the peaks due to caffeic acid and chlorogenic acid using the chromatogram obtained with the reference solution. Locate the peaks due to caftaric acid and cichoric acid using the chromatogram in Figure 1823.-1.

Calculate the percentage content of caftaric acid using the following expression:

$$\frac{A_1 \times C_2 \times 100 \times 0.881}{A_2 \times C_1}$$

Calculate the percentage content of cichoric acid using the following expression:

$$\frac{A_3 \times C_2 \times 100 \times 0.695}{A_2 \times C_1}$$

A_1 = area of the peak due to caftaric acid in the chromatogram obtained with the test solution;

A_2 = area of the peak due to chlorogenic acid in the chromatogram obtained with the reference solution;

A_3 = area of the peak due to cichoric acid in the chromatogram obtained with the test solution;

C_1 = concentration of the test solution, in milligrams per millilitre;

C_2 = concentration of chlorogenic acid in the reference solution, in milligrams per millilitre;

0.695 = peak correlation factor based upon the liquid chromatography response observed;

0.881 = peak correlation factor between caftaric acid and chlorogenic acid.

STORAGE

Uncomminuted.

01/2008:1824
corrected 6.0

PURPLE CONEFLOWER ROOT

Echinaceae purpureae radix

DEFINITION

Dried, whole or cut underground parts of *Echinacea purpurea* (L.) Moench.

Content: minimum 0.5 per cent for the sum of caftaric acid ($C_{13}H_{12}O_9$; M_r 312.2) and cichoric acid ($C_{22}H_{18}O_{12}$; M_r 474.3) (dried drug).

IDENTIFICATION

First identification: A, B, C, E.

Second identification: A, B, D, E.

A. The rhizome is up to 15 cm long, branched, reddish-brown to dark brown on the surface and carries many stem bases; the inside is fibrous and white. The numerous roots are spirally twisted, light to dark brown and show a fine cross structuring on the surface.

B. Reduce to a powder (355) (*2.9.12*). The powder is light yellow to pinkish-beige. Examine under a microscope using *chloral hydrate solution R*. The powder shows the following diagnostic characters: numerous light-brown spindle-shaped fibres that are joined together in long bundles without black deposits; rare sclereids from the rhizomes and roots, usually occuring singly, those from the rhizomes being isodiametric, about 60 µm in diameter, with black deposits, those from the roots being 50-120 µm in length with no black deposits; secretory cavities up to 180 µm in diameter with yellow oil droplets; squarish to rectangular cells of the outer layers, some with reddish walls; bordered-pitted vessels from the rhizome, 30-40 µm in diameter.

C. Examine the chromatogram obtained in the test for other *Echinacea* species and *Parthenium integrifolium*.

Results: see below the sequence of zones present in the chromatograms obtained with the reference solution and the test solution. Furthermore, faint greenish fluorescent zones may be present just below the zone situated in the middle of the chromatogram obtained with the test solution.

Herbal drugs

Top of the plate	
Caffeic acid: a strong blue fluorescent zone	A strong blue fluorescent zone
———	———
Cynarin: a strong greenish fluorescent zone	
	A blue fluorescent zone
———	———
Echinacoside: a strong greenish fluorescent zone	
Reference solution	**Test solution**

D. Examine the chromatograms obtained in the assay. The principal peak in the chromatogram obtained with the test solution is due to cichoric acid and a smaller peak is due to caftaric acid. Peaks due to caffeic acid and chlorogenic acid are minor or may be absent.

E. Thin-layer chromatography (*2.2.27*).

Test solution. To 1.0 g of the powdered herbal drug (355) (*2.9.12*) add 10 mL of *methylene chloride R* and sonicate for 5 min. Centrifuge and use the supernatant solution.

Reference solution. Dissolve 1 mg of *β-sitosterol R* and a volume of *N-isobutyldodecatetraenamide solution R* corresponding to 1 mg of *N-isobutyldodecatetraenamide R* in 5.0 mL of *methanol R*.

Plate: *TLC silica gel plate R* (5-40 µm) [or *TLC silica gel plate R* (2-10 µm)].

Mobile phase: *anhydrous formic acid R*, *cyclohexane R*, *ethyl acetate R*, *toluene R* (0.9:3:6:24 *V/V/V/V*).

Application: 25 µL [or 5 µL], as bands.

Development: over a path of about 15 cm [or 5 cm].

Drying: in a stream of cold air for about 10 min.

Detection: dip the plate into *anisaldehyde solution R* for 1 s and heat at 100-105 °C for 3 min; examine in daylight.

Results: see below the sequence of zones present in the chromatograms obtained with the reference solution and the test solution. Furthermore, other faint zones may be present in the chromatogram obtained with the test solution.

Top of the plate	
———	———
	A bluish-violet zone
β-Sitosterol: a violet or pink zone	A violet or pink zone (β-sitosterol)
N-Isobutyldodecatetraenamide: a greyish-blue zone	A greyish-blue zone (*N*-isobutyldodecatetraenamide)
———	———
	A dark greyish-blue zone
Reference solution	**Test solution**

TESTS

Other *Echinacea* species and *Parthenium integrifolium*. Thin-layer chromatography (*2.2.27*).

Test solution. To 1.0 g of the powdered herbal drug (355) (*2.9.12*) add 10 mL of *methanol R* and sonicate for 5 min. Centrifuge and use the supernatant solution.

Reference solution. Dissolve 1 mg of *echinacoside R*, 1 mg of *cynarin R* and 0.5 mg of *caffeic acid R* in 5.0 mL of *methanol R*.

Plate: *TLC silica gel plate R* (5-40 µm) [or *TLC silica gel plate R* (2-10 µm)].

Mobile phase: *anhydrous formic acid R*, *water R*, *methyl ethyl ketone R*, *ethyl acetate R* (3:3:9:15 *V/V/V/V*).

Application: 10 µL [or 5 µL] of the test solution and 5 µL [or 2 µL] of the reference solution, as bands.

Development: over a path of 10 cm [or 5 cm].

Drying: in a stream of cold air for about 10 min, then at 105 °C for 2 min.

Detection: spray the still-warm plate with a 5 g/L solution of *diphenylboric acid aminoethyl ester R* in *ethyl acetate R*; after 30 min, examine in ultraviolet light at 365 nm.

Results: the chromatogram obtained with the test solution shows no greenish fluorescent zone corresponding to the zone due to echinacoside in the chromatogram obtained with the reference solution, and no greenish fluorescent zone corresponding to the zone due to cynarin in the chromatogram obtained with the reference solution. No other zones apart from very faint dark blue fluorescent zones are seen in the lower half of the chromatogram of the test solution.

Foreign matter (*2.8.2*): maximum 3 per cent.

Loss on drying (*2.2.32*): maximum 10.0 per cent, determined on 1.000 g of the powdered herbal drug (355) (*2.9.12*) by drying in an oven at 105 °C for 2 h.

Total ash (*2.4.16*): maximum 9.0 per cent.

Ash insoluble in hydrochloric acid (*2.8.1*): maximum 2.0 per cent.

ASSAY

Liquid chromatography (*2.2.29*).

Test solution. In a 100 mL volumetric flask place 0.500 g of the powdered herbal drug (355) (*2.9.12*) and add 80 mL of *ethanol (70 per cent V/V) R*. Sonicate for 15 min and dilute to 100.0 mL with *ethanol (70 per cent V/V) R*. Mix the suspension and allow to stand for a few minutes to allow visible solids to settle.

Reference solution. Dissolve 10.0 mg of *chlorogenic acid CRS* and 10.0 mg of *caffeic acid R* in *ethanol (70 per cent V/V) R*, sonicate for 15 min and dilute to 10.0 mL with the same solvent. Dilute 4.0 mL of this solution to 100.0 mL with *ethanol (70 per cent V/V) R*.

Column:

- *size*: *l* = 0.25 m, Ø = 4.6 mm;
- *stationary phase*: *octadecylsilyl silica gel for chromatography R* (5 µm);
- *temperature*: 35 °C.

Mobile phase:

- *mobile phase A*: *phosphoric acid R*, *water R* (1:999 *V/V*);
- *mobile phase B*: *acetonitrile R*;

Time (min)	Mobile phase A (per cent *V/V*)	Mobile phase B (per cent *V/V*)
0	90	10
0 - 13	90 → 78	10 → 22
13 - 14	78 → 60	22 → 40
14 - 20	60	40

Flow rate: 1.5 mL/min.

Detection: spectrophotometer at 330 nm.

Injection: 10 µL.

Relative retention with reference to chlorogenic acid (retention time = about 7 min): caftaric acid = about 0.8; caffeic acid = about 1.5; cynarin = about 1.6; echinacoside = about 1.7; cichoric acid = about 2.3.

System suitability: reference solution:

- *resolution*: minimum 5 between the peaks due to caffeic acid and chlorogenic acid.

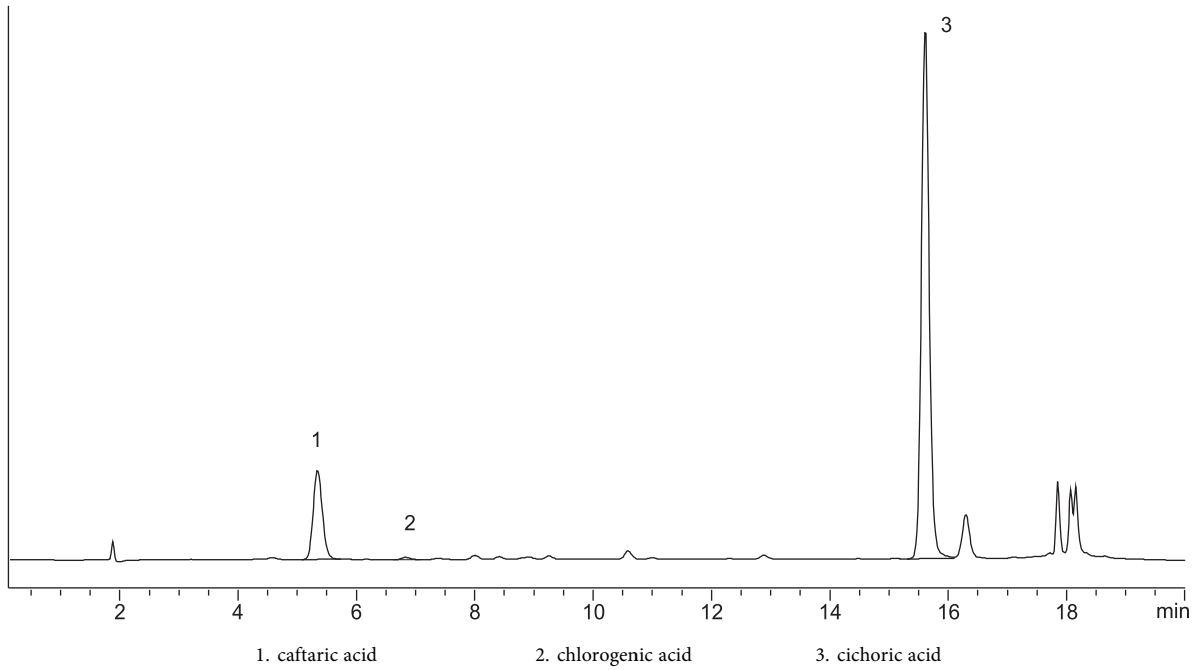

Figure 1824.-1. – *Chromatogram for the assay of caftaric acid and cichoric acid in purple coneflower root*

Locate the peaks due to caffeic acid and chlorogenic acid using the chromatogram obtained with the reference solution. Locate the peaks due to caftaric acid and cichoric acid using the chromatogram in Figure 1824.-1.

Calculate the percentage content of caftaric acid using the following expression:

$$\frac{A_1 \times C_2 \times 100 \times 0.881}{A_2 \times C_1}$$

Calculate the percentage content of cichoric acid using the following expression:

$$\frac{A_3 \times C_2 \times 100 \times 0.695}{A_2 \times C_1}$$

A_1 = area of the peak due to caftaric acid in the chromatogram obtained with the test solution;

A_2 = area of the peak due to chlorogenic acid in the chromatogram obtained with the reference solution;

A_3 = area of the peak due to cichoric acid in the chromatogram obtained with the test solution;

C_1 = concentration of the dried drug in the test solution, in milligrams per millilitre;

C_2 = concentration of chlorogenic acid in the reference solution, in milligrams per millilitre;

0.695 = peak correlation factor based upon the liquid chromatography response observed;

0.881 = peak correlation factor between caftaric acid and chlorogenic acid.

STORAGE

Uncomminuted.

01/2008:1886
corrected 6.0

PYGEUM AFRICANUM BARK

Pruni africanae cortex

DEFINITION

Whole or cut, dried bark of the stems and branches of *Prunus africana* (Hook f.) Kalkm. (syn. *Pygeum africanum* Hook f.).

IDENTIFICATION

A. The dark brown to reddish-brown bark occurs in curved, hard, irregular pieces. The outer surface has a wrinkled dark reddish-brown cork with areas of adhering lichen. The reddish-brown to dark brown inner surface bears longitudinal striations. It may also occur in rolled fragments with a fibrous fracture.

B. Reduce to a powder (355) (*2.9.12*). The powder is reddish-brown. Examine under a microscope using *chloral hydrate solution R*. The powdered herbal drug shows thick-walled sclereids, solitary or in groups; calcium oxalate cluster crystals of different size; numerous lignified fibres, thick-walled and with narrow lumen, some of them solitary and most in groups with forked ends; fragments of pigmented polygonal cells of reddish-brown colour; fragments of cork. Examine under a microscope using a 50 per cent *V/V* solution of *glycerol R*, the powder shows some isolated small starch grains that stain bluish-black against *iodine solution R1*.

C. Thin-layer chromatography (*2.2.27*).

Test solution. Extract 15.0 g of the powdered herbal drug (250) (*2.9.12*) with *methylene chloride R* for 30 min in a continuous extraction apparatus (Soxhlet type). Filter. Evaporate the solvent to dryness under reduced pressure. Dissolve the residue in 1 mL of *methylene chloride R*.

Reference solution. Dissolve 20 mg of *β-sitosterol R* and 20 mg of *ursolic acid R* in 10 mL of a mixture of equal volumes of *methanol R* and *methylene chloride R*.

Plate: *TLC silica gel plate R*.

Mobile phase: *methanol R*, *methylene chloride R* (10:90 *V/V*).

Application: 10 µL, as 1 cm bands.

Development: over a path of 15 cm.

Drying: in air.

Herbal drugs

Detection: spray with *vanillin reagent R*. Heat the plate at 100-105 °C for 10 min and allow to cool; examine in daylight.

Results: see below the sequence of the zones present in the chromatograms obtained with the reference solution and the test solution. Furthermore, other zones may be present in the chromatogram obtained with the test solution.

Top of the plate	
	A violet zone Several weak violet, blue or grey zones
———	———
β-Sitosterol: a violet zone Ursolic acid: a blue zone	A violet zone (β-sitosterol) A blue zone (ursolic acid) Several weak violet, blue or grey zones
———	———
	A violet zone (β-sitosterol glucoside)
Reference solution	**Test solution**

TESTS

Foreign matter (*2.8.2*): maximum 3.0 per cent.

Loss on drying (*2.2.32*): maximum 12.0 per cent, determined on 1.000 g of the powdered herbal drug (355) (*2.9.12*) by drying in an oven at 105 °C for 2 h.

Total ash (*2.4.16*): maximum 10.0 per cent.

Extractable matter: minimum 0.5 per cent.

Extract 20.0 g of the powdered herbal drug (250) (*2.9.12*) with *methylene chloride R* for 4 h in a continuous extraction apparatus (Soxhlet type). Evaporate the solution to dryness on a water-bath *in vacuo* and then dry the residue at 80 °C for 2 h. The residue weighs a minimum of 0.10 g.

04/2013:1843

QUILLAIA BARK

Quillajae cortex

DEFINITION

Whole or fragmented, dried bark, with the cork and underlying parenchyma removed, of *Quillaja saponaria* Molina *s.l.*

Content: minimum 6.5 per cent of triterpene glycosides, expressed as quillaia saponin III ($C_{104}H_{168}O_{55}$; M_r 2298) (dried drug).

IDENTIFICATION

A. Large, flat pieces of variable length and width, 3-10 mm thick, or smaller, splintered pieces. The outer surface is brownish-white or pale reddish-brown, longitudinally striated or coarsely reticulated, with occasional blackish-brown patches of incompletely removed outer bark. The inner surface is yellowish-white and smooth. The fracture is splintery and laminated, the surface often glistening due to the presence of numerous large prisms of calcium oxalate.

B. Microscopic examination (*2.8.23*). The powder is pale pinkish-yellow. Examine under a microscope using *chloral hydrate solution R*. The powder shows the following diagnostic characters (Figure 1843.-1): abundant phloem fibres [E, F], up to 1 mm long, isolated or, more usually, in groups, each fibre irregular in outline with lignified walls of varying thickness and an uneven lumen; numerous, multiseriate medullary rays, spindle-shaped in tangential section [Ca, Fb], accompanied by either phloem fibres [Fa] or phloem parenchyma [Cb]; very numerous prisms of calcium oxalate, up to 200 µm long, free, whole or, more usually, fragmented [A] or included in phloem parenchyma cells [Cc, Cd]; occasional sclereids of 2 types: the 1st type is sub-rectangular with pitted, slightly thickened walls, isolated [G] or included in phloem parenchyma cells [H], while the 2nd type has an irregularly shaped outline and very thick walls [J], sometimes adjacent to the bundles of phloem fibres; occasional dark brown or reddish-brown fragments of cork [D]. Examine under a microscope using a 50 per cent *V/V* solution of *glycerol R*. The powder shows numerous, small (5-20 µm), mainly simple, spherical starch granules, either scattered or as compacted masses in parenchyma cells [B].

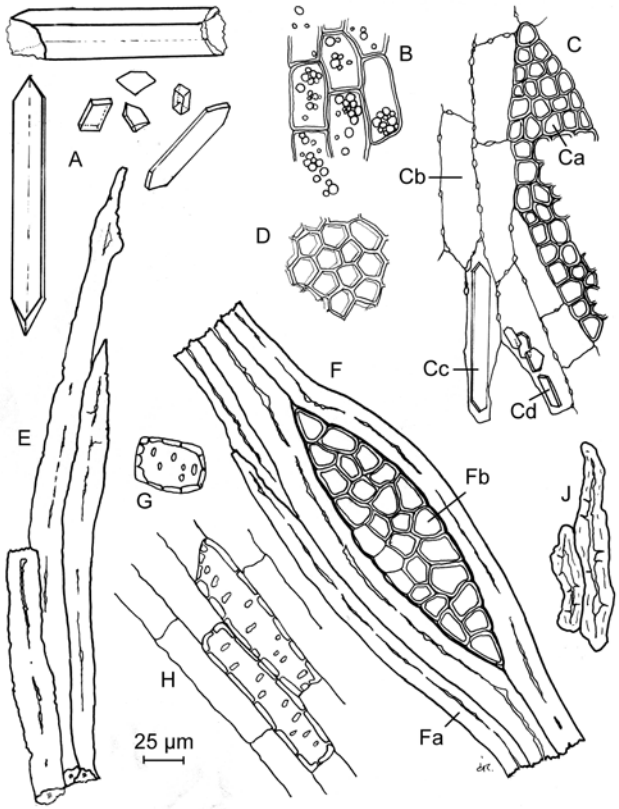

Figure 1843.-1. – *Illustration for identification test B of powdered herbal drug of quillaia bark*

C. Thin-layer chromatography (*2.2.27*).

Test solution. To 1.0 g of the powdered herbal drug (355) (*2.9.12*) add 5 mL of *methanol R* and 5 mL of *water R*. Sonicate for 10 min and filter.

Reference solution. Dissolve 10 mg of *purified quillaia saponins R* and 2 mg of *sucrose R* in 1 mL of *water R* and mix with 1 mL of *methanol R*.

Plate: *TLC silica gel plate R* (2-10 µm).

Mobile phase: *anhydrous acetic acid R*, *ethyl acetate R*, *water R*, *propanol R* (1.5:30:30:40 *V/V/V/V*).

Application: 5 µL as bands of 6 mm.

Development: over a path of 6 cm.

Drying: in hot air.

Detection: treat with a 10 per cent *V/V* solution of *sulfuric acid R* in *methanol R*; heat at 120 °C for 5 min and examine in daylight.

Results: see below the sequence of zones present in the chromatograms obtained with the reference solution and the test solution. Furthermore, other faint zones may be present in the chromatogram obtained with the test solution.

Top of the plate	
———	———
Quillaia saponins: 3 or more green or brown zones	3 or more green or brown zones (quillaia saponins)
	A blue zone
Sucrose: a brown or blue zone	A brown or blue zone (sucrose)
———	———
Reference solution	**Test solution**

TESTS

Loss on drying (*2.2.32*): maximum 10.0 per cent, determined on 1.000 g of the powdered herbal drug (355) (*2.9.12*) by drying in an oven at 105 °C for 2 h.

Total ash (*2.4.16*): maximum 10.0 per cent.

Ash insoluble in hydrochloric acid (*2.8.1*): maximum 1.0 per cent.

ASSAY

Liquid chromatography (*2.2.29*).

Test solution. Introduce 0.500 g of the powdered herbal drug (355) (*2.9.12*) into a round-bottomed flask, add 20 mL of a 20 g/L solution of *potassium hydroxide R* and heat under a reflux condenser in a water-bath for 2 h. After cooling, add 2 mL of *phosphoric acid R* and filter through a plug of absorbent cotton. Add the absorbent cotton to the residue, add 25 mL of *ethanol (96 per cent) R* and shake thoroughly. Filter. Combine the filtrates and dilute to 50.0 mL with *water R*. Filter through a membrane filter (nominal pore size 0.45 µm).

Reference solution (a). Dissolve 12.0 mg of *quillaia saponin for assay CRS* (containing monoammonium glycyrrhizate) in a mixture of equal volumes of *ethanol (96 per cent) R* and a 10 g/L solution of *phosphoric acid R*, and dilute to 50.0 mL with the same mixture of solvents.

Reference solution (b). Introduce 12 mg of *purified quillaia saponins HRS* into a 50 mL round-bottomed flask, add 20 mL of a 20 g/L solution of *potassium hydroxide R* and heat under a reflux condenser in a water-bath for 2 h. After cooling, add 2 mL of *phosphoric acid R*. Add 25 mL of *ethanol (96 per cent) R* and shake thoroughly. Dilute to 50.0 mL with *water R*. Filter through a membrane filter (nominal pore size 0.45 µm).

Column:

- *size*: *l* = 0.25 m, Ø = 4.6 mm;
- *stationary phase*: *octadecylsilyl silica gel for chromatography R* (5 µm);
- *temperature*: 30 ± 2 °C.

Mobile phase: *acetonitrile R1*, 1 g/L solution of *phosphoric acid R* (35:65 *V/V*).

Flow rate: 1.0 mL/min.

Detection: spectrophotometer at 210 nm.

Injection: 50 µL.

Run time: 1.2 times the retention time of glycyrrhizic acid.

Identification of peaks: use the chromatogram supplied with *purified quillaia saponins HRS* and the chromatogram obtained with reference solution (b) to identify the peaks due to monodesmosidic quillaia saponins 1 and 3; a minor peak due to monodesmosidic quillaia saponin 2 may be present between the peaks due to monodesmosidic quillaia saponins 1 and 3.

Retention time: monodesmosidic quillaia saponin 1 = about 9 min; monodesmosidic quillaia saponin 3 = about 10 min; glycyrrhizic acid = about 13 min.

Calculate the percentage content of triterpene glycosides, expressed as quillaia saponin III, using the following expression:

$$\frac{A_1 \times m_2 \times p \times 2298 \times 0.6}{A_2 \times m_1 \times 957}$$

A_1 = sum of the areas of the peaks due to monodesmosidic quillaia saponins (1, 2 and 3) in the chromatogram obtained with the test solution;

A_2 = area of the peak due to glycyrrhizic acid derived from monoammonium glycyrrhizate in the chromatogram obtained with reference solution (a);

m_1 = mass of the herbal drug to be examined used to prepare the test solution, in grams;

m_2 = mass of *quillaia saponin for assay CRS* used to prepare reference solution (a), in grams;

p = percentage content of monoammonium glycyrrhizate in *quillaia saponin for assay CRS*;

0.6 = response factor between monoammonium glycyrrhizate and monodesmosidic quillaia saponin 3;

2298 = molecular mass of quillaia saponin III;

957 = molecular mass of monodesmosidic quillaia saponin 3.

01/2011:1881

RED POPPY PETALS

Papaveris rhoeados flos

DEFINITION

Dried, whole or fragmented petals of *Papaver rhoeas* L.

IDENTIFICATION

A. The petal is dark red or dark violet-brown, very thin, floppy, wrinkled, often crumpled into a ball and velvety to the touch. It is broadly ovate with an entire margin, about 6 cm long and 4-6 cm wide, narrowing at the base where there is a black spot. The vascular bundles radiate from the base and they anastomose in a continuous arc, all at the same short distance from the margin.

B. Reduce to a powder (355) (*2.9.12*). Examine under a microscope using *chloral hydrate solution R*. The powder has an intense reddish-pink colour and shows the following diagnostic characters (Figure 1881.-1): fragments of epidermis composed of elongated, sinuous-walled cells [B, D, G] with small, rounded, anomocytic stomata (*2.8.3*) [Ba]; numerous vascular bundles with spiral vessels [E] embedded in the parenchyma; occasional fragments of the fibrous layer of the anthers [F]; rounded pollen grains, about 30 µm in diameter, with 3 pores and a finely verrucose exine [A, C, H].

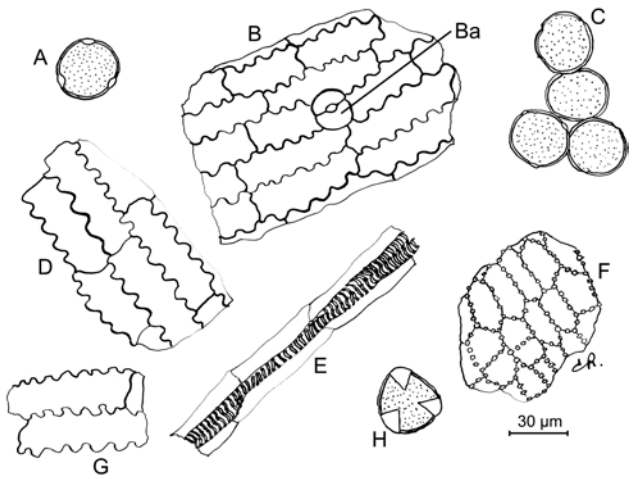

Figure 1881.-1. – *Illustration for identification test B of powdered herbal drug of red poppy petals*

C. Thin-layer chromatography (*2.2.27*).

Test solution. To 1.0 g of the powdered herbal drug (355) (*2.9.12*) add 10 mL of *ethanol (60 per cent V/V) R*. Stir for 15 min. Filter through a filter paper.

Reference solution. Dissolve 1 mg of *quinaldine red R* and 1 mg of *sulfan blue R* in 2 mL of *methanol R*.

Plate: *TLC silica gel plate R*.

Mobile phase: *anhydrous formic acid R*, *water R*, *butanol R* (10:12:40 *V/V/V*).

Application: 10 µL as bands.

Development: over a path of 10 cm.

Drying: in air.

Detection: examine in daylight.

Results: see below the sequence of zones present in the chromatograms obtained with the reference solution and the test solution. Furthermore, other zones may be present in the chromatogram obtained with the test solution.

Top of the plate	
Quinaldine red: an orange-red zone ——— Sulfan blue: a blue zone ———	2 yellow zones ——— A violet principal zone A violet zone A yellow zone ——— A compact group of violet zones
Reference solution	**Test solution**

TESTS

Foreign matter (*2.8.2*): maximum 2.0 per cent of capsules and maximum 1.0 per cent of other foreign matter.

Loss on drying (*2.2.32*): maximum 12.0 per cent, determined on 1.000 g of the powdered herbal drug (355) (*2.9.12*) by drying in an oven at 105 °C for 2 h.

Total ash (*2.4.16*): maximum 11.0 per cent.

Colouring intensity. Place 1.0 g of the powdered herbal drug (355) (*2.9.12*) in a 250 mL flask and add 100 mL of *ethanol (30 per cent V/V) R*. Allow to macerate for 4 h with frequent stirring. Filter and discard the first 10 mL. To 10.0 mL of the filtrate add 2 mL of *hydrochloric acid R* and dilute to 100.0 mL with *ethanol (30 per cent V/V) R*. Allow to stand for 10 min. The absorbance (*2.2.25*) measured at 523 nm using *ethanol (30 per cent V/V) R* as the compensation liquid is not less than 0.6.

01/2008:1879
corrected 6.0

RESTHARROW ROOT

Ononidis radix

DEFINITION

Whole or cut, dried root of *Ononis spinosa* L.

IDENTIFICATION

A. The root is more or less flattened, twisted and branched, deeply wrinkled, brown and grooved longitudinally. The transversely cut surface shows a thin bark and a xylem cylinder with a conspicuously radiate structure. The fracture of the root is short and fibrous.

B. Reduce to a powder (355) (*2.9.12*). The powder is light brown or brown. Examine under a microscope using *chloral hydrate solution R*. The powder shows the following diagnostic characters: brown fragments of cork composed of thin-walled polygonal cells; groups of thick-walled narrow fibres, often accompanied by a parenchymatous crystal sheath containing prisms of calcium oxalate; fragments of vessels with numerous small bordered pits; parenchymatous cells with single prisms of calcium oxalate. Examine under a microscope using a mixture of equal volumes of *glycerol R* and *water R*. The powder shows numerous simple, round starch granules, 5-10 µm in diameter.

C. Thin-layer chromatography (*2.2.27*).

Test solution. To 1.0 g of the powdered herbal drug (180) (*2.9.12*) add 15.0 mL of *methanol R* and boil under a reflux condenser for 30 min. Cool and filter.

Reference solution. Dissolve 10 mg of *resorcinol R* and 50 mg of *vanillin R* in 10 mL of *methanol R*.

Plate: *TLC silica gel F_{254} plate R*.

Mobile phase: *ethanol (96 per cent) R*, *methylene chloride R*, *toluene R* (10:45:45 *V/V/V*).

Application: 20 µL, as bands.

Development: over a path of 15 cm.

Drying: in air.

Detection A: examine in ultraviolet light at 254 nm and 365 nm.

Results A: see below the sequence of the zones present in the chromatograms obtained with the reference solution and the test solution. Furthermore, other fluorescent zones are present in the middle third of the chromatogram obtained with the test solution.

Top of the plate	
Vanillin: a zone visible at 254 nm ——— Resorcinol: a zone visible at 254 nm ———	——— An intense blue fluorescent zone visible at 365 nm ———
Reference solution	**Test solution**

Detection B: spray with *anisaldehyde solution R*. Heat at 100-105 °C for 5-10 min. Examine in daylight.

Results B: see below the sequence of the zones present in the chromatograms obtained with the reference solution and the test solution.

Top of the plate	
Vanillin: a greyish-violet zone Resorcinol: a red zone	A violet zone (onocol)
Reference solution	**Test solution**

TESTS

Loss on drying (*2.2.32*): maximum 10.0 per cent, determined on 1.000 g of the powdered herbal drug (355) (*2.9.12*) by drying in an oven at 105 °C for 2 h.

Total ash (*2.4.16*): maximum 8.0 per cent.

Extractable matter: minimum 15.0 per cent.

To 2.00 g of the powdered herbal drug (250) (*2.9.12*) add a mixture of 8 g of *water R* and 12 g of *ethanol (96 per cent) R* and allow to macerate for 2 h, shaking frequently. Filter, evaporate 5 g of the filtrate to dryness on a water-bath and dry in an oven at 100-105 °C for 2 h. The residue weighs a minimum of 75 mg.

01/2008:0289
corrected 6.0

RHATANY ROOT

Ratanhiae radix

DEFINITION

Dried, usually fragmented, underground organs of *Krameria triandra* Ruiz and Pavon, known as Peruvian rhatany.

Content: minimum 5.0 per cent of tannins, expressed as pyrogallol ($C_6H_6O_3$; M_r 126.1) (dried drug).

IDENTIFICATION

A. The taproot is dark reddish-brown and has a thick, knotty crown. The secondary roots are the same colour and nearly straight or somewhat tortuous. The bark is rugged or scaly in the older pieces and smooth with sharp, transverse fissures in the younger pieces; it separates readily from the wood. The fracture is fibrous in the bark and splintery in the wood. The smooth, transversely cut surface shows a dark brownish-red bark about one third of the radius in thickness; a dense, pale reddish-brown and finely porous wood is present with numerous fine medullary rays; the central heartwood is often darker.

B. Reduce to a powder (355) (*2.9.12*). The powder is brownish-red. Examine under a microscope using *chloral hydrate solution R*. The powder shows the following diagnostic characters: cork cells containing dark brown phlobaphenes; fragments of unlignified phloem fibres, usually 12-30 µm in diameter with moderately thick walls; phloem parenchyma cells in files containing prisms and microcrystals of calcium oxalate; fragments of vessels usually 20-60 µm in diameter with bordered pits; fragments of tracheids up to 20 µm wide with slit-shaped pits. Examine under a microscope using a 50 per cent *V/V* solution of *glycerol R*. The powder shows rounded starch granules, simple or 2- to 4-compound, an individual granule measuring up to 30 µm in diameter and some granules being found in the cells of the medullary rays and in the parenchyma.

C. Thin-layer chromatography (*2.2.27*).

Test solution. To 1.0 g of the powdered herbal drug (355) (*2.9.12*) add 10 mL of a mixture of 3 volumes of *water R* and 7 volumes of *ethanol (96 per cent) R*, shake for 10 min and filter. To the filtrate add 10 mL of *light petroleum R* and shake. Separate the light petroleum layer, add 2 g of *anhydrous sodium sulfate R*, shake and filter. Evaporate the filtrate to dryness. Dissolve the residue in 0.5 mL of *methanol R*.

Reference solution. Dissolve 5.0 mg of *Sudan red G R* in 10 mL of *methanol R*.

Plate: *TLC silica gel plate R*.

Mobile phase: *ethyl acetate R*, *toluene R* (2:98 *V/V*).

Application: 10 µL, as bands.

Development: over a path of 15 cm.

Drying: in air.

Detection: spray with a 5 g/L solution of *fast blue B salt R*. Allow to dry in air and spray with *0.1 M ethanolic sodium hydroxide*; examine in daylight.

Results: the chromatogram obtained with the reference solution shows in the lower third a red zone due to Sudan red G. The chromatogram obtained with the test solution shows a violet zone due to rhatany phenol I similar in position to the zone of Sudan red G in the chromatogram obtained with the reference solution, below it the brownish zone due to rhatany phenol II and below this the bluish-grey zone due to rhatany phenol III. Further zones may be present.

TESTS

Foreign matter (*2.8.2*): maximum 2 per cent of foreign matter and maximum 5 per cent of fragments of crown or root exceeding 25 mm in diameter. Root without bark may be present in very small quantities.

Loss on drying (*2.2.32*): maximum 12.0 per cent, determined on 1.000 g of the powdered herbal drug (355) (*2.9.12*) by drying in an oven at 105 °C.

Total ash (*2.4.16*): maximum 5.5 per cent.

ASSAY

Tannins (*2.8.14*). Use 0.750 g of the powdered herbal drug (180) (*2.9.12*).

01/2008:1888

RHATANY TINCTURE

Ratanhiae tinctura

DEFINITION

Tincture produced from *Rhatany root (0289)*.

Content: minimum 1.0 per cent *m/m* of tannins, expressed as pyrogallol ($C_6H_6O_3$; M_r 126.1).

PRODUCTION

The tincture is produced from 1 part of the drug and 5 parts of ethanol (70 per cent *V/V*) by a suitable procedure.

CHARACTERS

Appearance: reddish-brown liquid.

IDENTIFICATION

Thin-layer chromatography (*2.2.27*).

Test solution. To 5 mL of the tincture to be examined, add 10 mL of *light petroleum R* and shake. Separate the light petroleum layer, add 2 g of *anhydrous sodium sulfate R*, shake and filter. Evaporate the filtrate to dryness. Dissolve the residue in 0.5 mL of *methylene chloride R*.

Reference solution. Dissolve 5 mg of *thymol R* and 10 mg of *dichlorophenolindophenol, sodium salt R* in 10 mL of *alcohol (60 per cent V/V) R*.

Plate: *TLC silica gel plate R*.

Mobile phase: *methylene chloride R*.

Application: 10 µL, as bands.

Development: over a path of 10 cm.

Drying: in air.

Detection: spray with a 5 g/L solution of *fast blue B salt R*; allow the plate to dry in air and spray with *0.1 M ethanolic sodium hydroxide*; examine in daylight.

Results: see below the sequence of the zones present in the chromatograms obtained with the reference solution and the test solution. Furthermore, other zones may be present in the chromatogram obtained with the test solution.

Top of the plate	
Thymol: an orange brownish-yellow zone	A violet zone
	A greenish-grey zone
	A bluish-grey zone
	A yellowish-brown zone
Dichlorophenolindophenol: a greyish-blue zone	A violet zone
Reference solution	**Test solution**

TESTS

Ethanol (*2.9.10*): 63 per cent *V/V* to 67 per cent *V/V*.

Methanol and 2-propanol (*2.9.11*): maximum 0.05 per cent *V/V* of methanol and maximum 0.05 per cent *V/V* of 2-propanol.

ASSAY

Tannins (*2.8.14*). Use 2.500 g of the tincture to be examined.

01/2008:0291
corrected 6.0

RHUBARB

Rhei radix

DEFINITION

Rhubarb consists of the whole or cut, dried underground parts of *Rheum palmatum* L. or of *Rheum officinale* Baillon or of hybrids of these two species or of a mixture. The underground parts are often divided; the stem and most of the bark with the rootlets are removed. It contains not less than 2.2 per cent of hydroxyanthracene derivatives, expressed as rhein ($C_{15}H_8O_6$, M_r 284.2), calculated with reference to the dried drug.

CHARACTERS

Characteristic, aromatic odour.

IDENTIFICATION

A. The appearance is variable: disc-shaped pieces up to 10 cm in diameter and 1 cm to 5 cm in thickness; cylindrical pieces; oval or planoconvex pieces. The surface has a pinkish tinge and is usually covered with a layer of brownish-yellow powder. It shows, especially after moistening, a reticulum of darker lines. This structure causes the marbled appearance of the drug. The fracture is granular. The transverse section of the rhizome shows a narrow outer zone of radiating brownish-red lines. These medullary rays are crossed perpendicularly by a dark cambial ring. Inside this zone is a ring of small star-spot formations of anomalous vascular bundles. The root shows a more radiate structure.

B. Reduce to a powder (355) (*2.9.12*). The powder is orange to brownish-yellow. Examine under a microscope using *chloral hydrate solution R*. The powder shows the following diagnostic characters: large calcium oxalate cluster crystals, which may measure more than 100 µm, and their fragments; reticulately thickened non-lignified vessels measuring up to 175 µm. Numerous groups of rounded or polygonal, thin-walled parenchyma cells. Sclereids and fibres are absent. Examine under a microscope using a 50 per cent *V/V* solution of *glycerol R*. The powder shows simple, rounded or compound (2 to 4) starch granules with a star-shaped hilum.

C. Examine by thin-layer chromatography (*2.2.27*), using a suitable silica gel as the coating substance.

Test solution. Heat 50 mg of the powdered herbal drug (180) (*2.9.12*) in a water-bath for 15 min with a mixture of 1 mL of *hydrochloric acid R* and 30 mL of *water R*. Allow to cool and shake the liquid with 25 mL of *ether R*. Dry the ether layer over *anhydrous sodium sulfate R* and filter. Evaporate the ether layer to dryness and dissolve the residue in 0.5 mL of *ether R*.

Reference solution. Dissolve 5 mg of *emodin R* in 5 mL of *ether R*.

Apply separately to the plate as bands 20 µL of each solution. Develop over a path of 10 cm using a mixture of 1 volume of *anhydrous formic acid R*, 25 volumes of *ethyl acetate R* and 75 volumes of *light petroleum R*. Allow the plate to dry in air and examine in ultraviolet light at 365 nm. The chromatogram obtained with the reference solution shows in its central part a zone of orange fluorescence (emodin). The chromatogram obtained with the test solution shows: a zone due to emodin; above the emodin zone, two zones of similar fluorescence (physcione and chrysophanol, in order of increasing R_F value); below the emodin zone, also two zones of similar fluorescence (rhein and aloe-emodin, in order of decreasing R_F value). Spray with a 100 g/L solution of *potassium hydroxide R* in *methanol R*. All the zones become red to violet.

D. To about 50 mg of the powdered herbal drug (180) (*2.9.12*) add 25 mL of *dilute hydrochloric acid R* and heat the mixture on a water-bath for 15 min. Allow to cool, shake with 20 mL of *ether R* and discard the aqueous layer. Shake the ether layer with 10 mL of *dilute ammonia R1*. The aqueous layer becomes red to violet.

TESTS

Rheum rhaponticum. Examine by thin-layer chromatography (*2.2.27*), using *silica gel G R* as the coating substance.

Test solution. To 0.2 g of the powdered herbal drug (180) (*2.9.12*) add 2 mL of *methanol R* and boil for 5 min under a reflux condenser. Allow to cool and filter. Use the filtrate as the test solution.

Reference solution. Dissolve 10 mg of *rhaponticin R* in 10 mL of *methanol R*.

Apply separately to the plate, as bands not more than 20 mm by 3 mm, 20 µL of each solution. Develop over a path of 12 cm using a mixture of 20 volumes of *methanol R* and 80 volumes of *methylene chloride R*. Allow the plate to dry in air and spray with *phosphomolybdic acid solution R*. The chromatogram obtained with the test solution does not show a blue zone near the line of application (rhaponticin) corresponding to the zone in the chromatogram obtained with the reference solution.

Loss on drying (*2.2.32*). Not more than 12.0 per cent, determined on 1.000 g of the powdered herbal drug (180) (*2.9.12*) by drying in an oven at 105 °C.

Total ash (*2.4.16*). Not more than 12.0 per cent.

Ash insoluble in hydrochloric acid (*2.8.1*). Not more than 2.0 per cent.

ASSAY

Carry out the assay protected from bright light.

Introduce 0.100 g of the powdered herbal drug (180) (*2.9.12*) into a 100 mL flask. Add 30.0 mL of *water R*, mix and weigh. Heat in a water-bath under a reflux condenser for 15 min. Allow to cool, add 50 mg of *sodium hydrogen carbonate R*,

weigh and adjust to the original mass with *water R*. Centrifuge and transfer 10.0 mL of the liquid to a 100 mL round-bottomed flask with a ground-glass neck. Add 20 mL of *ferric chloride solution R1* and mix. Heat under a reflux condenser on a water-bath for 20 min, add 1 mL of *hydrochloric acid R* and heat for a further 20 min, shaking frequently. Cool, transfer to a separating funnel and shake with three quantities, each of 25 mL, of *ether R* previously used to rinse the flask. Combine the ether extracts and wash with two quantities, each of 15 mL, of *water R*. Filter the ether extracts through a plug of absorbent cotton into a volumetric flask and dilute to 100.0 mL with *ether R*. Evaporate 10.0 mL carefully to dryness on a water-bath and dissolve the residue in 10.0 mL of a 5 g/L solution of *magnesium acetate R* in *methanol R*. Measure the absorbance (*2.2.25*) at 515 nm, using *methanol R* as the compensation liquid.

Calculate the percentage content of rhein from the expression:

$$\frac{A \times 0.64}{m}$$

i.e. taking the specific absorbance of rhein to be 468, calculated on the basis of the specific absorbance of barbaloin.

A = absorbance at 515 nm,

m = mass of the herbal drug used, in grams.

01/2012:1884

RIBWORT PLANTAIN

Plantaginis lanceolatae folium

DEFINITION

Whole or fragmented, dried leaf and scape of *Plantago lanceolata* L. *s.l.*

Content: minimum 1.5 per cent of total *ortho*-dihydroxycinnamic acid derivatives expressed as acteoside ($C_{29}H_{36}O_{15}$; M_r 624.6) (dried drug).

IDENTIFICATION

A. The leaf is up to 30 cm long and 4 cm wide, yellowish-green to brownish-green, with a prominent, whitish-green, almost parallel venation on the abaxial surface. It consists of a lanceolate lamina narrowing at the base into a channelled petiole. The margin is indistinctly dentate and often undulate. It has 3, 5 or 7 primary veins, nearly equal in length and running almost parallel. Hairs may be almost absent, sparsely scattered or sometimes abundant, especially on the lower surface and over the veins. The scape is brownish-green, longer than the leaves, 3-4 mm in diameter and is deeply grooved longitudinally, with 5-7 conspicuous ribs. The surface is usually covered with fine hairs.

B. Microscopic examination (*2.8.23*). The powder is yellowish-green. Examine under a microscope using *chloral hydrate solution R*. The powder shows the following diagnostic characters (Figure 1884.-1): fragments of epidermis, composed of cells with irregularly sinuous anticlinal walls, the fragments of the upper epidermis of the lamina in surface view [H] and in transverse section [D] are accompanied by palisade parenchyma [Da, Ha], and those of the lower epidermis in surface view [G] show stomata (*2.8.3*) mostly of the diacytic type [Ga] and sometimes of the anomocytic type [Gb]; the multicellular, uniseriate, conical covering trichomes are highly characteristic, whole [C] or mostly fragmented [A], with a basal cell larger than the other epidermal cells followed by a short cell supporting 2 or more elongated cells with the lumen narrow and variable, occluded at intervals corresponding to slight swellings in the trichome and giving a jointed appearance, the terminal cell has an acute apex and a filiform lumen; the glandular trichomes have a unicellular, cylindrical stalk and a multicellular, elongated, conical head consisting of several rows of small cells and a single terminal cell [B, Gc]; dense groups of lignified fibro-vascular tissue with narrow, spirally and annularly thickened vessels and slender, moderately thickened fibres [F]; fragments of the scape [E] with cells with thickened walls and a coarsely ridged cuticle, stomata [Ec], multicellular, uniseriate covering trichomes [Eb] and glandular trichomes [Ea] of the type previously described.

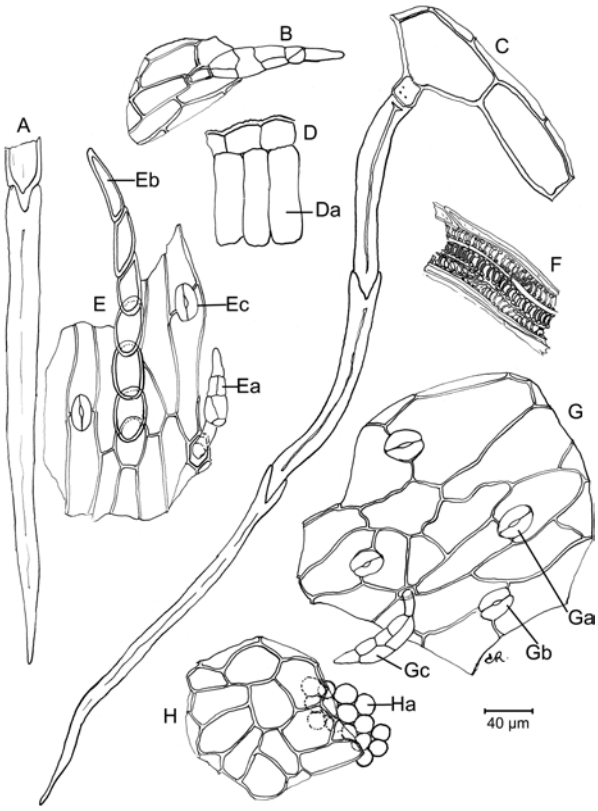

Figure 1884.-1. – *Illustration for identification test B of powdered herbal drug of ribwort plantain*

C. Examine the chromatograms obtained in the test for *Digitalis lanata* leaves.

Results A: see below the sequence of zones present in the chromatogram obtained with the reference solution and the test solution. Furthermore, other zones may be present in the chromatogram obtained with the test solution.

Top of the plate	
Acteoside: a yellow zone	A yellow zone (acteoside)
Aucubin: a blue zone	A blue zone (aucubin)
Reference solution	**Test solution**

TESTS

***Digitalis lanata* leaves**. Thin-layer chromatography (*2.2.27*).

Solvent mixture: *water R*, *methanol R* (30:70 *V/V*).

Test solution. Use a freshly prepared solution. To 1 g of the powdered herbal drug (355) (*2.9.12*) in a 25 mL flask, add 10 mL of the solvent mixture and shake for 30 min. Filter, rinse the flask and the filter with 2 quantities, each of 5 mL, of the solvent mixture. Dilute to 25 mL with the solvent mixture.

Reference solution. Dissolve 1 mg of *acteoside R* and 1 mg of *aucubin R* in 1 mL of the solvent mixture.

Plate: *TLC silica gel F_{254} plate R*.

Herbal drugs

Mobile phase: *anhydrous formic acid R*, *glacial acetic acid R*, *water R*, *ethyl acetate R* (11:11:27:100 *V/V/V/V*).

Application: 10 µL as bands.

Development: over a path of 8 cm; heat immediately after development at about 120 °C for 5-10 min.

Detection A: examine in daylight.

Detection B: examine in ultraviolet light at 365 nm.

Results B: the chromatogram obtained with the test solution shows no bright blue fluorescent zone just below the reddish-brown fluorescent zone corresponding to aucubin in the chromatogram obtained with the reference solution.

Foreign matter (*2.8.2*): maximum 5 per cent of leaves of different colour and maximum 2 per cent of other foreign matter.

Loss on drying (*2.2.32*): maximum 10.0 per cent, determined on 1.000 g of the powdered herbal drug (355) (*2.9.12*) by drying in an oven at 105 °C for 2 h.

Total ash (*2.4.16*): maximum 14.0 per cent.

ASSAY

Stock solution. In a flask, place 1.000 g of the powdered herbal drug (355) (*2.9.12*) and add 90 mL of *ethanol (50 per cent V/V) R*. Boil in a water-bath under a reflux condenser for 30 min. Allow to cool and filter into a 100 mL volumetric flask. Rinse the flask and the filter with 10 mL of *ethanol (50 per cent V/V) R*. Combine the filtrate and the rinsings and dilute to 100.0 mL with *ethanol (50 per cent V/V) R*.

Test solution. To a 10 mL volumetric flask add, mixing after each addition, 1.0 mL of the stock solution, 2 mL of *0.5 M hydrochloric acid*, 2 mL of a solution prepared by dissolving 10 g of *sodium nitrite R* and 10 g of *sodium molybdate R* in 100 mL of *water R*, and 2 mL of *dilute sodium hydroxide solution R*. Dilute to 10.0 mL with *water R*.

Immediately measure the absorbance (*2.2.25*) of the test solution at 525 nm using as compensation liquid a solution prepared as follows: to a 10 mL volumetric flask add 1.0 mL of the stock solution, 2 mL of *0.5 M hydrochloric acid* and 2 mL of *dilute sodium hydroxide solution R*, and dilute to 10.0 mL with *water R*.

Calculate the percentage content of total *ortho*-dihydroxycinnamic acid derivatives, expressed as acteoside, using the following expression:

$$\frac{A \times 1000}{185 \times m}$$

i.e. taking the specific absorbance to be 185 for acteoside at 525 nm.

A = absorbance of the test solution at 525 nm;

m = mass of the substance to be examined, in grams.

01/2013:1623

ROSELLE

Hibisci sabdariffae flos

DEFINITION

Whole or cut dried calyces and epicalyces of *Hibiscus sabdariffa* L. collected during fruiting.

Content: minimum 13.5 per cent of acids, expressed as citric acid ($C_6H_8O_7$; M_r 192.1) (dried drug).

CHARACTERS

Acidic taste.

IDENTIFICATION

A. The calyx is joined in the lower half to form an urceolate structure, the upper half dividing to form 5 long acuminate recurved tips. The tips have a prominent, slightly protruding midrib and a large, thick nectary gland about 1 mm in diameter. The epicalyx consists of 8-12 small, obovate leaflets, which are adnate to the base of the calyx. The calyx and epicalyx are fleshy, dry, easily fragmented and bright red or deep purple, somewhat lighter at the base of the inner side.

B. Microscopic examination (*2.8.23*). The powder is red or violet-red. Examine under a microscope using *chloral hydrate solution R*. The powder shows the following diagnostic characters (Figure 1623.-1): predominantly red fragments [A, F] consisting of polygonal epidermal cells with very irregularly thickened walls, in surface view [Ac, Fa], some containing cluster crystals of calcium oxalate [Fb], with underlying parenchyma consisting of ovoid cells with slightly thickened walls [Aa], some containing cluster crystals of calcium oxalate [Ab] whilst others are filled with mucilage, unicellular, long, flexuous, twisted covering trichomes [Ad], rigid, straight, unicellular covering trichomes, simple or in groups of 2-4 [Fd], glandular trichomes with a unicellular stalk and a globular or oval, multicellular and biseriate head [Fe] and stomata usually of the anisocytic type (*2.8.3*) [Fc]; numerous fragments of vascular bundles [D] with spiral or reticulate vessels [Da], sometimes accompanied by sclerenchymatous fibres with a wide lumen [Db], and parenchyma [Dc], of which some cells contain cluster crystals of calcium oxalate [Dd], whilst others are mucilage-filled [De]; rare, rectangular, parenchymatous sclereids [H]; numerous fragments of rigid [C, G] or flexuous [J] covering trichomes; free cluster crystals of calcium oxalate [B] and glandular trichomes [E]; exceptionally, spherical pollen grains, about 200 µm in diameter, with a spiny exine.

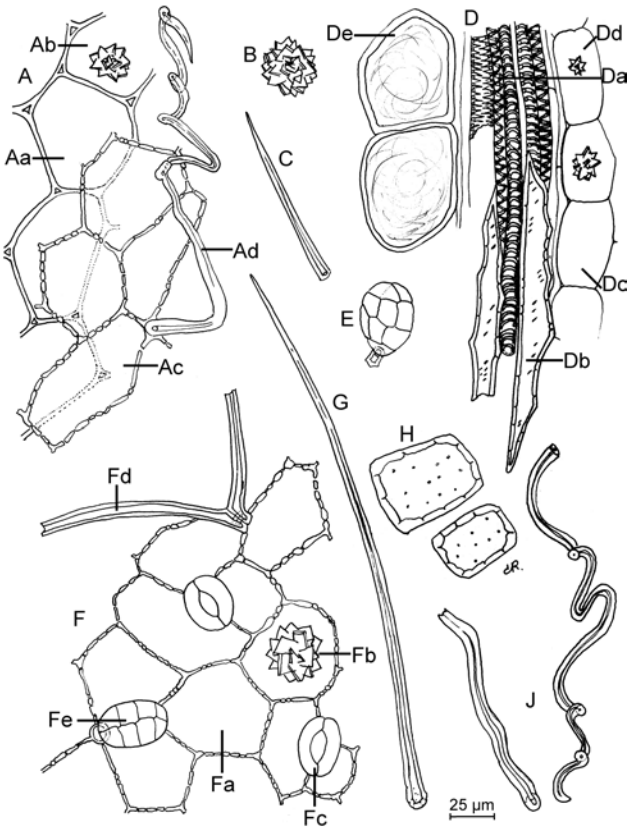

Figure 1623.-1. – *Illustration for identification test B of powdered herbal drug of roselle*

C. Thin-layer chromatography (*2.2.27*).

Test solution. To 1 g of the powdered herbal drug (355) (*2.9.12*) add 10 mL of *ethanol (60 per cent V/V) R*. Shake for 15 min and filter.

Herbal drugs

Reference solution. Dissolve 2.5 mg of *quinaldine red R* and 2.5 mg of *sulfan blue R* in 10 mL of *methanol R*.

Plate: *TLC silica gel plate R* (5-40 µm) [or *TLC silica gel plate R* (2-10 µm)].

Mobile phase: *anhydrous formic acid R*, *water R*, *butanol R* (10:12:40 *V/V/V*).

Application: 5 µL [or 2 µL] as bands of 10 mm [or 8 mm].

Development: over a path of 10 cm [or 6 cm].

Drying: in air.

Detection: examine immediately in daylight.

Results: see below the sequence of zones present in the chromatograms obtained with the reference solution and the test solution. Furthermore, other faint zones may be present in the chromatogram obtained with the test solution.

Top of the plate	
Quinaldine red: an orange-red zone	
	An intense violet zone
Sulfan blue: a blue zone	
	An intense violet-blue zone
Reference solution	**Test solution**

TESTS

Foreign matter (*2.8.2*): maximum 2 per cent of fragments of fruits (red funicles and parts of the 5-caverned capsule with yellowish-grey pericarp, whose thin walls consist of several layers of differently directed fibres; flattened, reniform seeds with a dotted surface) and maximum 2 per cent of other foreign matter.

Loss on drying (*2.2.32*): maximum 11.0 per cent, determined on 1.000 g of the powdered herbal drug (355) (*2.9.12*) by drying in an oven at 105 °C for 2 h.

Total ash (*2.4.16*): maximum 10.0 per cent.

Colouring intensity. Reduce 100 g to a coarse powder (1400) (*2.9.12*) and homogenise. Reduce about 10 g of this mixture to a very fine powder (355) (*2.9.12*). To 1.0 g of this powder in a 100 mL flask add 25 mL of boiling *water R* and heat for 15 min on a water-bath with frequent shaking. Filter the hot mixture into a 50 mL graduated flask; rinse successively the 100 mL flask and the filter with 3 quantities, each of 5 mL, of warm *water R*. After cooling, dilute to 50 mL with *water R*. Dilute 5 mL of this solution to 50 mL with *water R*. Measure the absorbance (*2.2.25*) at 520 nm using *water R* as the compensation liquid. The absorbance is not less than 0.350 for the whole drug and not less than 0.250 for the cut drug.

ASSAY

Shake 1.00 g of the powdered herbal drug (355) (*2.9.12*) with 100.0 mL of *carbon dioxide-free water R* for 15 min. Filter. To 50.0 mL of the filtrate add 100 mL of *carbon dioxide-free water R*. Titrate with *0.1 M sodium hydroxide* to pH 7.0, determining the end-point potentiometrically (*2.2.20*).

1 mL of *0.1 M sodium hydroxide* is equivalent to 6.4 mg of citric acid.

01/2013:1560

ROSEMARY LEAF

Rosmarini folium

DEFINITION

Whole, dried leaf of *Rosmarinus officinalis* L.

Content:

- minimum 12 mL/kg of essential oil (anhydrous drug);
- minimum 3 per cent of total hydroxycinnamic derivatives, expressed as rosmarinic acid ($C_{18}H_{16}O_8$; M_r 360.3) (anhydrous drug).

CHARACTERS

Strongly aromatic odour.

IDENTIFICATION

A. The leaves are sessile, tough, linear or linear-lanceolate, 1-4 cm long and 2-4 mm wide, with recurved edges. The upper surface is dark green, glabrous and grainy, the lower surface is greyish-green and densely tomentose with a prominent midrib.

B. Microscopic examination (*2.8.23*). The powder is greyish-green or yellowish-green. Examine under a microscope using *chloral hydrate solution R*. The powder shows the following diagnostic characters (Figure 1560.-1): fragments of the lower epidermis in surface view [B, J] with straight or sinuous-walled cells [Ba] and numerous diacytic stomata (*2.8.3*) [Bb] and glandular trichomes [Ja] or covering trichomes or their scars [Bc, Bd]; numerous multicellular, mostly branched, covering trichomes of the lower epidermis, usually fragmented [A, C, D]; fragments of the upper epidermis in surface view [F] with cells with straight, thickened and pitted walls [Fa], and an underlying hypodermis composed of large, irregular cells with thickened and beaded anticlinal walls [Fb]; fragments of the lamina in transverse section [G], showing the epidermis covered by a very thick cuticle [Ga], hypodermal cells extending across the mesophyll [Gb] at intervals, separating 1 or 2 layers of palisade parenchyma into large, crescent-shaped areas [Gc]; glandular trichomes of 2 types, the majority with a short, unicellular stalk and a radiate head composed of 8 cells, in surface view [E] and in side view [H], others, less abundant, with a uni- or bicellular stalk and a spherical, unicellular head [Ja, K].

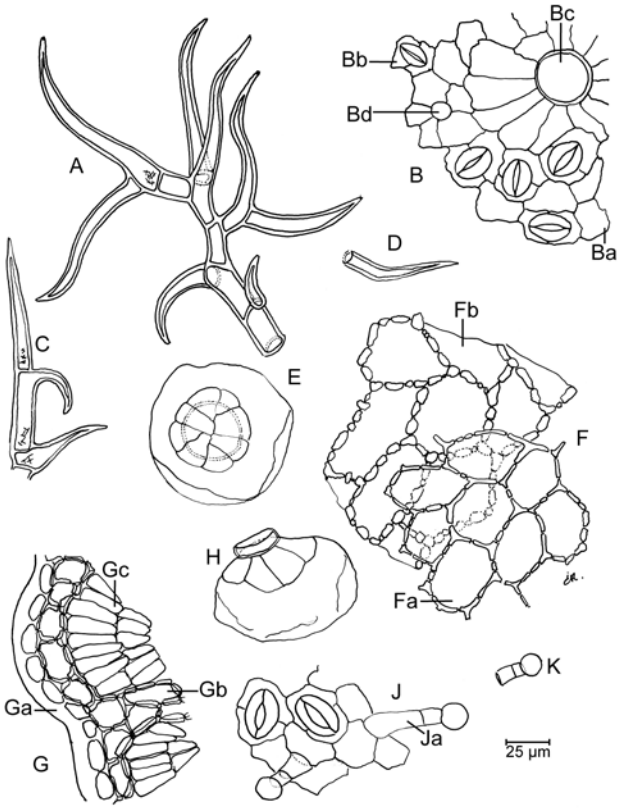

Figure 1560.-1. – *Illustration for identification test B of powdered herbal drug of rosemary leaf*

Herbal drugs

C. Thin-layer chromatography (*2.2.27*).

Test solution. Dissolve 20 µL of the oil obtained in the assay in 1 mL of *hexane R*.

Reference solution. Dissolve 5 mg of *borneol R*, 5 mg of *bornyl acetate R* and 10 µL of *cineole R* in 1 mL of *hexane R*.

Plate: *TLC silica gel plate R*.

Mobile phase: *ethyl acetate R*, *toluene R* (5:95 *V/V*).

Application: 10 µL as bands.

Development: over a path of 15 cm.

Drying: in air.

Detection: treat with *anisaldehyde solution R*, heat at 100-105 °C for 10 min and examine in daylight.

Results: see below the sequence of zones present in the chromatograms obtained with the reference solution and the test solution.

Top of the plate	
	A red zone
Bornyl acetate: a yellowish-brown zone	A yellowish-brown zone of low intensity
	A coloured zone of low intensity
Cineole: a violet zone	A violet zone
	Coloured zones of low intensity
Borneol: a violet-brown zone	A violet-brown zone
	A coloured zone of low intensity
Reference solution	**Test solution**

D. Thin-layer chromatography (*2.2.27*).

Test solution. Grind 1.0 g of the herbal drug in 10 mL of *methanol R* and filter.

Reference solution. Dissolve 1.0 mg of *caffeic acid R* and 5.0 mg of *rosmarinic acid R* in 10 mL of *methanol R*.

Plate: *TLC silica gel plate R*.

Mobile phase: *anhydrous formic acid R*, *acetone R*, *methylene chloride R* (8.5:25:85 *V/V/V*).

Application: 10 µL of the test solution and 20 µL of the reference solution, as bands.

Development: over a path of 8 cm.

Drying: in air.

Detection: examine in ultraviolet light at 365 nm.

Results: see below the sequence of zones present in the chromatograms obtained with the reference solution and the test solution.

Top of the plate	
	A pink fluorescent zone
Caffeic acid: a light blue fluorescent zone	A blue fluorescent zone of low intensity
Rosmarinic acid: a light blue fluorescent zone	An intense light blue fluorescent zone
Reference solution	**Test solution**

TESTS

Foreign matter (*2.8.2*): maximum 5 per cent of stems and maximum 2 per cent of other foreign matter.

Water (*2.2.13*): maximum 100 mL/kg, determined on 20.0 g of the powdered herbal drug (355) (*2.9.12*).

Total ash (*2.4.16*): maximum 9.0 per cent.

ASSAY

Total hydroxycinnamic derivatives

Stock solution. To 0.200 g of the powdered herbal drug (355) (*2.9.12*) add 80 mL of *ethanol (50 per cent V/V) R*. Boil in a water-bath under a reflux condenser for 30 min. Allow to cool and filter. Rinse the filter with 10 mL of *ethanol (50 per cent V/V) R*. Combine the filtrate and the rinsings in a volumetric flask and dilute to 100.0 mL with *ethanol (50 per cent V/V) R*.

Test solution. To 1.0 mL of the stock solution add 2 mL of *0.5 M hydrochloric acid*, 2 mL of a solution prepared by dissolving 10 g of *sodium nitrite R* and 10 g of *sodium molybdate R* in 100 mL of *water R*, and then add 2 mL of *dilute sodium hydroxide solution R* and dilute to 10.0 mL with *water R*; mix.

Compensation solution. Dilute 1.0 mL of the stock solution to 10.0 mL with *water R*.

Measure immediately the absorbance (*2.2.25*) of the test solution at 505 nm.

Calculate the percentage content of total hydroxycinnamic derivatives, expressed as rosmarinic acid, using the following expression:

$$\frac{A \times 2.5}{m}$$

i.e. taking the specific absorbance of rosmarinic acid to be 400.

A = absorbance of the test solution at 505 nm;

m = mass of the substance to be examined, in grams.

Essential oil (*2.8.12*). Use 25.0 g of the crushed herbal drug, a 1000 mL flask and 300 mL of *water R* as the distillation liquid. Distil at a rate of 2-3 mL/min for 3 h.

01/2008:1846

ROSEMARY OIL

Rosmarini aetheroleum

DEFINITION

Essential oil obtained by steam distillation from the flowering aerial parts of *Rosmarinus officinalis* L.

CHARACTERS

Appearance: clear, mobile, colourless or pale yellow liquid.

Characteristic odour.

IDENTIFICATION

First identification: *B*.

Second identification: *A*.

A. Thin-layer chromatography (*2.2.27*).

Test solution. Dissolve 0.5 mL of the substance to be examined in *toluene R* and dilute to 10 mL with the same solvent.

Reference solution. Dissolve 50 mg of *borneol R*, 50 mg of *bornyl acetate R* and 100 µL of *cineole R* in *toluene R* and dilute to 10 mL with the same solvent.

Plate: *TLC silica gel plate R*.

Mobile phase: *ethyl acetate R*, *toluene R* (5:95 *V/V*).

Application: 10 µL, as bands.

Development: over a path of 15 cm.

Drying: in air.

Detection: spray the plate with *vanillin reagent R* and heat the plate at 100-105 °C for 10 min. Examine immediately in daylight.

Results: see below the sequence of the zones present in the chromatograms obtained with the reference solution and the test solution. Furthermore, several violet-blue to violet-grey zones of medium intensity (terpene alcohols) are present in the lower third of the chromatogram obtained with the test solution.

Top of the plate	
	An intense violet zone
	A violet-grey zone
_____	_____
Bornyl acetate: a bluish-grey zone of low intensity	A bluish-grey zone of low intensity (bornyl acetate)
	A violet-pink zone
_____	_____
Cineole: an intense blue zone	An intense blue zone (cineole)
Borneol: a violet-blue zone of medium intensity	A violet -blue zone of medium intensity (borneol)
Reference solution	**Test solution**

B. Examine the chromatograms obtained in the test for chromatographic profile.

Results: the characteristic peaks in the chromatogram obtained with the test solution are similar in retention time to those in the chromatogram obtained with the reference solution.

TESTS

Relative density (*2.2.5*): 0.895 to 0.920.

Refractive index (*2.2.6*): 1.464 to 1.473.

Optical rotation (*2.2.7*): − 5° to + 8°.

Acid value (*2.5.1*): maximum 1.0.

Chromatographic profile. Gas chromatography (*2.2.28*): use the normalisation procedure.

Test solution. Dissolve 0.20 mL of the substance to be examined in *hexane R* and dilute to 10.0 mL with the same solvent.

Reference solution. Dissolve 20 µL of *α-pinene R*, 10 mg of *camphene R*, 20 µL of *β-pinene R*, 10 µL of *β-myrcene R*, 20 µL of *limonene R*, 50 µL of *cineole R*, 10 µL of *p-cymene R*, 50 mg of *camphor R*, 30 mg of *bornyl acetate R*, 10 mg of *α-terpineol R*, 10 mg of *borneol R* and 10 µL of *verbenone R* in *hexane R* and dilute to 10.0 mL with the same solvent.

Column:
- *material*: fused silica,
- *size*: *l* = 30 m (a film thickness of 1 µm may be used) to 60 m (a film thickness of 0.2 µm may be used), Ø = 0.25-0.53 mm,
- *stationary phase*: *macrogol 20 000 R*.

Carrier gas: *helium for chromatography R*.

Flow rate: 1 mL/min.

Split ratio: 1:50.

Temperature:

	Time (min)	Temperature (°C)
Column	0 - 10	50
	10 - 85	50 → 200
	85 - 110	200
Injection port		200
Detector		250

Detection: flame ionisation.

Injection: 1 µL.

Elution order: order indicated in the composition of the reference solution. Record the retention times of these substances.

System suitability: reference solution:
- *resolution*: minimum 1.5 between the peaks due to limonene and cineole and minimum 1.5 between the peaks due to α-terpineol and borneol.

Using the retention times determined from the chromatogram obtained with the reference solution, locate the components of the reference solution in the chromatogram obtained with the test solution.

Determine the percentage content of these components.

For rosemary oil, Spanish type, the percentages are within the following ranges:
- *α-pinene*: 18 per cent to 26 per cent,
- *camphene*: 8.0 per cent to 12.0 per cent,
- *β-pinene*: 2.0 per cent to 6.0 per cent,
- *β-myrcene*: 1.5 per cent to 5.0 per cent,
- *limonene*: 2.5 per cent to 5.0 per cent,
- *cineole*: 16.0 per cent to 25.0 per cent,
- *p-cymene*: 1.0 per cent to 2.2 per cent,
- *camphor*: 13.0 per cent to 21.0 per cent,
- *bornyl acetate*: 0.5 per cent to 2.5 per cent,
- *α-terpineol*: 1.0 per cent to 3.5 per cent,
- *borneol*: 2.0 per cent to 4.5 per cent,
- *verbenone*: 0.7 per cent to 2.5 per cent.

For rosemary oil, Moroccan and Tunisian type, the percentages are within the following ranges:
- *α-pinene*: 9.0 per cent to 14.0 per cent,
- *camphene*: 2.5 per cent to 6.0 per cent,
- *β-pinene*: 4.0 per cent to 9.0 per cent,
- *β-myrcene*: 1.0 per cent to 2.0 per cent,
- *limonene*: 1.5 per cent to 4.0 per cent,
- *cineole*: 38.0 per cent to 55.0 per cent,
- *p-cymene*: 0.8 per cent to 2.5 per cent,
- *camphor*: 5.0 per cent to 15.0 per cent,
- *bornyl acetate*: 0.1 per cent to 1.5 per cent,
- *α-terpineol*: 1.0 per cent to 2.6 per cent,
- *borneol*: 1.5 per cent to 5.0 per cent,
- *verbenone*: maximum 0.4 per cent.

STORAGE

At a temperature not exceeding 25 °C.

LABELLING

The label states that the content is Spanish type or Moroccan and Tunisian type.

01/2008:2386
corrected 7.0

SAFFLOWER FLOWER

Carthami flos

DEFINITION

Dried flower of *Carthamus tinctorius* L.

Content: minimum 1.0 per cent of total flavonoids, expressed as hyperoside ($C_{21}H_{20}O_{12}$; M_r 464.4) (dried drug).

IDENTIFICATION

A. The orange-yellow or reddish-orange, tubular, gametalous, actinomorphic florets are separate from the capitulum. Each consists of a long, filiform tube, about 1 cm long divided into 5 equal, narrow, lanceolate lobes, about 0.5 cm long. From the opening of the tube emerges the hollow cylinder formed by the fused yellow anthers, in which the filiform style persists, thickened near the apex.

B. Reduce to a powder (355) (*2.9.12*). The powder is orange-yellow. Examine under a microscope using *chloral hydrate solution R*. The powder shows fragments of the corolla tube with epidermis consisting of elongated, thin-walled polygonal cells; fragments of the lobes of the corolla showing at their apices a large number of

Herbal drugs

small, rounded, very prominent papillae; fragments of parenchyma containing vascular bundles surrounded by secretory canals with reddish-brown contents; fragments of anthers consisting of irregularly shaped cells whose walls show thickenings in characteristic bands; fragments of the style, whose lower part consists of elongated cells and which ends in a stigma, bristling with rather long, conical, confluent papillae; rounded or elliptical triporate pollen grains up to 60 µm in diameter with an echinulate exine; calcium oxalate prisms, either isolated or present in parenchyma cells.

C. Thin-layer chromatography (*2.2.27*).

Test solution. To 1.0 g of the powdered herbal drug (355) (*2.9.12*) add 10 mL of *methanol R*. Sonicate for 10 min and centrifuge.

Reference solution. Dissolve 1 mg of *rutin R* and 5 mg of *quercetin dihydrate R* in 50 mL of *methanol R*.

Plate: *TLC silica gel plate R* (5-40 µm) [or *TLC silica gel plate R* (2-10 µm)].

Mobile phase: *acetic acid R*, *anhydrous formic acid R*, *water R*, *ethyl acetate R* (11:11:27:100 *V/V/V/V*).

Application: 25 µL as bands of 15 mm [or 10 µL as bands of 8 mm].

Development: over a path of 12 cm [or 7 cm].

Drying: in air.

Detection A: examine in daylight.

Results A: see below the sequence of the zones present in the chromatograms obtained with the reference solution and the test solution. Furthermore, other faint zones may be present in the chromatogram obtained with the test solution.

Top of the plate	
Quercetin: a light yellow zone	
_____	_____
_____	_____
Rutin: a light yellow zone	
	A red zone
	A yellow zone
	A yellow zone
Reference solution	**Test solution**

Detection B: heat at 100 °C for 3 min; spray the plate whilst still hot with a 10 g/L solution of *diphenylboric acid aminoethyl ester R* in *methanol R* and then with a 50 g/L solution of *macrogol 400 R* in *methanol R*; allow to dry in air for about 30 min; examine in ultraviolet light at 365 nm.

Results B: see below the sequence of zones present in the chromatograms obtained with the reference solution and the test solution. Furthermore, other faint zones may be present in the chromatogram obtained with the test solution.

Top of the plate	
Quercetin: an orange fluorescent zone	
	A blue fluorescent zone
_____	_____
	A green fluorescent zone
	A brown fluorescent zone
	A green fluorescent zone
_____	_____
Rutin: a yellow fluorescent zone	
	A yellow fluorescent zone
	A green fluorescent zone
	A brown fluorescent zone
Reference solution	**Test solution**

TESTS

Absorbance (*2.2.25*).

A. *Yellow pigment*: macerate 0.1 g of the powdered herbal drug (355) (*2.9.12*) in 150 mL of *water R*, stir for 1 h, filter through a sintered-glass filter (40) (*2.1.2*) and dilute to 500.0 mL, washing the residue, with *water R*. The absorbance is not less than 0.40 at 401 nm.

B. *Red pigment*: to 0.25 g of the powdered herbal drug (355) (*2.9.12*) add 50 mL of a mixture of 20 volumes of *water R* and 80 volumes of *acetone R*. Heat on a water-bath at 50 °C for 90 min. Allow to cool, filter through a sintered-glass filter (40) (*2.1.2*) and dilute to 100.0 mL, washing the residue with a mixture of 20 volumes of *water R* and 80 volumes of *acetone R*. The absorbance is not less than 0.40 at 518 nm.

Loss on drying (*2.2.32*): maximum 11.0 per cent, determined on 1.000 g of the powdered herbal drug (355) (*2.9.12*) by drying in an oven at 105 °C for 2 h.

Total ash (*2.4.16*): maximum 10.0 per cent.

Ash insoluble in hydrochloric acid (*2.8.1*): maximum 3.0 per cent.

ASSAY

Solution A. Place 0.250 g of the powdered herbal drug (180) (*2.9.12*) in a 250 mL flask and add 95 mL of *methanol R*. Heat under a reflux condenser on a water-bath for 30 min. Allow to cool and filter. Rinse the filter with 5 mL of *methanol R*. Combine the filtrate and the rinsing solution in a volumetric flask and dilute to 100.0 mL with *methanol R*.

Test solution. Place 5.0 mL of solution A in a volumetric flask and dilute to 20.0 mL with a 20 g/L solution of *aluminium chloride R* in *methanol R*.

Compensation solution. Place 5.0 mL of solution A in a volumetric flask and dilute to 20.0 mL with *methanol R*.

After exactly 15 min, measure the absorbance (*2.2.25*) of the test solution at 420 nm by comparison with the compensation solution. Calculate the percentage content of total flavonoids, expressed as hyperoside, using the following expression:

$$\frac{A}{m}$$

taking the specific absorbance of hyperoside at 420 nm to be 400.

A = absorbance of the test solution, at 420 nm;

m = mass of the substance to be examined, in grams.

01/2008:1370

SAGE LEAF (SALVIA OFFICINALIS)

Salviae officinalis folium

DEFINITION

Whole or cut dried leaves of *Salvia officinalis* L.

Content: minimum 15 mL/kg of essential oil for the whole drug and minimum 10 mL/kg of essential oil for the cut drug (anhydrous drug).

CHARACTERS

Sage leaf (*Salvia officinalis*) oil is rich in thujone.

IDENTIFICATION

A. The lamina of whole sage leaf (Salvia officinalis) is about 2 cm to 10 cm long and 1 cm to 2 cm wide, oblong-ovate, elliptical. The margin is finely crenate to smooth. The apex is rounded or subacute and the base is shrunken at the petiole and rounded or cordate. The upper surface is greenish-grey and finely granular; the lower surface is white and pubescent and shows a dense network of raised veinlets.

B. Reduce to a powder (355) (*2.9.12*). The powder is light grey to brownish-green. Examine under a microscope using *chloral hydrate solution R*. The powder shows the following diagnostic characters: very numerous articulated and bent trichomes with narrow elongated cells and a very thick cell at the base as well as fragments of these trichomes; fragments of the upper epidermis with pitted, somewhat polygonal cells; fragments of the lower epidermis with sinuous cells and numerous diacytic stomata (*2.8.3*); rare single glandular trichomes with a uni- or bicellular head and a stalk consisting of 1 to 4 cells; abundant glandular trichomes with a unicellular stalk and a head composed of 8 radiating cells with a raised common cuticle.

C. Thin-layer chromatography (*2.2.27*).

Test solution. Shake 0.5 g of the freshly powdered herbal drug (355) (*2.9.12*) with 5 mL of *ethanol R* for 5 min.

Reference solution. Dissolve 20 µL of *thujone R* and 25 µL of *cineole R* in 20 mL of *ethanol R*.

Plate: *TLC silica gel plate R*.

Mobile phase: *ethyl acetate R*, *toluene R* (5:95 *V/V*).

Application: 20 µL, as bands.

Development: over a path of 15 cm.

Drying: in air.

Detection: spray the plate with a 200 g/L solution of *phosphomolybdic acid R* in *ethanol R* and heat at 100-105 °C for 10 min. Examine in daylight.

Results: see below the sequence of the zones present in the chromatograms obtained with the reference solution and the test solution. Furthermore, other zones are present in the chromatogram obtained with the test solution.

Top of the plate	
	A blue zone (near the solvent front)
α-Thujone and β-thujone: 2 pinkish-violet zones Cineole: a blue zone	2 pinkish-violet zones (α-thujone and β-thujone) A blue zone (cineole)
	Blue zones
Reference solution	**Test solution**

TESTS

Foreign matter (*2.8.2*): maximum 3 per cent of stems and maximum 2 per cent of other foreign matter.

Water (*2.2.13*): maximum 100 mL/kg, determined on 20.0 g.

Total ash (*2.4.16*): maximum 10.0 per cent.

ASSAY

Essential oil (*2.8.12*). Use 20.0 g of the substance to be examined, cut, if necessary, immediately before the assay, a 500 mL flask, 250 mL of *water R* as the distillation liquid and 0.5 mL of *xylene R* in the graduated tube. Distil at a rate of 2-3 mL/min for 2 h.

01/2008:1561

SAGE LEAF, THREE-LOBED

Salviae trilobae folium

DEFINITION

Whole or cut, dried leaves of *Salvia fructicosa* Mill. (*S. triloba* L. fil).

Content: minimum 18 mL/kg of essential oil in the whole drug (anhydrous drug) and minimum 12 mL/kg of essential oil in the cut drug (anhydrous drug).

CHARACTERS

Spicy odour when ground, similar to eucalyptus oil.

IDENTIFICATION

A. The lamina of the whole three-lobed sage leaf is about 8-50 mm long and about 4-20 mm wide, and oblong-ovate or lanceolate. The margin is finely crenate and undulate but indistinct owing to the dense hairy covering on both surfaces. The base is obtuse and sometimes bears 1 or 2 more or less developed lobes. The upper surface is grey-tomentose pubescent, the lower surface is densely white-tomentose pubescent; the venation is indistinct. The densely white-tomentose pubescent petiole is about 1 mm in diameter.

B. Reduce to a powder (355) (*2.9.12*). The powder is greyish-green and tomentose. Examine under a microscope using *chloral hydrate solution R*. The powder shows the following diagnostic characters: very numerous, whole or fragmented, covering and glandular trichomes, scattered and attached to fragments of the epidermises; covering trichomes articulated, uniseriate, thick-walled and bluntly tapering, those on the upper epidermis straight, those on the lower epidermis longer, tortuous and more densely packed; glandular trichomes, some with a unicellular or bicellular head and a stalk consisting of from 1-4 cells, the majority having a short, unicellular stalk and a head composed of 8 radiating cells with a raised common cuticle; the upper epidermis with pitted and beaded cells, somewhat polygonal, with a few diacytic stomata (*2.8.3*); the lower epidermis with sinuous or wavy-walled cells and numerous diacytic stomata.

C. Examine the chromatogram obtained in the test for thujone.

Results: the chromatogram obtained with the test solution shows a blue zone due to cineole, equal or greater in size and intensity to the zone in the chromatogram obtained with the reference solution. Further zones are present.

TESTS

Thujone. Thin-layer chromatography (*2.2.27*).

Test solution. Shake 0.3 g of the freshly powdered herbal drug (355) (*2.9.12*) with 5.0 mL of *anhydrous ethanol R* for 5 min.

Reference solution. Dissolve 20 µL of *thujone R* and 25 µL of *cineole R* in 20 mL of *anhydrous ethanol R*.

Plate: *TLC silica gel plate R*.

Mobile phase: *ethyl acetate R*, *toluene R* (5:95 *V/V*).

Application: 20 µL, as bands.

Development: over a path of 15 cm.

Drying: in air.

Detection: spray with a 200 g/L solution of *phosphomolybdic acid R* in *anhydrous ethanol R* and heat at 100-105 °C for 10 min. Examine in daylight.

Results: the chromatogram obtained with the reference solution shows in the middle part a blue zone (cineole) and in the upper part a pink-blue zone (thujone). The chromatogram obtained with the test solution shows no zone or a very faint pink-blue zone due to thujone.

Foreign matter (*2.8.2*): maximum 8 per cent of stems and maximum 2 per cent of other foreign matter.

Water (*2.2.13*): maximum 100 mL/kg, determined on 20.0 g.

Total ash (*2.4.16*): maximum 10.0 per cent.

ASSAY

Essential oil (*2.8.12*). Use 20.0 g of drug, if necessary cut immediately before the assay, a 500 mL flask, 250 mL of *water R* as the distillation liquid. Add 0.50 mL of *xylene R* in the graduated tube. Distil at a rate of 2-3 mL/min for 2 h.

01/2008:1889

SAGE TINCTURE

Salviae tinctura

DEFINITION

Tincture produced from *Sage leaf (Salvia officinalis) (1370)*.

Content: minimum 0.1 per cent *m/m* of essential oil.

PRODUCTION

The tincture is produced from 1 part of comminuted drug and 10 parts of ethanol (70 per cent *V/V*) by a suitable procedure.

CHARACTERS

Appearance: brownish liquid with a characteristic odour.

IDENTIFICATION

Thin-layer chromatography (*2.2.27*).

Test solution. The tincture to be examined.

Reference solution. Dissolve 20 µL of *thujone R* and 25 µL of *cineole R* in 20 mL of *ethanol R*.

Plate: *TLC silica gel plate R*.

Mobile phase: *ethyl acetate R*, *toluene R* (5:95 *V/V*).

Application: 20 µL, as bands.

Development: over a path of 15 cm.

Drying: in air.

Detection: spray with a 200 g/L solution of *phosphomolybdic acid R* in *ethanol R* and heat at 100-105 °C for 10 min. Examine in daylight.

Results: see below the sequence of the zones present in the chromatograms obtained with the reference solution and the test solution. Furthermore, other zones are present in the chromatogram obtained with the test solution.

Top of the plate	
	A blue zone (near the solvent front)
———	———
α-Thujone and β-thujone: 2 pinkish-violet zones	2 pinkish-violet zones (α-thujone and β-thujone)
Cineole: a blue zone	A blue zone (cineole)
———	———
	Blue zones
Reference solution	**Test solution**

TESTS

Ethanol content (*2.9.10*): 64 per cent *V/V* to 69 per cent *V/V*.

Methanol and 2-propanol (*2.9.11*): maximum 0.05 per cent *V/V* of methanol and maximum 0.05 per cent of 2-propanol.

Dry residue (*2.8.16*): minimum 2.0 per cent *m/m*, determined on 3.00 g.

ASSAY

In a 500 mL round-bottomed flask, place 30.0 g of the tincture and add 100 mL of *water R*. Distil, using a descending condenser, into a separating funnel which has been marked beforehand at 50 mL. Stop the distillation process as soon as the distillate reaches the 50 mL mark. Rinse the condenser with 10 mL of *pentane R*. Dissolve in the distillate sufficient *sodium chloride R* to produce a saturated solution. Shake with 3 quantities, each of 20 mL, of *pentane R*. Dry the combined pentane layers, including the pentane from rinsing the condenser, over *anhydrous sodium sulfate R* and filter through a plug of absorbent cotton into a weighed 100 mL round-bottomed flask. Wash the sodium sulfate several times with small quantities of *pentane R*. Remove the pentane carefully at a temperature not exceeding 40 °C. Dry the residue in a desiccator over *diphosphorus pentoxide R* and hard paraffin at atmospheric pressure and at room temperature for 2 h. Weigh the residue (essential oil).

04/2013:2663

SALVIA MILTIORRHIZA ROOT AND RHIZOME

Salviae miltiorrhizae radix et rhizoma

DEFINITION

Dried, whole or fragmented rhizome and root of *Salvia miltiorrhiza* Bunge, collected in spring or autumn.

Content:

- *salvianolic acid B* ($C_{36}H_{30}O_{16}$; M_r 719): minimum 3.0 per cent (dried drug);
- *tanshinone II_A* ($C_{19}H_{18}O_3$; M_r 294.3): minimum 0.12 per cent (dried drug).

IDENTIFICATION

A. The rhizome is short and thick, sometimes with stem remnants at the apex. The roots are numerous, about 10-20 cm long and 0.3-1 cm in diameter, cylindrical and slightly curved; some are branched, with secondary roots and rootlets. The outer surface is reddish-brown or dark reddish-brown, marked with longitudinal striations. The bark of old roots comes off usually as purplish-brown scales. The texture is hard and fragile. The fracture is soft, fissured or slightly even and dense, with a reddish-brown outer part and a greyish-yellow or purplish-brown wood, showing bundles of yellowish-white vessels, arranged radially.

Cultivars are relatively stout, about 0.5-1.5 cm in diameter. The outer surface is brownish-red, longitudinally wrinkled. The bark adheres closely to the wood and is difficult to remove. The texture is compact; the fracture is relatively even.

B. Microscopic examination (*2.8.23*). The powder is brownish-red. Examine under a microscope using *chloral hydrate solution R*. The powder shows the following diagnostic characters: fragments of cork in surface view, consisting of subrectangular or polygonal cells, up to 150 µm in diameter, containing yellowish-brown pigment; fragments of parenchyma consisting of polygonal or elongated, thin-walled cells that may contain yellowish-brown pigment; xylem fibres usually in bundles, long and fusiform, with pitted walls showing oblique or criss-cross striations; very numerous reticulate or pitted vessels, 3-120 µm in diameter, free, in bundles or sometimes accompanying the fibres.

C. Thin-layer chromatography (*2.2.27*).

Test solution. To 1 g of the powdered herbal drug (355) (*2.9.12*) add 40 mL of *methanol R*. Sonicate for 15 min. Filter. Evaporate the filtrate to 1 mL.

Reference solution. Dissolve 2 mg of *salvianolic acid B R* and 2 mg of *tanshinone II_A R* in 1 mL of *methanol R*.

Plate: *TLC silica gel F_{254} plate R* (5-40 µm) [or *TLC silica gel F_{254} plate R* (2-10 µm)].

Mobile phase: *methanol R*, *anhydrous formic acid R*, *toluene R*, *methylene chloride R*, *ethyl acetate R* (5:20:20:30:40 *V/V/V/V/V*).

Application: 5 µL [or 5 µL] as bands of 8 mm [or 8 mm].

Development: over a path of 8 cm [or 6 cm].

Drying: in air.

Detection A: examine in daylight.

Results A: see below the sequence of zones present in the chromatograms obtained with the reference solution and the test solution. Furthermore, other faint zones may be present in the upper third and middle part of the chromatogram obtained with the test solution.

Top of the plate	
Tanshinone II_A: a prominent red zone	A prominent red zone (tanshinone II_A) An orange zone
_____	_____
	A faint brownish-green zone
Salvianolic acid B: a faint grey zone	A faint grey zone (salvianolic acid B)
_____	_____
Reference solution	**Test solution**

Detection B: examine in ultraviolet light at 254 nm.

Results: see below the sequence of zones present in the chromatograms obtained with the reference solution and the test solution. Furthermore, other faint zones may be present in the upper third and middle part of the chromatogram obtained with the test solution.

Top of the plate	
Tanshinone II_A: a prominent quenching zone	A prominent quenching zone (tanshinone II_A) A quenching zone
_____	_____
	A quenching zone
Salvianolic acid B: a prominent quenching zone	A prominent quenching zone (salvianolic acid B)
_____	_____
Reference solution	**Test solution**

TESTS

Loss on drying (*2.2.32*): maximum 10.0 per cent, determined on 1.000 g of the powdered herbal drug (355) (*2.9.12*) by drying in an oven at 105 °C for 2 h.

Total ash (*2.4.16*): maximum 10.0 per cent.

Ash insoluble in hydrochloric acid (*2.8.1*): maximum 3.0 per cent.

ASSAY

Liquid chromatography (*2.2.29*). *Protect the solutions from light*.

Test solution. Disperse 0.30 g of the powdered herbal drug (355) (*2.9.12*) in 50.0 mL of a 70 per cent *V/V* solution of *methanol R*. Sonicate for 1 h. Filter through a membrane filter (nominal pore size 0.45 µm).

Reference solution (a). Dissolve 5.0 mg of *tanshinone II_A CRS* in *methanol R* and dilute to 50.0 mL with the same solvent. Dilute 2.0 mL of the solution to 10.0 mL with *methanol R*.

Reference solution (b). Dissolve 5.0 mg of *salvianolic acid B CRS* in *methanol R* and dilute to 25.0 mL with the same solvent.

Reference solution (c). Dissolve 1 mg of *rosmarinic acid R* in *methanol R*, add 5 mL of reference solution (b) and dilute to 10.0 mL with *methanol R*.

Column:

- *size*: *l* = 0.25 m, Ø = 4.6 mm;
- *stationary phase*: *end-capped octadecylsilyl silica gel for chromatography R* (5 µm).

Mobile phase:

- *mobile phase A*: 0.1 per cent *V/V* solution of *anhydrous formic acid R*;
- *mobile phase B*: *acetonitrile for chromatography R*;

Time (min)	Mobile phase A (per cent *V/V*)	Mobile phase B (per cent *V/V*)
0 - 10	79 → 71	21 → 29
10 - 15	71 → 65	29 → 35
15 - 25	65 → 28	35 → 72
25 - 37	28 → 0	72 → 100

Flow rate: 1.0 mL/min.

Detection: spectrophotometer at 280 nm.

Injection: 10 µL.

Relative retention with reference to tanshinone II_A (retention time = about 33 min): rosmarinic acid = about 0.3; salvianolic acid B = about 0.4.

System suitability: reference solution (c):

- *resolution*: minimum 5.0 between the peaks due to rosmarinic acid and salvianolic acid B.

Herbal drugs

Calculate the percentage content of tanshinone II_A using the following expression:

$$\frac{A_1 \times m_2 \times p_1}{A_2 \times m_1 \times 5}$$

A_1 = area of the peak due to tanshinone II_A in the chromatogram obtained with the test solution;

A_2 = area of the peak due to tanshinone II_A in the chromatogram obtained with reference solution (a);

m_1 = mass of the herbal drug to be examined used to prepare the test solution, in grams;

m_2 = mass of *tanshinone II_A CRS* used to prepare reference solution (a), in grams;

p_1 = percentage content of tanshinone II_A in *tanshinone II_A CRS*.

Calculate the percentage content of salvianolic acid B using the following expression:

$$\frac{A_3 \times m_3 \times p_2 \times 2}{A_4 \times m_1}$$

A_3 = area of the peak due to salvianolic acid B in the chromatogram obtained with the test solution;

A_4 = area of the peak due to salvianolic acid B in the chromatogram obtained with reference solution (b);

m_1 = mass of the herbal drug to be examined used to prepare the test solution, in grams;

m_3 = mass of *salvianolic acid B CRS* used to prepare reference solution (b), in grams;

p_2 = percentage content of salvianolic acid B in *salvianolic acid B CRS*.

04/2008:2385

SANGUISORBA ROOT

Sanguisorbae radix

DEFINITION

Whole or fragmented, dried underground parts of *Sanguisorba officinalis* L. without rootlets.

Content: minimum 5.0 per cent of tannins, expressed as pyrogallol ($C_6H_6O_3$; M_r 126.1) (dried drug).

CHARACTERS

The adventitious roots are about 5-25 cm long and up to 2 cm in diameter.

IDENTIFICATION

A. The whole drug consists of the rhizome, often ramified, thick, short, fusiform or cylindrical and the adventitious roots whose surface is reddish-brown or blackish-brown, with longitudinal striations, sometimes with transverse fissures, and showing rootlet scars.

It may also be found as more or less cylindrical fragments up to 2 cm long or elliptical or irregular discs. The fracture is light-coloured and very fibrous.

B. Reduce to a powder (355) (*2.9.12*). The powder is light yellowish-brown. Examine under a microscope using *chloral hydrate solution R*. The powder shows the following diagnostic characters: numerous, whole or fragmented phloem fibres, usually isolated, narrow, sometimes more than 500 µm long and often rough-walled; calcium oxalate cluster crystals, free or inside parenchyma cells; a few reticulate lignified vessels; rare cork fragments. Examine under a microscope using a 50 per cent *V/V* solution of *glycerol R*. The powder shows rounded or ovoid starch granules, single or in groups of 2-4; the diameter of a component granule may reach 30 µm. Some starch granules are found in the parenchyma cells or in cells of the medullary rays.

C. Thin-layer chromatography (*2.2.27*).

Test solution. To 2.0 g of the powdered herbal drug (355) (*2.9.12*) add 50 mL of *water R* and boil under a reflux condenser for 30 min. Cool the solution and centrifuge for 10 min. Shake the supernatant with 2 quantities, each of 15 mL, of *di-isopropyl ether R* saturated with *hydrochloric acid R*. Combine the ether layers. Evaporate to dryness and dissolve the residue in 1.0 mL of *methanol R*. Filter through a polypropylene syringe filter (nominal pore size 0.45 µm).

Reference solution. Dissolve 5 mg of *gallic acid R* and 20 mg of *resorcinol R* in 20 mL of *methanol R*.

Plate: *TLC silica gel F_{254} plate R* (5-40 µm) [or *TLC silica gel F_{254} plate R* (2-10 µm)].

Mobile phase: *anhydrous formic acid R*, *ethyl acetate R*, *toluene R* (10:30:60 *V/V/V*).

Application: 10 µL [or 4 µL] as bands.

Development: over a path of 10 cm [or 6 cm].

Drying: in air.

Detection A: examine in ultraviolet light at 254 nm.

Results A: see below the sequence of quenching zones present in the chromatograms obtained with the reference solution and the test solution. Furthermore, other faint quenching zones may be present in the chromatogram obtained with the test solution.

Top of the plate	
	A quenching zone
Resorcinol: a quenching zone	
	A quenching zone
Gallic acid: a quenching zone	A quenching zone (gallic acid)
	A quenching zone
	A quenching zone
Reference solution	**Test solution**

Detection B: spray with a 10 g/L solution of *ferric chloride R* in *anhydrous ethanol R* and heat at 100-105 °C for 15 min; examine in daylight.

Results B: see below the sequence of the zones present in the chromatograms obtained with the reference solution and the test solution. Furthermore, other faint zones may be present in the chromatogram obtained with the test solution.

Top of the plate	
Resorcinol: a brown zone	
	A blackish-blue zone
Gallic acid: a blackish-blue zone	A blackish-blue zone (gallic acid)
	A blackish-blue zone
Reference solution	**Test solution**

TESTS

Loss on drying (*2.2.32*): maximum 12.0 per cent, determined on 1.000 g of the powdered herbal drug (355) (*2.9.12*) by drying in an oven at 105 °C.

Herbal drugs

Total ash (*2.4.16*): maximum 10.0 per cent.

Ash insoluble in hydrochloric acid (*2.8.1*): maximum 2.0 per cent.

ASSAY

Tannins (*2.8.14*). Use 0.500 g of the powdered herbal drug (180) (*2.9.12*).

01/2014:2579

SAW PALMETTO EXTRACT

Sabalis serrulatae extractum

DEFINITION

Extract produced from *Saw palmetto fruit (1848)*.

Content:

- *total fatty acids*: minimum 80.0 per cent (anhydrous extract);
- *lauric acid* ($C_{12}H_{24}O_2$; M_r 200.3): minimum 23.0 per cent (anhydrous extract);
- *total sterols, expressed as β-sitosterol* ($C_{29}H_{50}O$; M_r 414.7): minimum 0.20 per cent (anhydrous extract);
- *β-sitosterol* ($C_{29}H_{50}O$; M_r 414.7): minimum 0.10 per cent (anhydrous extract).

PRODUCTION

The extract is produced from the herbal drug by a suitable procedure using ethanol (minimum 90 per cent *V/V*), or supercritical carbon dioxide or a mixture of mainly *n*-hexane and methylpentanes (bp: 65-70 °C).

CHARACTERS

Appearance: the ethanol extract is a dark greenish-brown, oily liquid; the supercritical carbon dioxide extract is a yellowish-brown or orange-brown, oily liquid; the hexane extract is a yellowish-green to orange-yellow, oily liquid.

Odour: strong but not rancid.

IDENTIFICATION

First identification: *B*.

Second identification: *A*.

A. Thin-layer chromatography (*2.2.27*).

Test solution. Dissolve 0.25 g of the extract to be examined in 20 mL of *ethanol (96 per cent) R*.

Reference solution. Dissolve 4 mg of *β-amyrin R* and 10 mg of *β-sitosterol R* in 10 mL of *ethanol (96 per cent) R*.

Plate: *TLC silica gel plate R* (2-10 µm).

Mobile phase: *anhydrous acetic acid R*, *ethyl acetate R*, *toluene R* (1:30:70 *V/V/V*).

Application: 2 µL as bands of 8 mm.

Development: over a path of 6 cm.

Drying: in air.

Detection: treat with *anisaldehyde solution R*, heat at 100-105 °C for 5-10 min and examine in daylight.

Results: see below the sequence of zones present in the chromatograms obtained with the reference solution and the test solution. Furthermore, other faint zones may be present, especially in the lower third, in the chromatogram obtained with the test solution.

Top of the plate	
	A blue zone
	A blue zone
———	———
β-Amyrin: a blue zone	A strong bluish-violet zone
β-Sitosterol: a blue zone	
———	———
Reference solution	**Test solution**

B. Examine the chromatograms obtained in the assay of total fatty acids.

Results: the peaks due to methyl caproate, methyl caprylate, methyl caprate, methyl laurate, methyl myristate, methyl palmitoleate, methyl palmitate, methyl linoleate, methyl linolenate, methyl oleate and methyl stearate in the chromatogram obtained with the test solution are similar in retention time to the corresponding peaks in the chromatogram obtained with reference solution (b); the principal peaks are due to methyl laurate and methyl oleate.

TESTS

Water (*2.5.12, Method A*): maximum 3.0 per cent, determined on 0.5 g.

Relative density (*2.2.5*): 0.850 to 0.950.

Refractive index (*2.2.6*): 1.40 to 1.50.

Acid value (*2.5.1*): 150.0 to 220.0.

Iodine value (*2.5.4, Method A*): 30.0 to 60.0.

Peroxide value (*2.5.5*): maximum 5.0.

Saponification value (*2.5.6*): 220.0 to 250.0.

Solvents. Residual solvents are controlled as described in chapter *5.4*, unless otherwise justified and authorised.

ASSAY

Total fatty acids. Gas chromatography (*2.2.28*).

Internal standard solution. Dissolve 0.47 g of *methyl margarate R* in 20 mL of *dimethylformamide R* and dilute to 100.0 mL with the same solvent.

Test solution. Disperse 0.25 g of the extract to be examined in 10 mL of *dimethylformamide R*. Add 4.0 mL of the internal standard solution and dilute to 25.0 mL with *dimethylformamide R*. Mix 0.4 mL of this solution and 0.6 mL of a 18.84 g/L solution of *trimethylsulfonium hydroxide R* in *methanol R*.

Reference solution (a). Dissolve 0.699 g of *lauric acid CRS* and 0.870 g of *oleic acid CRS* in *dimethylformamide R* and dilute to 10.0 mL with the same solvent. To 1.0 mL of the solution add 4.0 mL of the internal standard solution and dilute to 25.0 mL with *dimethylformamide R*. Mix 0.4 mL of this solution and 0.6 mL of a 18.84 g/L solution of *trimethylsulfonium hydroxide R* in *methanol R*.

Reference solution (b). Disperse 0.25 g of *saw palmetto extract HRS* in 10 mL of *dimethylformamide R*. Add 4.0 mL of the internal standard solution and dilute to 25.0 mL with *dimethylformamide R*. Mix 0.4 mL of this solution and 0.6 mL of a 18.84 g/L solution of *trimethylsulfonium hydroxide R* in *methanol R*.

Column:

- *material*: fused silica;
- *size*: *l* = 25 m, Ø = 0.20 mm;
- *stationary phase*: *poly(dimethyl)siloxane R* (film thickness 0.33 µm).

Carrier gas: *helium for chromatography R*.

Herbal drugs

Flow rate: 0.5 mL/min.

Split ratio: 1:40.

Temperature:

	Time (min)	Temperature (°C)
Column	0 - 2	150
	2 - 7	150 → 190
	7 - 12	190
	12 - 22	190 → 220
	22 - 32	220
Injection port		300
Detector		300

Detection: flame ionisation.

Injection: 1 µL.

Identification of peaks: use the chromatogram supplied with *saw palmetto extract HRS* and the chromatogram obtained with reference solution (b) to identify the peaks due to methyl caproate, methyl caprylate, methyl caprate, methyl laurate, methyl myristate, methyl palmitoleate, methyl palmitate, methyl linoleate, methyl linolenate, methyl oleate, methyl stearate and methyl margarate.

System suitability: reference solution (b):

– *peak-to-valley ratio*: minimum 1.2, where H_p = height above the baseline of the peak due to methyl linolenate and H_v = height above the baseline of the lowest point of the curve separating this peak from the peak due to methyl linoleate.

Calculate the percentage content of total fatty acids, where caproic, caprylic, capric, lauric, myristic, palmitoleic, palmitic and stearic acids are expressed as lauric acid ($C_{12}H_{24}O_2$; M_r 200.3) and linoleic, linolenic and oleic acids are expressed as oleic acid ($C_{18}H_{34}O_2$; M_r 282.5), using the following expression:

$$\frac{A_1 \times A_4 \times m_2 \times p_1 \times 0.1}{A_2 \times A_3 \times m_1} + \frac{A_5 \times A_4 \times m_3 \times p_2 \times 0.1}{A_6 \times A_3 \times m_1}$$

A_1 = sum of the areas of the peaks due to methyl caproate, methyl caprylate, methyl caprate, methyl laurate, methyl myristate, methyl palmitoleate, methyl palmitate and methyl stearate in the chromatogram obtained with the test solution;

A_2 = area of the peak due to methyl laurate in the chromatogram obtained with reference solution (a);

A_3 = area of the peak due to methyl margarate in the chromatogram obtained with the test solution;

A_4 = area of the peak due to methyl margarate in the chromatogram obtained with reference solution (a);

A_5 = sum of the areas of the peaks due to methyl linoleate, methyl linolenate and methyl oleate in the chromatogram obtained with the test solution;

A_6 = area of the peak due to methyl oleate in the chromatogram obtained with reference solution (a);

m_1 = mass of the extract to be examined used to prepare the test solution, in grams;

m_2 = mass of *lauric acid CRS* used to prepare reference solution (a), in grams;

m_3 = mass of *oleic acid CRS* used to prepare reference solution (a), in grams;

p_1 = percentage content of lauric acid in *lauric acid CRS*;

p_2 = percentage content of oleic acid in *oleic acid CRS*.

Calculate the percentage content of lauric acid using the following expression:

$$\frac{A_1 \times A_4 \times m_2 \times p \times 0.1}{A_2 \times A_3 \times m_1}$$

A_1 = area of the peak due to methyl laurate in the chromatogram obtained with the test solution;

A_2 = area of the peak due to methyl laurate in the chromatogram obtained with reference solution (a);

A_3 = area of the peak due to methyl margarate in the chromatogram obtained with the test solution;

A_4 = area of the peak due to methyl margarate in the chromatogram obtained with reference solution (a);

m_1 = mass of the extract to be examined used to prepare the test solution, in grams;

m_2 = mass of *lauric acid CRS* used to prepare reference solution (a), in grams;

p = percentage content of lauric acid in *lauric acid CRS*.

Total sterols. Gas chromatography (*2.2.28*).

Derivatisation solution (a): *chlorotrimethylsilane R*, *N,O-bis(trimethylsilyl)acetamide R*, *N-trimethylsilylimidazole R* (2:3:3 *V/V/V*).

Derivatisation solution (b): derivatisation solution (a), *N,O-bis(trimethylsilyl)trifluoroacetamide R*, *pyridine R* (1:1:1 *V/V/V*).

Internal standard solution. Dissolve 0.25 g of *cholesterol R* in 25.0 mL of *methylene chloride R*.

Test solution. Introduce 1.0 mL of the internal standard solution into a 50 mL round-bottomed flask and evaporate to dryness. Place 3.35 g of the extract to be examined, accurately weighed, into the round-bottomed flask and add 20 mL of a solution prepared as follows: dissolve 130 g of *potassium hydroxide R* in 200 mL of *water R* and dilute to 1000 mL with *methanol R*. Heat under reflux for 2 h, transfer quantitatively to a flask and dilute to 25.0 mL with *water R*. Apply 3.0 mL of this solution to a cartridge containing *diatomaceous earth R* capable of holding 3 mL of aqueous phase. Absorb the solution into the column by applying vacuum. Maintain the vacuum for at least 20 min, until the column returns to room temperature, indicating that the methanol is completely evaporated. Rinse the column with 90 mL of *methylene chloride R* and evaporate the eluate to dryness. Dissolve the residue in 1.0 mL of derivatisation solution (b).

Reference solution (a). To 9.0 mg of *β-sitosterol CRS* add 1.0 mL of the internal standard solution and dilute to 5.0 mL with *methylene chloride R*. Evaporate 0.6 mL of this solution to dryness under a stream of *nitrogen R*. Dissolve the residue in 1.0 mL of derivatisation solution (b).

Reference solution (b). Introduce 1.0 mL of the internal standard solution into a 50 mL round-bottomed flask and evaporate to dryness. Place 3.35 g of *saw palmetto extract HRS*, accurately weighed, into the round-bottomed flask and add 20 mL of a solution prepared as follows: dissolve 130 g of *potassium hydroxide R* in 200 mL of *water R* and dilute to 1000 mL with *methanol R*. Heat under reflux for 2 h, transfer quantitatively to a flask and dilute to 25.0 mL with *water R*. Apply 3.0 mL of this solution to a cartridge containing *diatomaceous earth R* capable of holding 3 mL of aqueous phase. Absorb the solution into the column by applying vacuum. Maintain the vacuum for at least 20 min, until the column returns to room temperature, indicating that

the methanol is completely evaporated. Rinse the column with 90 mL of *methylene chloride R* and evaporate the eluate to dryness. Dissolve the residue in 1.0 mL of derivatisation solution (b).

Column:

- *material*: fused silica;
- *size*: *l* = 25 m, Ø = 0.20 mm;
- *stationary phase*: *poly(dimethyl)siloxane R* (film thickness 0.33 µm).

Carrier gas: *helium for chromatography R*.

Flow rate: 0.5 mL/min.

Split ratio: 1:40.

	Time (min)	Temperature (°C)
Column	0 - 3	200
	3 - 13	200 → 300
	13 - 35	300
Injection port		325
Detector		325

Detection: flame ionisation.

Injection: 1 µL.

Identification of peaks: use the chromatogram supplied with *saw palmetto extract HRS* and the chromatogram obtained with reference solution (b) to identify the peaks due to the trimethylsilyl derivatives of cholesterol, campesterol, stigmasterol, β-sitosterol and stigmastanol.

System suitability: reference solution (b):

- *resolution*: minimum 1.6 between the peaks due to the trimethylsilyl derivatives of β-sitosterol and stigmastanol.

Calculate the percentage content of total sterols (campesterol, stigmasterol, β-sitosterol and stigmastanol), expressed as β-sitosterol, using the following expression:

$$\frac{A_1 \times A_4 \times m_2 \times p}{A_2 \times A_3 \times m_1}$$

A_1 = sum of the areas of the peaks due to the trimethylsilyl derivatives of campesterol, stigmasterol, β-sitosterol and stigmastanol in the chromatogram obtained with the test solution;

A_2 = area of the peak due to the trimethylsilyl derivative of β-sitosterol in the chromatogram obtained with reference solution (a);

A_3 = area of the peak due to the trimethylsilyl derivative of cholesterol in the chromatogram obtained with the test solution;

A_4 = area of the peak due to the trimethylsilyl derivative of cholesterol in the chromatogram obtained with reference solution (a);

m_1 = mass of the extract to be examined used to prepare the test solution, in grams;

m_2 = mass of *β-sitosterol CRS* used to prepare reference solution (a), in grams;

p = percentage content of β-sitosterol in *β-sitosterol CRS*.

Calculate the percentage content of β-sitosterol using the following expression:

$$\frac{A_1 \times A_4 \times m_2 \times p}{A_2 \times A_3 \times m_1}$$

A_1 = area of the peak due to the trimethylsilyl derivative of β-sitosterol in the chromatogram obtained with the test solution;

A_2 = area of the peak due to the trimethylsilyl derivative of β-sitosterol in the chromatogram obtained with reference solution (a);

A_3 = area of the peak due to the trimethylsilyl derivative of cholesterol in the chromatogram obtained with the test solution;

A_4 = area of the peak due to the trimethylsilyl derivative of cholesterol in the chromatogram obtained with reference solution (a);

m_1 = mass of the extract to be examined used to prepare the test solution, in grams;

m_2 = mass of *β-sitosterol CRS* used to prepare reference solution (a), in grams;

p = percentage content of β-sitosterol in *β-sitosterol CRS*.

07/2012:1848

SAW PALMETTO FRUIT

Sabalis serrulatae fructus

DEFINITION

Dried ripe fruit of *Serenoa repens* (W. Bartram) Small (syn. *Sabal serrulata* (Michaux) T. Nuttal ex Schultes & Schultes).

Content: minimum 11.0 per cent of total fatty acids (dried drug).

CHARACTERS

Odour: strong but not rancid.

IDENTIFICATION

First identification: A, B, D.

Second identification: A, B, C.

A. The fruit is an ovoid or subspherical drupe, with a dark brown or blackish, roughly wrinkled surface and more or less coppery sheen, up to 2.5 cm long and 1.5 cm in diameter. The apex sometimes bears the remains of the style and tubular calyx, with 3 teeth, and the base bears a small depression with the scar of the stalk. The epicarp and underlying mesocarp form a thin fragile layer, which partially peels off, revealing the thin, hard, pale brown endocarp, which is fibrous and easily separable. The seed is irregularly spherical or ovoid, up to 12 mm long and 8 mm in diameter, with a hard, smooth or finely pitted surface which is reddish-brown with a paler, raised and membranous area over the raphe and micropyle; cut transversely, the seed has a thin testa, narrow perisperm and a large area of dense, horny, greyish-white endosperm, with the embryo positioned to one side.

B. Microscopic examination (*2.8.23*). Reduce to a powder (710) (*2.9.12*). The powder is reddish or blackish-brown and oily. Examine under a microscope using *chloral hydrate solution R*. The powder shows the following diagnostic characters: fragments of epicarp composed of several layers of thin-walled, reddish-brown, pigmented, polyhedral cells (10-40 µm) which are strongly cuticularised; those of the outer layers are much smaller than those of the inner layers. Parenchyma cells of the mesocarp may be large and filled with oil droplets, or smaller and containing nodules of silica. Groups of xylem tissue of the mesocarp show small lignified, annular or spirally thickened vessels. Stone cells of the mesocarp (20-200 µm) may be found scattered, usually singly but sometimes in small groups, the walls are moderately thickened, distinctly striated and finely pitted. Fragments of endocarp contain groups of elongated

sclereids about 300 µm long, with strongly thickened walls and numerous pits. The seed testa consists of small, thin-walled cells with brownish contents and underlying sclereids; albumen cells are thick-walled with large conspicuous pits and contain aleurone grains and fixed oil.

C. Thin-layer chromatography (*2.2.27*).

Test solution. To 1.5 g of the powdered herbal drug (710) (*2.9.12*), add 20 mL of *ethanol (96 per cent) R* and stir for 15 min. Filter.

Reference solution. Dissolve 4 mg of *β-amyrin R* and 10 mg of *β-sitosterol R* in 10 mL of *ethanol (96 per cent) R*.

Plate: *TLC silica gel plate R* (5-40 µm) [or *TLC silica gel plate R* (2-10 µm)].

Mobile phase: *acetic acid R*, *ethyl acetate R*, *toluene R* (1:30:70 *V/V/V*).

Application: 10 µL [or 2 µL] as bands of 10 mm [or 8 mm].

Development: over a path of 10 cm [or 6 cm].

Drying: in air.

Detection: treat with *anisaldehyde solution R*; heat at 100-105 °C for 5-10 min; examine in daylight.

Results: see below the sequence of zones present in the chromatograms obtained with the reference solution and the test solution. Furthermore, other faint zones may be present, especially in the lower third, in the chromatogram obtained with the test solution.

Top of the plate	
	A strong blue zone
———	———
	2 faint blue zones
β-Amyrin: a blue zone	
	A strong bluish-violet zone
β-Sitosterol: a blue zone	A faint blue zone
———	———
	A faint blue zone
Reference solution	**Test solution**

D. Examine the chromatograms obtained in the assay of total fatty acids.

Results: the peaks due to caproic, caprylic, capric, lauric, myristic, palmitoleic, palmitic, linoleic, linolenic, oleic and stearic acids in the chromatogram obtained with the test solution are similar in retention time to the corresponding peaks in the chromatogram obtained with reference solution (b); the principal peaks are due to lauric acid and oleic acid.

TESTS

Loss on drying (*2.2.32*): maximum 12.0 per cent, determined on 1.000 g of the powdered herbal drug (710) (*2.9.12*) by drying in an oven at 105 °C for 2 h.

Total ash (*2.4.16*): maximum 5.0 per cent.

ASSAY

Total fatty acids. Gas chromatography (*2.2.28*).

Internal standard solution. Dissolve 0.47 g of *methyl margarate R* in 20.0 mL of *dimethylformamide R* and dilute to 100.0 mL with the same solvent.

Test solution. Reduce 50 g of the herbal drug to a powder (200) (*2.9.12*). Disperse 4.00 g of the powdered herbal drug in 60 mL of *dimethylformamide R*. Sonicate for 15 min and then shake for 30 min. Dilute to 100.0 mL with *dimethylformamide R*. Allow to stand for a few minutes and filter. To 20.0 mL of this solution add 4.0 mL of the internal standard solution and dilute to 25.0 mL with *dimethylformamide R*. Mix 0.4 mL of this solution and 0.6 mL of an 18.84 g/L solution of *trimethylsulfonium hydroxide R* in *methanol R*.

Reference solution (a). Dissolve 0.699 g of *lauric acid CRS* and 0.870 g of *oleic acid CRS* in *dimethylformamide R* and dilute to 10.0 mL with the same solvent. To 1.0 mL of the solution add 4.0 mL of the internal standard solution and dilute to 25.0 mL with *dimethylformamide R*. Mix 0.4 mL of this solution and 0.6 mL of an 18.84 g/L solution of *trimethylsulfonium hydroxide R* in *methanol R*.

Reference solution (b). Disperse 0.25 g of *saw palmetto extract HRS* in 10 mL of *dimethylformamide R*. Add 4.0 mL of the internal standard solution and dilute to 25.0 mL with *dimethylformamide R*. Mix 0.4 mL of this solution and 0.6 mL of an 18.84 g/L solution of *trimethylsulfonium hydroxide R* in *methanol R*.

Column:

- *material*: fused silica;
- *size*: *l* = 25 m, Ø = 0.20 mm;
- *stationary phase*: *poly(dimethyl)siloxane R* (film thickness 0.33 µm).

Carrier gas: *helium for chromatography R*.

Flow rate: 0.5 mL/min.

Split ratio: 1:40.

Temperature:

	Time (min)	Temperature (°C)
Column	0 - 2	150
	2 - 7	150 → 190
	7 - 12	190
	12 - 22	190 → 220
	22 - 32	220
Injection port		300
Detector		300

Detection: flame ionisation.

Injection: 1 µL.

Identification of peaks: use the chromatogram supplied with *saw palmetto extract HRS* and the chromatogram obtained with reference solution (b) to identify the peaks due to caproic, caprylic, capric, lauric, myristic, palmitoleic, palmitic, linoleic, linolenic, oleic and stearic acids and methyl margarate.

System suitability: reference solution (b):

- *peak-to-valley ratio*: minimum 1.2, where H_p = height above the baseline of the peak due to linolenic acid and H_v = height above the baseline of the lowest point of the curve separating this peak from the peak due to linoleic acid.

Calculate the percentage content of total fatty acids, where caproic, caprylic, capric, lauric, myristic, palmitoleic, palmitic and stearic acids are expressed as lauric acid ($C_{12}H_{24}O_2$; M_r 200.3) and linoleic, linolenic and oleic acids are expressed as oleic acid ($C_{18}H_{34}O_2$; M_r 282.5), using the following expression:

$$\frac{A_1 \times A_4 \times m_2 \times p_1 \times 0.5}{A_2 \times A_3 \times m_1} + \frac{A_5 \times A_4 \times m_3 \times p_2 \times 0.5}{A_6 \times A_3 \times m_1}$$

A_1 = sum of the areas of the peaks due to caproic, caprylic, capric, lauric, myristic, palmitoleic, palmitic and stearic acids in the chromatogram obtained with the test solution;

A_2 = area of the peak due to lauric acid in the chromatogram obtained with reference solution (a);

A_3 = area of the peak due to methyl margarate in the chromatogram obtained with the test solution;

A_4 = area of the peak due to methyl margarate in the chromatogram obtained with reference solution (a);

A_5 = sum of the areas of the peaks due to linoleic, linolenic and oleic acids in the chromatogram obtained with the test solution;

A_6 = area of the peak due to oleic acid in the chromatogram obtained with reference solution (a);

m_1 = mass of the herbal drug to be examined used to prepare the test solution, in grams;

m_2 = mass of *lauric acid CRS* used to prepare reference solution (a), in grams;

m_3 = mass of *oleic acid CRS* used to prepare reference solution (a), in grams;

p_1 = percentage content of lauric acid in *lauric acid CRS*;

p_2 = percentage content of oleic acid in *oleic acid CRS*.

01/2009:2428

SCHISANDRA FRUIT

Schisandrae chinensis fructus

DEFINITION

Whole, dried or steamed and dried, ripe fruit of *Schisandra chinensis* (Turcz.) Baill.

Content: minimum 0.40 per cent of schisandrin ($C_{24}H_{32}O_7$; M_r 432.5) (dried drug).

IDENTIFICATION

A. The berry is more or less spherical, up to 8 mm in diameter; red, reddish-brown or blackish outer surface, sometimes covered in a whitish frost; strongly shrivelled pericarp; presence of 1-2 reniform, yellowish-brown, lustrous seeds, with thin seed-coat.

B. Reduce to a powder (355) (*2.9.12*). The powder is reddish-brown. Examine under a microscope using *chloral hydrate solution R*. The powder shows the following diagnostic characters: reddish-brown fragments of pericarp, consisting of 1 layer of thin-walled epicarp cells, accompanied by sparse oil cells and several layers of ovoid, more-or-less flattened mesocarp cells; fragments of the outer testa of the seed consisting of thick-walled, finely channelled sclereids, polygonal in surface view (15-50 µm in diameter) and in palisade arrangement in side view; fragments of the inner testa with sclereids, isolated or in small groups, about 80 µm in diameter, with slightly thickened and markedly channelled walls; fragments of endosperm consisting of polyhedral cells containing oil droplets and aleurone grains. Examine under a microscope using a 50 per cent *V/V* solution of *glycerol R*: the powder shows parenchymatous cells of the mesocarp containing numerous small, round starch granules.

C. Examine the chromatograms obtained in the test for *Schisandra sphenanthera*.

Results A: see below the sequence of quenching zones present in the chromatograms obtained with the reference solution and the test solution. Furthermore, other weak quenching zones may be present in the chromatogram obtained with the test solution.

Top of the plate	
γ-Schisandrin: a quenching zone	A quenching zone (γ-schisandrin)
	A weak quenching zone
Schisandrin: a quenching zone	A quenching zone (schisandrin)
Reference solution	**Test solution**

Results B: see below the sequence of zones present in the chromatograms obtained with the reference solution and the test solution. Furthermore, other faint zones may be present in the chromatogram obtained with the test solution.

Top of the plate	
γ-Schisandrin: a brown zone	A brown zone (γ-schisandrin)
Schisandrin: an intense, brownish-green zone	An intense, brownish-green zone (schisandrin)
Reference solution	**Test solution**

TESTS

Schisandra sphenanthera. Thin-layer chromatography (*2.2.27*).

Test solution. To 2.5 g of the powdered herbal drug (355) (*2.9.12*) add 10 mL of *methanol R*. Extract at 25 °C in an ultrasonic bath for 5 min and centrifuge.

Reference solution. Dissolve 5 mg of *schisandrin R* and 5 mg of *γ-schisandrin R* in 5 mL of *methanol R*.

Plate: *TLC silica gel F_{254} plate R* (5-40 µm) [or *TLC silica gel F_{254} plate R* (2-10 µm)].

Mobile phase: *acetic acid R*, *ethyl acetate R*, *toluene R* (2:22:46 *V/V/V*).

Application: 5 µL [or 2 µL] as bands of 10 mm [or 6 mm].

Development: over a path of 10 cm [or 7 cm].

Drying: in air.

Detection A: examine in ultraviolet light at 254 nm.

Detection B: spray with a 100 g/L solution of *sulfuric acid R* in *methanol R* and heat in an oven at 120 °C for 7 min; examine in daylight.

Results B: the chromatogram obtained with the test solution shows a zone due to schisandrin and a zone due to γ-schisandrin; the chromatogram shows no intense violet-pink zone in the middle third.

Loss on drying (*2.2.32*): maximum 10.0 per cent, determined on 1.000 g of the powdered herbal drug (355) (*2.9.12*) by drying in an oven at 105 °C for 2 h.

Total ash (*2.4.16*): maximum 6.0 per cent.

ASSAY

Liquid chromatography (*2.2.29*).

Herbal drugs

Test solution. Weigh 1.250 g of the powdered herbal drug (355) (*2.9.12*) into a 250 mL conical flask, add 90 mL of *methanol R* and sonicate for 30 min. Filter the solution into a volumetric flask, add 10 mL of *methanol R* whilst rinsing the filter and dilute to 100.0 mL with the same solvent.

Reference solution. Dissolve 5.0 mg of *schisandrin R* in *methanol R* and dilute to 100.0 mL with the same solvent.

Column:
- *size*: *l* = 0.25 m, Ø = 4.6 mm;
- *stationary phase*: *end-capped octadecylsilyl silica gel for chromatography R*;
- *temperature*: 25 °C.

Mobile phase:
- *mobile phase A*: *water R*, *methanol R* (35:65 *V/V*);
- *mobile phase B*: *methanol R*;

Time (min)	Mobile phase A (per cent *V/V*)	Mobile phase B (per cent *V/V*)
0 - 10	100	0
10 - 16	100 → 58	0 → 42
16 - 26	58	42

Flow rate: 1 mL/min.

Detection: spectrophotometer at 250 nm.

Injection: 10 µL.

Retention time: schisandrin = about 8 min.

System suitability:
- *number of theoretical plates*: minimum 5000, calculated for the peak due to schisandrin in the chromatogram obtained with the reference solution.

Calculate the percentage content of schisandrin using the following expression:

$$\frac{A_1 \times m_2 \times p}{A_2 \times m_1}$$

A_1 = area of the peak due to schisandrin in the chromatogram obtained with the test solution;

A_2 = area of the peak due to schisandrin in the chromatogram obtained with the reference solution;

m_1 = mass of the herbal drug to be examined used to prepare the test solution, in grams;

m_2 = mass of *schisandrin R* used to prepare the reference solution, in grams;

p = percentage content of schisandrin in *schisandrin R*.

01/2008:0202

SENEGA ROOT

Polygalae radix

DEFINITION

Dried and usually fragmented root and root crown of *Polygala senega* L. or of certain other closely related species or of a mixture of these *Polygala* species.

CHARACTERS

Faint, sweet odour, slightly rancid or reminiscent of methyl salicylate.

Reduced to a powder, it is irritant and sternutatory. Shaken with water, the powder produces a copious froth.

IDENTIFICATION

A. The root crown is greyish-brown and wider than the root; it forms an irregular head consisting of numerous remains of stems and tightly packed purplish-brown buds. The taproot is brown or yellow, occasionally branched, sometimes flexuous, usually tortuous and without secondary roots, except in the Japanese varieties and species, which contain numerous fibrous rootlets. The diameter is usually 1-8 mm at the crown, gradually tapering to the tip; the surface is transversely and longitudinally striated and often shows a more or less distinct decurrent, elongated spiral keel. The fracture is short and shows a yellowish cortex of varying thickness surrounding a paler central woody area somewhat circular or irregular in shape depending on the species.

B. Examine under a microscope using *chloral hydrate solution R*. The transverse section of the root shows the following diagnostic characters: cork formed from several layers of thin-walled cells, phelloderm of slightly collenchymatous cells containing droplets of oil; the phloem and xylem arrangement is usually normal, especially near the crown but where a keel is present this is formed by increased development of phloem; other anomalous secondary development sometimes occurs, resulting in the formation of 1 or 2 large wedge-shaped rays in the phloem and xylem, the parenchymatous cells of which contain droplets of oil. The xylem is usually central and consists of vessels up to 60 µm in diameter associated with numerous thin-walled tracheids and a few small lignified parenchymatous cells.

C. Reduce to a powder (355) (*2.9.12*). The powder is light brown. Examine under a microscope using *chloral hydrate solution R*. The powder shows the following diagnostic characters: longitudinal fragments of lignified tissue made up of pitted tracheids and somewhat larger vessels with numerous bordered pits or with reticulate thickening; yellowish parenchyma and collenchymatous cells containing droplets of oil; occasional fragments of cork, and of epidermal tissue with stomata and unicellular trichomes from the bud scales. Crystals and stone cells are absent.

D. Thin-layer chromatography (*2.2.27*).

Test solution. To 1.0 g of the powdered herbal drug (355) (*2.9.12*) add 10 mL of *ethanol (70 per cent V/V) R*, boil under a reflux condenser for 15 min, filter and allow to cool.

Reference solution. Dissolve 10 mg of *aescin R* in *ethanol (70 per cent V/V) R* and dilute to 10 mL with the same solvent.

Plate: *TLC silica gel G plate R*.

Mobile phase: the upper layer of a mixture of 10 volumes of *glacial acetic acid R*, 40 volumes of *water R* and 50 volumes of *butanol R*.

Application: 10 µL of the test solution and 10 µL and 40 µL of the reference solution, as bands of 20 mm by 3 mm.

Development: over a path of 12 cm.

Drying: at 100-105 °C.

Detection A: spray with about 10 mL of *anisaldehyde solution R* for a plate 200 mm square and heat again at 100-105 °C until red zones due to saponosides appear in the chromatogram obtained with the test solution.

Results A: in the chromatogram obtained with the test solution, 3-5 red zones appear in the lower and middle parts, similar in position to the grey-violet zones due to aescin in the chromatogram obtained with the reference solution.

Detection B: spray with about 10 mL of a 200 g/L solution of *phosphomolybdic acid R* in *anhydrous ethanol R* and heat at 100-105 °C until the zones due to saponosides become blue.

Results B: the intensity and size of the zones in the chromatogram obtained with the test solution are between those of the 2 bands due to aescin in the chromatograms obtained with 10 µL and 40 µL of the reference solution.

TESTS

Total ash (*2.4.16*): maximum 6.0 per cent.

Herbal drugs

Ash insoluble in hydrochloric acid (*2.8.1*): maximum 3.0 per cent.

STORAGE

Store protected from humidity.

01/2008:0206
corrected 6.0

SENNA LEAF

Sennae folium

DEFINITION

Dried leaflets of *Cassia senna* L. (*C. acutifolia* Delile), known as Alexandrian or Khartoum senna, or *Cassia angustifolia* Vahl, known as Tinnevelly senna, or a mixture of the 2 species.

Content: minimum 2.5 per cent of hydroxyanthracene glycosides, expressed as sennoside B ($C_{42}H_{38}O_{20}$; M_r 863) (dried drug).

CHARACTERS

Slight characteristic odour.

IDENTIFICATION

A. *C. senna* occurs as greyish-green or brownish-green, thin, fragile leaflets, lanceolate, mucronate, asymmetrical at the base, usually 15-40 mm long and 5-15 mm wide, the maximum width being at a point slightly below the centre; the lamina is slightly undulant with both surfaces covered with fine, short trichomes. Pinnate venation is visible mainly on the lower surface, with lateral veins leaving the midrib at an angle of about 60° and anastomosing to form a ridge near the margin.

   Stomatal index (*2.8.3*): 10-12.5-15.

   C. angustifolia occurs as yellowish-green or brownish-green leaflets, elongated and lanceolate, slightly asymmetrical at the base, usually 20-50 mm long and 7-20 mm wide at the centre. Both surfaces are smooth with a very small number of short trichomes and are frequently marked with transverse or oblique lines.

   Stomatal index (*2.8.3*): 14-17.5-20

B. Reduce to a powder (355) (*2.9.12*). The powder is light green or greenish-yellow. Examine under a microscope using *chloral hydrate solution R*. The powder shows the following diagnostic characters: polygonal epidermal cells showing paracytic stomata (*2.8.3*); unicellular trichomes, conical in shape, with warted walls, isolated or attached to fragments of epidermis; fibres with a crystal sheath of prismatic crystals of calcium oxalate; cluster crystals isolated or in fragments of parenchyma.

C. Thin-layer chromatography (*2.2.27*).

   Test solution. To 0.5 g of the powdered herbal drug (180) (*2.9.12*) add 5 mL of a mixture of equal volumes of *ethanol (96 per cent) R* and *water R* and heat to boiling. Centrifuge and use the supernatant.

   Reference solution. Dissolve 10 mg of *senna extract CRS* in 1 mL of a mixture of equal volumes of *ethanol (96 per cent) R* and *water R* (a slight residue remains).

   Plate: *TLC silica gel G plate R.*

   Mobile phase: *glacial acetic acid R*, *water R*, *ethyl acetate R*, *propanol R* (1:30:40:40 *V/V/V/V*).

   Application: 10 µL, as bands of 20 mm by 2 mm.

   Development: over a path of 10 cm.

   Drying: in air.

   Detection: spray with a 20 per cent *V/V* solution of *nitric acid R* and heat at 120 °C for 10 min. Allow to cool and spray with a 50 g/L solution of *potassium hydroxide R* in *alcohol (50 per cent V/V) R* until the zones appear.

   Results: the principal zones in the chromatogram obtained with the test solution are similar in position (sennosides B, A, D and C in the order of increasing R_F value), colour and size to the principal zones in the chromatogram obtained with the reference solution. Between the zones due to sennosides D and C a red zone due to rhein-8-glucoside may be visible.

D. Place about 25 mg of the powdered herbal drug (180) (*2.9.12*) in a conical flask and add 50 mL of *water R* and 2 mL of *hydrochloric acid R*. Heat in a water-bath for 15 min, cool and shake with 40 mL of *ether R*. Separate the ether layer, dry over *anhydrous sodium sulfate R*, evaporate 5 mL to dryness and to the cooled residue add 5 mL of *dilute ammonia R1*. A yellow or orange colour develops. Heat on a water-bath for 2 min. A reddish-violet colour develops.

TESTS

Foreign matter (*2.8.2*): maximum 3 per cent of foreign organs and maximum 1 per cent of foreign elements.

Loss on drying (*2.2.32*): maximum 12.0 per cent, determined on 1.000 g of the powdered herbal drug (355) (*2.9.12*) by drying in an oven at 105 °C for 2 h.

Total ash (*2.4.16*): maximum 12.0 per cent.

Ash insoluble in hydrochloric acid (*2.8.1*): maximum 2.5 per cent.

ASSAY

Carry out the assay protected from bright light.

Place 0.150 g of the powdered herbal drug (180) (*2.9.12*) in a 100 mL flask. Add 30.0 mL of *water R*, mix, weigh and place in a water-bath. Heat under a reflux condenser for 15 min. Allow to cool, weigh and adjust to the original mass with *water R*. Centrifuge and transfer 20.0 mL of the supernatant to a 150 mL separating funnel. Add 0.1 mL of *dilute hydrochloric acid R* and shake with 3 quantities, each of 15 mL, of *chloroform R*. Allow to separate and discard the chloroform layer. Add 0.10 g of *sodium hydrogen carbonate R* and shake for 3 min. Centrifuge and transfer 10.0 mL of the supernatant to a 100 mL round-bottomed flask with a ground-glass neck. Add 20 mL of *ferric chloride solution R1* and mix. Heat for 20 min in a water-bath under a reflux condenser with the water level above that of the liquid in the flask; add 1 mL of *hydrochloric acid R* and heat for a further 20 min, with frequent shaking, to dissolve the precipitate. Cool, transfer the mixture to a separating funnel and shake with 3 quantities, each of 25 mL, of *ether R* previously used to rinse the flask. Combine the 3 ether layers and wash with 2 quantities, each of 15 mL, of *water R*. Transfer the ether layer to a volumetric flask and dilute to 100.0 mL with *ether R*. Evaporate 10.0 mL carefully to dryness and dissolve the residue in 10.0 mL of a 5 g/L solution of *magnesium acetate R* in *methanol R*. Measure the absorbance (*2.2.25*) at 515 nm, using *methanol R* as the compensation liquid.

Calculate the percentage content of hydroxyanthracene glycosides, expressed as sennoside B, using the following expression:

$$\frac{A \times 1.25}{m}$$

i.e. taking the specific absorbance of sennoside B to be 240.

A = absorbance at 515 nm,

m = mass of the substance to be examined, in grams.

STORAGE

Protected from moisture.

Herbal drugs

01/2009:1261

SENNA LEAF DRY EXTRACT, STANDARDISED

Sennae folii extractum siccum normatum

[8055-96-7]

DEFINITION

Standardised dry extract produced from *Senna leaf (0206)*.

Content: 5.5 per cent to 8.0 per cent of hydroxyanthracene glycosides, expressed as sennoside B ($C_{42}H_{38}O_{20}$; M_r 863) (dried extract). The measured content does not deviate from the value stated on the label by more than ± 10 per cent.

PRODUCTION

The extract is produced from the herbal drug by a suitable procedure using ethanol (50-80 per cent *V/V*).

CHARACTERS

Appearance: brownish or brown powder.

IDENTIFICATION

A. Thin-layer chromatography (*2.2.27*).

Solvent mixture: *ethanol (96 per cent) R*, *water R* (50:50 *V/V*).

Test solution. To 0.1 g of the extract to be examined add 5 mL of the solvent mixture and heat to boiling. Cool and centrifuge. Use the supernatant.

Reference solution. Dissolve 10 mg of *senna extract CRS* in 1 mL of the solvent mixture (a slight residue remains).

Plate: *TLC silica gel plate R*.

Mobile phase: *glacial acetic acid R*, *water R*, *ethyl acetate R*, *propanol R* (1:30:40:40 *V/V/V/V*).

Application: 10 µL as bands.

Development: over a path of 10 cm.

Drying: in air.

Detection: spray with a 20 per cent *V/V* solution of *nitric acid R* and heat at 120 °C for 10 min; allow to cool and spray with a 50 g/L solution of *potassium hydroxide R* in *ethanol (50 per cent V/V) R* until the zones appear.

Results: the principal zones in the chromatogram obtained with the test solution are similar in position, colour and size to the principal zones in the chromatogram obtained with the reference solution. The chromatograms show in the lower third a prominent brown zone due to sennoside B and above it a yellow zone followed by another prominent brown zone due to sennoside A. In the upper half of the chromatograms are visible, in order of increasing R_F value, a prominent reddish-brown zone and an orange-brown zone followed by a faint pink zone and 2 yellow zones. Close to the solvent front a dark pink zone appears, which may be followed by several faint zones.

B. Place about 25 mg of the extract to be examined in a conical flask and add 50 mL of *water R* and 2 mL of *hydrochloric acid R*. Heat in a water-bath for 15 min, cool and shake with 40 mL of *ether R*. Separate the ether layer, dry over *anhydrous sodium sulfate R*, evaporate 5 mL to dryness and to the cooled residue add 5 mL of *dilute ammonia R1*. A yellow or orange colour develops. Heat on a water-bath for 2 min. A reddish-violet colour develops.

TESTS

Loss on drying (*2.8.17*): maximum 5.0 per cent.

Microbial contamination

TAMC: acceptance criterion 10^4 CFU/g (*2.6.12*).

TYMC: acceptance criterion 10^2 CFU/g (*2.6.12*).

Absence of *Escherichia coli* (*2.6.13*).

Absence of *Salmonella* (*2.6.13*).

ASSAY

Carry out the assay protected from bright light.

Place 0.150 g of the extract to be examined in a 100 mL flask, dissolve in *water R* and dilute to 100.0 mL with the same solvent. Filter the solution, discard the first 10 mL of the filtrate. Transfer 20.0 mL of the filtrate to a 150 mL separating funnel. Add 0.1 mL of *dilute hydrochloric acid R* and shake with 3 quantities, each of 15 mL, of *ether R*. Allow the layers to separate and discard the ether layer. Add 0.10 g of *sodium hydrogen carbonate R* to the aqueous layer and shake for 3 min. Centrifuge and transfer 10.0 mL of the supernatant to a 100 mL round-bottomed flask with a ground-glass neck. Add 20 mL of *ferric chloride solution R1* and mix. Heat for 20 min under a reflux condenser in a water-bath with the water level above that of the liquid in the flask; add 3 mL of *hydrochloric acid R* and heat for a further 30 min with frequent shaking to dissolve the precipitate. Cool, transfer the mixture to a separating funnel and shake with 3 quantities, each of 25 mL, of *ether R* previously used to rinse the flask. Combine the ether layers and wash with 2 quantities, each of 15 mL, of *water R*. Transfer the ether layers to a volumetric flask and dilute to 100.0 mL with *ether R*. Evaporate 10.0 mL carefully to dryness and dissolve the residue in 10.0 mL of a 5.0 g/L solution of *magnesium acetate R* in *methanol R*. Measure the absorbance (*2.2.25*) at 515 nm using *methanol R* as the compensation liquid.

Calculate the percentage content of hydroxyanthracene glycosides expressed as sennoside B using the following expression:

$$\frac{A \times 4.167}{m}$$

i.e. taking the specific absorbance of sennoside B to be 240.

A = absorbance at 515 nm;

m = mass of the herbal drug to be examined, in grams.

LABELLING

The label states the content of hydroxyanthracene glycosides.

01/2008:0207
corrected 6.0

SENNA PODS, ALEXANDRIAN

Sennae fructus acutifoliae

DEFINITION

Dried fruit of *Cassia senna* L. (*C. acutifolia* Delile).

Content: minimum 3.4 per cent of hydroxyanthracene glycosides, expressed as sennoside B ($C_{42}H_{38}O_{20}$; M_r 863) (dried drug).

CHARACTERS

Slight odour.

IDENTIFICATION

A. Flattened reniform pods, green or greenish-brown with brown patches at the positions corresponding to the seeds, usually 40-50 mm long and at least 20 mm wide. At one end is a stylar point and at the other a short stalk. The pods contain 6-7 flattened and obovate seeds, green or pale brown, with a continuous network of prominent ridges on the testa.

B. Reduce to a powder (355) (*2.9.12*). The powder is brown. Examine under a microscope using *chloral hydrate solution R*. The powder shows the following diagnostic characters: epicarp with polygonal cells and a small number of conical warty trichomes and occasional anomocytic or paracytic stomata (*2.8.3*); fibres in 2 crossed layers

Herbal drugs

accompanied by a crystal sheath of calcium oxalate prisms; characteristic palisade cells in the seed and stratified cells in the endosperm; clusters and prisms of calcium oxalate.

C. Thin-layer chromatography (*2.2.27*).

Test solution. To 0.5 g of the powdered herbal drug (180) (*2.9.12*) add 5 mL of a mixture of equal volumes of *ethanol (96 per cent) R* and *water R* and heat to boiling. Centrifuge and use the supernatant.

Reference solution. Dissolve 10 mg of *senna extract CRS* in 1 mL of a mixture of equal volumes of *ethanol (96 per cent) R* and *water R* (a slight residue remains).

Plate: *TLC silica gel G plate R.*

Mobile phase: *glacial acetic acid R*, *water R*, *ethyl acetate R*, *propanol R* (1:30:40:40 *V/V/V/V*).

Application: 10 µL, as bands of 20 mm by 2 mm.

Development: over a path of 10 cm.

Drying: in air.

Detection: spray with a 20 per cent *V/V* solution of *nitric acid R* and heat at 120 °C for 10 min; allow to cool and spray with a 50 g/L solution of *potassium hydroxide R* in *ethanol (50 per cent V/V) R* until the zones appear.

Results: the principal zones in the chromatogram obtained with the test solution are similar in position (sennosides B, A, D and C in order of increasing R_F value), colour and size to the principal zones in the chromatogram obtained with the reference solution; between the zones due to sennosides D and C, a red zone due to rhein-8-glucoside may be visible; the zones due to sennosides D and C are faint in the chromatogram obtained with the test solution.

D. Place about 25 mg of the powdered herbal drug (180) (*2.9.12*) in a conical flask and add 50 mL of *water R* and 2 mL of *hydrochloric acid R*. Heat in a water-bath for 15 min, cool and shake with 40 mL of *ether R*. Separate the ether layer, dry over *anhydrous sodium sulfate R*, evaporate 5 mL to dryness and to the cooled residue add 5 mL of *dilute ammonia R1*. A yellow or orange colour develops. Heat on a water-bath for 2 min. A reddish-violet colour develops.

TESTS

Foreign matter (*2.8.2*): maximum 1 per cent.

Loss on drying (*2.2.32*): maximum 12.0 per cent, determined on 1.000 g of the powdered herbal drug (355) (*2.9.12*) by drying in an oven at 105 °C for 2 h.

Total ash (*2.4.16*): maximum 9.0 per cent.

Ash insoluble in hydrochloric acid (*2.8.1*): maximum 2.0 per cent.

ASSAY

Carry out the assay protected from bright light.

Place 0.150 g of the powdered herbal drug (180) (*2.9.12*) in a 100 mL flask. Add 30.0 mL of *water R*, mix, weigh and place in a water-bath. Heat under a reflux condenser for 15 min. Allow to cool, weigh and adjust to the original mass with *water R*. Centrifuge and transfer 20.0 mL of the supernatant to a 150 mL separating funnel. Add 0.1 mL of *dilute hydrochloric acid R* and shake with 3 quantities, each of 15 mL, of *chloroform R*. Allow to separate and discard the chloroform layer. Add 0.10 g of *sodium hydrogen carbonate R* and shake for 3 min. Centrifuge and transfer 10.0 mL of the supernatant to a 100 mL round-bottomed flask with a ground-glass neck. Add 20 mL of *ferric chloride solution R1* and mix. Place the flask in a water-bath so that the water level is above that of the liquid in the flask, and heat under a reflux condenser for 20 min. Add 1 mL of *hydrochloric acid R* and heat for a further 20 min, with frequent shaking, to dissolve the precipitate. Cool, transfer the mixture to a separating funnel and shake with 3 quantities, each of 25 mL, of *ether R* previously used to rinse the flask. Combine the 3 ether layers and wash with 2 quantities, each of 15 mL, of *water R*. Transfer the ether layers to a volumetric flask and dilute to 100.0 mL with *ether R*. Evaporate 10.0 mL carefully to dryness and dissolve the residue in 10.0 mL of a 5 g/L solution of *magnesium acetate R* in *methanol R*. Measure the absorbance (*2.2.25*) at 515 nm using *methanol R* as the compensation liquid.

Calculate the percentage content of hydroxyanthracene glycosides, expressed as sennoside B, using the following expression:

$$\frac{A \times 1.25}{m}$$

i.e. taking the specific absorbance of sennoside B to be 240.

A = absorbance at 515 nm;

m = mass of the substance to be examined, in grams.

STORAGE

Protected from moisture.

01/2008:0208
corrected 6.0

SENNA PODS, TINNEVELLY

Sennae fructus angustifoliae

DEFINITION

Dried fruit of *Cassia angustifolia* Vahl.

Content: minimum 2.2 per cent of hydroxyanthracene glycosides, expressed as sennoside B ($C_{42}H_{38}O_{20}$; M_r 863) (dried drug).

CHARACTERS

Slight odour.

IDENTIFICATION

A. Flattened, slightly reniform pods, yellowish-brown or brown with dark brown patches at the positions corresponding to the seeds, usually 35-60 mm long and 14-18 mm wide. At one end is a stylar point and at the other a short stalk. The pods contain 5-8 flattened and obovate seeds, green or pale brown, with incomplete, wavy, transverse ridges on the testa.

B. Reduce to a powder (355) (*2.9.12*). The powder is brown. Examine under a microscope using *chloral hydrate solution R*. The powder shows the following diagnostic characters: epicarp with polygonal cells and a small number of conical warty trichomes and occasional anomocytic or paracytic stomata (*2.8.3*); fibres in 2 crossed layers accompanied by a crystal sheath of calcium oxalate prisms; characteristic palisade cells in the seed and stratified cells in the endosperm; clusters and prisms of calcium oxalate.

C. Thin-layer chromatography (*2.2.27*).

Test solution. To 0.5 g of the powdered herbal drug (180) (*2.9.12*) add 5 mL of a mixture of equal volumes of *ethanol (96 per cent) R* and *water R* and heat to boiling. Centrifuge and use the supernatant.

Reference solution. Dissolve 10 mg of *senna extract CRS* in 1 mL of a mixture of equal volumes of *ethanol (96 per cent) R* and *water R* (a slight residue remains).

Plate: *TLC silica gel G plate R.*

Mobile phase: *glacial acetic acid R*, *water R*, *ethyl acetate R*, *propanol R* (1:30:40:40 *V/V/V/V*).

Application: 10 µL, as bands of 20 mm by 2 mm.

Development: over a path of 10 cm.

Drying: in air.

Detection: spray with a 20 per cent *V/V* solution of *nitric acid R* and heat at 120 °C for 10 min; allow to cool and spray with a 50 g/L solution of *potassium hydroxide R* in *ethanol (50 per cent V/V) R* until the zones appear.

Results: the principal zones in the chromatogram obtained with the test solution are similar in position (sennosides B, A, D and C in the order of increasing R_F value), colour and size to the principal zones in the chromatogram obtained with the reference solution. Between the zones due to sennosides D and C a red zone due to rhein-8-glucoside may be visible. The zones due to sennosides D and C are faint in the chromatogram obtained with the test solution.

D. Place about 25 mg of the powdered herbal drug (180) (*2.9.12*) in a conical flask and add 50 mL of *water R* and 2 mL of *hydrochloric acid R*. Heat in a water-bath for 15 min, cool and shake with 40 mL of *ether R*. Separate the ether layer, dry over *anhydrous sodium sulfate R*, evaporate 5 mL to dryness and to the cooled residue add 5 mL of *dilute ammonia R1*. A yellow or orange colour develops. Heat on a water-bath for 2 min. A reddish-violet colour develops.

TESTS

Foreign matter (*2.8.2*): maximum 1 per cent.

Loss on drying (*2.2.32*): maximum 12.0 per cent, determined on 1.000 g of the powdered herbal drug (355) (*2.9.12*) by drying in an oven at 105 °C for 2 h.

Total ash (*2.4.16*): maximum 9.0 per cent.

Ash insoluble in hydrochloric acid (*2.8.1*): maximum 2.0 per cent.

ASSAY

Carry out the assay protected from bright light.

Place 0.150 g of the powdered herbal drug (180) (*2.9.12*) in a 100 mL flask. Add 30.0 mL of *water R*, mix, weigh and place in a water-bath. Heat under a reflux condenser for 15 min. Allow to cool, weigh and adjust to the original mass with *water R*. Centrifuge and transfer 20.0 mL of the supernatant to a 150 mL separating funnel. Add 0.1 mL of *dilute hydrochloric acid R* and shake with 3 quantities, each of 15 mL, of *chloroform R*. Allow to separate and discard the chloroform layer. Add 0.10 g of *sodium hydrogen carbonate R* and shake for 3 min. Centrifuge and transfer 10.0 mL of the supernatant to a 100 mL round-bottomed flask with a ground-glass neck. Add 20 mL of *ferric chloride solution R1* and mix. Heat for 20 min in a water-bath under a reflux condenser, with the water level above that of the liquid in the flask; add 1 mL of *hydrochloric acid R* and heat for a further 20 min, with frequent shaking, to dissolve the precipitate. Cool, transfer the mixture to a separating funnel and shake with 3 quantities, each of 25 mL, of *ether R* previously used to rinse the flask. Combine the 3 ether layers and wash with 2 quantities, each of 15 mL, of *water R*. Transfer the ether layer to a volumetric flask and dilute to 100.0 mL with *ether R*. Carefully evaporate 10.0 mL to dryness and dissolve the residue in 10.0 mL of a 5 g/L solution of *magnesium acetate R* in *methanol R*. Measure the absorbance (*2.2.25*) at 515 nm using *methanol R* as the compensation liquid.

Calculate the percentage content of hydroxyanthracene glycosides, expressed as sennoside B, using the following expression:

$$\frac{A \times 1.25}{m}$$

taking the specific absorbance of sennoside B to be 240.

A = absorbance at 515 nm;

m = mass of the substance to be examined, in grams.

STORAGE

Protected from moisture.

04/2013:2639

SOPHORA FLOWER

Sophorae japonicae flos

DEFINITION

Dried, opened flower of *Styphnolobium japonicum* (L.) Schott (syn. *Sophora japonica* L.).

Content:

- minimum 8.0 per cent of total flavonoids, expressed as rutin ($C_{27}H_{30}O_{16}$; M_r 611) (dried drug);
- minimum 6.0 per cent of rutin ($C_{27}H_{30}O_{16}$; M_r 611) (dried drug).

IDENTIFICATION

A. The opened flower is crumpled, rolled, and has a very thin and short pedicel. The dark green or brown, campanulate calyx is about 3-4 mm long and consists of 5 fused sepals with longitudinal striations at the base, divided at the apex into 5 slightly bilabiate lobes. The pale yellow or light yellowish-brown, papilionaceous type corolla is often broken and measures about 10-15 mm; the upper petal is the largest, subrounded, with a reflexed apex and a bright yellow unguis at its internal base. The other 4 petals are oblong. There are 10 free stamens surrounding a cylindrical and curved central style.

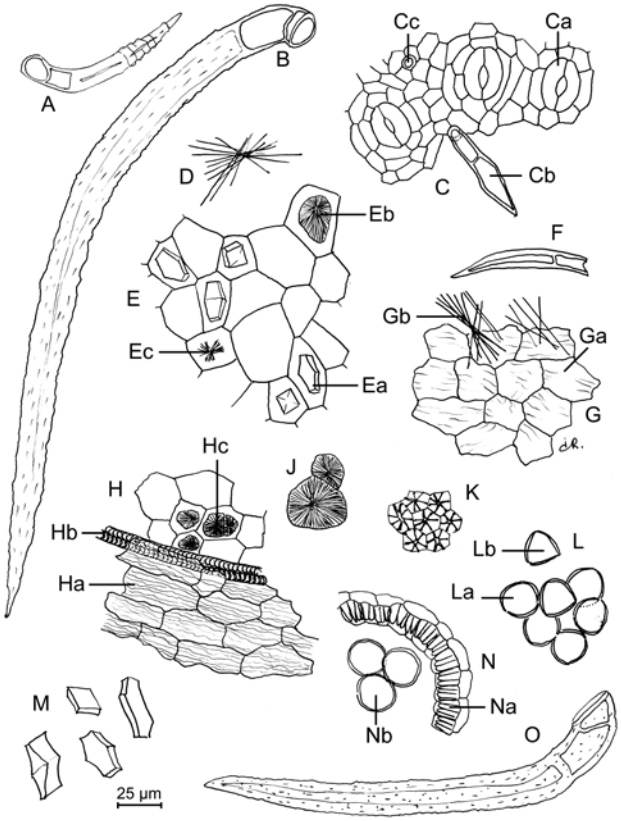

Figure 2639.-1. – *Illustration for identification test B of powdered herbal drug of sophora flower*

B. Microscopic examination (*2.8.23*). The powder is yellowish-green. Examine under a microscope using *chloral hydrate solution R*. The powder shows the following diagnostic characters (Figure 2639.-1): roundish [La] or triangular [Lb] pollen grains [L] with 3 pores and a smooth exine, about 18 µm in diameter; isolated covering trichomes [A, B, F, O] of varying lengths (60-660 µm), slightly flexed, usually consisting of 1 or 2 basal cells and a long pointed distal cell, with smooth or slightly warty walls; fragments of sepals [C] composed of

Herbal drugs

anomocytic stomata (*2.8.3*) with 4-8 subsidiary cells [Ca], covering trichomes [Cb] or their scars [Cc]; fragments of petals [G, H] with cells covered by a finely striated cuticle [Ga, Ha], sometimes accompanied by fine annular or spiral vessels [Hb] and parenchyma with some cells containing crystalline masses of rutin [Hc]; fragments of parenchyma [E] from the sepals containing prisms of calcium oxalate [Ea] and crystalline masses of rutin [Eb]; fragments of anthers [N] showing the characteristic fibrous layer, in transverse section [Na] or in surface view [K], and immature pollen grains [Nb]; free prisms of calcium oxalate [M]. Examine under a microscope using *chloral hydrate solution R*, without heating the preparation: brownish-yellow rutin crystals are visible, free or included in cells, as crystalline masses [Eb, Hc, J] or in fan-shaped aggregates of very fine needles [D, Ec, Gb].

C. Thin-layer chromatography (*2.2.27*).

Test solution. To 1 g of the powdered herbal drug (355) (*2.9.12*) add 5.0 mL of *methanol R*, sonicate for 10 min and filter.

Reference solution. Dissolve 10 mg of *hyperoside R* and 10 mg of *rutin R* in 10 mL of *methanol R*.

Plate: *TLC silica gel plate R* (5-40 µm) [or *TLC silica gel plate R* (2-10 µm)].

Mobile phase: *anhydrous formic acid R*, *water R*, *ethyl acetate R* (10:10:80 *V/V/V*).

Application: 10 µL [or 5 µL] as bands of 10 mm [or 8 mm].

Development: over a path of 10 cm [or 6 cm].

Drying: in air.

Detection: treat with a 10 g/L solution of *diphenylboric acid aminoethyl ester R* in *methanol R* and then with a 50 g/L solution of *macrogol 400 R* in *methanol R*, allow to dry in air for about 30 min, and examine in ultraviolet light at 365 nm.

Results: see below the sequence of fluorescent zones present in the chromatograms obtained with the reference solution and the test solution. Furthermore, other faint fluorescent zones may be present in the chromatogram obtained with the test solution.

Top of the plate	
	An orange-yellow zone
	A brown zone
Hyperoside: a yellowish-orange zone	
	2 green zones
Rutin: an orange-yellow zone	A very intense orange-yellow zone (rutin)
Reference solution	**Test solution**

TESTS

Foreign matter (*2.8.2*): maximum 5 per cent of flower buds and maximum 2 per cent of other foreign matter.

Loss on drying (*2.2.32*): maximum 11.0 per cent, determined on 1.000 g of the powdered herbal drug (355) (*2.9.12*) by drying in an oven at 105 °C for 2 h.

Total ash (*2.4.16*): maximum 9.0 per cent.

ASSAY

Total flavonoids

Stock solution. Place 2.000 g of the powdered herbal drug (355) (*2.9.12*) in the cartridge of a continuous-extraction apparatus (Soxhlet type). Add 100 mL of *heptane R* and heat under a reflux condenser until the extraction liquid is colourless. Allow to cool and discard the heptane. Add 90 mL of *methanol R* and continue the extraction with heating under a reflux condenser until the extraction liquid is colourless. Allow to cool. Transfer the methanolic solution to a 100 mL volumetric flask. Rinse the extraction flask with a few millilitres of *methanol R*. Combine the methanolic solutions and dilute to 100.0 mL with *methanol R*. Dilute 10.0 mL of this solution to 100.0 mL with *water R* and shake vigorously.

Test solution. Dilute 10.0 mL of the stock solution to 100.0 mL with a 20 g/L solution of *aluminium chloride R* in *methanol R*.

Compensation solution. Dilute 10.0 mL of the stock solution to 100.0 mL with *methanol R*.

Measure the absorbance (*2.2.25*) of the test solution after 15 min by comparison with the compensation solution at 425 nm.

Calculate the percentage content of total flavonoids, expressed as rutin, using the following expression:

$$\frac{A \times 1000}{m \times 37}$$

i.e. taking the specific absorbance of rutin to be 370.

A = absorbance of the test solution at 425 nm;

m = mass of the herbal drug to be examined, in grams.

Rutin. Liquid chromatography (*2.2.29*).

Test solution. Place 0.500 g of the powdered herbal drug (355) (*2.9.12*) in a conical flask and add 50.0 mL of *methanol R*. Weigh, sonicate for 30 min and allow to cool. Weigh and compensate for the loss of solvent with *methanol R*. Shake vigorously, filter, and dilute 2.0 mL of the filtrate to 10.0 mL with *methanol R*.

Reference solution (a). Dissolve 10.0 mg of *rutoside trihydrate CRS* in 2 mL of *methanol R* and dilute to 10.0 mL with a 50 per cent *V/V* solution of *methanol R*. Dilute 2.0 mL of this solution to 10.0 mL with a 50 per cent *V/V* solution of *methanol R*.

Reference solution (b). Dissolve 10.0 mg of *apigenin 7-glucoside R* and 10.0 mg of *rutin R* in 2 mL of *methanol R* and dilute to 10.0 mL with a 50 per cent *V/V* solution of *methanol R*. Dilute 2.0 mL of this solution to 10.0 mL with a 50 per cent *V/V* solution of *methanol R*.

Column:

- *size*: *l* = 0.25 m, Ø = 4.6 mm;
- *stationary phase*: *octadecylsilyl silica gel for chromatography R* (5 µm).

Mobile phase:

- *mobile phase A*: 1 per cent *V/V* solution of *glacial acetic acid R*;
- *mobile phase B*: *methanol R*;

Time (min)	Mobile phase A (per cent *V/V*)	Mobile phase B (per cent *V/V*)
0 - 5	68	32
5 - 20	68 → 50	32 → 50
20 - 30	50 → 0	50 → 100
30 - 35	0	100

Flow rate: 1.3 mL/min.

Detection: spectrophotometer at 350 nm.

Injection: 20 µL.

Relative retention with reference to rutin (retention time = about 17 min): apigenin 7-glucoside = about 1.1.

System suitability: reference solution (b):

- *resolution*: minimum 1.5 between the peaks due to rutin and apigenin 7-glucoside.

Herbal drugs

Calculate the percentage content of rutin using the following expression:

$$\frac{A_1 \times m_2 \times p \times 5}{A_2 \times m_1}$$

A_1 = area of the peak due to rutin in the chromatogram obtained with the test solution;

A_2 = area of the peak due to rutin in the chromatogram obtained with reference solution (a);

m_1 = mass of the herbal drug to be examined used to prepare the test solution, in grams;

m_2 = mass of *rutoside trihydrate CRS* used to prepare reference solution (a), in grams;

p = assigned percentage content of rutin in *rutoside trihydrate CRS*.

04/2013:2427

SOPHORA FLOWER-BUD

Sophorae japonicae flos immaturus

DEFINITION

Whole, dried flower bud of *Styphnolobium japonicum* (L.) Schott (syn. *Sophora japonica* L.).

Content:

- minimum 20.0 per cent of total flavonoids, expressed as rutin ($C_{27}H_{30}O_{16}$; M_r 611) (dried drug);
- minimum 15.0 per cent of rutin ($C_{27}H_{30}O_{16}$; M_r 611) (dried drug).

IDENTIFICATION

A. The flat flower bud, ovoid or ellipsoid, has a very thin and short pedicel and is about 7-10 mm long and 3-4 mm thick. The dark green or brown calyx, forming the lower part of the bud, is about 3-4 mm long and consists of 5 fused sepals with longitudinal striations at the base. The pale yellow or brownish-yellow corolla, unopened, delicate, extends beyond the calyx and contains 10 free stamens surrounding a central style.

B. Microscopic examination (*2.8.23*). The powder is pale yellow. Examine under a microscope using *chloral hydrate solution R*. The powder shows the following diagnostic characters (Figure 2427.-1): roundish [La] or triangular [Lb] pollen grains [L] with 3 pores and a smooth exine, about 18 µm in diameter; isolated covering trichomes [A, B, F, O] of varying lengths (60-660 µm), slightly flexed, usually consisting of 1 or 2 basal cells and a long pointed distal cell, with smooth or slightly warty walls; fragments of sepals [C] composed of anomocytic stomata (*2.8.3*) with 4-8 subsidiary cells [Ca], covering trichomes [Cb] or their scars [Cc]; fragments of petals [G, H] with cells covered by a finely striated cuticle [Ga, Ha], sometimes accompanied by fine annular or spiral vessels [Hb] and parenchyma with some cells containing crystalline masses of rutin [Hc]; fragments of parenchyma [E] from the sepals containing prisms of calcium oxalate [Ea] and crystalline masses of rutin [Eb]; fragments of anthers [N] showing the characteristic fibrous layer, in transverse section [Na] or in surface view [K], and immature pollen grains [Nb]; free prisms of calcium oxalate [M]. Examine under a microscope using *chloral hydrate solution R*, without heating the preparation: brownish-yellow rutin crystals are visible, free or included in cells, as crystalline masses [Eb, Hc, J] or in fan-shaped aggregates of very fine needles [D, Ec, Gb].

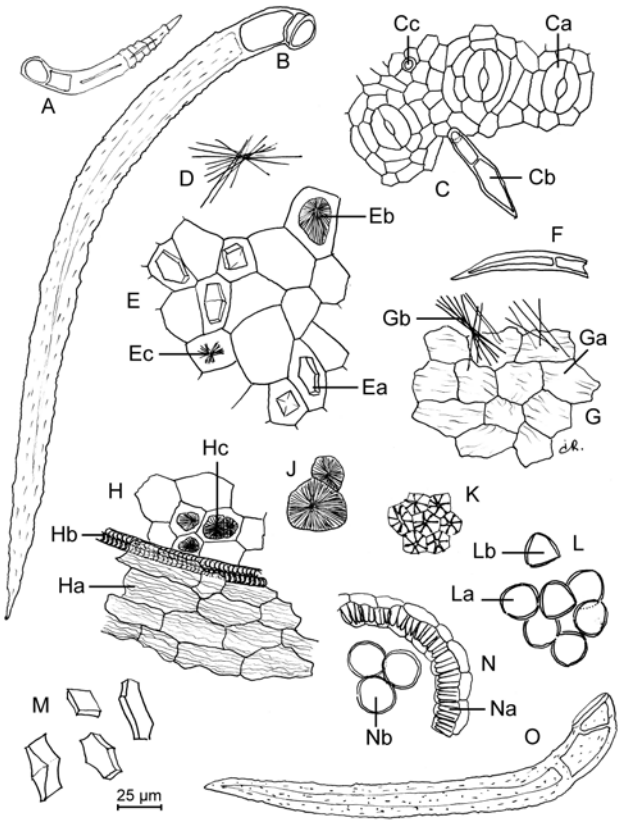

Figure 2427.-1. – *Illustration for identification test B of powdered herbal drug of sophora flower-bud*

C. Thin-layer chromatography (*2.2.27*).

Test solution. To 0.2 g of the powdered herbal drug (355) (*2.9.12*) add 5.0 mL of *methanol R*, sonicate for 10 min and filter.

Reference solution. Dissolve 10 mg of *hyperoside R* and 10 mg of *rutin R* in 10 mL of *methanol R*.

Plate: *TLC silica gel plate R* (5-40 µm) [or *TLC silica gel plate R* (2-10 µm)].

Mobile phase: *anhydrous formic acid R*, *water R*, *ethyl acetate R* (10:10:80 *V/V/V*).

Application: 10 µL [or 5 µL] as bands of 10 mm [or 8 mm].

Development: over a path of 10 cm [or 6 cm].

Drying: in air.

Detection: treat with a 10 g/L solution of *diphenylboric acid aminoethyl ester R* in *methanol R* and then with a 50 g/L solution of *macrogol 400 R* in *methanol R*, allow to dry in air for about 30 min, and examine in ultraviolet light at 365 nm.

Results: see below the sequence of fluorescent zones present in the chromatograms obtained with the reference solution and the test solution. Furthermore, other faint fluorescent zones may be present in the chromatogram obtained with the test solution.

Top of the plate	
	An orange-yellow zone
———	———
	A brown zone
Hyperoside: a yellowish-orange zone	
———	———
	2 green zones
Rutin: an orange-yellow zone	A very intense orange-yellow zone (rutin)
Reference solution	**Test solution**

TESTS

Foreign matter (*2.8.2*): maximum 5 per cent of opened flowers and maximum 2 per cent of other foreign matter.

Loss on drying (*2.2.32*): maximum 11.0 per cent, determined on 1.000 g of the powdered herbal drug (355) (*2.9.12*) by drying in an oven at 105 °C for 2 h.

Total ash (*2.4.16*): maximum 9.0 per cent.

ASSAY

Total flavonoids

Stock solution. Place 1.00 g of the powdered herbal drug (355) (*2.9.12*) in the cartridge of a continuous-extraction apparatus (Soxhlet type). Add 100 mL of *heptane R* and heat under a reflux condenser until the extraction liquid is colourless. Allow to cool and discard the heptane. Add 90 mL of *methanol R* and continue the extraction with heating under a reflux condenser until the extraction liquid is colourless. Allow to cool. Transfer the methanolic solution to a 100 mL volumetric flask. Rinse the extraction flask with a few millilitres of *methanol R*. Combine the methanolic solutions and dilute to 100.0 mL with *methanol R*. Dilute 10.0 mL of this solution to 100.0 mL with *water R* and shake vigorously.

Test solution. Dilute 10.0 mL of the stock solution to 100.0 mL with a 20 g/L solution of *aluminium chloride R* in *methanol R*.

Compensation solution. Dilute 10.0 mL of the stock solution to 100.0 mL with *methanol R*.

Measure the absorbance (*2.2.25*) of the test solution after 15 min by comparison with the compensation solution at 425 nm.

Calculate the percentage content of total flavonoids, expressed as rutin, using the following expression:

$$\frac{A \times 1000}{m \times 37}$$

i.e. taking the specific absorbance of rutin to be 370.

A = absorbance of the test solution at 425 nm;

m = mass of the herbal drug to be examined, in grams.

Rutin. Liquid chromatography (*2.2.29*).

Test solution. Place 0.200 g of the powdered herbal drug (355) (*2.9.12*) in a conical flask and add 50.0 mL of *methanol R*. Weigh, sonicate for 30 min and allow to cool. Weigh and compensate for the loss of solvent with *methanol R*. Shake vigorously, filter, and dilute 2.0 mL of the filtrate to 10.0 mL with *methanol R*.

Reference solution (a). Dissolve 10.0 mg of *rutoside trihydrate CRS* in 2 mL of *methanol R* and dilute to 10.0 mL with a 50 per cent *V/V* solution of *methanol R*. Dilute 2.0 mL of this solution to 10.0 mL with a 50 per cent *V/V* solution of *methanol R*.

Reference solution (b). Dissolve 10.0 mg of *apigenin 7-glucoside R* and 10.0 mg of *rutin R* in 2 mL of *methanol R* and dilute to 10.0 mL with a 50 per cent *V/V* solution of *methanol R*. Dilute 2.0 mL of this solution to 10.0 mL with a 50 per cent *V/V* solution of *methanol R*.

Column:
- *size*: *l* = 0.25 m, Ø = 4.6 mm;
- *stationary phase*: *octadecylsilyl silica gel for chromatography R* (5 µm).

Mobile phase:
- *mobile phase A*: 1 per cent *V/V* solution of *glacial acetic acid R*;
- *mobile phase B*: *methanol R*;

Time (min)	Mobile phase A (per cent *V/V*)	Mobile phase B (per cent *V/V*)
0 - 5	68	32
5 - 20	68 → 50	32 → 50
20 - 30	50 → 0	50 → 100
30 - 35	0	100

Flow rate: 1.3 mL/min.

Detection: spectrophotometer at 350 nm.

Injection: 20 µL.

Relative retention with reference to rutin (retention time = about 17 min): apigenin 7-glucoside = about 1.1.

System suitability: reference solution (b):
- *resolution*: minimum 1.5 between the peaks due to rutin and apigenin 7-glucoside.

Calculate the percentage content of rutin using the following expression:

$$\frac{A_1 \times m_2 \times p \times 5}{A_2 \times m_1}$$

A_1 = area of the peak due to rutin in the chromatogram obtained with the test solution;

A_2 = area of the peak due to rutin in the chromatogram obtained with reference solution (a);

m_1 = mass of the herbal drug to be examined used to prepare the test solution, in grams;

m_2 = mass of *rutoside trihydrate CRS* used to prepare reference solution (a), in grams;

p = assigned percentage content of rutin in *rutoside trihydrate CRS*.

07/2008:1849
corrected 7.0

SPANISH SAGE OIL

Salviae lavandulifoliae aetheroleum

DEFINITION

Essential oil obtained by steam distillation from the aerial parts of *Salvia lavandulifolia* Vahl, collected at the flowering stage.

CHARACTERS

Appearance: clear, colourless or pale yellow, mobile liquid.

Camphor-like odour.

IDENTIFICATION

First identification: B.

Second identification: A.

A. Thin-layer chromatography (*2.2.27*).
Test solution. Dissolve 0.1 mL of the essential oil to be examined in 10 mL of *toluene R*.

Herbal drugs

Reference solution. Dissolve 20 µL of *thujone R* and 30 µL of *cineole R* in 10 mL of *toluene R*.

Plate: *TLC silica gel plate R* (5-40 µm) [or *TLC silica gel plate R* (2-10 µm)].

Mobile phase: *ethyl acetate R*, *toluene R* (5:95 *V/V*).

Application: 10 µL [or 3 µL] as bands of 10 mm [or 6 mm].

Development: over a path of 15 cm [or 6 cm].

Drying: in air.

Detection: spray with a freshly prepared 200 g/L solution of *phosphomolybdic acid R* in *ethanol (96 per cent) R* and heat at 105 °C for 10 min; examine in daylight.

Results: see below the sequence of zones present in the chromatograms obtained with the reference solution and the test solution. Furthermore, other faint zones may be present in the chromatogram obtained with the test solution.

Top of the plate	
	A blue zone
_____	_____
Thujone: 2 pinkish-violet zones	
Cineole: a blue zone	A blue zone (cineole)
_____	_____
	3 blue zones
Reference solution	**Test solution**

B. Examine the chromatograms obtained in the test for chromatographic profile.

Results: the characteristic peaks in the chromatogram obtained with the test solution are similar in retention time to those in the chromatogram obtained with reference solution (a).

TESTS

Relative density (*2.2.5*): 0.907 to 0.932.

Refractive index (*2.2.6*): 1.465 to 1.473.

Optical rotation (*2.2.7*): + 7° to + 17°.

Acid value (*2.5.1*): maximum 2.0, determined on 5.00 g.

Solubility in alcohol (*2.8.10*): 1 volume is soluble in 2 volumes and more of *ethanol (80 per cent V/V) R*.

Chromatographic profile. Gas chromatography (*2.2.28*): use the normalisation procedure.

Test solution. Dissolve 0.200 g of the essential oil to be examined in *heptane R* and dilute to 10.0 mL with the same solvent.

Reference solution (a). Dissolve 0.200 g of *Spanish sage oil for peak identification CRS* in *heptane R* and dilute to 10.0 mL with the same solvent.

Reference solution (b). Dissolve 5 µL of *limonene R* in *heptane R* and dilute to 50.0 mL with the same solvent. Dilute 0.5 mL of this solution to 5.0 mL with *heptane R*.

Column:

- *material*: fused silica;
- *size*: *l* = 60 m, Ø = 0.25 mm;
- *stationary phase*: *macrogol 20 000 R* (film thickness 0.25 µm).

Carrier gas: *helium for chromatography R*.

Flow rate: 1.5 mL/min.

Split ratio: 1:50.

Temperature:

	Time (min)	Temperature (°C)
Column	0 - 43	60 → 232
Injection port		250
Detector		250

Detection: flame ionisation.

Injection: 1 µL.

System suitability: reference solution (a):

- the chromatogram obtained is similar to the chromatogram supplied with *Spanish sage oil for peak identification CRS*;
- *resolution*: minimum 1.5 between the peaks due to limonene and 1,8-cineole and minimum 1.5 between the peaks due to α-terpinyl acetate and borneol.

Use the chromatogram supplied with *Spanish sage oil for peak identification CRS* and the chromatogram obtained with reference solution (a) to locate the peaks due to α-pinene, sabinene, limonene, 1,8-cineole, thujone, camphor, linalol, linalyl acetate, terpinen-4-ol, sabinyl acetate, α-terpinyl acetate and borneol.

Determine the percentage content of each of these components. The percentages are within the following ranges:

- *α-pinene*: 4.0 per cent to 11.0 per cent;
- *sabinene*: 0.1 per cent to 3.5 per cent;
- *limonene*: 2.0 per cent to 6.5 per cent;
- *1,8-cineole*: 10.0 per cent to 30.5 per cent;
- *thujone*: maximum 0.5 per cent;
- *camphor*: 11.0 per cent to 36.0 per cent;
- *linalol*: 0.3 per cent to 4.0 per cent;
- *linalyl acetate*: maximum 5.0 per cent;
- *terpinen-4-ol*: maximum 2.0 per cent;
- *sabinyl acetate*: 0.5 per cent to 9.0 per cent;
- *α-terpinyl acetate*: 0.5 per cent to 9.0 per cent;
- *borneol*: 1.0 per cent to 7.0 per cent;
- *disregard limit*: the area of the principal peak in the chromatogram obtained with reference solution (b) (0.05 per cent).

STORAGE

At a temperature not exceeding 25 °C.

07/2009:2419
corrected 7.0

SPIKE LAVENDER OIL

Spicae aetheroleum

DEFINITION

Essential oil obtained by steam distillation of the flowering tops of *Lavandula latifolia* Medik.

CHARACTERS

Appearance: clear, mobile, light yellow or greenish-yellow liquid.

Odour reminiscent of cineole and camphor.

IDENTIFICATION

First identification: *B*.

Second identification: *A*.

A. Thin-layer chromatography (*2.2.27*).

Test solution. Dissolve 20 µL of the substance to be examined in 1 mL of *toluene R*.

Reference solution. Dissolve 10 µL of *cineole R*, 10 µL of *linalol R* and 10 µL of *linalyl acetate R* in 1 mL of *toluene R*.

Herbal drugs

Plate: *TLC silica gel plate R* (5-40 µm) [or *TLC silica gel plate R* (2-10 µm)].

Mobile phase: *ethyl acetate R*, *toluene R* (5:95 *V/V*).

Application: 10 µL [or 2 µL], as bands of 10 mm [or 6 mm].

Development: over a path of 10 cm [or 8 cm].

Drying: in air.

Detection: spray with *anisaldehyde solution R* and heat at 100-105 °C for 5-10 min; examine immediately in daylight.

Results: see below the sequence of zones present in the chromatograms obtained with the reference solution and the test solution. Furthermore, other faint zones may be present in the chromatogram obtained with the test solution.

Top of the plate	
	A pink zone
———	———
Linalyl acetate: a violet or brown zone	A faint violet or brown zone may be present (linalyl acetate)
	A pink zone
———	———
Cineole: a violet-brown zone	An intense violet-brown zone (cineole)
Linalol: a violet or brown zone	An intense violet or brown zone (linalol)
	A greyish or brownish zone
	A faint violet zone
Reference solution	**Test solution**

B. Examine the chromatograms obtained in the test for chromatographic profile.

Results: the characteristic peaks in the chromatogram obtained with the test solution are similar in retention time to the peaks due to limonene, cineole, camphor, linalol, linalyl acetate, α-terpineol and *trans*-α-bisabolene in the chromatogram obtained with reference solution (a).

TESTS

Relative density (*2.2.5*): 0.894 to 0.907.

Refractive index (*2.2.6*): 1.461 to 1.468.

Optical rotation (*2.2.7*): − 7° to + 2°.

Acid value (*2.5.1*): maximum 1.5, determined on 5.00 g of the substance to be examined.

Solubility in alcohol (*2.8.10*): 1.0 mL of the substance to be examined is soluble, sometimes with opalescence, in 3.0 mL of *ethanol (70 per cent V/V) R*.

Chromatographic profile. Gas chromatography (*2.2.28*): use the normalisation procedure.

Test solution. Dissolve 200 µL of the substance to be examined in *heptane R* and dilute to 10.0 mL with the same solvent.

Reference solution (a). Dissolve 200 µL of *spike lavender oil CRS* in *heptane R* and dilute to 10.0 mL with the same solvent.

Reference solution (b). Dissolve 5 µL of *limonene R* in 50.0 mL of *heptane R*. Dilute 0.5 mL of this solution to 5.0 mL with *heptane R*.

Column:

- *material*: fused silica;
- *size*: *l* = 60 m, Ø = 0.25 mm;
- *stationary phase*: *macrogol 20 000 R* (film thickness 0.25 µm).

Carrier gas: *helium for chromatography R*.

Flow rate: 1.5 mL/min.

Split ratio: 1:50.

Temperature:

	Time (min)	Temperature (°C)
Column	0 - 15	70
	15 - 70	70 - 180
Injection port		220
Detector		220

Detection: flame ionisation.

Injection: 1 µL.

Identification of peaks: use the chromatogram supplied with *spike lavender oil CRS* and the chromatogram obtained with reference solution (a) to identify the peaks due to limonene, cineole, camphor, linalol, linalyl acetate, α-terpineol and *trans*-α-bisabolene.

System suitability: reference solution (a):

- the chromatogram obtained is similar to the chromatogram supplied with *spike lavender oil CRS*;
- *resolution*: minimum 1.5 between the peaks due to limonene and cineole.

Determine the percentage content of each of these components. The percentages are within the following ranges:

- *limonene*: 0.5 per cent to 3.0 per cent;
- *cineole*: 16.0 per cent to 39.0 per cent;
- *camphor*: 8.0 per cent to 16.0 per cent;
- *linalol*: 34.0 per cent to 50.0 per cent;
- *linalyl acetate*: maximum 1.6 per cent;
- *α-terpineol*: 0.2 per cent to 2.0 per cent;
- *trans-α-bisabolene*: 0.4 per cent to 2.5 per cent;
- *disregard limit*: the area of the principal peak in the chromatogram obtained with reference solution (b) (0.05 per cent).

STORAGE

At a temperature not exceeding 25 °C.

07/2013:1438

ST. JOHN'S WORT

Hyperici herba

DEFINITION

Whole or fragmented, dried flowering tops of *Hypericum perforatum* L., harvested during flowering time.

Content: minimum 0.08 per cent of total hypericins, expressed as hypericin ($C_{30}H_{16}O_8$; M_r 504.4) (dried drug).

IDENTIFICATION

A. The branched and bare stem shows 2 more or less prominent longitudinal ridges. The leaves are opposite, sessile, exstipulate, oblong-oval and 15-30 mm long; present on the leaf margins are glands which appear as black dots and over all the surface of the leaves many small, strongly translucent excretory glands which are visible in transmitted light. The flowers are regular and form corymbose clusters at the apex of the stem. They have 5 green, acute sepals, with black secretory glands on the margins; 5 orange-yellow petals, also with black secretory glands on the margins; 3 staminal blades, each divided into many orange-yellow stamens and 3 carpels surmounted by red styles.

The drug may also show the following: immature and ripe fruits and seeds. Immature fruits are green or yellowish, seeds are whitish. Occasional ripe fruits may be present; these are dry trilocular capsules containing numerous seeds, brown, broad or small-ovate, 5-10 mm long, with broad linear or punctiform glands, irregularly striated

ducts, conducting secretions. Ripe seeds are 1-1.3 mm long, cylindrical or trigonous, shortly pointed at both ends, brown or almost black, minutely pitted longitudinally.

B. Microscopic examination (*2.8.23*). The powder is greenish-yellow. Examine under a microscope using *chloral hydrate solution R*. The powder shows the following diagnostic characters (Figure 1438.-1): fragments of the leaf epidermis [A, B] or stems [H] with paracytic [Ab, Ha], anisocytic [Ac, Bb, Hb] or anomocytic [Ae] stomata (*2.8.3*); fragments of the leaf epidermis often accompanied by palisade parenchyma [Ad, Bc]; polygonal cells of the upper epidermis with thickened and beaded walls [Ba]; more or less sinuous, thin-walled cells of the lower epidermis [Aa]; fragments of the leaf and sepal [E] with large, red-pigmented oil glands [Ea] associated with palisade parenchyma [Eb] and small vessels [Ec]; elongated cells of fragments of the petal epidermis with straight or wavy anticlinal walls [J]; vessels [D] with reticulate or pitted walls [Da] and groups of thick-walled fibres [Db]; fragments of the central parenchyma of the stems [K] with lignified and pitted rectangular cells [Ka] sometimes associated with vessels [Kb]; fragments of the anthers [F] showing the central part consisting of small cells containing cluster crystals of calcium oxalate [Fb] and cells from the fibrous layer [Fa]; fragments of the staminal filament with elongated, thin-walled cells with a striated cuticle [C]; numerous pollen grains with 3 germinal pores and a smooth exine, occurring singly [G] or in dense groups.

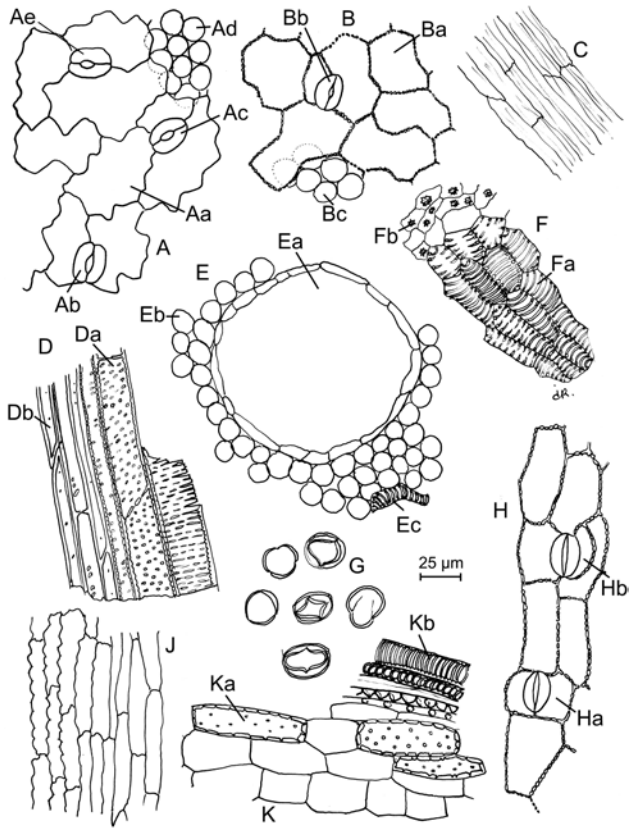

Figure 1438.-1. – *Illustration for identification test B of powdered herbal drug of St. John's wort*

C. Thin-layer chromatography (*2.2.27*).

Test solution. Stir 0.5 g of the powdered herbal drug (500) (*2.9.12*) in 10 mL of *methanol R* in a water-bath at 60 °C for 10 min and filter.

Reference solution. Dissolve 5 mg of *hyperoside R* and 5 mg of *rutin R* in *methanol R*, then dilute to 5 mL with the same solvent.

Plate: *TLC silica gel plate R*.

Mobile phase: *anhydrous formic acid R*, *water R*, *ethyl acetate R* (6:9:90 *V/V/V*).

Application: 10 µL of the test solution and 5 µL of the reference solution, as bands of 10 mm.

Development: over a path of 10 cm.

Drying: at 100-105 °C for 10 min.

Detection: treat with a 10 g/L solution of *diphenylboric acid aminoethyl ester R* in *methanol R* and then with a 50 g/L solution of *macrogol 400 R* in *methanol R*. After about 30 min, examine in ultraviolet light at 365 nm.

Results: the chromatogram obtained with the reference solution shows in the lower third a zone due to rutin and above it a zone due to hyperoside, both with yellow-orange fluorescence. The chromatogram obtained with the test solution shows in the lower third 2 reddish-orange fluorescent zones due to rutin and hyperoside, and in the lower part of the upper third a zone due to pseudohypericin and above it a zone due to hypericin, both with red fluorescence. Other yellow or blue fluorescent zones are visible.

TESTS

Foreign matter (*2.8.2*): maximum 3 per cent of stems with a diameter greater than 5 mm and maximum 2 per cent of other foreign matter.

Loss on drying (*2.2.32*): maximum 10.0 per cent, determined on 1.000 g of the powdered herbal drug (500) (*2.9.12*) by drying in an oven at 105 °C for 2 h.

Total ash (*2.4.16*): maximum 7.0 per cent.

ASSAY

Test solution. In a 100 mL round-bottomed flask, introduce 0.800 g of the powdered herbal drug (500) (*2.9.12*), 60 mL of a mixture of 20 volumes of *water R* and 80 volumes of *tetrahydrofuran R* and a magnetic stirrer. Boil the mixture in a water-bath at 70 °C under a reflux condenser for 30 min. Centrifuge (2 min at 700 *g*) and decant the supernatant into a 250 mL flask. Take up the residue with 60 mL of a mixture of 20 volumes of *water R* and 80 volumes of *tetrahydrofuran R*. Heat again under a reflux condenser for 30 min. Centrifuge (2 min at 700 *g*) and decant the supernatant. Combine the extracts and evaporate to dryness. Take up the residue with 15 mL of *methanol R* with the help of ultrasound and transfer to a 25 mL measuring flask. Rinse the 250 mL flask with *methanol R* and dilute to 25.0 mL with the same solvent. Centrifuge again, filter 10 mL through a syringe filter (0.2 µm). Discard the first 2 millilitres of the filtrate. Introduce 5.0 mL of the filtrate into a measuring flask and dilute to 25.0 mL with *methanol R*.

Compensation liquid: *methanol R*.

Measure the absorbance (*2.2.25*) at 590 nm of the test solution, by comparison with the compensation liquid.

Calculate the percentage content of total hypericins, expressed as hypericin, using the following expression:

$$\frac{A \times 125}{m \times 870}$$

i.e. taking the specific absorbance of hypericin to be 870.

A = absorbance at 590 nm;

m = mass of the herbal drug to be examined, in grams.

01/2013:1874

ST. JOHN'S WORT DRY EXTRACT, QUANTIFIED

Hyperici herbae extractum siccum quantificatum

DEFINITION

Quantified dry extract obtained from *St. John's wort (1438)*.

Content:

- *total hypericins, expressed as hypericin* ($C_{30}H_{16}O_8$; M_r 504.5): 0.10 per cent to 0.30 per cent (anhydrous extract);
- *flavonoids, expressed as rutin* ($C_{27}H_{30}O_{16}$; M_r 610.5): minimum 6.0 per cent (anhydrous extract);
- *hyperforin* ($C_{35}H_{52}O_4$; M_r 536.8): maximum 6.0 per cent (anhydrous extract) and not more than the content stated on the label.

PRODUCTION

The extract is produced from the herbal drug by a suitable procedure using ethanol (50-80 per cent *V/V*) or methanol (50-80 per cent *V/V*).

CHARACTERS

Appearance: brownish-grey powder.

IDENTIFICATION

Thin-layer chromatography (*2.2.27*).

Test solution. Disperse 0.25 g of the extract to be examined in 5 mL of *methanol R*.

Reference solution. Dissolve 5 mg of *rutin R* and 5 mg of *hyperoside R* in *methanol R* and dilute to 10 mL with the same solvent.

Plate: *TLC silica gel plate R* (5-40 µm) [or *TLC silica gel plate R* (2-10 µm)].

Mobile phase: *anhydrous formic acid R*, *water R*, *ethyl acetate R* (6:9:90 *V/V/V*).

Application: 10 µL [or 5 µL] as bands of 10 mm [or 8 mm].

Development: over a path of 10 cm [or 7.5 cm].

Drying: at 100-105 °C for 10 min.

Detection: treat with a 10 g/L solution of *diphenylboric acid aminoethyl ester R* in *methanol R* and then with a 50 g/L solution of *macrogol 400 R* in *methanol R*. Examine after about 30 min in ultraviolet light at 365 nm.

Results: see below the sequence of zones present in the chromatograms obtained with the reference solution and the test solution. Furthermore, other fluorescent zones may be present in the chromatogram obtained with the test solution.

Top of the plate	
	A yellowish-orange fluorescent zone
	2 red fluorescent zones (hypericin and pseudohypericin)
	3 yellowish-orange fluorescent zones
Hyperoside: a yellowish-orange fluorescent zone	A yellowish-orange fluorescent zone (hyperoside)
	Yellow and blue possibly superimposed fluorescent zones
Rutin: a yellowish-orange fluorescent zone	A yellowish-orange fluorescent zone (rutin)
Reference solution	**Test solution**

TESTS

Water (*2.5.12*): maximum 4.0 per cent, determined on 0.5 g.

ASSAY

Total hypericins. Liquid chromatography (*2.2.29*).

Test solution. Dissolve 70.0 mg of the extract to be examined in 25.0 mL of *methanol R*. Sonicate and centrifuge the solution. Expose the solution to a xenon lamp at about 765 W/m^2 for 8 min.

Reference solution. Dissolve a quantity of *St. John's wort dry extract HRS* corresponding to 0.15 mg of hypericin in 25.0 mL of *methanol R*. Sonicate and centrifuge. Expose the solution to a xenon lamp at about 765 W/m^2 for 8 min.

Column:

- *size*: *l* = 0.15 m, Ø = 4.6 mm;
- *stationary phase*: *octadecylsilyl silica gel for chromatography R* (5 µm);
- *temperature*: 40 °C.

Mobile phase: mix 39 volumes of *ethyl acetate R*, 41 volumes of a 15.6 g/L solution of *sodium dihydrogen phosphate R* adjusted to pH 2 with *phosphoric acid R* and 160 volumes of *methanol R*.

Flow rate: 1.0 mL/min.

Detection: spectrophotometer at 590 nm.

Injection: 20 µL.

Run time: 15 min.

Identification of peaks: use the chromatogram supplied with *St. John's wort dry extract HRS* and the chromatogram obtained with the reference solution to identify the peaks due to pseudohypericin and hypericin.

System suitability: reference solution:

- the chromatogram obtained is similar to the chromatogram supplied with *St. John's wort dry extract HRS*;
- *resolution*: minimum 2 between the peaks due to pseudohypericin and hypericin.

Calculate the percentage content of total hypericins, expressed as hypericin, using the following expression:

$$\frac{(A_1 + A_2) \times m_2 \times p}{A_3 \times m_1}$$

A_1 = area of the peak due to pseudohypericin in the chromatogram obtained with the test solution;

A_2 = area of the peak due to hypericin in the chromatogram obtained with the test solution;

A_3 = area of the peak due to hypericin in the chromatogram obtained with the reference solution;

m_1 = mass of the extract to be examined used to prepare the test solution, in grams;

m_2 = mass of *St. John's wort dry extract HRS* used to prepare the reference solution, in grams;

p = percentage content of hypericin in *St. John's wort dry extract HRS*.

Hyperforin and flavonoids. Liquid chromatography (*2.2.29*). *Carry out the assay protected from light.*

Solvent mixture: *water R*, *methanol R* (20:80 *V/V*).

Test solution. Dissolve 75.0 mg of the extract to be examined in 20.0 mL of the solvent mixture. Sonicate and centrifuge.

Reference solution (a). Dissolve 20.0 mg of *rutoside trihydrate CRS* in 200.0 mL of the solvent mixture.

Reference solution (b). Dissolve 75.0 mg of *St. John's wort dry extract HRS* in 20.0 mL of the solvent mixture. Sonicate and centrifuge.

Column:

- *size*: *l* = 0.15 m, Ø = 4.6 mm;

Herbal drugs

– *stationary phase*: *octadecylsilyl silica gel for chromatography R* (3 µm).

Mobile phase:

– *mobile phase A*: *phosphoric acid R*, *water R* (3:1000 *V/V*);

– *mobile phase B*: *phosphoric acid R*, *acetonitrile R* (3:1000 *V/V*);

Time (min)	Mobile phase A (per cent *V/V*)	Mobile phase B (per cent *V/V*)	Flow rate (mL/min)
0 - 8	82	18	0.8
8 - 18	82 → 47	18 → 53	0.8
18 - 18.1	47 → 3	53 → 97	0.8
18.1 - 19	3	97	0.8 → 1.2
19 - 31	3	97	1.2

Detection: spectrophotometer at 360 nm, then at 275 nm after the elution of biapigenin (about 22 min).

Injection: 10 µL.

Identification of peaks: use the chromatogram supplied with *St. John's wort dry extract HRS* and the chromatogram obtained with reference solution (b) to identify the peaks due to rutin, hyperoside, isoquercitroside, quercitroside, quercetin, biapigenin, hyperforin and adhyperforin.

System suitability: reference solution (b):

– the chromatogram obtained is similar to the chromatogram supplied with *St. John's wort dry extract HRS*;

– *resolution*: minimum 2.0 between the peaks due to rutin and hyperoside, and minimum 2.0 between the peaks due to hyperforin and adhyperforin.

Calculate the percentage content of hyperforin using the following expression:

$$\frac{A_4 \times m_4 \times p \times 2.3}{A_5 \times m_3 \times 10}$$

A_4 = area of the peak due to hyperforin in the chromatogram obtained with the test solution;

A_5 = area of the peak due to rutin in the chromatogram obtained with reference solution (a);

m_3 = mass of the extract to be examined used to prepare the test solution, in grams;

m_4 = mass of *rutoside trihydrate CRS* used to prepare reference solution (a), in grams;

2.3 = correction factor for hyperforin with respect to rutin;

p = percentage content of rutin in *rutoside trihydrate CRS*.

Calculate the percentage content of flavonoids, expressed as rutin, using the following expression:

$$\frac{m_4 \times p \times (A_6 + A_7 + A_8 + A_9 + A_{10} + A_{11})}{m_3 \times A_5 \times 10}$$

A_5 = area of the peak due to rutin in the chromatogram obtained with reference solution (a);

A_6 = area of the peak due to rutin in the chromatogram obtained with the test solution;

A_7 = area of the peak due to hyperoside in the chromatogram obtained with the test solution;

A_8 = area of the peak due to isoquercitroside in the chromatogram obtained with the test solution;

A_9 = area of the peak due to quercitroside in the chromatogram obtained with the test solution;

A_{10} = area of the peak due to quercetin in the chromatogram obtained with the test solution;

A_{11} = area of the peak due to biapigenin in the chromatogram obtained with the test solution;

m_3 = mass of the extract to be examined used to prepare the test solution, in grams;

m_4 = mass of *rutoside trihydrate CRS* used to prepare reference solution (a), in grams;

p = percentage content of rutin in *rutoside trihydrate CRS*.

LABELLING

The label states the content of hyperforin.

01/2008:1153

STAR ANISE

Anisi stellati fructus

DEFINITION

Dried composite fruit of *Illicium verum* Hook.f.

Content:

– minimum 70 mL/kg of essential oil (anhydrous drug),

– minimum 86.0 per cent of *trans*-anethole in the essential oil.

CHARACTERS

The fruit carpels are brown.

Odour of anethole.

IDENTIFICATION

A. The fruit generally consists of 8 developed, one-seeded follicles, each 12-22 mm long and 6-12 mm high, radially arranged around a short, central, blunt-ending columella. In some fruits 1 or 2 follicles may be missing, but their position is clearly visible. Each follicle is boat-shaped or boot-shaped, with a greyish-brown dorsal surface showing rough markings and lateral surfaces bearing scars from the neighbouring follicles. One or more follicles are split open along the ventral suture, exposing a single, lenticular, shiny, reddish-brown seed about 8 mm in diameter. The markings on the dorsal surface are not visible from the ventral surface. Some of the follicles (1-3) may be imperfectly developed. Isolated follicles, pedicels and seeds may be present.

B. Reduce to a powder (355) (*2.9.12*). The powder is reddish-brown. Examine under a microscope using *chloral hydrate solution R*. The powder shows the following diagnostic characters: brown epicarpal cells, polygonal in surface view, with a strongly striated cuticle and occasional anomocytic stomata (*2.8.3*); fragments of the endocarp with long palisade-like cells; fragments of the mesocarp with large parenchymatous cells, vessels, oil-containing cells and groups of stone cells; fragments of the seed testa with palisade-like, sclerified, strongly pitted, yellow cells up to 200 µm long; fragments of the columella and the fruit stalk with strongly and irregularly thickened, star-shaped stone cells about 400 µm long and 150 µm wide; rhomboidal or rectangular crystals of calcium oxalate.

C. Examine the chromatograms obtained in test B for *Illicium anisatum* (= *I. religiosum*) and certain other *Illicium* spp.

Results: see below the sequence of the zones present in the chromatograms obtained with the reference solution and the test solution. Furthermore, other weaker zones may be present in the chromatogram obtained with the test solution.

Herbal drugs

Top of the plate	
———	———
Caffeic acid: a light blue fluorescent zone	
Quercitrin: a brownish-yellow fluorescent zone	
	A brownish-yellow fluorescent zone
———	———
	A greenish fluorescent zone
Hyperoside: a brownish-yellow fluorescent zone	A brownish-yellow fluorescent zone
Chlorogenic acid: a light blue fluorescent zone	
	A green fluorescent zone
Rutin: a brownish-yellow fluorescent zone	A brownish-yellow fluorescent zone
Reference solution	**Test solution**

TESTS

***Illicium anisatum* (= *I. religiosum*) and certain other *Illicium* spp.**

A. Adulteration with *Illicium anisatum* or certain other *Illicium* spp. is indicated by the presence of fruits mainly consisting of more than 8 follicles; fruits either smaller than 2.5 cm or greater than 3.5 cm; follicles with the suture edged with a thickening extending to the neighbouring follicle, or with dorsal markings visible from the ventral surface; follicles somewhat undulate and ending in a fine beak or a small, ventrally turned hook; follicles with a profile fitting into a rectangle; pedicels more than 5 cm long; seedless fruits; seeds either very flat or almost spherical.

B. Thin-layer chromatography (*2.2.27*).

Test solution. To 2.0 g of the powdered herbal drug (355) (*2.9.12*) add 10 mL of *methanol R* and heat under a reflux condenser in a water-bath at 60 °C for 5 min. Allow to cool and filter.

Reference solution. Dissolve 1 mg of *caffeic acid R*, 1 mg of *chlorogenic acid R*, 2.5 mg of *quercitrin R*, 2.5 mg of *rutin R* and 2.5 mg of *hyperoside R* in 10 mL of *methanol R*.

Plate: *TLC silica gel plate R* (2-10 µm).

Mobile phase: *anhydrous formic acid R*, *glacial acetic acid R*, *water R*, *ethyl acetate R* (11:11:26:100 *V/V/V/V*).

Application: 5 µL as bands.

Development: over a path of 6 cm.

Drying: in a current of warm air.

Detection: spray with a 10 g/L solution of *diphenylboric acid aminoethyl ester R* in *methanol R* and then with a 50 g/L solution of *macrogol 400 R* in *methanol R*; after 30 min, examine in ultraviolet light at 365 nm.

Results: the chromatogram obtained with the test solution shows no brownish-yellow fluorescent zone at or above the position of the zone due to quercitrin in the chromatogram obtained with the reference solution. No yellow fluorescent zone is seen at or above the position of the zone due to caffeic acid in the chromatogram obtained with the reference solution. No brownish-yellow fluorescent zone is seen directly above the zone due to hyperoside in the chromatogram obtained with the reference solution.

Water (*2.2.13*): maximum 100 mL/kg, determined by distillation on 20.0 g of the powdered herbal drug (355) (*2.9.12*).

Total ash (*2.4.16*): maximum 4.0 per cent.

ASSAY

Essential oil (*2.8.12*). Use a 250 mL round-bottomed flask and 100 mL of *water R* as the distillation liquid. Immediately before the determination, reduce 50.0 g of the drug to a coarse powder (1400) (*2.9.12*) and mix. Further reduce about 10.0 g of this mixture to a finer powder (710) (*2.9.12*). Use 2.50 g of the powder for the determination. Introduce 0.50 mL of *xylene R* into the graduated tube. Distil at a rate of 2-3 mL/min for 2 h.

***trans*-Anethole**. Gas chromatography (*2.2.28*): use the normalisation procedure.

Test solution. Dilute the mixture of essential oil and *xylene R* obtained in the assay of essential oil to 5.0 mL with *xylene R* by rinsing the apparatus.

Reference solution. To 1.0 mL of *xylene R* add 20 µL of *estragole R*, 20 mg of *α-terpineol R* and 60 µL of *anethole R*.

Column:

- *material*: fused silica;
- *size*: *l* = 30 m, Ø = 0.25 mm;
- *stationary phase*: *macrogol 20 000 R*.

Carrier gas: *helium for chromatography R*.

Flow rate: 1.0 mL/min.

Split ratio: 1:100.

Temperature:

	Time (min)	Temperature (°C)
Column	0 - 5	60
	5 - 80	60 → 210
	80 - 95	210
Injection port		200
Detector		220

Detection: flame ionisation.

Injection: 1 µL.

Elution order: order indicated in the preparation of the reference solution.

System suitability: reference solution:

- *resolution*: minimum 5 between the peaks due to estragole and α-terpineol.

Use the retention times from the chromatogram obtained with the reference solution locate the components of the reference solution in the chromatogram obtained with the test solution.

Calculate the percentage content of *trans*-anethole. Disregard any peak due to the solvent or with an area less than 0.05 per cent of the area of the principal peak in the chromatogram obtained with the test solution.

01/2008:2108
corrected 7.0

STAR ANISE OIL

Anisi stellati aetheroleum

DEFINITION

Essential oil obtained by steam distillation from the dry ripe fruits of *Illicium verum* Hook.f.

CHARACTERS

Appearance: clear, colourless or pale yellow liquid.

IDENTIFICATION

First identification: *B*.

Second identification: *A*.

A. Thin-layer chromatography (*2.2.27*).

Test solution. Dissolve 1 g of the substance to be examined in *toluene R* and dilute to 10 mL with the same solvent.

Herbal drugs

Reference solution. Dissolve 10 µL of *linalol R*, 30 µL of *anisaldehyde R* and 200 µL of *anethole R* and in *toluene R* and dilute to 15 mL with the same solvent. Dilute 1 mL of this solution to 5 mL with *toluene R*.

Plate: *TLC silica gel F_{254} plate R*.

Mobile phase: *ethyl acetate R*, *toluene R* (7:93 *V/V*).

Application: 5 µL as bands of 10 mm (for normal TLC plates) or 2 µL as bands of 10 mm (for fine particle TLC plates).

Development: over a path of 15 cm (for normal TLC plates) or over a path of 6 cm (for fine particle size plates).

Drying: in air.

Detection A: examine in ultraviolet light at 254 nm.

Results A: see below the sequence of zones present in the chromatograms obtained with the reference solution and the test solution. Furthermore, other zones may be present in the chromatogram obtained with the test solution.

Top of the plate	
	A quenching zone, partly separated
Anethole: a quenching zone	A very strong quenching zone (anethole)
_____	_____
Anisaldehyde: a quenching zone	A quenching zone (anisaldehyde)
_____	_____
Reference solution	**Test solution**

Detection B: spray with *methyl 4-acetylbenzoate reagent R* and heat at 100-105 °C for 10 min; examine the still hot plate in daylight within 10 min.

Results B: see below the sequence of zones present in the chromatograms obtained with the reference solution and the test solution. Furthermore, other zones may be present in the chromatogram obtained with the test solution.

Top of the plate	
	A violet-brown zone, not fully separated
Anethole: a brown zone	A very strong brown zone (anethole)
_____	_____
Anisaldehyde: a yellow zone	A yellow zone (anisaldehyde)
_____	_____
Linalol: a grey zone	A grey zone (linalol)
Reference solution	**Test solution**

B. Examine the chromatograms obtained in the test for chromatographic profile.

Results: the characteristic peaks in the chromatogram obtained with the test solution are similar in retention time to those in the chromatogram obtained with the reference solution.

TESTS

Relative density (*2.2.5*): 0.979 to 0.985.

Refractive index (*2.2.6*): 1.553 to 1.556.

Freezing point (*2.2.18*): 15 °C to 19 °C.

Fenchone. Gas chromatography (*2.2.28*) as described in the test for chromatographic profile with the following modifications.

Test solution. Dissolve 400 µL of the substance to be examined in 2.0 mL of *hexane R*.

Reference solution (a). Dilute 10 µL of *fenchone R* to 1.2 g with *hexane R*.

Reference solution (b). Dilute 100 µL of reference solution (a) to 100 mL with *hexane R*.

System suitability: reference solution (b):

– *signal-to-noise ratio*: minimum 10 for the principal peak.

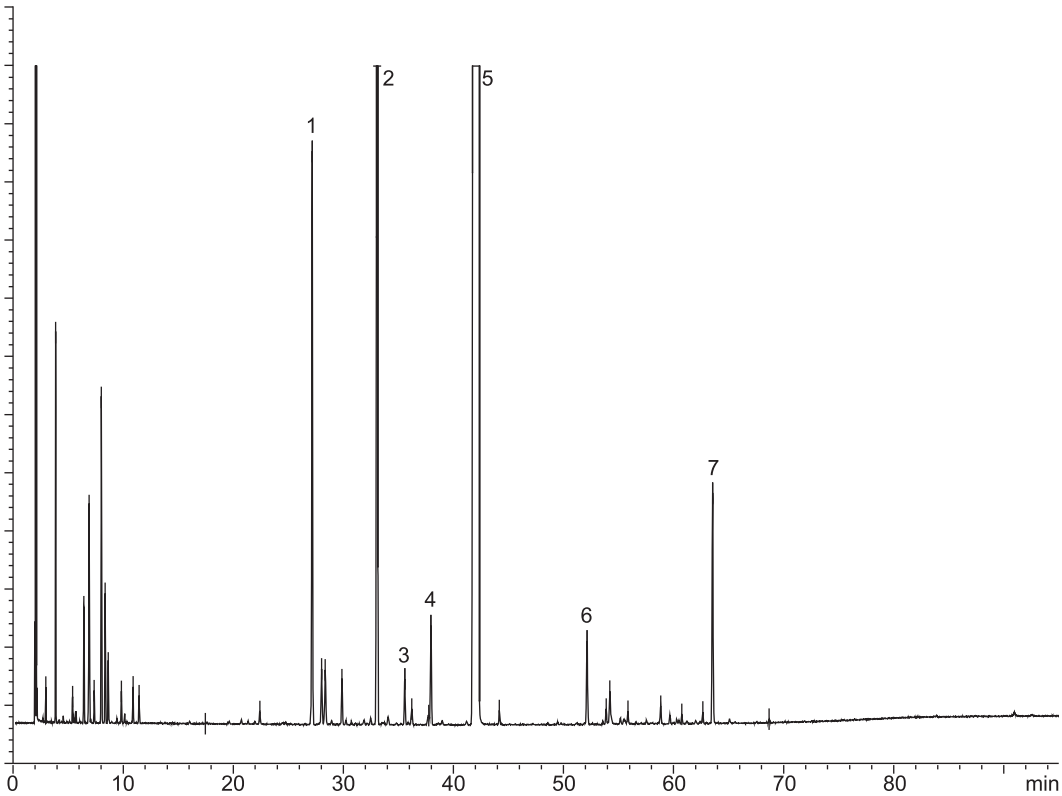

1. linalol
2. estragole
3. α-terpineol
4. *cis*-anethole
5. *trans*-anethole
6. anisaldehyde
7. foeniculin

Figure 2108.-1. – *Chromatogram for the test for chromatographic profile of star anise oil*

Limit:

– *fenchone*: maximum 0.01 per cent.

Pseudoisoeugenyl 2-methylbutyrate. Gas chromatography (*2.2.28*) as described in the test for chromatographic profile with the following modifications.

Test solution. The substance to be examined.

Reference solution (a). Dilute 10 mg of the test solution to 1.000 g with *hexane R*. Dilute 0.5 mL of this solution to 100 mL with *hexane R*.

Reference solution (b). *Pseudoisoeugenyl 2-methylbutyrate for peak identification CRS*.

System suitability:

– the chromatogram obtained with reference solution (b) is similar to the chromatogram provided with *pseudoisoeugenyl 2-methylbutyrate for peak identification CRS*.

– *signal-to-noise ratio*: minimum 10 for the principal peak in the chromatogram obtained with reference solution (a).

Limit: locate the peak due to pseudoisoeugenyl 2-methylbutyrate by comparison with the chromatogram provided with *pseudoisoeugenyl 2-methylbutyrate for peak identification CRS*.

– *pseudoisoeugenyl 2-methylbutyrate*: maximum 0.01 per cent.

Fatty oils and resinified essential oils (*2.8.7*). It complies with the test for fatty oils and resinified essential oils.

Chromatographic profile. Gas chromatography (*2.2.28*): use the normalisation procedure.

Test solution. Dissolve 200 µL of the substance to be examined in 1.0 mL of *hexane R*.

Reference solution. To 1.0 mL of *hexane R*, add 20 µL of *linalol R*, 20 µL of *estragole R*, 20 µL of *α-terpineol R*, 60 µL of *anethole R* and 30 µL of *anisaldehyde R*.

Column:

– *material*: fused silica,

– *size*: *l* = 30 m, Ø = 0.25 mm,

– *stationary phase*: *macrogol 20 000 R* (film thickness 0.25 µm).

Carrier gas: *helium for chromatography R*.

Flow rate: 1.0 mL/min.

Split ratio: 1:100.

Temperature:

	Time (min)	Temperature (°C)
Column	0 - 5	60
	5 - 80	60 → 210
	80 - 95	210
Injection port		200
Detector		220

Detection: flame ionisation.

Injection: 0.2 µL.

Elution order: order indicated in the composition of the reference solution; record the retention times of these substances.

System suitability: reference solution:

– *resolution*: minimum 1.5 between the peaks due to estragole and α-terpineol.

Using the retention times determined from the chromatogram obtained with the reference solution, locate the components of the reference solution in the chromatogram obtained with the test solution and locate *cis*-anethole and foeniculin using the chromatogram shown in Figure 2108.-1 (disregard any peak due to hexane).

Determine the percentage content of these components. The percentages are within the following ranges:

– *linalol*: 0.2 per cent to 2.5 per cent,

– *estragole*: 0.5 per cent to 6.0 per cent,

– *α-terpineol*: maximum 0.3 per cent,

– *cis-anethole*: 0.1 per cent to 0.5 per cent,

– *trans-anethole*: 86 per cent to 93 per cent,

– *anisaldehyde*: 0.1 per cent to 0.5 per cent,

– *foeniculin*: 0.1 per cent to 3.0 per cent.

STORAGE

At a temperature not exceeding 25 °C.

01/2012:0246

STRAMONIUM LEAF

Stramonii folium

DEFINITION

Dried leaf or dried leaf and flowering, and occasionally fruit-bearing, tops of *Datura stramonium* L. and its varieties.

Content: minimum 0.25 per cent of total alkaloids, expressed as hyoscyamine ($C_{17}H_{23}NO_3$; M_r 289.4) (dried drug). The alkaloids consist mainly of hyoscyamine with varying proportions of hyoscine (scopolamine).

CHARACTERS

Unpleasant odour.

IDENTIFICATION

A. The leaves are dark brownish-green or dark greyish-green with a short petiole, often much twisted and shrunken during drying, thin and brittle, ovate or triangular-ovate, dentately lobed with an acuminate apex and often unequal at the base. Young leaves are pubescent on the veins, older leaves are nearly glabrous. Stems are green or purplish-green, slender, curved and twisted, wrinkled longitudinally and sometimes wrinkled transversely, branched dichasially, with a single flower or an immature fruit in the fork. Flowers, on short pedicels, have a gamosepalous calyx with 5 lobes and trumpet-shaped brownish-white or purplish corolla. The fruit is a capsule, usually covered with numerous short, stiff emergences; seeds are brown or black with a minutely pitted testa.

B. Microscopic examination (*2.8.23*). The powder is greyish-green. Examine under a microscope using *chloral hydrate solution R*. The powder shows the following diagnostic characters (Figure 0246.-1): fragments of upper [A] and lower [C] epidermises of the lamina, in surface view, showing cells with slightly wavy anticlinal walls and a smooth cuticle accompanied by palisade [Aa] and spongy [Ca] parenchyma; anisocytic [Ac, Cb] and anomocytic [Ab] stomata (*2.8.3*), more frequent on the lower epidermis; fragments of covering trichomes, conical [E], uniseriate with 3-5 cells with warty walls, some of them collapsed [Ea]; glandular trichomes, short and clavate, in side view [B] with heads formed by 2-7 cells; dorsiventral mesophyll in transverse section [F], with a single layer of palisade cells [Fa] and a spongy parenchyma [Fb] containing cluster crystals of calcium oxalate [Fc]; fragments of spongy parenchyma [D] with some cells containing small cluster crystals of calcium oxalate [Db], associated with annularly and spirally thickened vessels [Da], in surface view. The powdered herbal drug may also show: fibres and reticulately thickened vessels from the stems; subspherical pollen grains about 60-80 µm in diameter with 3 germinal pores and a nearly smooth exine [G]; fragments of the corolla [H] with wavy-walled cells [Ha] and underlying mesophyll [Hb] with some cells containing prisms [Hc] or

Herbal drugs

cluster crystals [Hd] of calcium oxalate; seed fragments containing yellowish-brown, sinuous, thick-walled sclereids of the testa [J], and occasional prisms and microsphenoidal crystals of calcium oxalate.

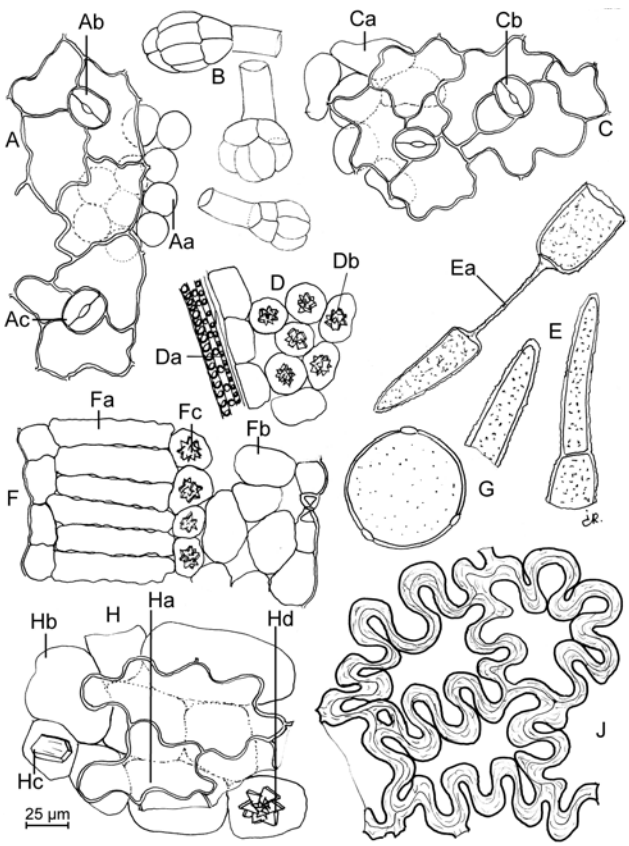

Figure 0246.-1. – *Illustration for identification test B of powdered herbal drug of stramonium leaf*

C. Examine the chromatograms obtained in the chromatography test.

Results: the principal zones in the chromatograms obtained with the test solution are similar in position, colour and size to the principal zones in the chromatogram obtained with the same volume of the reference solution.

D. Shake 1 g of the powdered herbal drug (180) (*2.9.12*) with 10 mL of *0.05 M sulfuric acid* for 2 min. Filter and add to the filtrate 1 mL of *concentrated ammonia R* and 5 mL of *water R*. Shake cautiously with 15 mL of *peroxide-free ether R*, avoiding the formation of an emulsion. Separate the ether layer and dry over *anhydrous sodium sulfate R*. Filter and evaporate the ether in a porcelain dish. Add 0.5 mL of *nitric acid R* and evaporate to dryness on a water-bath. Add 10 mL of *acetone R* and, dropwise, a 30 g/L solution of *potassium hydroxide R* in *ethanol (96 per cent) R*. A deep violet colour develops.

TESTS

Chromatography. Thin-layer chromatography (*2.2.27*).

Test solution. To 1.0 g of the powdered herbal drug (180) (*2.9.12*) add 10 mL of *0.05 M sulfuric acid*, shake for 15 min and filter. Wash the filter with *0.05 M sulfuric acid* until 25 mL of filtrate is obtained. To the filtrate add 1 mL of *concentrated ammonia R* and shake with 2 quantities, each of 10 mL, of *peroxide-free ether R*. If necessary, separate by centrifugation. Dry the combined ether layers over *anhydrous sodium sulfate R*, filter and evaporate to dryness on a water-bath. Dissolve the residue in 0.5 mL of *methanol R*.

Reference solution. Dissolve 50 mg of *hyoscyamine sulfate R* in 9 mL of *methanol R*. Dissolve 15 mg of *hyoscine hydrobromide R* in 10 mL of *methanol R*. Mix 3.8 mL of the hyoscyamine sulfate solution and 4.2 mL of the hyoscine hydrobromide solution and dilute to 10 mL with *methanol R*.

Plate: *TLC silica gel G plate R*.

Mobile phase: *concentrated ammonia R*, *water R*, *acetone R* (3:7:90 *V/V/V*).

Application: 10 µL and 20 µL of each solution, as bands of 20 mm by 3 mm, leaving 1 cm between the bands.

Development: over a path of 10 cm.

Drying: at 100-105 °C for 15 min; allow to cool.

Detection A: spray with *potassium iodobismuthate solution R2*, using about 10 mL for a plate 200 mm square, until the orange or brown zones become visible against a yellow background.

Results A: the zones in the chromatograms obtained with the test solution are similar in position (hyoscyamine in the lower third, hyoscine in the upper third of the chromatograms) and colour to those in the chromatograms obtained with the reference solution. The zones in the chromatograms obtained with the test solution are at least equal in size to the corresponding zones in the chromatogram obtained with the same volume of the reference solution. Faint secondary zones may appear, particularly in the middle of the chromatogram obtained with 20 µL of the test solution or near the point of application in the chromatogram obtained with 10 µL of the test solution.

Detection B: spray with *sodium nitrite solution R* until the coating is transparent; examine after 15 min.

Results B: the zones due to hyoscyamine in the chromatograms obtained with the reference solution and the test solution change from brown to reddish-brown but not to greyish-blue (atropine) and any secondary zones disappear.

Foreign matter (*2.8.2*): maximum 3 per cent of stems with a diameter greater than 5 mm.

Total ash (*2.4.16*): maximum 20.0 per cent.

Ash insoluble in hydrochloric acid (*2.8.1*): maximum 4.0 per cent.

ASSAY

a) Determine the loss on drying (*2.2.32*) on 2.000 g of the powdered herbal drug (180) (*2.9.12*) by drying in an oven at 105 °C.

b) Moisten 10.0 g of the powdered herbal drug (180) (*2.9.12*) with a mixture of 5 mL of *ammonia R*, 10 mL of *ethanol (96 per cent) R* and 30 mL of *peroxide-free ether R* and mix thoroughly. Transfer the mixture to a suitable percolator, if necessary with the aid of the extracting mixture. Allow to macerate for 4 h and percolate with a mixture of 1 volume of *chloroform R* and 3 volumes of *peroxide-free ether R* until the alkaloids are completely extracted. Evaporate to dryness a few millilitres of the liquid flowing from the percolator, dissolve the residue in *0.25 M sulfuric acid* and verify the absence of alkaloids using *potassium tetraiodomercurate solution R*. Concentrate the percolate to about 50 mL by distilling on a water-bath and transfer it to a separating funnel, rinsing with *peroxide-free ether R*. Add a quantity of *peroxide-free ether R* equal to at least 2.1 times the volume of the percolate to produce a liquid of a density well below that of water. Shake the solution with no fewer than 3 quantities, each of 20 mL, of *0.25 M sulfuric acid*, separate the 2 layers by centrifugation if necessary and transfer the acid layers to a 2nd separating funnel. Make the acid layer alkaline with *ammonia R* and shake with 3 quantities, each of 30 mL, of *chloroform R*. Combine the chloroform layers, add 4 g of *anhydrous sodium sulfate R* and allow to stand for 30 min with occasional shaking. Decant the chloroform and wash the anhydrous sodium sulfate with 3 quantities, each of 10 mL, of *chloroform R*. Add the washings to the chloroform extract, evaporate to dryness on a water-bath and heat in an oven at 100-105 °C for 15 min. Dissolve the residue in a few

millilitres of *chloroform R*, add 20.0 mL of *0.01 M sulfuric acid* and remove the chloroform by evaporation on a water-bath. Titrate the excess of acid with *0.02 M sodium hydroxide* using *methyl red mixed solution R* as indicator.

Calculate the percentage content of total alkaloids, expressed as hyoscyamine, using the following expression:

$$\frac{57.88 \times (20 - n)}{(100 - d) \times m}$$

d = loss on drying, as a percentage;

n = volume of *0.02 M sodium hydroxide*, in millilitres;

m = mass of the powdered herbal drug, in grams.

STORAGE

Protected from moisture.

01/2008:0247

STRAMONIUM, PREPARED

Stramonii pulvis normatus

DEFINITION

Stramonium leaf powder (180) (*2.9.12*) adjusted, if necessary, by the addition of powdered lactose or stramonium leaf of lower content of total alkaloids.

Content: 0.23 per cent to 0.27 per cent of total alkaloids, expressed as hyoscyamine ($C_{17}H_{23}NO_3$; M_r 289.4) (dried drug).

CHARACTERS

Appearance: greyish-green powder.

Unpleasant odour.

IDENTIFICATION

A. Examine under a microscope using *chloral hydrate solution R*. The powder shows the following diagnostic characters: fragments of leaf lamina showing epidermal cells with slightly wavy anticlinal walls and smooth cuticle; stomata are more frequent on the lower epidermis (anisocytic and anomocytic) (*2.8.3*); covering trichomes are conical, uniseriate with 3-5 cells and warty walls; glandular trichomes are short and clavate with heads formed by 2-7 cells; dorsiventral mesophyll, with a single layer of palisade cells and a spongy parenchyma containing cluster crystals of calcium oxalate; annularly and spirally thickened vessels. The powdered herbal drug may also show the following diagnostic characters: fibres and reticulately thickened vessels from the stems; subspherical pollen grains usually about 60-80 µm in diameter with 3 germinal pores and nearly smooth exine; fragments of the corolla with papillose epidermis; seed fragments containing yellowish-brown, sinuous, thick-walled sclereids of testa; occasional prisms and microsphenoidal crystals of calcium oxalate. Examined in *glycerol (85 per cent) R*, it may be seen to contain lactose crystals.

B. Examine the chromatograms obtained in the Chromatography test.

   Results: the principal zones in the chromatogram obtained with the test solution are similar in position, colour and size to the principal zones in the chromatogram obtained with the same volume of the reference solution.

C. Shake 1 g with 10 mL of *0.05 M sulfuric acid* for 2 min. Filter and add to the filtrate 1 mL of *concentrated ammonia R* and 5 mL of *water R*. Shake cautiously with 15 mL of *peroxide-free ether R*, avoiding the formation of an emulsion. Separate the ether layer and dry over *anhydrous sodium sulfate R*. Filter and evaporate the ether in a porcelain dish. Add 0.5 mL of *nitric acid R* and evaporate to dryness on a water-bath. Add 10 mL of *acetone R* and, dropwise, a 30 g/L solution of *potassium hydroxide R* in *ethanol (96 per cent) R*. A deep violet colour develops.

TESTS

Chromatography. Thin-layer chromatography (*2.2.27*).

Test solution. To 1.0 g of the drug to be examined add 10 mL of *0.05 M sulfuric acid*, shake for 15 min and filter. Wash the filter with *0.05 M sulfuric acid* until 25 mL of filtrate is obtained. To the filtrate add 1 mL of *concentrated ammonia R* and shake with 2 quantities, each of 10 mL, of *peroxide-free ether R*. If necessary, separate by centrifugation. Dry the combined ether layers over *anhydrous sodium sulfate R*, filter and evaporate to dryness on a water-bath. Dissolve the residue in 0.5 mL of *methanol R*.

Reference solution. Dissolve 50 mg of *hyoscyamine sulfate R* in 9 mL of *methanol R*. Dissolve 15 mg of *hyoscine hydrobromide R* in 10 mL of *methanol R*. Mix 3.8 mL of the hyoscyamine sulfate solution and 4.2 mL of the hyoscine hydrobromide solution and dilute to 10 mL with *methanol R*.

Plate: *TLC silica gel G plate R*.

Mobile phase: *concentrated ammonia R*, *water R*, *acetone R* (3:7:90 *V/V/V*).

Application: 10 µL and 20 µL of each solution as bands of 20 mm by 3 mm, leaving 1 cm between the bands.

Development: over a path of 10 cm.

Drying: at 100-105 °C for 15 min and allow to cool.

Detection A: spray with *potassium iodobismuthate solution R2*, using about 10 mL for a plate 200 mm square, until the orange or brown zones become visible against a yellow background.

Results A: the zones in the chromatograms obtained with the test solution are similar in position (hyoscyamine in the lower third, hyoscine in the upper third of the chromatogram) and colour to those in the chromatograms obtained with the reference solution. The zones in the chromatograms obtained with the test solution are at least equal in size to the corresponding zones in the chromatogram obtained with the same volume of the reference solution. Faint secondary zones may appear, particularly in the middle of the chromatogram obtained with 20 µL of the test solution or near the point of application in the chromatogram obtained with 10 µL of the test solution.

Detection B: spray with *sodium nitrite solution R* until the coating is transparent; examine after 15 min.

Results B: the zones due to hyoscyamine in the chromatograms obtained with the test solution and the reference solution change from brown to reddish-brown but not to greyish-blue (atropine) and any secondary zones disappear.

Loss on drying (*2.2.32*): maximum 5.0 per cent, determined on 1.000 g by drying in an oven at 105 °C.

Total ash (*2.4.16*): maximum 20.0 per cent.

Ash insoluble in hydrochloric acid (*2.8.1*): maximum 4.0 per cent.

ASSAY

a) Determine the loss on drying (*2.2.32*) on 2.000 g by drying in an oven at 105 °C.

b) Moisten 10.0 g with a mixture of 5 mL of *ammonia R*, 10 mL of *ethanol (96 per cent) R* and 30 mL of *peroxide-free ether R* and mix thoroughly. Transfer the mixture to a suitable percolator, if necessary with the aid of the extracting mixture. Allow to macerate for 4 h and percolate with a mixture of 1 volume of *chloroform R* and 3 volumes of *peroxide-free ether R* until the alkaloids are completely extracted. Evaporate to dryness a few millilitres of the liquid flowing from the percolator, dissolve the residue in *0.25 M sulfuric acid* and verify the absence of alkaloids using *potassium tetraiodomercurate solution R*. Concentrate the percolate to about 50 mL by distilling on a water-bath and transfer it to

a separating funnel, rinsing with *peroxide-free ether R*. Add a quantity of *peroxide-free ether R* equal to at least 2.1 times the volume of the percolate to produce a liquid of a density well below that of water. Shake the solution with no fewer than 3 quantities, each of 20 mL, of *0.25 M sulfuric acid*, separate the 2 layers by centrifugation if necessary and transfer the acid layers to a 2nd separating funnel. Make the acid layer alkaline with *ammonia R* and shake with 3 quantities, each of 30 mL, of *chloroform R*. Combine the chloroform layers, add 4 g of *anhydrous sodium sulfate R* and allow to stand for 30 min with occasional shaking. Decant the chloroform and wash the sodium sulfate with 3 quantities, each of 10 mL, of *chloroform R*. Add the washings to the chloroform extract, evaporate to dryness on a water-bath and heat in an oven at 100-105 °C for 15 min. Dissolve the residue in a few millilitres of *chloroform R*, add 20.0 mL of *0.01 M sulfuric acid* and remove the chloroform by evaporation on a water-bath. Titrate the excess of acid with *0.02 M sodium hydroxide* using *methyl red mixed solution R* as indicator.

Calculate the percentage content of total alkaloids, expressed as hyoscyamine, using the following expression:

$$\frac{57.88\,(20-n)}{(100-d)\,m}$$

d = loss on drying, as a percentage;

n = volume of *0.02 M sodium hydroxide*, in millilitres;

m = mass of the herbal drug, in grams.

STORAGE

In an airtight container.

01/2008:1811

SWEET ORANGE OIL

Aurantii dulcis aetheroleum

DEFINITION

Essential oil obtained without heating, by suitable mechanical treatment from the fresh peel of the fruit of *Citrus sinensis* (L.) Osbeck (*Citrus aurantium* L. var. *dulcis* L.). A suitable antioxidant may be added.

CHARACTERS

Appearance: clear, pale yellow or orange, mobile liquid, which may become cloudy when chilled.

Characteristic odour of fresh orange peel.

IDENTIFICATION

First identification: B.

Second identification: A.

A. Thin-layer chromatography (*2.2.27*).

Examine the chromatograms obtained in the test for bergapten.

Results A: see below the sequence of the zones present in the chromatograms obtained with the reference solution and the test solution.

Top of the plate	
———	———
Bergapten: a greenish-yellow fluorescent zone	
———	———
	Many blue fluorescent zones
Reference solution	**Test solution**

Results B: see below the sequence of the zones present in the chromatograms obtained with the reference solution and the test solution.

Top of the plate	
	A brown fluorescent zone
Linalyl acetate: a brownish-orange fluorescent zone	A faint brownish-orange fluorescent zone (linalyl acetate)
———	———
	Many orange fluorescent zones
Linalol: a brownish-orange fluorescent zone	A brownish-orange fluorescent zone (linalol)
Bergapten: a faint greenish-yellow fluorescent zone	
	Many brownish-orange fluorescent zones
———	———
	Many blue fluorescent zones
Reference solution	**Test solution**

B. Examine the chromatograms obtained in the test for chromatographic profile.

Results: the characteristic peaks in the chromatogram obtained with the test solution are similar in retention time to those in the chromatogram obtained with the reference solution.

TESTS

Relative density (*2.2.5*): 0.842 to 0.850.

Refractive index (*2.2.6*): 1.470 to 1.476.

Optical rotation (*2.2.7*): + 94° to + 99°.

Peroxide value (*2.5.5, Method B*): maximum 20.

Fatty oils and resinified essential oils (*2.8.7*). It complies with the test for fatty oils and resinified essential oils.

Bergapten. Thin-layer chromatography (*2.2.27*).

Test solution. Dilute 0.2 mL of the substance to be examined in 1 mL of *alcohol R*.

Reference solution. Dissolve 2 mg of *bergapten R*, 10 µL of *linalol R* and 20 µL of *linalyl acetate R* in 10 mL of *alcohol R*.

Plate: *TLC silica gel plate R*.

Mobile phase: *ethyl acetate R*, *toluene R* (15:85 *V/V*).

Application: 10 µL, as bands.

Development: over a path of 15 cm.

Drying: in air.

Detection A: examine in ultraviolet light at 365 nm.

Results A: the chromatogram obtained with the test solution shows no greenish-yellow fluorescent zone present in the chromatogram obtained with the reference solution.

Detection B: spray with *anisaldehyde solution R* and heat at 100-105 °C for 10 min; examine the plate in ultraviolet light at 365 nm.

Chromatographic profile. Gas chromatography (*2.2.28*): use the normalisation procedure.

Test solution. Dilute 300 µL of the substance to be examined to 1 mL with *acetone R*.

Reference solution (a). Dilute 10 µL of *α-pinene R*, 10 µL of *β-pinene R*, 10 µL of *sabinene R*, 20 µL of *β-myrcene R*, 800 µL of *limonene R*, 10 µL of *octanal R*, 10 µL of *decanal R*, 10 µL of *linalol R*, 10 µL of *citral R* (composed of neral and geranial) and 10 µL of *valencene R* in 1 mL of *acetone R*.

Reference solution (b). Dissolve 5 µL of *β-pinene R* in 10 mL of *acetone R*. Dilute 0.5 mL to 10 mL with *acetone R*.

Column:

– *material*: fused silica,

– *size*: *l* = 30 m, Ø = 0.53 mm,

Herbal drugs

– *stationary phase*: *macrogol 20 000 R* (film thickness 1 µm).

Carrier gas: *helium for chromatography R*.

Flow rate: 1 mL/min.

Split ratio: 1:100.

Temperature:

	Time (min)	Temperature (°C)
Column	0 - 6	50
	6 - 31	50 → 150
	31 - 41	150 → 180
	41 - 55	180
Injection port		250
Detector		250

Detection: flame ionisation.

Injection: 0.5 µL.

Elution order: order indicated in the composition of reference solution (a). Record the retention times of these substances.

System suitability: reference solution (a)

– *resolution*: minimum 3.9 between the peaks due to β-pinene and sabinene and minimum 1.5 between the peaks due to valencene and geranial.

Using the retention times determined from the chromatogram obtained with reference solution (a), locate the components of reference solution (a) in the chromatogram obtained with the test solution.

Determine the percentage content of these components. The limits are within the following ranges:

– *α-pinene*: 0.4 per cent to 0.6 per cent,
– *β-pinene*: 0.02 per cent to 0.3 per cent,
– *sabinene*: 0.2 per cent to 1.1 per cent,
– *β-myrcene*: 1.7 per cent to 2.5 per cent,
– *limonene*: 92.0 per cent to 97.0 per cent,
– *octanal*: 0.1 per cent to 0.4 per cent,
– *decanal*: 0.1 per cent to 0.4 per cent,
– *linalol*: 0.2 per cent to 0.7 per cent,
– *neral*: 0.02 per cent to 0.10 per cent,
– *valencene*: 0.02 per cent to 0.5 per cent,
– *geranial*: 0.03 per cent to 0.20 per cent.

Disregard limit: area of the peak in the chromatogram obtained with reference solution (b) (0.01 per cent).

Residue on evaporation: 1.0 per cent to 5.0 per cent.

Evaporate 5.0 g to dryness on a water-bath and dry at 100-105 °C for 4 h.

STORAGE

At a temperature not exceeding 25 °C.

01/2008:1837
corrected 7.0

TEA TREE OIL

Melaleucae aetheroleum

DEFINITION

Essential oil obtained by steam distillation from the foliage and terminal branchlets of *Melaleuca alternifolia* (Maiden and Betch) Cheel, *M. linariifolia* Smith, *M. dissitiflora* F. Mueller and/or other species of *Melaleuca*.

CHARACTERS

Appearance: clear, mobile, colourless or pale yellow liquid.

Characteristic odour.

IDENTIFICATION

First identification: *B*.

Second identification: *A*.

A. Thin-layer chromatography (*2.2.27*).

Test solution. Dissolve 0.1 mL of the substance to be examined in 5 mL of *heptane R*.

Reference solution. Dissolve 30 µL of *cineole R*, 60 µL of *terpinen-4-ol R* and 10 mg of *α-terpineol R* in 10 mL of *heptane R*.

Plate: *TLC silica gel plate R*.

Mobile phase: *ethyl acetate R*, *heptane R* (20:80 *V/V*).

Application: 10 µL, as bands.

Development: over a path of 10 cm.

Drying: in air.

Detection: spray with *anisaldehyde solution R*. Heat at 100-105 °C for 5-10 min while observing. Examine in daylight.

Results: see below the sequence of the zones present in the chromatograms obtained with the reference solution and the test solution. Furthermore, other zones are present in the chromatogram obtained with the test solution.

Top of the plate	
Cineole: a violet-brown zone	A violet-brown zone, less intense (cineole)
Terpinen-4-ol: a brownish-violet zone	A brownish-violet zone terpinen-4-ol)
α-terpineol: a violet or brownish-violet zone	A violet or brownish-violet zone (α-terpineol)
Reference solution	**Test solution**

B. Examine the chromatograms obtained in the test for chromatographic profile.

Results: the characteristic peaks in the chromatogram obtained with the test solution are similar in retention time to those in the chromatogram obtained with the reference solution.

TESTS

Relative density (*2.2.5*): 0.885 to 0.906.

Refractive index (*2.2.6*): 1.475 to 1.482.

Optical rotation (*2.2.7*): + 5° to + 15°.

Chromatographic profile. Gas chromatography (*2.2.28*): use the normalisation procedure.

Test solution. Dissolve 0.15 mL of the substance to be examined in 10 mL of *hexane R*.

Reference solution. Dissolve 5 µL of *α-pinene R*, 5 µL of *sabinene R*, 15 µL of *α-terpinene R*, 5 µL of *limonene R*, 5 µL of *cineole R*, 30 µL of *γ-terpinene R*, 5 µL of *p-cymene R*, 5 µL of *terpinolene R*, 60 µL of *terpinen-4-ol R*, 5 µL of *aromadendrene R* and 5 mg of *α-terpineol R* in 10 mL of *hexane R*.

Column:

– *material*: fused silica,
– *size*: *l* = 30 m (a film thickness of 1 µm may be used) to 60 m (a film thickness of 0.2 µm may be used), Ø = 0.25-0.53 mm,
– *stationary phase*: *macrogol 20 000 R*.

Carrier gas: *helium for chromatography R*.

Flow rate: 1.3 mL/min.

Split ratio: 1:50.

Herbal drugs

Temperature:

	Time (min)	Temperature (°C)
Column	0 - 1	50
	1 - 37	50 → 230
	37 - 45	230
Injection port		240
Detector		240

Detection: flame ionisation.

Injection: 1 µL.

Elution order: order indicated in the composition of the reference solution. Record the retention times of these substances.

System suitability: reference solution:

- *resolution*: minimum 2.7 between the peaks due to terpinen-4-ol and aromadendrene.

Using the retention times determined from the chromatogram obtained with the reference solution, locate the components of the reference solution in the chromatogram obtained with the test solution. Disregard the peak due to hexane.

Determine the percentage content of these components. The percentages are within the following ranges:

- *α-pinene*: 1.0 per cent to 6.0 per cent,
- *sabinene*: maximum 3.5 per cent,
- *α-terpinene*: 5.0 per cent to 13.0 per cent,
- *limonene*: 0.5 per cent to 4.0 per cent,
- *cineole*: maximum 15.0 per cent,
- *γ-terpinene*: 10.0 per cent to 28.0 per cent,
- *p-cymene*: 0.5 per cent to 12.0 per cent,
- *terpinolene*: 1.5 per cent to 5.0 per cent,
- *terpinen-4-ol*: minimum 30.0 per cent,
- *aromadendrene*: maximum 7.0 per cent,
- *α-terpineol*: 1.5 per cent to 8.0 per cent.

STORAGE

At a temperature not exceeding 25 °C.

01/2012:2483

THOMSON KUDZUVINE ROOT

Puerariae thomsonii radix

DEFINITION

Whole or fragmented, dried root of *Pueraria thomsonii* Benth., with the outer bark removed.

Content: minimum 0.4 per cent of total isoflavonoids, expressed as puerarin ($C_{12}H_{20}O_9$; M_r 416.4) (dried drug), of which minimum 55 per cent consists of puerarin.

IDENTIFICATION

A. Cylindrical, subfusiform or semi-cylindrical, 12-15 cm long and 4-8 cm in diameter, sometimes in longitudinally or obliquely cut thick slices, varying in size. Externally yellowish-white or pale brown. The root is heavy, texture hard and starchy, a transverse section shows pale brown concentric rings formed by fibres, a longitudinal section shows several longitudinal striations formed by fibres.

B. Microscopic examination (*2.8.23*). The powder is yellowish-white. Examine under a microscope using *chloral hydrate solution R*. The powder shows the following diagnostic characters: thick-walled lignified fibres, which occur in groups, surrounded by a calcium oxalate prism sheath; crystal cells with thickened walls; rare sclereids, subrounded or elliptical, about 50 µm in diameter; relatively large bordered-pitted vessels with hexagonal or elliptical pits, arranged very densely. Examine under a microscope using a 50 per cent *V/V* solution of *glycerol R*. The powder shows numerous starch granules, simple or 2-20 compound; the starch granules are spheroidal, semi-rounded or polygonal with a pointed, cleft or stellate hilum, about 15 µm in diameter.

C. Thin-layer chromatography (*2.2.27*).

Test solution. Sonicate 0.5 g of the powdered herbal drug (355) (*2.9.12*) with 5 mL of *methanol R*, then centrifuge; use the supernatant.

Reference solution. Dissolve 5 mg of *daidzin R* and 5 mg of *puerarin R* in 5 mL of *methanol R*.

Plate: *TLC silica gel F_{254} plate R* (2-10 µm).

Mobile phase: *water R*, *methylene chloride R*, *methanol R*, *ethyl acetate R* (10:20:22:40 *V/V/V/V*); use the lower layer.

Application: 7 µL as bands of 8 mm.

Development: over a path of 6 cm.

Drying: in air.

Detection: examine in ultraviolet light at 254 nm.

Results: see below the sequence of zones present in the chromatograms obtained with the reference solution and the test solution. Furthermore, other zones may be present in the chromatogram obtained with the test solution.

Top of the plate	
	A weak quenching zone
Daidzin: a quenching zone	A weak quenching zone
Puerarin: a quenching zone	A weak quenching zone
	Several quenching zones
Reference solution	**Test solution**

TESTS

Foreign matter (*2.8.2*): maximum 5 per cent.

Loss on drying (*2.2.32*): maximum 10.0 per cent, determined on 1.000 g of the powdered herbal drug (355) (*2.9.12*) by drying in an oven at 105 °C.

Total ash (*2.4.16*): maximum 7.0 per cent.

Ash insoluble in hydrochloric acid (*2.8.1*): maximum 1.0 per cent.

ASSAY

Liquid chromatography (*2.2.29*).

Test solution. Introduce 1.00 g of the powdered herbal drug (355) (*2.9.12*) into a 250 mL conical flask, add 50.0 mL of *ethanol (30 per cent V/V) R* and weigh. Heat under a reflux condenser for 30 min. Allow to cool and weigh again. Adjust to the initial mass with *ethanol (30 per cent V/V) R*, mix well and filter.

Reference solution. Introduce an amount of *kudzuvine root dry extract HRS* corresponding to 3.0 mg of puerarin into a 250 mL conical flask, add 50.0 mL of *ethanol (30 per cent V/V) R* and weigh. Heat under a reflux condenser for 30 min. Allow to cool and weigh again. Adjust to the initial mass with *ethanol (30 per cent V/V) R*, mix well and filter.

Column: 2 columns coupled in series:

- *size*: *l* = 0.10 m, Ø = 4.6 mm;
- *stationary phase*: *monolithic octadecylsilyl silica gel for chromatography R*.

Mobile phase:

- *mobile phase A*: *glacial acetic acid R*, *water R* (0.1:99.9 *V/V*);
- *mobile phase B*: *acetonitrile R*;

Herbal drugs

Time (min)	Mobile phase A (per cent *V/V*)	Mobile phase B (per cent *V/V*)
0 - 16.5	90 → 71	10 → 29

Flow rate: 3.0 mL/min.

Detection: spectrophotometer at 260 nm.

Injection: 10 µL.

Identification of peaks: use the chromatogram supplied with *kudzuvine root dry extract HRS* and the chromatogram obtained with the reference solution to identify the peaks due to the isoflavonoids (puerarin, 3-methoxypuerarin, 6-*O*″-D-xylosylpuerarin and daidzin).

Relative retention with reference to puerarin (retention time = about 3.4 min): 6-*O*″-D-xylosylpuerarin = about 1.15; daidzin = about 1.4.

System suitability: reference solution:

- *peak-to-valley ratio*: minimum 10, where H_p = height above the baseline of the peak due to 3-methoxypuerarin and H_v = height above the baseline of the lowest point of the curve separating this peak from the peak due to puerarin.

Calculate the percentage content of puerarin using the following expression:

$$\frac{A_1 \times m_2 \times p}{A_2 \times m_1}$$

A_1 = area of the peak due to puerarin in the chromatogram obtained with the test solution;

A_2 = area of the peak due to puerarin in the chromatogram obtained with the reference solution;

m_1 = mass of the herbal drug to be examined used to prepare the test solution, in grams;

m_2 = mass of *kudzuvine root dry extract HRS* used to prepare the reference solution, in grams;

p = percentage content of puerarin in *kudzuvine root dry extract HRS*.

Calculate the percentage content of total isoflavonoids (puerarin, 6-*O*″-D-xylosylpuerarin and daidzin) using the following expression:

$$\frac{A_1 \times m_2 \times p}{A_2 \times m_1}$$

A_1 = sum of the areas of the peaks due to the isoflavonoids (puerarin, 6-*O*″-D-xylosylpuerarin and daidzin) in the chromatogram obtained with the test solution;

A_2 = area of the peak due to puerarin in the chromatogram obtained with the reference solution;

m_1 = mass of the herbal drug to be examined used to prepare the test solution, in grams;

m_2 = mass of *kudzuvine root dry extract HRS* used to prepare the reference solution, in grams;

p = percentage content of puerarin in *kudzuvine root dry extract HRS*.

04/2009:0865

THYME

Thymi herba

DEFINITION

Whole leaves and flowers separated from the previously dried stems of *Thymus vulgaris* L. or *Thymus zygis* L. or a mixture of both species.

Content:

- *essential oil*: minimum 12 mL/kg (anhydrous drug);
- *sum of the contents of thymol and carvacrol* (both $C_{10}H_{14}O$; M_r 150.2): minimum 40 per cent in the essential oil.

CHARACTERS

Strong aromatic odour reminiscent of thymol.

IDENTIFICATION

A. The leaf of *Thymus vulgaris* is usually 4-12 mm long and up to 3 mm wide, sessile or with a very short petiole. The lamina is tough, entire, lanceolate or ovate, covered on both surfaces by a grey or greenish-grey indumentum; the edges are markedly rolled up towards the abaxial surface. The midrib is depressed on the adaxial surface and is very prominent on the abaxial surface. The calyx is green, often with violet spots and is tubular; at the end are 2 lips of which the upper one is bent back and at the end has 3 lobes, the lower is longer and has 2 hairy teeth. After flowering, the calyx tube is closed by a crown of long, stiff hairs. The corolla, about twice as long as the calyx, is usually brownish in the dry state and is slightly bilabiate.

   The leaf of *Thymus zygis* is usually 1.7-6.5 mm long and 0.4-1.2 mm wide; it is acicular or linear-lanceolate and the edges are markedly rolled towards the abaxial surface. Both surfaces of the lamina are green or greenish-grey and the midrib is sometimes violet; the edges, in particular at the base, have long, white hairs. The dried flowers are very similar to those of *Thymus vulgaris*.

B. Reduce to a powder (355) (*2.9.12*). The powder of both species is greyish-green or greenish-brown. Examine under a microscope using *chloral hydrate solution R*. The epidermises of the leaves have cells with anticlinal walls which are sinuous and beaded and the stomata are diacytic (*2.8.3*); numerous secretory trichomes made up of 12 secretory cells, the cuticle of which is generally raised by the secretion to form a globular or ovoid bladder-like covering; the glandular trichomes have a unicellular stalk and a globular or ovoid head; the covering trichomes of the adaxial surface are common to both species; they have warty walls and are shaped as pointed teeth; the warty covering trichomes of the abaxial surface are of many types: unicellular, straight or slightly curved, and bicellular or tricellular, articulated and often elbow-shaped (*Thymus vulgaris*); bicellular or tricellular, more or less straight (*Thymus zygis*). Fragments of calyx are covered by numerous, uniseriate, articulated trichomes with 5-6 cells and with a weakly striated cuticle. Fragments of the corolla have numerous uniseriate covering trichomes, often collapsed, and secretory trichomes generally with 12 cells. Pollen grains are relatively rare, spherical and smooth with 6 germinal slit-like pores, measuring about 35 µm in diameter. The powder of *Thymus zygis* also contains numerous thick bundles of fibres from the main veins and from fragments of stems.

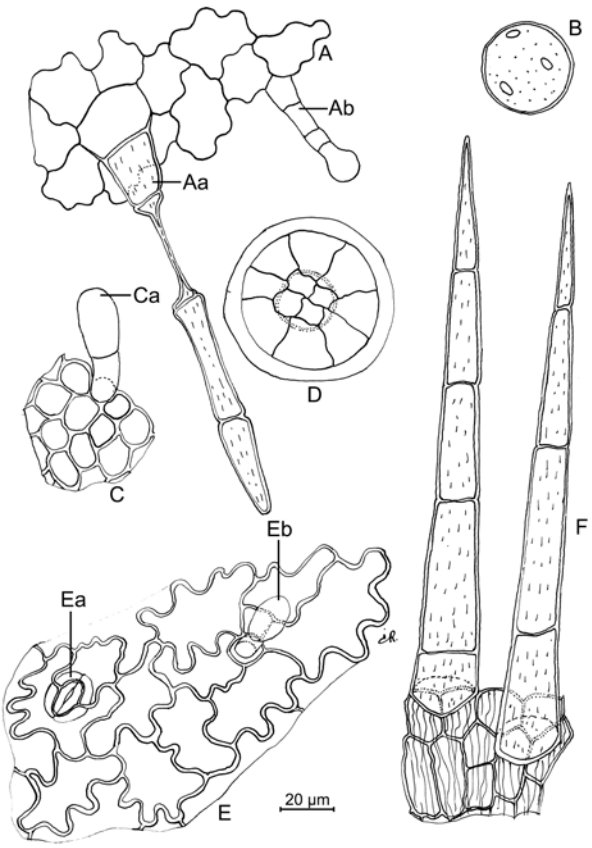

A. Epidermis of the outer surface of the corolla, in surface view, showing a covering trichome with one cell collapsed (Aa), and a unicellular-headed glandular trichomes (Ab)

B. Pollen grain with 6 germinal pores (of which only 3 are visible in the illustration)

C. Epidermis of the lower corolla with glandular trichome (Ca)

D. Secretory trichome with 12 cells

E. Outer epidermis of the upper corolla, in surface view, with diacytic stomata (Ea) and glandular trichome (Eb)

F. Epidermis of the calyx, in surface view, with covering trichomes

Figure 0865.-1. – *Illustration of powdered herbal drug of Thymus vulgaris* L. *(see Identification B)*

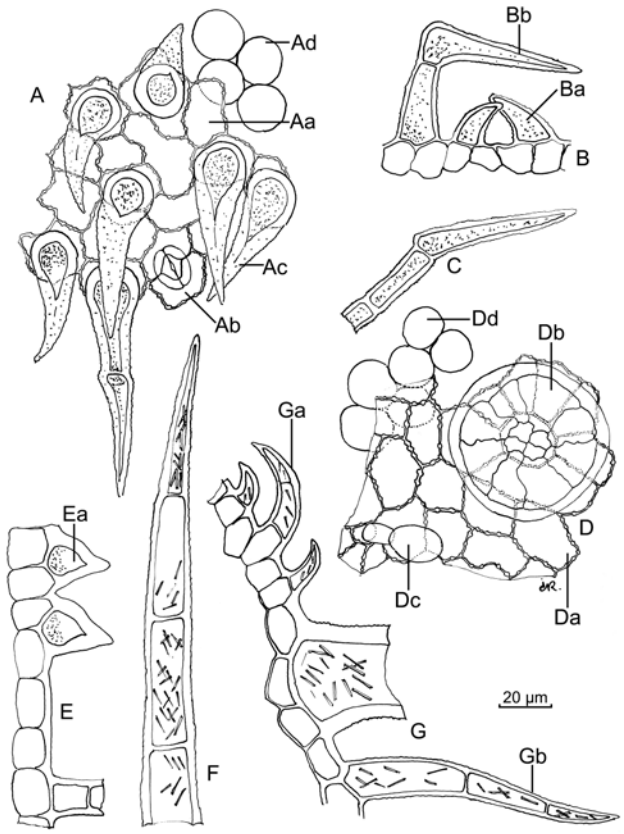

A. Upper epidermis, in surface view, with beaded cells (Aa), diacytic stomata (Ab) and covering trichomes with warty walls (Ac) and underlying palisade parenchyma (Ad)

B and E. Epidermis, in transverse section, with unicellular covering trichomes (Ba, Ea) and articulated bicellular covering trichome (Bb)

C. Articulated tricellular covering trichome

D. Upper epidermis, in surface view, with beaded cells (Da), secretory trichome made up of 12 secretory cells (Db), and glandular trichome with a unicellular head (Dc) and underlying palisade parenchyma (Dd)

F. Multicellular covering trichome from the base of the lamina (*T. zygis*)

G. Epidermis, in transverse section, with bicellular (Ga) and tricellular (Gb) covering trichomes (*T. zygis*)

Figure 0865.-2. – *Illustration of powdered herbal drug of Thymus zygis* L. *(see Identification B)*

C. Thin-layer chromatography (*2.2.27*).

Test solution. To 1.0 g of the powdered herbal drug (355) (*2.9.12*) add 5 mL of *methylene chloride R* and shake for 3 min, filter through about 2 g of *anhydrous sodium sulfate R*.

Reference solution. Dissolve 5 mg of *thymol R* and 10 µL of *carvacrol R* in 10 mL of *methylene chloride R*.

Plate: *TLC silica gel F_{254} plate R*.

Mobile phase: *methylene chloride R*.

Application: 20 µL as bands.

Development: over a path of 15 cm.

Drying: in air.

Detection A: examine in ultraviolet light at 254 nm.

Results A: see below the sequence of the zones present in the chromatograms obtained with the reference solution and the test solution.

Top of the plate	
———	———
	A prominent quenching zone
Thymol: a quenching zone	A quenching zone (thymol)
———	———
	Quenching zones
Reference solution	**Test solution**

Detection B: spray with *anisaldehyde solution R* using 10 mL for a plate 200 mm square and heat at 100-105 °C for 10 min.

Results B: see below the sequence of the zones present in the chromatograms obtained with the reference solution and the test solution. Furthermore, other zones are present in the lower third of the chromatogram obtained with the test solution. The intensity of the zones due to thymol and carvacrol depends upon the species examined.

Top of the plate	
———	———
Thymol: a brownish-pink zone Carvacrol: a pale violet zone	A brownish-pink zone (thymol) A pale violet zone (carvacrol)
———	———
	A greyish-pink zone A violet zone (cineole and linalol) A greyish-brown zone (borneol) A violet-blue zone An intense violet zone
Reference solution	**Test solution**

D. Examine the chromatograms obtained in the assay for thymol and carvacrol.

Results: the characteristic peaks in the chromatogram obtained with the test solution are similar in retention time to those in the chromatogram obtained with the reference solution.

TESTS

Foreign matter (*2.8.2*): maximum 10 per cent of stems and maximum 2 per cent of other foreign matter. Stems must not be more than 1 mm in diameter and 15 mm in length. Leaves with long trichomes at their base and with weakly pubescent other parts (*Thymus serpyllum* L.) are absent.

Water (*2.2.13*): maximum 100 mL/kg, determined on 20.0 g of the powdered herbal drug (355) (*2.9.12*).

Total ash (*2.4.16*): maximum 15.0 per cent.

Ash insoluble in hydrochloric acid (*2.8.1*): maximum 3.0 per cent.

ASSAY

Essential oil (*2.8.12*). Use 30.0 g of the drug, a 1000 mL round-bottomed flask and 400 mL of *water R* as the distillation liquid. Distil at a rate of 2-3 mL/min for 2 h without *xylene R* in the graduated tube.

Thymol and carvacrol. Gas chromatography (*2.2.28*): use the normalisation procedure.

Test solution. Filter the essential oil obtained in the determination of essential oil over a small amount of *anhydrous sodium sulfate R* and dilute to 5.0 mL with *hexane R* by rinsing the apparatus and the anhydrous sodium sulfate.

Reference solution. Dissolve 0.20 g of *thymol R* and 50 mg of *carvacrol R* in *hexane R* and dilute to 5.0 mL with the same solvent.

Column:

- *material*: fused silica;
- *size*: *l* = 30-60 m, Ø = 0.25 mm;
- *stationary phase*: *macrogol 20 000 R* (film thickness 0.25 µm).

Carrier gas: *nitrogen for chromatography R* or *helium for chromatography R*.

Flow rate: 1-2 mL/min.

Split ratio: 1:100.

Temperature:

	Time (min)	Temperature (°C)
Column	0 - 45	40 → 220
Injection port		190
Detector		210

Detection: flame ionisation.

Injection: 0.2 µL.

Elution order: order indicated in the composition of the reference solution. Record the retention times of these substances.

System suitability: reference solution:

- *resolution*: minimum 1.5 between the peaks due to thymol and carvacrol.

Using the retention times determined from the chromatogram obtained with the reference solution, locate the components of the reference solution in the chromatogram obtained with the test solution.

Determine the percentage content of thymol and carvacrol.

01/2012:1374

THYME OIL, THYMOL TYPE

Thymi typo thymolo aetheroleum

DEFINITION

Essential oil obtained by steam distillation from the fresh flowering aerial parts of *Thymus vulgaris* L., *T. zygis* L. or a mixture of both species.

CHARACTERS

Appearance: clear, yellow or very dark reddish-brown, mobile liquid.

Odour reminiscent of thymol.

Solubility: miscible with anhydrous ethanol and with light petroleum.

IDENTIFICATION

First identification: B.

Second identification: A.

A. Thin-layer chromatography (*2.2.27*).

Test solution. Dissolve 0.2 mL of the substance to be examined in *methylene chloride R* and dilute to 10 mL with the same solvent.

Reference solution. Dissolve 5 mg of *thymol R* and 10 µL of *carvacrol R* in *methylene chloride R* and dilute to 10 mL with the same solvent.

Plate: *TLC silica gel plate R* (5-40 µm) [or *TLC silica gel plate R* (2-10 µm)].

Mobile phase: *methylene chloride R*.

Application: 10 µL [or 4 µL] as bands of 10 mm [or 8 mm].

Development: over a path of 12 cm [or 6 cm].

Drying: in air.

Detection: treat with *anisaldehyde solution R* and heat at 100-105 °C for 5-10 min; examine in daylight.

Results: see below the sequence of zones present in the chromatograms obtained with the reference solution and the test solution. Furthermore, other faint zones may be present in the chromatogram obtained with the test solution.

Top of the plate	
	A pink zone
———	———
Thymol: an orange-brown zone	An intense orange-brown zone (thymol)
Carvacrol: an orange-grey zone	A faint orange-grey zone (carvacrol) may be present
———	———
	A pink zone
	A violet zone
	A brownish-grey zone
Reference solution	**Test solution**

Herbal drugs

B. Examine the chromatograms obtained in the test for chromatographic profile.

Results: the characteristic peaks in the chromatogram obtained with the test solution are similar in retention time to those in the chromatogram obtained with reference solution (a).

TESTS

Relative density (*2.2.5*): 0.915 to 0.935.

Refractive index (*2.2.6*): 1.490 to 1.505.

Chromatographic profile. Gas chromatography (*2.2.28*): use the normalisation procedure.

Test solution. Dissolve 200 µL of the substance to be examined in *heptane R* and dilute to 10.0 mL with the same solvent.

Reference solution (a). Dissolve 5 µL of *β-myrcene R*, 5 µL of *α-terpinene R*, 20 µL of *p-cymene R*, 10 µL of *γ-terpinene R*, 5 µL of *linalol R*, 5 µL of *terpinen-4-ol R*, 40 mg of *thymol R* and 5 µL of *carvacrol R* in 5 mL of *heptane R*.

Reference solution (b). Dissolve 10 µL of *carvacrol R* in *heptane R* and dilute to 10.0 mL with the same solvent. Dilute 100 µL of the solution to 10.0 mL with *heptane R*.

Column:

- *material*: fused silica;
- *size*: *l* = 60 m, Ø = 0.25 mm;
- *stationary phase*: *poly(dimethyl)(diphenyl)siloxane R* (film thickness 0.25 µm).

Carrier gas: *helium for chromatography R*.

Flow rate: 1.5 mL/min.

Split ratio: 1:50.

Temperature:

	Time (min)	Temperature (°C)
Column	0 - 75	65 → 215
Injection port		230
Detector		250

Detection: flame ionisation.

Injection: 1 µL.

Elution order: order indicated in the composition of reference solution (a); record the retention times of these substances.

System suitability: reference solution (a):

- *resolution*: minimum 1.5 between the peaks due to thymol and carvacrol.

Identification of peaks: using the retention times determined from the chromatogram obtained with reference solution (a), locate the components of reference solution (a) in the chromatogram obtained with the test solution. The peak due to α-thujene elutes with a relative retention of about 0.8 with reference to β-myrcene. The peak due to carvacrol methyl ether elutes with a relative retention of about 0.9 with reference to thymol.

Determine the percentage content of these components. The limits are within the following ranges:

- *α-thujene*: 0.2 per cent to 1.5 per cent;
- *β-myrcene*: 1.0 per cent to 3.0 per cent;
- *α-terpinene*: 0.9 per cent to 2.6 per cent;
- *p-cymene*: 14.0 per cent to 28.0 per cent;
- *γ-terpinene*: 4.0 per cent to 12.0 per cent;
- *linalol*: 1.5 per cent to 6.5 per cent;
- *terpinen-4-ol*: 0.1 per cent to 2.5 per cent;
- *carvacrol methyl ether*: 0.05 per cent to 1.5 per cent;
- *thymol*: 37.0 per cent to 55.0 per cent;
- *carvacrol*: 0.5 per cent to 5.5 per cent;
- *disregard limit*: the area of the principal peak in the chromatogram obtained with reference solution (b) (0.05 per cent).

STORAGE

At a temperature not exceeding 25 °C.

01/2008:1596

TOLU BALSAM

Balsamum tolutanum

DEFINITION

Oleo-resin obtained from the trunk of *Myroxylon balsamum* (L.) Harms var. *balsamum*.

Content: 25.0 per cent to 50.0 per cent of free or combined acids, expressed as cinnamic acid ($C_9H_8O_2$; M_r 148.2) (dried drug).

CHARACTERS

Appearance: hard, friable, brownish to reddish-brown mass; thin fragments are brownish-yellow when examined against the light.

Reminiscent odour of vanillin.

Solubility: practically insoluble in water, very soluble to freely soluble in alcohol, practically insoluble in light petroleum.

IDENTIFICATION

Thin-layer chromatography (*2.2.27*).

Test solution. Stir 0.40 g of the fragmented drug with 10 mL of *methylene chloride R* for 5 min and filter.

Reference solution. Dissolve 50 mg of *benzyl cinnamate R* in *methylene chloride R*, add 50 µL of *benzyl benzoate R* and dilute to 10 mL with *methylene chloride R*.

Plate: *TLC silica gel G plate R*.

Mobile phase: *light petroleum R*, *toluene R* (5:95 *V/V*).

Application: 20 µL, as bands.

Development: over a path of 15 cm.

Drying: in air.

Detection: spray with *vanillin reagent R* and heat at 100-105 °C for 5 min. Examine in daylight.

Results: see below the sequence of the zones present in the chromatograms obtained with the test and reference solutions. Furthermore, other coloured zones are present in the chromatogram obtained with the test solution.

Top of the plate	
Benzyl benzoate: a greyish-blue zone	a greyish-blue zone
Benzyl cinnamate: a greyish-green zone	a greyish-green zone
Reference solution	**Test solution**

TESTS

Acid value: 100 to 160.

Dissolve 0.5 g of the fragmented drug in 50 mL of *alcohol R*. Add 0.5 mL of *acid blue 93 solution R* and 5.0 mL of *0.5 M alcoholic potassium hydroxide*. Stir vigorously and titrate with *0.5 M hydrochloric acid* until the colour changes from brownish-red to blackish-green (n_1 mL of *0.5 M hydrochloric acid*). Carry out a blank test in the same manner (n_2 mL of *0.5 M hydrochloric acid*). Calculate the acid value in the same manner as the saponification value (*2.5.6*).

Matter insoluble in alcohol: maximum 5 per cent.

Boil 2.0 g of the fragmented drug with 25 mL of *alcohol (90 per cent V/V) R* and filter. Wash the residue with *alcohol (90 per cent V/V) R*, boiling until completely extracted, then dry the residue at 100-105 °C. Weigh the residue.

Loss on drying (*2.2.32*): maximum 5.0 per cent, determined on 2.000 g of the fragmented drug by spreading on a flat evaporating dish 9 cm in diameter and allowing to dry *in vacuo* for 4 h.

Total ash (*2.4.16*): maximum 0.3 per cent.

ASSAY

Boil 1.500 g under a reflux condenser with 25 mL of *0.5 M alcoholic potassium hydroxide* for 1 h. Evaporate the ethanol and heat the residue with 50 mL of *water R* until the substance is homogeneously distributed. After cooling, add 80 mL of *water R* and a solution of 1.5 g of *magnesium sulfate R* in 50 mL of *water R*. Mix, and allow to stand for 10 min. Filter through a pleated filter paper and wash the residue with 20 mL of *water R*. Combine the filtrate and the washings, acidify with *hydrochloric acid R* and extract with 4 quantities, each of 40 mL, of *ether R*. Discard the aqueous layer. Combine the organic extracts and wash with 2 quantities, each of 20 mL, and with 3 quantities, each of 10 mL, of a 50 g/L solution of *sodium hydrogen carbonate R*. Discard the ether layer. Combine the aqueous extracts, acidify with *hydrochloric acid R* and stir once with 30 mL, twice with 20 mL and once with 10 mL of *methylene chloride R*. Dry the combined methylene chloride extracts over *anhydrous sodium sulfate R*. Filter through a pleated filter and wash the residue with 10 mL of *methylene chloride R*. Reduce the combined methylene chloride extracts to 10 mL by distillation and eliminate the remaining methylene chloride in a current of air. Dissolve the residue with heating in 10 mL of *alcohol R* previously neutralised to *phenol red solution R*. After cooling, titrate with *0.1 M sodium hydroxide*, using the same indicator.

1 mL of *0.1 M sodium hydroxide* is equivalent to 14.82 mg of total acids, expressed as cinnamic acid.

STORAGE

Do not store in powdered form.

07/2010:1478

TORMENTIL

Tormentillae rhizoma

DEFINITION

Whole or cut, dried rhizome, freed from the roots, of *Potentilla erecta* (L.) Raeusch. (*P. tormentilla* Stokes).

Content: minimum 7 per cent of tannins, expressed as pyrogallol ($C_6H_6O_3$; M_r 126.1) (dried drug).

IDENTIFICATION

A. The rhizome is cylindrically spindle-shaped, with a very irregular appearance, often forming, twisted, knotty tubers, up to 10 cm long and 1-2 cm thick, very hard and scarcely branched. The surface is brown to reddish-brown, rugose and has remains of roots and transversely elongated depressed whitish scars from the stems. At the top of the rhizome the remains of numerous aerial stems may be present. The fracture is short and granular, dark red to brownish-yellow.

B. Reduce to a powder (355) (*2.9.12*). The powder is reddish-brown. Examine under a microscope using *chloral hydrate solution R*. The powder shows the following diagnostic characters: coarsely serrate cluster crystals of calcium oxalate, up to 60 µm in diameter; fragments of thin-walled parenchyma containing reddish-brown tannin; groups of narrow, bordered-pitted vessels with lateral pores; thick-walled and pitted, polygonal parenchyma; groups and fragments of sclerenchymatous thick-walled fibres; occasional fragments of cork with thin-walled, brown, tabular cells. Examine under a microscope using a 50 per cent *V/V* solution of *glycerol R*. The powder shows spherical or elliptical starch granules, up to about 20 µm in length.

C. Thin-layer chromatography (*2.2.27*).

Test solution. To 0.5 g of the powdered herbal drug (355) (*2.9.12*) add 10 mL of *water R*, shake for 10 min and filter. Shake the filtrate with 2 quantities, each of 10 mL, of *ethyl acetate R* and filter the combined upper phases over 6 g of *anhydrous sodium sulfate R*. Evaporate the filtrate to dryness under reduced pressure and dissolve the residue in 1.0 mL of *ethyl acetate R*.

Reference solution. Dissolve 1.0 mg of *catechin R* in 1.0 mL of *methanol R*.

Plate: *TLC silica gel plate R*.

Mobile phase: *glacial acetic acid R*, *ether R*, *hexane R*, *ethyl acetate R* (20:20:20:40 *V/V/V/V*).

Application: 10 µL as bands.

Development: over a path of 10 cm.

Drying: in air for 10-15 min.

Detection: spray with a freshly prepared 5 g/L solution of *fast blue B salt R*. Reddish zones appear. Expose the plate to ammonia vapour, the zones become more intense turning reddish-brown. Examine in daylight.

Results: see below the sequence of the zones present in the chromatograms obtained with the reference solution and the test solution. Furthermore, other fainter zones are present in the chromatogram obtained with the test solution.

Top of the plate	
Catechin: an intense reddish-brown zone	A more intense reddish-brown zone (catechin) A fainter zone An intense zone Fainter zones
Reference solution	**Test solution**

TESTS

Foreign matter (*2.8.2*): maximum 3 per cent of root and stems as well as rhizomes with black fracture and maximum 2 per cent of other foreign matter.

Cadmium (*2.4.27*): maximum 2.0 ppm.

Loss on drying (*2.2.32*): maximum 12.0 per cent, determined on 1.000 g of the powdered herbal drug (355) (*2.9.12*) by drying in an oven at 105 °C for 2 h.

Total ash (*2.4.16*): maximum 5.0 per cent.

ASSAY

Tannins (*2.8.14*). Use 0.500 g of the powdered herbal drug (180) (*2.9.12*).

01/2008:1895

TORMENTIL TINCTURE

Tormentillae tinctura

DEFINITION

Tincture produced from *Tormentil (1478)*.

Content: minimum 1.5 per cent *m/m* of tannins, expressed as pyrogallol ($C_6H_6O_3$; M_r 126.1).

Herbal drugs

PRODUCTION

The tincture is produced from 1 part of comminuted drug and 5 parts of ethanol (70 per cent *V/V*) by a suitable procedure.

CHARACTERS

Red or reddish-brown liquid.

IDENTIFICATION

Thin-layer chromatography (*2.2.27*).

Test solution. Mix 1.0 mL of the tincture to be examined with 1.0 mL of *alcohol (70 per cent V/V) R*.

Reference solution. Dissolve 1.0 mg of *catechin R* in 1.0 mL of *methanol R*.

Plate: *TLC silica gel plate R*.

Mobile phase: *ether R*, *glacial acetic acid R*, *hexane R*, *ethyl acetate R* (20:20:20:40 *V/V/V/V*).

Application: 10 µL as bands.

Development: over a path of 10 cm.

Drying: in air for 10-15 min.

Detection: spray with a freshly prepared 5 g/L solution of *fast blue B salt R*. Reddish zones appear. Expose the plate to ammonia vapour, the zones become more intense, turning reddish-brown. Examine in daylight.

Results: see below the sequence of the zones present in the chromatograms obtained with the reference solution and the test solution.

Top of the plate	
Catechin: an intense zone	An intense zone (catechin) A fainter zone An intense zone Fainter zones
Reference solution	**Test solution**

TESTS

Ethanol content (*2.9.10*): 64 per cent *V/V* to 69 per cent *V/V*.

Methanol and 2-propanol (*2.9.11*): maximum 0.05 per cent *V/V* of methanol and maximum 0.05 per cent *V/V* of 2-propanol.

ASSAY

Tannins (*2.8.14*). Use 2.50 g of the tincture to be examined.

01/2009:0532

TRAGACANTH

Tragacantha

[9000-65-1]

DEFINITION

Air-hardened, gummy exudate, flowing naturally or obtained by incision from the trunk and branches of *Astragalus gummifer* Labill. and certain other species of *Astragalus* from western Asia.

IDENTIFICATION

A. Tragacanth occurs in thin, flattened, ribbon-like, white or pale yellow, translucent strips, about 30 mm long and 10 mm wide and up to 1 mm thick, more or less curved, horny, with a short fracture; the surface is marked by fine longitudinal striae and concentric transverse ridges. It may also contain pieces similar in shape but somewhat thicker, more opaque and more difficult to fracture.

B. Reduce to a powder (355) (*2.9.12*). The powder is white or almost white and forms a mucilaginous gel with about 10 times its mass of *water R*. Examine under a microscope using a 50 per cent *V/V* solution of *glycerol R*. The powder shows in the gummy mass numerous stratified cellular membranes that turn slowly violet when treated with *iodinated zinc chloride solution R*. The gummy mass includes starch grains, isolated or in small groups, usually rounded in shape and sometimes deformed, with diameters varying between 4 µm and 10 µm, occasionally up to 20 µm, and a central hilum visible between crossed nicol prisms.

C. Examine the chromatograms obtained in the test for acacia.

Results: the chromatogram obtained with the test solution shows 3 zones due to galactose, arabinose and xylose. A faint yellowish zone at the solvent front and a greyish-green zone between the zones due to galactose and arabinose may be present.

D. Moisten 0.5 g of the powdered herbal drug (355) (*2.9.12*) with 1 mL of *ethanol (96 per cent) R* and add gradually, while shaking, 50 mL of *water R* until a homogeneous mucilage is obtained. To 5 mL of the mucilage add 5 mL of *water R* and 2 mL of *barium hydroxide solution R*. A slight flocculent precipitate is formed. Heat on a water-bath for 10 min. An intense yellow colour develops.

TESTS

Acacia. Thin-layer chromatography (*2.2.27*).

Test solution. To 100 mg of the powdered herbal drug (355) (*2.9.12*) in a thick-walled centrifuge test-tube, add 2 mL of a 100 g/L solution of *trifluoroacetic acid R*, shake vigorously to dissolve the forming gel, stopper the test-tube and heat the mixture at 120 °C for 1 h. Centrifuge the resulting hydrolysate, transfer the clear supernatant carefully into a 50 mL flask, add 10 mL of *water R* and evaporate the solution to dryness under reduced pressure. To the resulting clear film add 0.1 mL of *water R* and 0.9 mL of *methanol R*. Centrifuge to separate the amorphous precipitate, collect the supernatant and, if necessary, dilute to 1 mL with *methanol R*.

Reference solution. Dissolve 10 mg of *arabinose R*, 10 mg of *galactose R*, 10 mg of *rhamnose R* and 10 mg of *xylose R* in 1 mL of *water R* and dilute to 10 mL with *methanol R*.

Plate: *TLC silica gel plate R*.

Mobile phase: 16 g/L solution of *sodium dihydrogen phosphate R*, *butanol R*, *acetone R* (10:40:50 *V/V/V*).

Application: 10 µL as bands.

Development A: over a path of 10 cm.

Drying A: in a current of warm air for a few minutes.

Development B: over a path of 15 cm using the same mobile phase.

Drying B: at 110 °C for 10 min.

Detection: spray with *anisaldehyde solution R* and dry at 110 °C for 10 min.

Results: the chromatogram obtained with the reference solution shows 4 clearly separated coloured zones due to galactose (greyish-green or green), arabinose (yellowish-green), xylose (greenish-grey or yellowish-grey) and rhamnose (yellowish-green), in order of increasing R_F value; the chromatogram obtained with the test solution does not show a yellowish-green zone corresponding to the zone of rhamnose in the chromatogram obtained with the reference solution.

Methylcellulose. Examine the chromatograms obtained in the test for acacia.

Results: the chromatogram obtained with the test solution does not show a red zone near the solvent front.

Herbal drugs

Sterculia gum

A. Place 0.2 g of the powdered herbal drug (355) (*2.9.12*) in a 10 mL ground-glass-stoppered cylinder graduated in 0.1 mL. Add 10 mL of *ethanol (60 per cent V/V) R* and shake. Any gel formed occupies not more than 1.5 mL.

B. To 1.0 g of the powdered herbal drug (355) (*2.9.12*) add 100 mL of *water R* and shake. Add 0.1 mL of *methyl red solution R*. Not more than 5.0 mL of *0.01 M sodium hydroxide* is required to change the colour of the indicator.

Foreign matter: maximum 1.0 per cent.

Place 2.0 g of the powdered herbal drug (355) (*2.9.12*) in a 250 mL round-bottomed flask and add 95 mL of *methanol R*. Swirl to moisten the powder and add 60 mL of *hydrochloric acid R1*. Add a few glass beads about 4 mm in diameter and heat on a water-bath under a reflux condenser for 3 h, shaking occasionally. Remove the glass beads and filter the hot suspension *in vacuo* through a sintered-glass filter (160) (*2.1.2*). Rinse the flask with a small quantity of *water R* and pass the rinsings through the filter. Wash the residue on the filter with about 40 mL of *methanol R* and dry to constant mass at 110 °C (about 1 h). Allow to cool in a desiccator and weigh. The residue weighs a maximum of 20 mg.

Flow time: minimum 10 s, or minimum 50 s if the substance to be examined is to be used for the preparation of emulsions.

Place 1.0 g of the powdered herbal drug (125-250) (*2.9.12*) in a 1000 mL round-bottomed flask with a ground-glass stopper, add 8.0 mL of *ethanol (96 per cent) R* and close the flask. Disperse the suspension over the inner surface of the flask by shaking, taking care not to wet the stopper. Open the flask and add as a single portion 72.0 mL of *water R*. Stopper the flask and shake vigorously for 3 min. Allow to stand for 24 h and shake vigorously again for 3 min. Eliminate air bubbles by applying vacuum above the mucilage for 5 min. Transfer the mucilage to a 50 mL cylinder. Dip in the mucilage a piece of glass tubing 200 mm long and 6.0 mm in internal diameter and graduated at 20 mm and 120 mm from the lower end; the tubing must not be rinsed with surface-active substances. When the mucilage has reached the upper mark, close the tube with a finger. Withdraw the closed tube, remove the finger and measure with a stop-watch the time needed for the meniscus to reach the lower graduation. Carry out this operation 4 times and determine the average value of the last 3 determinations.

Total ash (*2.4.16*): maximum 4.0 per cent.

Microbial contamination

TAMC: acceptance criterion 10^4 CFU/g (*2.6.12*).

TYMC: acceptance criterion 10^2 CFU/g (*2.6.12*).

Absence of *Escherichia coli* (*2.6.13*).

Absence of *Salmonella* (*2.6.13*).

LABELLING

The label states whether or not the contents are suitable for preparing emulsions.

01/2008:1441

TURMERIC, JAVANESE

Curcumae xanthorrhizae rhizoma

DEFINITION

Dried rhizome, cut in slices, of *Curcuma xanthorrhiza* Roxb. (*C. xanthorrhiza* D. Dietrich).

Content:

– *essential oil*: minimum 50 mL/kg (anhydrous drug);

– *dicinnamoyl methane derivatives, expressed as curcumin* ($C_{21}H_{20}O_6$; M_r 368.4): minimum 1.0 per cent (anhydrous drug).

CHARACTERS

Aromatic odour.

IDENTIFICATION

A. Orange-yellow or yellowish-brown or greyish-brown slices, mostly peeled 1.5-6 mm thick and 15-50 mm, more rarely up to 70 mm, in diameter. Fragments of the brownish-grey cork are sporadically present. The transverse surface is yellow with dark spots in the paler centre. The fracture is short and finely grained.

B. Reduce to a powder (355) (*2.9.12*). The powder is reddish-brown. Examine under a microscope, using *chloral hydrate solution R*. The powder shows the following diagnostic characters: fragments of colourless parenchyma with orange-yellow or yellowish-brown secretory cells; fragments of reticulate and other vessels; rare fragments of cork and epidermis and fragments of thick-walled unicellular acute trichomes. Examine under a microscope using a 50 per cent *V/V* solution of *glycerol R*. The powder shows numerous stratified, ovoid or irregular starch granules, about 30-50 µm long and about 10-30 µm wide, with an eccentric hilum and marked, concentric striations.

C. Thin-layer chromatography (*2.2.27*) as described in the test for *Curcuma domestica* with the following modifications.

Detection: spray with a freshly prepared 0.4 g/L solution of *dichloroquinonechlorimide R* in *2-propanol R*. Expose to ammonia vapour until the zone due to thymol becomes bluish-violet.

Results: the chromatogram obtained with the reference solution shows almost in the middle a bluish-violet zone (thymol) and in the lower part a yellow zone (fluorescein). The chromatogram obtained with the test solution shows a blue zone (xanthorrhizol) slightly above the zone due to thymol in the chromatogram obtained with the reference solution and 2 yellowish-brown or brown zones (curcumin and demethoxycurcumin) between the zones due to thymol and fluorescein in the chromatogram obtained with the reference solution.

TESTS

Curcuma domestica. Thin-layer chromatography (*2.2.27*).

Test solution. Shake 0.5 g of the freshly powdered herbal drug (500) (*2.9.12*) with 5 mL of *methanol R* for 30 min and filter.

Reference solution. Dissolve 5 mg of *fluorescein R* and 10 mg of *thymol R* in 10 mL of *methanol R*.

Plate: *TLC silica gel plate R*.

Mobile phase: *glacial acetic acid R*, *toluene R* (20:80 *V/V*).

Application: 10 µL, as bands.

Development: over a path of 10 cm.

Drying: in air.

Detection: spray with a mixture of 1 volume of *sulfuric acid R* and 9 volumes of *acetic anhydride R*. Examine in ultraviolet light at 365 nm.

Results: in the chromatogram obtained with the test solution, no yellowish-red fluorescent zone (bisdemethoxycurcumin) appears slightly above the greenish-blue fluorescent zone due to fluorescein in the chromatogram obtained with the reference solution.

Water (*2.2.13*): maximum 120 mL/kg, determined on 20.0 g of the powdered herbal drug (500) (*2.9.12*).

Total ash (*2.4.16*): maximum 8.0 per cent.

ASSAY

Essential oil (*2.8.12*). Use a 500 mL round-bottomed flask, 200 mL of *water R* as the distillation liquid and 0.5 mL of *xylene R* in the graduated tube. Reduce the drug to a powder (500) (*2.9.12*) and immediately use 5.0 g for the determination. Distil at a rate of 3-4 mL/min for 3 h.

Dicinnamoyl methane derivatives. To 0.100 g of the powdered herbal drug (180) (*2.9.12*) add 60 mL of *glacial acetic acid R* and heat in a water-bath at 90 °C for 60 min. Add 2.0 g of *boric acid R* and 2.0 g of *oxalic acid R* and heat in a water-bath at 90 °C for 10 min. Allow to cool, dilute to 100.0 mL with *glacial acetic acid R* and shake. Dilute 5.0 mL of the clear supernatant to 50.0 mL with *glacial acetic acid R*. Measure the absorbance (*2.2.25*) at 530 nm, using *glacial acetic acid R* as the compensation liquid.

Calculate the percentage content of dicinnamoyl methane derivatives, expressed as curcumin, using the following expression:

$$\frac{A \times 0.426}{m}$$

i.e. taking the specific absorbance of curcumin to be 2350.

A = absorbance at 530 nm,

m = mass of the herbal drug to be examined, in grams.

04/2013:2543

TURMERIC RHIZOME

Curcumae longae rhizoma

DEFINITION

Whole, cured (by boiling or steaming), dried rhizome of *Curcuma longa* L. (syn. *C. domestica* Valeton) with roots and outer surface removed.

Content:

- *essential oil*: minimum 25 mL/kg (anhydrous drug);
- *dicinnamoyl methane derivatives, expressed as curcumin* ($C_{21}H_{20}O_6$; M_r 368.4): minimum 2.0 per cent (anhydrous drug).

CHARACTERS

Spicy odour.

IDENTIFICATION

A. The rhizome is ovate, oblong-ovoid, pyriform or cylindrical, often shortly branched, up to 6 cm long and 15 mm thick. The primary rhizome shows scars from the lateral branches. The surface is slightly dusty, spotted and brownish-yellow, yellow or brownish-grey, finely striated. The fracture is granular, smooth, non-fibrous, slightly glossy, uniformly orange-yellow; it shows a narrow cortex that is darker on the outside.

B. Microscopic examination (*2.8.23*). The powder is orange-yellow. Examine under a microscope using *chloral hydrate solution R*. The powder shows the following diagnostic characters: fragments of parenchyma sometimes coloured yellow by curcumin; reticulate or pitted vessels; rare fragments of brown cork; rare oil droplets. Examine under a microscope using a 50 per cent *V/V* solution of *glycerol R*. The powder shows starch granules, free or included in parenchymatous cells, usually gelatinised and agglomerated; rare ovoid starch granules, with a punctiform hilum in the narrow part, are also present.

C. Thin-layer chromatography (*2.2.27*).

Test solution. To 1 g of the freshly powdered herbal drug (355) (*2.9.12*) add 10 mL of *ethanol (96 per cent) R*, shake, allow to stand for 30 min with occasional shaking and filter; use the filtrate.

Reference solution. Dissolve 20 mg of *curcuminoids R* and 10 mg of *thymol R* in 10 mL of *ethanol (96 per cent) R*.

Plate: *TLC silica gel plate R* (5-40 µm) [or *TLC silica gel plate R* (2-10 µm)].

Mobile phase: *glacial acetic acid R*, *toluene R* (20:80 *V/V*).

Application: 10 µL [or 3 µL] as bands of 10 mm [or 8 mm].

Development: over a path of 10 cm [or 6 cm].

Drying: in air.

Detection A: examine in ultraviolet light at 365 nm.

Results A: see below the sequence of zones present in the chromatograms obtained with the reference solution and the test solution. Furthermore, other faint zones may be present in the chromatogram obtained with the test solution.

Top of the plate	
Curcuminoids: a greenish fluorescent zone	A greenish fluorescent zone (curcuminoids)
Curcuminoids: 2 greenish fluorescent zones	2 greenish fluorescent zones (curcuminoids)
Reference solution	**Test solution**

Detection B: treat with *anisaldehyde solution R* and heat at 100-105 °C for 10 min; examine in ultraviolet light at 365 nm.

Results B: see below the sequence of zones present in the chromatograms obtained with the reference solution and the test solution. Furthermore, other faint zones may be present in the chromatogram obtained with the test solution.

Top of the plate	
	A faint pink zone
	An intense reddish zone
Thymol: a dark zone	
	A pinkish-red zone
Curcuminoids: a brown zone	A brown zone (curcuminoids)
Curcuminoids: 2 yellow zones	2 yellow zones (curcuminoids)
Reference solution	**Test solution**

TESTS

***Curcuma zanthorrhiza* Roxb.** Examine the chromatogram obtained in Identification C, detection B.

Results B: the chromatogram obtained with the test solution shows no dark zone just above the zone due to thymol in the chromatogram obtained with the reference solution.

Water (*2.2.13*): maximum 120 mL/kg, determined on 15.0 g of the powdered herbal drug (500) (*2.9.12*).

Total ash (*2.4.16*): maximum 7.0 per cent.

ASSAY

Essential oil (*2.8.12*). Use 2.5 g of the freshly powdered herbal drug (500) (*2.9.12*), a 2 L round-bottomed flask, 400 mL of *water R* as the distillation liquid and 0.5 mL of *xylene R* in the graduated tube. Distil at a rate of 2 mL/min for 3 h.

Dicinnamoyl methane derivatives. Disperse 0.500 g of the powdered herbal drug (500) (*2.9.12*) in 30 mL of *ethanol (96 per cent) R* in a 100 mL round-bottomed flask. Heat under a reflux condenser for 2.5 h. Cool and filter into a volumetric flask, rinse the round-bottomed flask and the filter with *ethanol (96 per cent) R* and dilute to 100.0 mL with the same

solvent. Dilute 1.0 mL of the solution to 50.0 mL with *ethanol (96 per cent) R*. Measure the absorbance (*2.2.25*) at 425 nm using *ethanol (96 per cent) R* as the compensation liquid.

Calculate the percentage content of dicinnamoyl methane derivatives, expressed as curcumin, using the following expression:

$$\frac{A \times 5000}{1607 \times m}$$

i.e. taking the specific absorbance of curcumin to be 1607.

A = absorbance at 425 nm;

m = mass of the herbal drug to be examined, in grams.

01/2008:1627
corrected 7.0

TURPENTINE OIL, PINUS PINASTER TYPE

Terebinthinae aetheroleum e Pino pinastro

DEFINITION

Essential oil obtained by steam distillation, followed by rectification at a temperature below 180 °C, from the oleoresin obtained by tapping *Pinus pinaster* Aiton. A suitable antioxidant may be added.

CHARACTERS

Appearance: clear, colourless or pale yellow liquid.

Characteristic odour.

IDENTIFICATION

First identification: *B*.

Second identification: *A*.

A. Thin-layer chromatography (*2.2.27*).

Test solution. Mix 1 mL of the substance to be examined with *toluene R* and dilute to 10 mL with the same solvent.

Reference solution. Mix 10 µL of *β-pinene R* and 10 µL of *linalol R* with *toluene R* and dilute to 10 mL with the same solvent.

Plate: *TLC silica gel plate R*.

Mobile phase: *ethyl acetate R*, *toluene R* (5:95 *V/V*).

Application: 10 µL, as bands.

Development: over a path of 15 cm.

Drying: in air.

Detection: spray with *anisaldehyde solution R* and heat at 100-105 °C for 5-10 min. Examine in daylight.

Results: see below the sequence of the zones present in the chromatograms obtained with the reference solution and the test solution.

Top of the plate	
β-Pinene: a pink zone	A pink zone (β-pinene)
	A pink zone
Linalol: a pinkish-grey zone	
	3 faint violet zones
	A faint yellow zone
Reference solution	**Test solution**

B. Examine the chromatograms obtained in the test for chromatographic profile.

Results: the peaks in the chromatogram obtained with the test solution are similar in retention time to those in the chromatogram obtained with the reference solution.

TESTS

Relative density (*2.2.5*): 0.856 to 0.872.

Refractive index (*2.2.6*): 1.465 to 1.475.

Optical rotation (*2.2.7*): – 40° to – 28°.

Acid value (*2.5.1*): maximum 1.0.

Peroxide value (*2.5.5, Method B*): maximum 20.

Fatty oils and resinified essential oils (*2.8.7*). It complies with the test for fatty oils and resinified essential oils.

Chromatographic profile. Gas chromatography (*2.2.28*): use the normalisation procedure.

Test solution. The substance to be examined.

Reference solution (a). Dissolve 30 µL of *α-pinene R*, 10 mg of *camphene R*, 20 µL of *β-pinene R*, 10 µL of *car-3-ene R*, 10 µL of *β-myrcene R*, 20 µL of *limonene R*, 10 µL of *longifolene R*, 10 µL of *β-caryophyllene R* and 10 mg of *caryophyllene oxide R* in 1 mL of *hexane R*.

Reference solution (b). Dissolve 5 µL of *β-caryophyllene R* in *hexane R* and dilute to 1 mL with the same solvent. Dilute 0.1 mL to 1 mL with *hexane R*.

Column:

- *material*: fused silica;
- *size*: *l* = 60 m, Ø = 0.25 mm;
- *stationary phase*: *macrogol 20 000 R* (film thickness 0.25 µm).

Carrier gas: *helium for chromatography R*.

Flow rate: 1.0 mL/min.

Split ratio: 1:63.

Temperature:

	Time (min)	Temperature (°C)
Column	0 - 10	60
	10 - 80	60 → 200
	80 - 120	200
Injection port		200
Detector		250

Detection: flame ionisation.

Injection: 0.5 µL.

Elution order: order indicated in the composition of the reference solution (a); record the retention times of these substances.

System suitability:

- *resolution*: minimum 1.5 between the peaks due to car-3-ene and β-myrcene in the chromatogram obtained with reference solution (a).

Using the retention times determined from the chromatogram obtained with reference solution (a), locate the components of reference solution (a) in the chromatogram obtained with the test solution.

Determine the percentage content of these components. The limits are within the following ranges:

- *α-pinene*: 70.0 per cent to 85.0 per cent;
- *camphene*: 0.5 per cent to 1.5 per cent;
- *β-pinene*: 11.0 per cent to 20.0 per cent;
- *car-3-ene*: maximum 1.0 per cent;
- *β-myrcene*: 0.4 per cent to 1.5 per cent;
- *limonene*: 1.0 per cent to 7.0 per cent;
- *longifolene*: 0.2 per cent to 2.5 per cent;
- *β-caryophyllene*: 0.1 per cent to 3.0 per cent;
- *caryophyllene oxide*: maximum 1.0 per cent;

– *disregard limit*: area of the peak in the chromatogram obtained with reference solution (b) (0.05 per cent).

Residue on evaporation (*2.8.9*): maximum 2.5 per cent, determined after heating on a water-bath for 3 h.

STORAGE

At a temperature not exceeding 25 °C.

07/2010:2400

VALERIAN DRY AQUEOUS EXTRACT

Valerianae extractum aquosum siccum

DEFINITION

Extract produced from *Valerian root (0453)*.

Content: minimum 0.02 per cent of sesquiterpenic acids, expressed as valerenic acid ($C_{15}H_{22}O_2$; M_r 234.3) (dried extract).

PRODUCTION

The extract is produced from the herbal drug by a suitable procedure using water at not less than 60 °C.

CHARACTERS

Appearance: brown or brownish, hygroscopic powder.

IDENTIFICATION

Thin-layer chromatography (*2.2.27*).

Test solution. Suspend 1.0 g of the extract to be examined in 10 mL of *methanol R* and sonicate for 10 min. Filter the supernatant through a membrane filter (nominal pore size 0.45 µm). Use the filtrate as the test solution.

Reference solution. Dissolve 5 mg of *acetoxyvalerenic acid R* and 5 mg of *valerenic acid R* in 20 mL of *methanol R*.

Plate: *TLC silica gel plate R* (5-40 µm) [or *TLC silica gel plate R* (2-10 µm)].

Mobile phase: *glacial acetic acid R*, *ethyl acetate R*, *cyclohexane R* (2:38:60 *V/V/V*).

Application: 20 µL [or 5 µL] as bands of 10 mm [or 8 mm].

Development: over a path of 10 cm [or 6 cm].

Drying: in air.

Detection: spray with *anisaldehyde solution R* and heat at 100-105 °C for 5-10 min; examine in daylight.

Results: see below the sequence of zones present in the chromatograms obtained with the reference solution and the test solution. A faint violet zone due to valerenic acid may be present in the chromatogram obtained with the test solution. Furthermore, other zones may be present in the chromatogram obtained with the test solution.

Top of the plate	
Valerenic acid: a violet zone Acetoxyvalerenic acid: a violet zone	A violet zone (acetoxyvalerenic acid) A violet zone (hydroxyvalerenic acid)
Reference solution	**Test solution**

TESTS

Loss on drying (*2.8.17*): maximum 6.0 per cent.

ASSAY

Liquid chromatography (*2.2.29*).

Solvent mixture: *methanol R*, *water R* (50:50 *V/V*).

Test solution. In a 300 mL conical flask suspend 1.00 g of the extract to be examined in 40 mL of *water R* whilst swirling. Add 40 mL of *methanol R* and swirl for 1 h at 200 r/min. Filter the suspension into a volumetric flask and rinse the conical flask with 3 quantities, each of 5 mL, of the solvent mixture. Dilute to 100.0 mL with the solvent mixture.

Reference solution (a). Dissolve a quantity of *valerian dry extract HRS* corresponding to 1.0 mg of valerenic acid in *methanol R* and dilute to 10.0 mL with the same solvent. Sonicate for 10 min and filter through a membrane filter (nominal pore size 0.45 µm).

Reference solution (b). Dilute 1.0 mL of reference solution (a) to 50.0 mL with *methanol R*.

Column:

– *size*: *l* = 0.25 m, Ø = 4 mm;

– *stationary phase*: *octadecylsilyl silica gel for chromatography R* (5 µm).

Mobile phase:

– *mobile phase A*: *acetonitrile R1*, 5 g/L solution of *phosphoric acid R* (20:80 *V/V*);

– *mobile phase B*: 5 g/L solution of *phosphoric acid R*, *acetonitrile R1* (20:80 *V/V*);

Time (min)	Mobile phase A (per cent *V/V*)	Mobile phase B (per cent *V/V*)
0 - 5	55	45
5 - 18	55 → 20	45 → 80
18 - 22	20	80

Flow rate: 1.5 mL/min.

Detection: spectrophotometer at 220 nm.

Injection: 20 µL.

Identification of peaks: use the chromatogram supplied with *valerian dry extract HRS* and the chromatogram obtained with reference solution (a) to identify the peaks due to acetoxyvalerenic acid and hydroxyvalerenic acid.

Relative retention with reference to valerenic acid (retention time = about 19 min): hydroxyvalerenic acid = about 0.2; acetoxyvalerenic acid = about 0.5.

Calculate the percentage content of sesquiterpenic acids, expressed as valerenic acid, using the following expression:

$$\frac{(A_1 + A_2) \times m_2 \times p \times 0.2}{A_3 \times m_1}$$

A_1 = area of the peak due to hydroxyvalerenic acid in the chromatogram obtained with the test solution;

A_2 = area of the peak due to acetoxyvalerenic acid in the chromatogram obtained with the test solution;

A_3 = area of the peak due to valerenic acid in the chromatogram obtained with reference solution (b);

m_1 = mass of the extract to be examined used to prepare the test solution, in grams;

m_2 = mass of *valerian dry extract HRS* used to prepare reference solution (a), in grams;

p = percentage content of valerenic acid in *valerian dry extract HRS*.

Herbal drugs

04/2011:1898

VALERIAN DRY HYDROALCOHOLIC EXTRACT

Valerianae extractum hydroalcoholicum siccum

DEFINITION

Extract produced from *Valerian root (0453)*.

Content: minimum 0.25 per cent *m/m* of sesquiterpenic acids, expressed as valerenic acid ($C_{15}H_{22}O_2$; M_r 234.3) (dried extract).

PRODUCTION

The extract is produced from the herbal drug by a suitable procedure using ethanol (30-90 per cent *V/V*) or methanol (40-55 per cent *V/V*).

CHARACTERS

Appearance: brown, hygroscopic powder.

IDENTIFICATION

Thin-layer chromatography (*2.2.27*).

Test solution. Suspend 1 g of the extract to be examined in 10 mL of *methanol R* and sonicate for 10 min. Filter the supernatant through a membrane filter (nominal pore size 0.45 µm). Use the filtrate as the test solution.

Reference solution. Dissolve 5 mg of *acetoxyvalerenic acid R* and 5 mg of *valerenic acid R* in 20 mL of *methanol R*.

Plate: *TLC silica gel plate R* (5-40 µm) [or *TLC silica gel plate R* (2-10 µm)].

Mobile phase: *glacial acetic acid R*, *ethyl acetate R*, *cyclohexane R* (2:38:60 *V/V/V*).

Application: 20 µL [or 5 µL] as bands of 10 mm [or 8 mm].

Development: over a path of 10 cm [or 6 cm].

Drying: in air.

Detection: spray with *anisaldehyde solution R* and heat at 100-105 °C for 5-10 min; examine in daylight.

Results: see below the sequence of zones present in the chromatograms obtained with the reference solution and the test solution. Furthermore, other violet zones may be present in the chromatogram obtained with the test solution.

Top of the plate	
Valerenic acid: a violet zone	A violet zone (valerenic acid)
Acetoxyvalerenic acid: a violet zone	A violet zone (acetoxyvalerenic acid)
	2 faint or very faint violet zones
Reference solution	**Test solution**

TESTS

Loss on drying (*2.8.17*): maximum 6.0 per cent.

ASSAY

Liquid chromatography (*2.2.29*).

Test solution. Suspend 1.00 g of the extract to be examined in 50.0 mL of *methanol R1*, sonicate for 10 min and filter through a membrane filter (nominal pore size 0.45 µm).

Reference solution. Dissolve an amount of *valerian dry extract HRS* corresponding to 0.5 mg of valerenic acid in *methanol R1* and dilute to 10.0 mL with the same solvent. Sonicate for 10 min and filter through a membrane filter (nominal pore size 0.45 µm).

Column:

- *size*: *l* = 0.25 m, Ø = 4.6 mm;
- *stationary phase*: *octadecylsilyl silica gel for chromatography R* (5 µm).

Mobile phase:

- *mobile phase A*: *acetonitrile R1*, 5 g/L solution of *phosphoric acid R* (20:80 *V/V*);
- *mobile phase B*: 5 g/L solution of *phosphoric acid R*, *acetonitrile R1* (20:80 *V/V*);

Time (min)	Mobile phase A (per cent *V/V*)	Mobile phase B (per cent *V/V*)
0 - 5	55	45
5 - 18	55 → 20	45 → 80
18 - 22	20	80

Flow rate: 1.5 mL/min.

Detection: spectrophotometer at 220 nm.

Injection: 20 µL.

Identification of peaks: use the chromatogram supplied with *valerian dry extract HRS* and the chromatogram obtained with the reference solution to identify the peaks due to hydroxyvalerenic acid, acetoxyvalerenic acid and valerenic acid.

System suitability: reference solution:

- *relative retention* with reference to valerenic acid (retention time = about 19 min): hydroxyvalerenic acid = about 0.2; acetoxyvalerenic acid = about 0.5.

Calculate the percentage content of sesquiterpenic acids, expressed as valerenic acid, using the following expression:

$$\frac{(A_1 + A_2 + A_3) \times m_2 \times p \times 5}{A_4 \times m_1}$$

A_1 = area of the peak due to hydroxyvalerenic acid in the chromatogram obtained with the test solution;

A_2 = area of the peak due to acetoxyvalerenic acid in the chromatogram obtained with the test solution;

A_3 = area of the peak due to valerenic acid in the chromatogram obtained with the test solution;

A_4 = area of the peak due to valerenic acid in the chromatogram obtained with the reference solution;

m_1 = mass of the extract to be examined used to prepare the test solution, in grams;

m_2 = mass of *valerian dry extract HRS* used to prepare the reference solution, in grams;

p = percentage content of valerenic acid in *valerian dry extract HRS*.

07/2010:0453

VALERIAN ROOT

Valerianae radix

DEFINITION

Dried, whole or fragmented underground parts of *Valeriana officinalis* L. *s.l.*, including the rhizome surrounded by the roots and stolons.

Content:

- *essential oil*: minimum 4 mL/kg (dried drug);
- *sesquiterpenic acids*: minimum 0.17 per cent *m/m*, expressed as valerenic acid ($C_{15}H_{22}O_2$; M_r 234.3) (dried drug);

Herbal drugs

IDENTIFICATION

A. The rhizome is yellowish-grey or pale brownish-grey, obconical or cylindrical, up to about 50 mm long and 30 mm in diameter; the base is elongated or compressed, usually entirely covered by numerous roots. The apex usually exhibits a cup-shaped scar from the aerial parts; stem bases are rarely present. When cut longitudinally, the pith exhibits a central cavity transversed by septa. The roots are numerous, almost cylindrical, of the same colour as the rhizome, 1-3 mm in diameter and sometimes more than 100 mm long. A few filiform fragile secondary roots are present. The fracture is short. The stolons show prominent nodes separated by longitudinally striated internodes, each 20-50 mm long, with a fibrous fracture.

B. Reduce to a powder (355) (*2.9.12*). The powder is pale yellowish-grey or pale greyish-brown. Examine under a microscope using *chloral hydrate solution R*. The powder shows the following diagnostic characters: cells containing a pale brown resin or droplets of essential oil; groups of small, rectangular sclereids with thick walls and a narrow, channelled branched lumen; occasional groups of larger, thinner-walled sclereids from the stem bases; lignified, reticulately-thickened vessels, singly or in small groups; thin-walled, elongated cells of the piliferous layer, some with root hairs; occasional fragments of cork. Examine under a microscope using a 50 per cent *V/V* solution of *glycerol R*. The powder shows abundant starch granules, mainly compound with up to 4-6 components but frequently separated to form single granules, rounded or irregular and up to about 15 µm in diameter; most of the granules show a rather indistinct cleft or radiate hilum.

C. Thin-layer chromatography (*2.2.27*).

Test solution. Suspend 1 g of the powdered herbal drug (355) (*2.9.12*) in 10 mL of *methanol R* and sonicate for 10 min. Filter the supernatant through a membrane filter (nominal pore size 0.45 µm). Use the filtrate as the test solution.

Reference solution. Dissolve 5 mg of *acetoxyvalerenic acid R* and 5 mg of *valerenic acid R* in 20 mL of *methanol R*.

Plate: *TLC silica gel plate R* (5-40 µm) [or *TLC silica gel plate R* (2-10 µm)].

Mobile phase: *glacial acetic acid R*, *ethyl acetate R*, *cyclohexane R* (2:38:60 *V/V/V*).

Application: 20 µL [or 5 µL] as bands of 10 mm [or 8 mm].

Development: over a path of 10 cm [or 6 cm].

Drying: in air.

Detection: spray with *anisaldehyde solution R* and heat at 100-105 °C for 5-10 min; examine in daylight.

Results: see below the sequence of zones present in the chromatograms obtained with the reference solution and the test solution. Furthermore, other violet zones may be present in the chromatogram obtained with the test solution.

Top of the plate	
———	———
Valerenic acid: a violet zone	A violet zone (valerenic acid)
Acetoxyvalerenic acid: a violet zone	A violet zone (acetoxyvalerenic acid)
———	———
	2 faint or very faint violet zones
Reference solution	**Test solution**

TESTS

Foreign matter (*2.8.2*): maximum 5 per cent of stem bases and maximum 2 per cent of other foreign matter.

Loss on drying (*2.2.32*): maximum 12.0 per cent, determined on 1.000 g of well homogenised powdered herbal drug (355) (*2.9.12*) by drying in an oven at 105 °C for 2 h.

Total ash (*2.4.16*): maximum 12.0 per cent.

Ash insoluble in hydrochloric acid (*2.8.1*): maximum 5.0 per cent.

ASSAY

Essential oil (*2.8.12*). Use 40.0 g of freshly powdered herbal drug (500) (*2.9.12*), a 2000 mL flask, 500 mL of *water R* as the distillation liquid and 0.50 mL of *xylene R* in the graduated tube. Distil at a rate of 3-4 mL/min for 4 h.

Sesquiterpenic acids. Liquid chromatography (*2.2.29*).

Test solution. Place 1.50 g of the powdered herbal drug (710) (*2.9.12*) in a 100 mL round-bottomed flask with a ground-glass neck. Add 20 mL of *methanol R1*. Mix and heat on a water-bath under a reflux condenser for 30 min. Allow to cool and filter. Place the filter with the residue in the 100 mL round-bottomed flask. Add 20 mL of *methanol R1* and heat on a water-bath under the reflux condenser for 15 min. Allow to cool and filter. Combine the filtrates and dilute to 50.0 mL with *methanol R1*, rinsing the round-bottomed flask and the filter.

Reference solution. Dissolve an amount of *valerian dry extract HRS* corresponding to 1.0 mg of valerenic acid in *methanol R1* and dilute to 10.0 mL with the same solvent. Sonicate for 10 min and filter through a membrane filter (nominal pore size 0.45 µm).

Column:

- *size*: *l* = 0.25 m, Ø = 4.6 mm;
- *stationary phase*: *octadecylsilyl silica gel for chromatography R* (5 µm).

Mobile phase:

- *mobile phase A*: *acetonitrile R1*, 5 g/L solution of *phosphoric acid R* (20:80 *V/V*);
- *mobile phase B*: 5 g/L solution of *phosphoric acid R*, *acetonitrile R1* (20:80 *V/V*);

Time (min)	Mobile phase A (per cent *V/V*)	Mobile phase B (per cent *V/V*)
0 - 5	55	45
5 - 18	55 → 20	45 → 80
18 - 22	20	80

Flow rate: 1.5 mL/min.

Detection: spectrophotometer at 220 nm.

Injection: 20 µL.

Peak identification: use the chromatogram supplied with *valerian dry extract HRS* and the chromatogram obtained with the reference solution to identify the peaks due to acetoxyvalerenic acid and valerenic acid.

System suitability: reference solution:

- *relative retention* with reference to valerenic acid (retention time = about 19 min): acetoxyvalerenic acid = about 0.5.

Calculate the percentage content of sesquiterpenic acids, expressed as valerenic acid, using the following expression:

$$\frac{(A_1 + A_2) \times m_2 \times p \times 5}{A_3 \times m_1}$$

A_1 = area of the peak due to acetoxyvalerenic acid in the chromatogram obtained with the test solution;

A_2 = area of the peak due to valerenic acid in the chromatogram obtained with the test solution;

A_3 = area of the peak due to valerenic acid in the chromatogram obtained with the reference solution;

Herbal drugs

m_1 = mass of the herbal drug to be examined used to prepare the test solution, in grams;

m_2 = mass of *valerian dry extract HRS*, used to prepare the reference solution, in grams;

p = percentage content of valerenic acid in *valerian dry extract HRS*.

07/2010:2526

VALERIAN ROOT, CUT

Valerianae radix minutata

DEFINITION

Dried, cut underground parts of *Valeriana officinalis* L. *s.l.*, including the rhizome, roots and stolons.

It is produced from *Valerian root (0453)* for the purpose of being used in herbal teas.

Content:

- *essential oil*: minimum 3 mL/kg (dried drug);
- *sesquiterpenic acids*: minimum 0.10 per cent *m/m* expressed as valerenic acid ($C_{15}H_{22}O_2$; M_r 234.3) (dried drug).

IDENTIFICATION

A. Reduce to a powder (355) (*2.9.12*). The powder is pale yellowish-grey or pale greyish-brown. Examine under a microscope using *chloral hydrate solution R*. The powder shows the following diagnostic characters: cells containing a pale brown resin or droplets of essential oil; groups of small, rectangular sclereids with thick walls and a narrow, channelled branched lumen; occasional groups of larger, thin-walled sclereids from the stem bases; lignified, reticulately-thickened vessels, singly or in small groups; thin-walled, elongated cells of the piliferous layer, some with root hairs; occasional fragments of cork. Examine under a microscope using a 50 per cent *V/V* solution of *glycerol R*. The powder shows abundant starch granules, mainly compound with up to 4-6 components but frequently separated to form single granules, rounded or irregular and up to about 15 µm in diameter; most of the granules show a rather indistinct cleft or radiate hilum.

B. Thin-layer chromatography (*2.2.27*).

Test solution. Suspend 1 g of the powdered herbal drug (355) (*2.9.12*) in 10 mL of *methanol R* and sonicate for 10 min. Filter the supernatant through a membrane filter (nominal pore size 0.45 µm). Use the filtrate as the test solution.

Reference solution. Dissolve 5 mg of *acetoxyvalerenic acid R* and 5 mg of *valerenic acid R* in 20 mL of *methanol R*.

Plate: *TLC silica gel plate R* (5-40 µm) [or *TLC silica gel plate R* (2-10 µm)].

Mobile phase: *glacial acetic acid R*, *ethyl acetate R*, *cyclohexane R* (2:38:60 *V/V/V*).

Application: 20 µL [or 5 µL] as bands of 10 mm [or 8 mm].

Development: over a path of 10 cm [or 6 cm].

Drying: in air.

Detection: spray with *anisaldehyde solution R* and heat at 100-105 °C for 5-10 min; examine in daylight.

Results: see below the sequence of zones present in the chromatograms obtained with the reference solution and the test solution. Furthermore, other violet zones may be present in the chromatogram obtained with the test solution.

Top of the plate	
———	———
Valerenic acid: a violet zone	A violet zone (valerenic acid)
Acetoxyvalerenic acid: a violet zone	A violet zone (acetoxyvalerenic acid)
———	———
	2 faint or very faint violet zones
Reference solution	**Test solution**

TESTS

Foreign matter (*2.8.2*): maximum 5 per cent of stem bases and maximum 2 per cent of other foreign matter, determined on the herbal drug prior to cutting.

Loss on drying (*2.2.32*): maximum 12.0 per cent, determined on 1.000 g of well homogenised powdered herbal drug (355) (*2.9.12*) by drying in an oven at 105 °C for 2 h.

Total ash (*2.4.16*): maximum 12.0 per cent.

Ash insoluble in hydrochloric acid (*2.8.1*): maximum 5.0 per cent.

ASSAY

Essential oil (*2.8.12*). Use 40.0 g of freshly powdered herbal drug (500) (*2.9.12*), a 2000 mL flask, 500 mL of *water R* as the distillation liquid and 0.50 mL of *xylene R* in the graduated tube. Distil at a rate of 3-4 mL/min for 4 h.

Sesquiterpenic acids. Liquid chromatography (*2.2.29*).

Test solution. Place 1.50 g of the powdered herbal drug (710) (*2.9.12*) in a 100 mL round-bottomed flask with a ground-glass neck. Add 20 mL of *methanol R1*. Mix and heat on a water-bath under a reflux condenser for 30 min. Allow to cool and filter. Place the filter with the residue in the 100 mL round-bottomed flask. Add 20 mL of *methanol R1* and heat on a water-bath under the reflux condenser for 15 min. Allow to cool and filter. Combine the filtrates and dilute to 50.0 mL with *methanol R1*, rinsing the round-bottomed flask and the filter.

Reference solution. Dissolve an amount of *valerian dry extract HRS* corresponding to 1.0 mg of valerenic acid in *methanol R1* and dilute to 10.0 mL with the same solvent. Sonicate for 10 min and filter through a membrane filter (nominal pore size 0.45 µm).

Column:

- *size*: *l* = 0.25 m, Ø = 4.6 mm;
- *stationary phase*: *octadecylsilyl silica gel for chromatography R* (5 µm).

Mobile phase:

- *mobile phase A*: *acetonitrile R1*, 5 g/L solution of *phosphoric acid R* (20:80 *V/V*);
- *mobile phase B*: 5 g/L solution of *phosphoric acid R*, *acetonitrile R1* (20:80 *V/V*);

Time (min)	Mobile phase A (per cent *V/V*)	Mobile phase B (per cent *V/V*)
0 - 5	55	45
5 - 18	55 → 20	45 → 80
18 - 22	20	80

Flow rate: 1.5 mL/min.

Detection: spectrophotometer at 220 nm.

Injection: 20 µL.

Peak identification: use the chromatogram supplied with *valerian dry extract HRS* and the chromatogram obtained with the reference solution to identify the peaks due to acetoxyvalerenic acid and valerenic acid.

Herbal drugs

System suitability: reference solution:

- *relative retention* with reference to valerenic acid (retention time = about 19 min): acetoxyvalerenic acid = about 0.5.

Calculate the percentage content of sesquiterpenic acids, expressed as valerenic acid, using the following expression:

$$\frac{(A_1 + A_2) \times m_2 \times p \times 5}{A_3 \times m_1}$$

A_1 = area of the peak due to acetoxyvalerenic acid in the chromatogram obtained with the test solution;

A_2 = area of the peak due to valerenic acid in the chromatogram obtained with the test solution;

A_3 = area of the peak due to valerenic acid in the chromatogram obtained with the reference solution;

m_1 = mass of the herbal drug to be examined used to prepare the test solution, in grams;

m_2 = mass of *valerian dry extract HRS*, used to prepare the reference solution, in grams;

p = percentage content of valerenic acid in *valerian dry extract HRS*.

07/2010:1899

VALERIAN TINCTURE

Valerianae tinctura

DEFINITION

Tincture produced from *Valerian root (0453)*.

Content: minimum 0.015 per cent *m/m* of sesquiterpenic acids, expressed as valerenic acid ($C_{15}H_{22}O_2$; M_r 234.3).

PRODUCTION

The tincture is produced from 1 part of the drug and 5 parts of ethanol (60 to 80 per cent *V/V*) by an appropriate procedure.

CHARACTERS

Appearance: brown liquid.

IDENTIFICATION

Thin-layer chromatography (*2.2.27*).

Test solution. Dilute 5 mL of the tincture to be examined with 5 mL of *ethanol (70 per cent V/V) R*.

Reference solution. Dissolve 5 mg of *acetoxyvalerenic acid R* and 5 mg of *valerenic acid R* in 20 mL of *methanol R*.

Plate: *TLC silica gel plate R* (5-40 µm) [or *TLC silica gel plate R* (2-10 µm)].

Mobile phase: *glacial acetic acid R*, *ethyl acetate R*, *cyclohexane R* (2:38:60 *V/V/V*).

Application: 20 µL [or 5 µL] as bands of 10 mm [or 8 mm].

Development: over a path of 10 cm [or 6 cm].

Drying: in air.

Detection: spray with *anisaldehyde solution R* and heat at 100-105 °C for 5-10 min; examine in daylight.

Results: see below the sequence of zones present in the chromatograms obtained with the reference solution and the test solution. Furthermore, other violet zones may be present in the chromatogram obtained with the test solution.

Top of the plate	
———	———
Valerenic acid: a violet zone	A violet zone (valerenic acid)
Acetoxyvalerenic acid: a violet zone	A violet zone (acetoxyvalerenic acid)
———	———
	2 faint or very faint violet zones
Reference solution	**Test solution**

TESTS

Ethanol (*2.9.10*): 95 per cent to 105 per cent of the quantity stated on the label.

ASSAY

Liquid chromatography (*2.2.29*).

Test solution. Dilute 10.0 g of the tincture to be examined to 50.0 mL with *methanol R1*.

Reference solution. Dissolve an amount of *valerian dry extract HRS* corresponding to 1.0 mg of valerenic acid in *methanol R1* and dilute to 10.0 mL with the same solvent. Sonicate for 10 min and filter through a membrane filter (nominal pore size 0.45 µm).

Column:

- *size*: *l* = 0.25 m, Ø = 4.6 mm;
- *stationary phase*: *octadecylsilyl silica gel for chromatography R* (5 µm).

Mobile phase:

- *mobile phase A*: *acetonitrile R1*, 5 g/L solution of *phosphoric acid R* (20:80 *V/V*);
- *mobile phase B*: 5 g/L solution of *phosphoric acid R*, *acetonitrile R1* (20:80 *V/V*);

Time (min)	Mobile phase A (per cent *V/V*)	Mobile phase B (per cent *V/V*)
0 - 5	55	45
5 - 18	55 → 20	45 → 80
18 - 22	20	80

Flow rate: 1.5 mL/min.

Detection: spectrophotometer at 220 nm.

Injection: 20 µL.

Peak identification: use the chromatogram supplied with *valerian dry extract HRS* and the chromatogram obtained with the reference solution to identify the peaks due to acetoxyvalerenic acid and valerenic acid.

System suitability: reference solution:

- *relative retention* with reference to valerenic acid (retention time = about 19 min): acetoxyvalerenic acid = about 0.5.

Calculate the percentage content of sesquiterpenic acids, expressed as valerenic acid, using the following expression:

$$\frac{(A_1 + A_2) \times m_2 \times p \times 5}{A_3 \times m_1}$$

A_1 = area of the peak due to acetoxyvalerenic acid in the chromatogram obtained with the test solution;

A_2 = area of the peak due to valerenic acid in the chromatogram obtained with the test solution;

A_3 = area of the peak due to valerenic acid in the chromatogram obtained with the reference solution;

Herbal drugs

m_1 = mass of the tincture to be examined used to prepare the test solution, in grams;

m_2 = mass of *valerian dry extract HRS* used to prepare the reference solution, in grams;

p = percentage content of valerenic acid in *valerian dry extract HRS*.

07/2012:1854

VERBENA HERB

Verbenae herba

DEFINITION

Whole or fragmented, dried aerial parts of *Verbena officinalis* L. collected during flowering.

Content: minimum 1.5 per cent of verbenalin ($C_{17}H_{24}O_{10}$; M_r 388.4) (dried drug).

IDENTIFICATION

A. The stem is greenish-brown, quadrangular, longitudinally grooved and roughly hairy, especially on the angles. The larger leaves are petiolate and deeply pinnately lobed, with bluntly dentate margins, the smaller leaves are sessile, not lobed, with crenate or dentate margins; the surfaces are rough and covered with bristly hairs, particularly over the veins, which are prominent on the lower surface. The flowers are numerous, arranged in a slender spike in the axils of leaf-like bracts; the tubular calyx has 5 acutely pointed lobes with the pale pink or lilac corolla forming a tube about twice as long as the calyx.

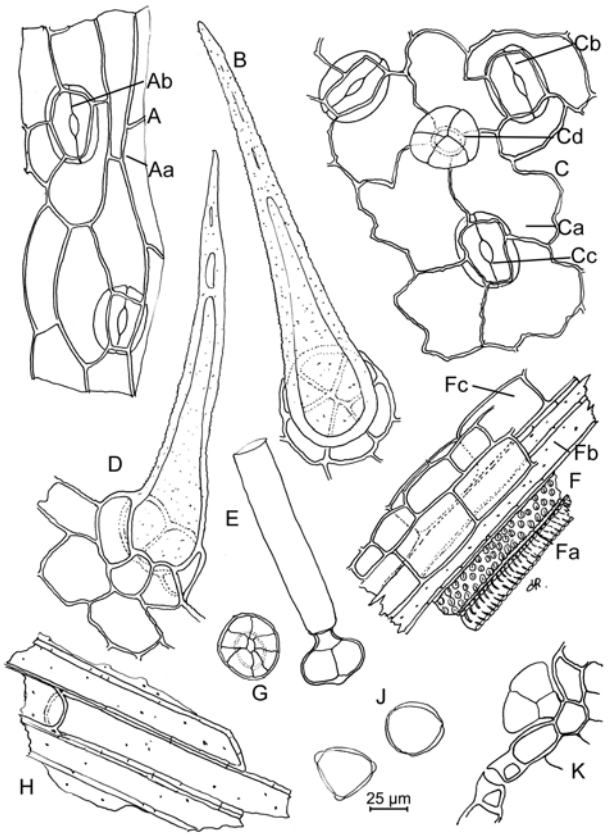

Figure 1854.-1. – *Illustration for identification test B of powdered herbal drug of verbena herb*

B. Microscopic examination (*2.8.23*). The powder is greenish-brown. Examine under a microscope using *chloral hydrate solution R*. The powder shows the following diagnostic characters (Figure 1854.-1): fragments of the leaves, which in surface view [C] show sinuous-walled epidermal cells [Ca] with anisocytic [Cb] or anomocytic [Cc] stomata (*2.8.3*), more numerous on the lower epidermis; fragments of stem epidermis [A] consisting of long, polygonal or rectangular epidermal cells [Aa] with thickened walls and stomata [Ab]; covering trichomes, unicellular, thick-walled, up to 500 µm long, wide at the base and arising from the centre of a single ring of domed, spherical epidermal cells, in surface view [B] or in side view [D]; occasional glandular trichomes of 2 types: (a) long stalk with a flattened head about 35 µm in diameter and consisting of 4-8 radiating cells in side view [E] or in surface view of the head [G], and (b) short unicellular stalk and an enlarged ovate head composed of 4 radiating cells in surface view [Cd] or in transverse section [K]; triangular-ovoid or rounded pollen grains about 30 µm in diameter, with 3 pores and a smooth exine [J]; many fragments of stems [F] consisting of groups of fibres [Fb], vessels [Fa] and fragments of parenchyma [Fc]; isolated fragments of fibres [H].

C. Examine the chromatograms obtained in test B for *Aloysia citrodora*.

Results: see below the sequence of zones present in the chromatograms obtained with the reference solution and the test solution. Furthermore, other zones may be present in the chromatogram obtained with the test solution.

Top of the plate	
———	———
	A brown or green zone
Arbutin: a blue or brown zone	
	An intense brownish-grey zone
Rutin: a dark brownish-yellow zone	
———	———
Reference solution	**Test solution**

TESTS

Aloysia citrodora

A. A lemon-like odour indicates the presence of *Aloysia citrodora*.

B. Thin-layer chromatography (*2.2.27*).

Test solution. To 0.5 g of the powdered herbal drug (710) (*2.9.12*) add 5 mL of *methanol R*. Heat in a water-bath at 60 °C for 10 min. Cool and filter.

Reference solution. Dissolve 10 mg of *arbutin R* and 10 mg of *rutin R* in *methanol R* and dilute to 10 mL with the same solvent.

Plate: *TLC silica gel plate R* (5-40 µm) [or *TLC silica gel plate R* (2-10 µm)].

Mobile phase: *anhydrous formic acid R*, *glacial acetic acid R*, *water R*, *ethyl acetate R* (11:11:27:100 *V/V/V/V*).

Application: 20 µL [or 5 µL] as bands of 10 mm [or 8 mm].

Development: over a path of 12 cm [or 6 cm].

Drying: in air.

Detection: spray with *anisaldehyde solution R* and heat at 100-105 °C for about 10 min; examine in daylight.

Results: the chromatogram obtained with the test solution shows no intense blue or violet zone approximately at the position of rutin in the chromatogram obtained with the reference solution.

Loss on drying (*2.2.32*): maximum 10.0 per cent, determined on 1.000 g of the powdered herbal drug (710) (*2.9.12*) by drying in an oven at 105 °C for 2 h.

Total ash (*2.4.16*): maximum 10.0 per cent.

Ash insoluble in hydrochloric acid (*2.8.1*): maximum 2.0 per cent.

ASSAY

Liquid chromatography (*2.2.29*).

Internal standard solution. Dissolve 10.0 mg of *ferulic acid R* in *ethanol (60 per cent V/V) R* and dilute to 100.0 mL with the same solvent.

Test solution. To 1.00 g of the powdered herbal drug (710) (*2.9.12*) add 50.0 mL of the internal standard solution and stir with a magnetic stirrer for 2 h. Centrifuge for 15 min and filter the supernatant using a membrane filter (nominal pore size 0.45 µm).

Reference solution. Dissolve the contents of a vial of *verbenalin CRS* in the internal standard solution and dilute to 5.0 mL with the same solution.

Precolumn:

- *size*: *l* = 0.01 m, Ø = 4.0 mm;
- *stationary phase*: *octadecylsilyl silica gel for chromatography R* (5 µm).

Column:

- *size*: *l* = 0.25 m, Ø = 4.0 mm;
- *stationary phase*: *octadecylsilyl silica gel for chromatography R* (5 µm);
- *temperature*: 20 °C.

Mobile phase:

- *mobile phase A*: 0.3 per cent *V/V* solution of *phosphoric acid R*;
- *mobile phase B*: *acetonitrile R*;

Time (min)	Mobile phase A (per cent *V/V*)	Mobile phase B (per cent *V/V*)
0 - 20	93 → 83	7 → 17
20 - 30	83	17
30 - 35	83 → 75	17 → 25

Flow rate: 1.0 mL/min.

Detection: spectrophotometer at 240 nm.

Injection: 20 µL.

System suitability: test solution:

- the chromatogram obtained is similar to the chromatogram shown in Figure 1854.-2;
- *resolution*: minimum 3.5 between the peaks due to ferulic acid and acteoside.

Calculate the percentage content of verbenalin using the following expression:

$$\frac{A_1 \times A_4 \times m_2 \times 1000}{A_2 \times A_3 \times m_1}$$

A_1 = area of the peak due to verbenalin in the chromatogram obtained with the test solution;

A_2 = area of the peak due to verbenalin in the chromatogram obtained with the reference solution;

A_3 = area of the peak due to ferulic acid in the chromatogram obtained with the test solution;

A_4 = area of the peak due to ferulic acid in the chromatogram obtained with the reference solution;

m_1 = mass of the herbal drug used to prepare the test solution, in grams;

m_2 = mass of verbenalin in the reference solution, in grams.

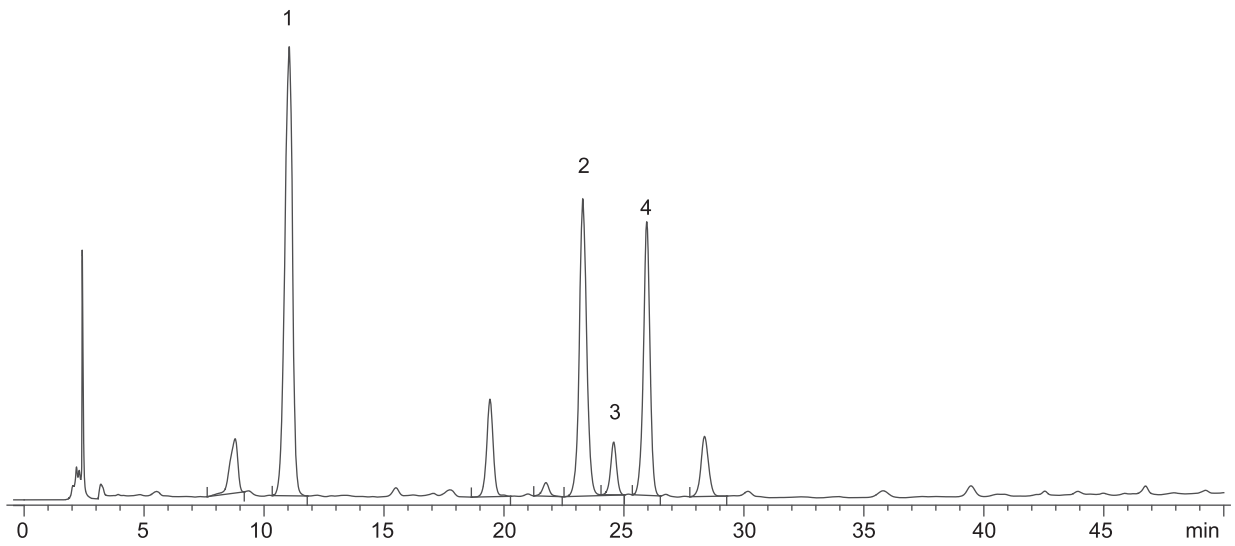

1. verbenalin 2. ferulic acid 3. unknown substance (may be absent) 4. acteoside

Figure 1854.-2. – *Chromatogram for the assay of verbena herb: test solution*

01/2008:1835
corrected 6.0

WHITE HOREHOUND

Marrubii herba

DEFINITION

Whole or fragmented dried flowering aerial parts of *Marrubium vulgare* L.

Content: minimum 0.7 per cent of marrubiin ($C_{20}H_{28}O_4$; M_r 332.4) (dried drug).

CHARACTERS

Bitter taste.

IDENTIFICATION

A. The stems are up to 50 cm long, quadrangular, up to 7 mm wide, young stems are densely covered with whitish downy hairs, older stems are greenish-grey and less hairy. The lower leaves are broadly ovate to almost orbicular, upper leaves less broadly ovate, both petiolate; lamina 1.5-4 cm long, 1-3.5 cm wide, apex sub-acute, base tapering or somewhat cordate, margin dentate to crenate, petiole up to 3 cm long; venation pinnate, prominent on the lower surface, distinctly depressed on the upper surface. Both leaf surfaces are densely covered with fine, white, woolly hairs, older leaves having fewer hairs on the dark greyish-green upper surface. The flowers are small, sessile in dense axillary clusters. The calyx is 5 mm long, persistent, with 5 long and 5 short, alternating, hooked, recurved fringing spines; throat of calyx with an internal ring of long silky hairs; corolla 7 mm long, dull white, 4-lobed, upper lobe 2-lipped, lower-lobe 3-lipped; 4 short stamens; style with bifid stigma.

B. Reduce to a powder (710) (*2.9.12*). The powder is greyish-green. Examine under a microscope under *chloral hydrate solution R*. The powder shows the following diagnostic characters: fragments of leaves with sinuous, polygonal epidermal cells, diacytic stomata (*2.8.3*), more numerous on the lower surface and cells of the mesophyll with small needles and cluster crystals of calcium oxalate; covering trichomes very numerous, twisted or coiled, 100-200 µm long, unicellular or multicellular and unseriate with 2-6 cells, enlarged at the joints; stellate trichomes of 2 types, one with 15-20 branches arising from a short unicellular stalk and the other with fewer branches arising from a sessile base; 8-celled secretory trichomes of lamiaceous type; glandular trichomes with 1 or 2 celled stalk and 1 to 4 celled head; the covering trichomes on the inner surface of the calyx are up to 1000 µm long with 2 to 3 cells, strongly thickened at the swollen joint and with the upper cell elongated; pollen grains spherical, about 25 µm in diameter with smooth exine; fragments of vascular tissue from the stems and veins.

C. Thin-layer chromatography (*2.2.27*).

Test solution (a). To 1.0 g of the powdered herbal drug (710) (*2.9.12*) add 2 mL of *dilute hydrochloric acid R* and 8 mL of *methanol R*. Heat under a reflux condenser for 30 min, cool and filter.

Test solution (b). To 1.0 g of the powdered herbal drug (710) (*2.9.12*) add 10 mL of *methanol R*. Heat under a reflux condenser for 30 min, cool and filter.

Reference solution. Dissolve 10 mg of *cholesterol R* and 10 mg of *guaiazulene R* in 10 mL of *methanol R*.

Plate: *TLC silica gel plate R* (5-40 µm) [or *TLC silica gel plate R* (2-10 µm)].

Mobile phase: *methanol R*, *toluene R* (5:95 *V/V*).

Application: 20 µL [or 5 µL] of test solutions (a) and (b) and 10 µL [or 2 µL] of the reference solution, as bands.

Development: over a path of 10 cm [or 6 cm].

Drying: in air.

Detection: spray with a 5 g/L solution of *vanillin R* in a mixture of 20 volumes of *ethanol (96 per cent) R* and 80 volumes of *sulfuric acid R* and examine in daylight immediately after heating at 130 °C for 5-10 min.

Results: see below the sequence of the zones present in the chromatograms obtained with the reference solution and test solutions (a) and (b). Further zones in the chromatograms obtained with test solutions (a) and (b) may be present. The zone due to marrubiin in the chromatogram obtained with test solution (a) is more intense than that in the chromatogram obtained with test solution (b). During extraction with hydrochloric acid and methanol, conversion of pre-marrubiin to marrubiin takes place which leads to an increase in intensity of the zone.

Top of the plate		
Guaiazulene: a reddish-violet zone	A bluish-violet zone	A bluish-violet zone
———		———
	A bluish-violet zone	A bluish-violet zone
———		———
Cholesterol: a bluish-violet zone	An intense bluish-violet zone (marrubiin)	A bluish-violet zone (marrubiin)
	A bluish-violet zone	A bluish-violet zone
	A bluish-violet zone	A bluish-violet zone
Reference solution	**Test solution (a)**	**Test solution (b)**

TESTS

Loss on drying (*2.2.32*): maximum 10.0 per cent, determined on 1.000 g of the powdered herbal drug (710) (*2.9.12*) by drying in an oven at 105 °C for 2 h.

Total ash (*2.4.16*): maximum 15.0 per cent.

Ash insoluble in hydrochloric acid (*2.8.1*): maximum 3.0 per cent.

ASSAY

Liquid chromatography (*2.2.29*).

Test solution. Reduce 50 g of the drug to a powder (250) (*2.9.12*) and homogenise. To 1.00 g of the powdered herbal drug in a 50 mL round-bottomed flask add 15 mL of a mixture of 2 volumes of *dilute hydrochloric acid R* and 8 volumes of *methanol R*. Heat in a water bath at 80 °C under a reflux condenser for 30 min. Allow to cool at room temperature and filter through a plug of adsorbent cotton into a 25 mL volumetric flask. Dilute to 25.0 mL with *methanol R* by rinsing the round-bottomed flask and the filter.

Reference solution. Dissolve 2.0 mg of *marrubiin R* in 10.0 mL of *methanol R*.

Column:

- *size*: *l* = 0.25 m, Ø = 4 mm,
- *stationary phase*: *end-capped octadecylsilyl silica gel for chromatography R* (5 µm).

Mobile phase:

- *mobile phase A*: *acetonitrile R*,
- *mobile phase B*: dilute 0.5 mL of *phosphoric acid R* to 1000 mL with *water R*,

Time (min)	Mobile phase A (per cent *V/V*)	Mobile phase B (per cent *V/V*)
0 → 15	40 → 90	60 → 10
15 → 20	90 → 40	10 → 60
20 → 25	40	60

Flow rate: 1.5 mL/min.

Detection: spectrophotometer at 217 nm.

Injection: 20 µL.

Herbal drugs

Locate the peak due to marrubiin by comparison with the chromatogram obtained with the reference solution.

Calculate the percentage content of marrubiin from the following expression:

$$\frac{A_1 \times m_2 \times p \times 2.5}{A_2 \times m_1}$$

A_1 = area of the peak due to marrubiin in the chromatogram obtained with the test solution,

A_2 = area of the peak due to marrubiin in the chromatogram obtained with the reference solution,

m_1 = mass of the herbal drug to be examined, in milligrams,

m_2 = mass of *marrubiin R*, in milligrams,

p = percentage content of marrubiin in *marrubiin R*.

01/2008:1855
corrected 6.0

WILD PANSY (FLOWERING AERIAL PARTS)

Violae herba cum flore

DEFINITION

Dried flowering aerial parts of *Viola arvensis* Murray and/or *Viola tricolor* L.

Content: minimum 1.5 per cent of flavonoids, expressed as violanthin ($C_{27}H_{30}O_{14}$; M_r 578.5) (dried drug).

IDENTIFICATION

A. The stem is angular and hollow. The leaves are oval, petiolate, with a cordate base or elongated and obtuse, with lyrate stipules, divided in the middle. The flowers, with a long peduncle, are zygomorphic, with 5 oval, lanceolate sepals, an appendage pointed outwards and 5 petals of which the lower one bears a spur; in *Viola arvensis*, the petals are shorter than the calyx, the lower petal is cream coloured, with black lines, the 4 upper petals may be cream coloured or violet blue; in *Viola tricolor*, the petals are longer than the calyx and violet coloured, more or less tinged with yellow. The androecium consisting of 5 stamens bears at the apex a membranous connective appendage with 2 spurs. The trilocular ovary shows a short style and globular stigmata. The fruit are navicular capsules, three-lobed, yellowish brown, 5 mm to 10 mm long. The pale yellow, pyriform seeds are about 1 mm long, bearing a caruncle.

B. Reduce to a powder (355) (*2.9.12*). The powder is greenish. Examine under a microscope using *chloral hydrate solution R*. The powder shows the following diagnostic characters: fragments of the epidermis of the leaves in surface view with wavy-walled cells and anomocytic stomata (*2.8.3*); conical unicellular covering trichomes, widened at the base and sharply pointed at the apex, with a striated cuticle; glandular trichomes with a multicellular head, and a short, multicellular stalk in the indentations of the leaf margins; cluster crystals of calcium oxalate, sometimes included in parenchyma; fragments of the corolla with wavy-walled epidermal cells, those from the mid-region papillose and with some extended to form flask or bottle-shaped projections, those from the base of the petals with covering trichomes up to about 300 µm long with characteristic hump-like swellings along their length; spherical or polyhedral pollen grains, 60 µm to 80 µm in diameter, with finely pitted exines and 5 pores (*Viola arvensis*) or 4 pores (*Viola tricolor*); occasional fragments of spiral and reticulate vessels and groups of fibres from the stem.

C. Thin-layer chromatography (*2.2.27*).

Test solution. Heat in a water-bath at 65 °C for 5 min, with frequent stirring, 2.0 g of the powdered herbal drug (355) (*2.9.12*) in 10 mL of *alcohol (70 per cent V/V) R*. Cool and filter.

Reference solution. Dissolve 2.5 mg of *rutin R*, 2.5 mg of *hyperoside R* and 1.0 mg of *caffeic acid R* in *methanol R* and dilute to 10 mL with the same solvent.

Plate: *TLC silica gel plate R*.

Mobile phase: *anhydrous formic acid R*, *acetic acid R*, *water R*, *ethyl acetate R* (11:11:27:100 *V/V/V/V*).

Application: 10 µL, as bands.

Development: over a path of 12 cm.

Drying: at 100-105 °C.

Detection: spray with a solution containing 10 g/L of *diphenylboric acid aminoethyl ester R* and 50 g/L of *macrogol 400 R* in *methanol R*. Allow the plate to dry in air for 30 min. Examine in ultraviolet light at 365 nm.

Results: see below the sequence of the zones present in the chromatograms obtained with the reference solution and the test solution. Furthermore, other zones may be present in the chromatogram obtained with the test solution.

Top of the plate	
Caffeic acid: a greenish-blue to light blue fluorescent zone	A blue fluorescent zone
Hyperoside: a yellowish-brown fluorescent zone	A yellowish-green fluorescent zone
Rutin: a yellowish-brown fluorescent zone	An intense yellowish-brown fluorescent zone (rutin) A yellowish-green fluorescent zone A yellowish-green fluorescent zone A yellowish-green fluorescent zone
Reference solution	**Test solution**

TESTS

Foreign matter (*2.8.2*): maximum 3 per cent.

Swelling index (*2.8.4*): minimum 9, determined on the powdered herbal drug (355) (*2.9.12*).

Loss on drying (*2.2.32*): maximum 12.0 per cent, determined on 1.000 g of the powdered herbal drug (355) (*2.9.12*) by drying in an oven at 105 °C for 2 h.

Total ash (*2.4.16*): maximum 15.0 per cent.

ASSAY

Stock solution. In a 200 mL flask, introduce 0.300 g of the powdered herbal drug (250) (*2.9.12*) and 40 mL of *alcohol (60 per cent V/V) R*. Heat in a water-bath at 60 °C for 10 min, shaking frequently. Allow to cool and filter through a plug of absorbent cotton into a 100 mL volumetric flask. Transfer the absorbent cotton with the drug residue back into the 200 mL flask, add 40 mL of *alcohol (60 per cent V/V) R* and heat again

in a water-bath at 60 °C for 10 min, shaking frequently. Allow to cool and filter into the same 100 mL volumetric flask as used previously. Rinse the 200 mL flask with a further quantity of *alcohol (60 per cent V/V) R*, filter and transfer to the same 100 mL volumetric flask. Dilute to volume with *alcohol (60 per cent V/V) R* and filter.

Test solution. Introduce 5.0 mL of the stock solution into a round-bottomed flask and evaporate to dryness under reduced pressure. Take up the residue with 8 mL of a mixture of 10 volumes of *methanol R* and 100 volumes of *glacial acetic acid R* and transfer into a 25 mL volumetric flask. Rinse the round-bottomed flask with 3 mL of a mixture of 10 volumes of *methanol R* and 100 volumes of *glacial acetic acid R* and transfer into the same 25 mL volumetric flask as used previously. Add 10.0 mL of a solution containing 25.0 g/L of *boric acid R* and 20.0 g/L of *oxalic acid R* in *anhydrous formic acid R* and dilute to 25.0 mL with *anhydrous acetic acid R*.

Compensation liquid. Introduce 5.0 mL of the stock solution into a round-bottomed flask and evaporate to dryness under reduced pressure. Take up the residue with 8 mL of a mixture of 10 volumes of *methanol R* and 100 volumes of *glacial acetic acid R* and transfer into a 25 mL volumetric flask. Rinse the round-bottomed flask with 3 mL of a mixture of 10 volumes of *methanol R* and 100 volumes of *glacial acetic acid R* and transfer into the same 25 mL volumetric flask as used previously. Add 10.0 mL of *anhydrous formic acid R* and dilute to 25.0 mL with *anhydrous acetic acid R*.

Measure the absorbance (*2.2.25*) of the test solution at 405 nm after 30 min.

Calculate the percentage content of total flavonoids, expressed as violanthin from the expression:

$$\frac{A \times 1.25}{m}$$

taking the specific absorbance of violanthin to be 400.

A = measured absorbance at 405 nm,

m = mass of the herbal drug to be examined, in grams.

01/2008:1891
corrected 6.0

WILD THYME

Serpylli herba

DEFINITION

Whole or cut, dried, flowering aerial parts of *Thymus serpyllum* L.s.l.

Content: minimum 3.0 mL/kg of essential oil (dried drug).

IDENTIFICATION

A. The stem is much branched, up to about 1.5 mm in diameter, cylindrical or indistinctly quadrangular, green, reddish or purplish, the older stems brown and woody, the younger stems pubescent. The leaves are opposite, 3 mm to 12 mm long and up to 4 mm wide, elliptical to ovate-lanceolate with an obtuse apex, cuneate and shortly petiolate at the base; the margin is entire and markedly ciliate, especially near the base; both surfaces are more or less glabrous but distinctly punctate. The inflorescence is composed of about 6 to 12 flowers in rounded to ovoid, terminal heads. The calyx is tubular, two-lipped with the upper lip dividing to form 3 teeth, the lower lip with 2 teeth, edged with long hairs; inner surfaces strongly pubescent, the hairs forming a closed tube after flowering. The corolla is purplish-violet to red, two-lipped, the lower lip with 3 lobes, upper lip notched, inner surface strongly pubescent; stamens 4, epipetalous, projecting from the corolla tube.

B. Reduce to a powder (355) (*2.9.12*). The powder is greyish-green to brownish-green. Examine under a microscope using *chloral hydrate solution R*. The powder shows the following diagnostic characters: fragments of the leaf epidermises with sinuous, slightly thickened anticlinical walls and stomata of the diacytic type (*2.8.3*); numerous covering trichomes on both epidermises and along the leaf margins, the majority short, conical, unicellular, with thickened and warty walls, fewer long, uniseriate, composed of up to 8 cells, slightly swollen at the joints, with moderately thickened walls; abundant glandular trichomes, mostly multicellular with a small, rounded, unicellular stalk and a large globular head composed of a number of indistinct, radiating cells containing brown secretion, others smaller, capitate, with unicellular stalk and a unicellular, globoid or ovoid head; purplish-violet fragments of the corolla, the outer epidermis with numerous covering and glandular trichomes, inner epidermis papillose; pollen grains spherical to elliptical, 30 µm to 40 µm in diameter, with a finely grained exine and 6 germinal pores.

C. Thin-layer chromatography (*2.2.27*).

Test solution. To 1.0 g of the powdered herbal drug (355) (*2.9.12*) add 5 mL of *methylene chloride R* and shake for 3 min. Filter through about 2 g of *anhydrous sodium sulfate R*.

Reference solution. Dissolve 5 mg of *thymol R* and 10 µL of *carvacrol R* in 10 mL of *methylene chloride R*.

Plate: *TLC silica gel F_{254} plate R*.

Mobile phase: *methylene chloride R*.

Application: 20 µL, as bands.

Development: over a path of 15 cm.

Drying: in air.

Detection A: examine in ultraviolet light at 254 nm.

Results A: see below the sequence of the zones present in the chromatograms obtained with the reference solution and the test solution.

Top of the plate	
———	———
	A prominent quenching zone
Thymol: a quenching zone	A quenching zone (thymol)
———	———
	Quenching zones
Reference solution	**Test solution**

Detection B: spray with *anisaldehyde solution R* using 10 mL for a plate 200 mm square and heat at 100-105 °C for 10 min.

Results B: see below the sequence of the zones present in the chromatograms obtained with the reference solution and the test solution. Furthermore, other zones are present in the lower third of the chromatogram obtained with the test solution. The intensity of the zones due to thymol and carvacrol depends upon the sample examined (chemotypes).

Top of the plate	
———	———
Thymol: a brownish-pink zone	A brownish-pink zone (thymol)
Carvacrol: a pale violet zone	A pale violet zone (carvacrol)
———	———
Reference solution	**Test solution**

Herbal drugs

TESTS

Foreign matter (*2.8.2*): maximum 3 per cent, determined on 30 g.

Foreign matter may also consist of acicular to linear-lanceolate leaves with a strongly bent margin, the adaxial surface showing covering trichomes shaped as pointed teeth with warty walls, the abaxial surface showing many types of warty covering trichomes: unicellular, straight or slightly curved, bicellular or tricellular, often elbow-shaped, and bicellular or tricellular, more or less straight (*Thymus vulgaris, Thymus zygis*).

Loss on drying (*2.2.32*): maximum 10.0 per cent, determined on 1.000 g of the powdered herbal drug (355) (*2.9.12*) by drying in an oven at 105 °C for 2 h.

Total ash (*2.4.16*): maximum 10.0 per cent.

Ash insoluble in hydrochloric acid (*2.8.1*): maximum 3.0 per cent.

ASSAY

Essential oil (*2.8.12*). Use 50.0 g of the cut drug, a 1000 mL round-bottomed flask and 500 mL of *water R* as the distillation liquid. Distil at a rate of 2-3 mL/min for 2 h without *xylene R* in the graduated tube.

01/2013:1583

WILLOW BARK

Salicis cortex

DEFINITION

Whole or fragmented dried bark of young branches or whole dried pieces of current-year twigs of various species of genus *Salix* including *S. purpurea* L., *S. daphnoides* Vill. and *S. fragilis* L.

Content: minimum 1.5 per cent of total salicylic derivatives, expressed as salicin ($C_{13}H_{18}O_7$; M_r 286.3) (dried drug).

IDENTIFICATION

A. The bark is 1-2 mm thick and occurs in flexible, elongated, quilled or curved pieces. The outer surface is smooth or slightly wrinkled longitudinally and greenish-yellow or brownish-grey. The inner surface is smooth or finely striated longitudinally and white, pale yellow or reddish-brown, depending on the species. The fracture is short in the outer part and coarsely fibrous in the inner region. The diameter of current-year twigs is not greater than 10 mm. The wood is white or pale yellow.

B. Microscopic examination (*2.8.23*). The powder is pale yellow, greenish-yellow or light brown. Examine under a microscope using *chloral hydrate solution R*. The powder shows the following diagnostic characters (Figure 1583.-1): bundles [B, C] of narrow fibres [Ba, Ca], up to about 600 µm long, with very thick walls and surrounded by a crystal sheath containing prisms of calcium oxalate [Bb, Cb]; parenchymatous cells of the cortex [D, J], with thick, pitted and deeply beaded walls [Da], and containing large cluster crystals of calcium oxalate [Ga, Ja]; some parenchyma cells are collenchymatous [G]; uniseriate medullary rays, in tangential section [Db]; thickened cork cells, in surface view [F]; numerous scattered prism crystals [E] and cluster crystals [A] of calcium oxalate; fragments of brownish collenchyma from the buds may also be present. Twigs show, additionally, wood fragments [H] composed of lignified fibres [Ha] and vessels [Hb], sometimes accompanied by medullary rays [Hc].

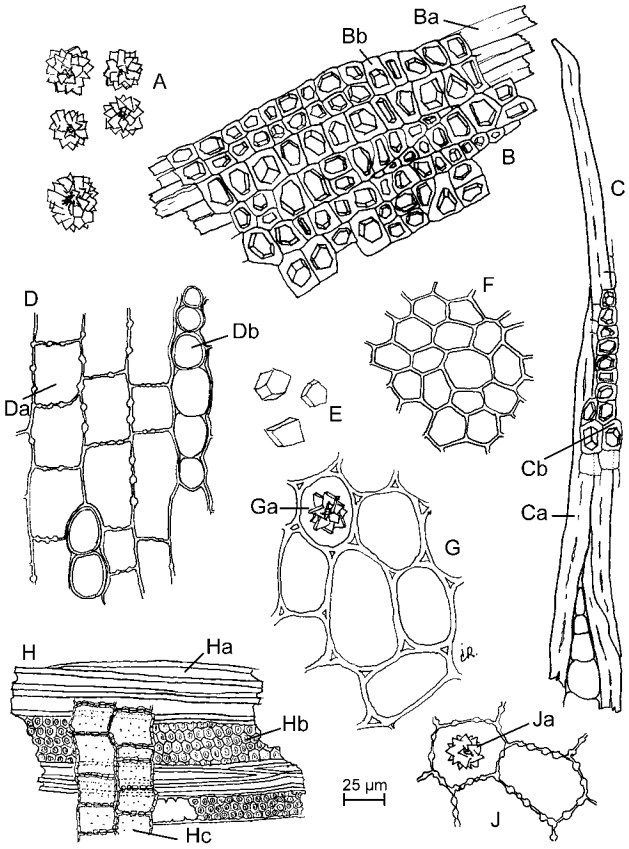

Figure 1583.-1. – *Illustration for identification test B of powdered herbal drug of willow bark*

C. Thin-layer chromatography (*2.2.27*).

Test solution (a). To 1.0 g of the powdered herbal drug (355) (*2.9.12*) add 10 mL of *methanol R*. Heat on a water-bath at about 50 °C, with frequent shaking, for 10 min. Cool and filter.

Test solution (b). To 5.0 mL of test solution (a) add 1.0 mL of a 50 g/L solution of *anhydrous sodium carbonate R* and heat in a water-bath at about 60 °C for 10 min. Cool and filter if necessary.

Reference solution. Dissolve 2 mg of *salicin R* and 2 mg of *chlorogenic acid R* in 1.0 mL of *methanol R*.

Plate: *TLC silica gel plate R* (5-40 µm) [or *TLC silica gel plate R* (2-10 µm)].

Mobile phase: *water R*, *methanol R*, *ethyl acetate R* (8:15:77 *V/V/V*).

Application: 10 µL [or 2 µL] as bands.

Development: over a path of 15 cm [or 6 cm].

Drying: in a current of warm air.

Detection: treat with a mixture of 5 volumes of *sulfuric acid R* and 95 volumes of *methanol R*. Heat at 100-105 °C for 5 min and examine in daylight.

Results: see below the sequence of zones present in the chromatograms obtained with the reference solution and test solutions (a) and (b). Furthermore, other zones may be present in the chromatograms obtained with test solutions (a) and (b).

Top of the plate		
———		———
	Several reddish-violet zones may be present	
Salicin: a reddish-violet zone	A weak reddish-violet zone (salicin)	A reddish-violet zone (salicin)
———		———
Chlorogenic acid: a brown zone		
Reference solution	**Test solution (a)**	**Test solution (b)**

TESTS

Foreign matter (*2.8.2*): maximum 3 per cent of twigs with a diameter greater than 10 mm and maximum 2 per cent of other foreign matter.

Cadmium (*2.4.27*): maximum 2.0 ppm.

Loss on drying (*2.2.32*): maximum 11 per cent, determined on 1.000 g of the powdered herbal drug (355) (*2.9.12*) by drying in an oven at 105 °C for 2 h.

Total ash (*2.4.16*): maximum 10 per cent.

ASSAY

Liquid chromatography (*2.2.29*).

Test solution. To 1.000 g of the powdered herbal drug (355) (*2.9.12*) add 40 mL of *methanol R* and 40.0 mL of a 4.2 g/L solution of *sodium hydroxide R*. Heat in a water-bath at about 60 °C under a reflux condenser, with frequent shaking, for about 1 h. After cooling, add 4.0 mL of a 103.0 g/L solution of *hydrochloric acid R*. Filter the suspension into a 100 mL volumetric flask, wash and dilute to 100.0 mL with a mixture of equal volumes of *methanol R* and *water R*. Filter through a membrane filter (nominal pore size 0.45 µm).

Reference solution. Dissolve 5.0 mg of *picein R* in 25.0 mL of a mixture of 20 volumes of *water R* and 80 volumes of *methanol R* (solution A). Dissolve 15.0 mg of *salicin CRS* in 25 mL of a mixture of 20 volumes of *water R* and 80 volumes of *methanol R*; add 5.0 mL of solution A and dilute to 50.0 mL with *water R*.

Column:

- *size*: *l* = 0.10 m, Ø = 4.6 mm;
- *stationary phase*: *octadecylsilyl silica gel for chromatography R* (3 µm).

Mobile phase:

- *mobile phase A*: *tetrahydrofuran R*, 0.5 per cent *V/V* solution of *phosphoric acid R* (1.8:98.2 *V/V*);
- *mobile phase B*: *tetrahydrofuran R*;

Time (min)	Mobile phase A (per cent *V/V*)	Mobile phase B (per cent *V/V*)
0 - 15	100	0
15 - 17	100 → 90	0 → 10
17 - 23	90	10

Flow rate: 1.0 mL/min.

Detection: spectrophotometer at 270 nm.

Injection: 10 µL.

Retention time: salicin = about 6.4 min; picein = about 7.7 min.

System suitability: reference solution:

- *resolution*: minimum 1.5 between the peaks due to salicin and picein.

Calculate the percentage content of total salicylic derivatives, expressed as salicin, using the following expression:

$$\frac{A_1 \times m_2 \times p \times 2}{A_2 \times m_1}$$

A_1 = area of the peak due to salicin in the chromatogram obtained with the test solution;

A_2 = area of the peak due to salicin in the chromatogram obtained with the reference solution;

m_1 = mass of the herbal drug to be examined used to prepare the test solution, in grams;

m_2 = mass of *salicin CRS* used to prepare the reference solution, in grams;

p = percentage content of salicin in *salicin CRS*.

04/2008:2312

WILLOW BARK DRY EXTRACT

Salicis corticis extractum siccum

DEFINITION

Dry extract produced from *Willow bark (1583)*.

Content: minimum 5.0 per cent of total salicylic derivatives, expressed as salicin ($C_{13}H_{18}O_7$; M_r 286.3) (dried extract).

PRODUCTION

The extract is produced from the herbal drug by a suitable procedure using either water or a hydroalcoholic solvent equivalent in strength to a maximum of 80 per cent *V/V* ethanol.

CHARACTERS

Appearance: yellowish-brown amorphous powder.

IDENTIFICATION

Thin-layer chromatography (*2.2.27*).

Test solution (a). To 0.200 g of the extract to be examined add 5 mL of *methanol R*. Sonicate for 5 min, filter and dilute to 10 mL with *methanol R*.

Test solution (b). To 5.0 mL of test solution (a) add 1.0 mL of a 50 g/L solution of *anhydrous sodium carbonate R* and heat in a water-bath at about 60 °C for 10 min. Cool and filter if necessary.

Reference solution. Dissolve 2.0 mg of *salicin R* and 2.0 mg of *chlorogenic acid R* in 1.0 mL of *methanol R*.

Plate: *TLC silica gel plate R* (5-40 µm) [or *TLC silica gel plate R* (2-10 µm)].

Mobile phase: *water R*, *methanol R*, *ethyl acetate R* (8:15:77 *V/V/V*).

Application: 10 µL [or 2 µL] as bands.

Development: over a path of 15 cm [or 6 cm].

Drying: in a current of warm air.

Detection: spray with a mixture of 5 volumes of *sulfuric acid R* and 95 volumes of *methanol R*. Heat at 100-105 °C for 5 min and examine in daylight.

Results: see below the sequence of the zones present in the chromatograms obtained with the reference solution and test solutions (a) and (b). Furthermore, other zones may be present in the chromatogram obtained with test solutions (a) and (b).

Top of the plate		
Salicin: a reddish-violet zone Chlorogenic acid: a brown zone	Several reddish-violet zones may be present A weak reddish-violet zone (salicin)	A reddish-violet zone (salicin)
Reference solution	**Test solution (a)**	**Test solution (b)**

ASSAY

Liquid chromatography (*2.2.29*).

Test solution. To 0.300 g of the extract to be examined add 40 mL of *methanol R* and 40.0 mL of *0.1 M sodium hydroxide*. Heat in a water-bath at about 60 °C under a reflux condenser, with frequent shaking, for about 1 h. After cooling, add 4.0 mL of *1 M hydrochloric acid*. Filter the suspension into a 100 mL volumetric flask, then wash and dilute to 100.0 mL with a mixture of equal volumes of *water R* and *methanol R*. Filter through a membrane filter (nominal pore size 0.45 µm).

Reference solution. Dissolve 5.0 mg of *picein R* in 25.0 mL of a mixture of 20 volumes of *water R* and 80 volumes of *methanol R* (solution A). Dissolve 15.0 mg of *salicin CRS* in 25 mL of a mixture of 20 volumes of *water R* and 80 volumes of *methanol R*. Add 5.0 mL of solution A and dilute to 50.0 mL with *water R*.

Column:

- *size*: *l* = 0.10 m, Ø = 4.6 mm;
- *stationary phase*: *octadecylsilyl silica gel for chromatography R* (3 µm).

Mobile phase:

- *mobile phase A*: *tetrahydrofuran R*, 0.5 per cent *V/V* solution of *phosphoric acid R* (1.8:98.2 *V/V*);
- *mobile phase B*: *tetrahydrofuran R*;

Time (min)	Mobile phase A (per cent *V/V*)	Mobile phase B (per cent *V/V*)
0 - 15	100	0
15 - 17	100 → 90	0 → 10
17 - 23	90	10
23 - 25	90 → 100	10 → 0
25 - 40	100	0

Flow rate: 1.0 mL/min.

Detection: spectrophotometer at 270 nm.

Injection: 10 µL.

Retention time: salicin = about 6.4 min; picein = about 7.7 min.

System suitability: reference solution:

- *resolution*: minimum 1.5 between the peaks due to salicin and picein.

Calculate the percentage content of total salicylic derivatives, expressed as salicin, from the following expression:

$$\frac{A_1 \times m_2 \times p \times 2}{A_2 \times m_1}$$

A_1 = area of the peak due to salicin in the chromatogram obtained with the test solution;

A_2 = area of the peak due to salicin in the chromatogram obtained with the reference solution;

m_1 = mass of the extract to be examined used to prepare the test solution, in grams;

m_2 = mass of *salicin CRS* used to prepare the reference solution, in grams;

p = percentage content of salicin in *salicin CRS*.

04/2011:1380

WORMWOOD

Absinthii herba

DEFINITION

Basal leaves or slightly leafy, flowering tops, or mixture of these dried, whole or cut organs of *Artemisia absinthium* L.

Content: minimum 2 mL/kg of essential oil (dried drug).

IDENTIFICATION

A. The leaves are greyish or greenish, densely tomentose on both surfaces. The basal leaves, with long petioles, have triangular or oval bipinnatisect or tripinnatisect lamina, with rounded or lanceolate segments. The cauline leaves are less segmented and the apical leaves are lanceolate. The stem of the flower-bearing region is greenish-grey, tomentose, up to 2.5 mm in diameter and usually with 5 flattened longitudinal grooves. The capitula are arranged as loose, axillary panicles, inserted at the level of the lanceolate or slightly pinnatisect leaves; they are spherical or flattened hemispherical, 2-4 mm in diameter and consist of a grey, tomentose involucre, the outer bracts linear, inner layer ovate, blunt at the apices with scarious margins, a receptacle with very long paleae up to 1 mm or more long, numerous yellow, tubular, hermaphroditic florets about 2 mm long and few yellow, ray florets.

B. Microscopic examination (*2.8.23*). The powder is greenish-grey. Examine under a microscope using *chloral hydrate solution R*. The powder shows the following diagnostic characters (Figure 1380.-1.): many T-shaped trichomes [A] with a short uniseriate stalk consisting of 1-5 small cells, perpendicularly capped by a very long, undulating terminal cell tapering at the ends; fragments of epidermises in surface view [D] with sinuous or wavy walls, anomocytic stomata (*2.8.3*) [Da], covering trichomes [Db] and glandular trichomes containing oil [Dc] or not containing oil [Dd], each with a short, biseriate, 2-celled stalk and a biseriate head with 2-4 cells; free glandular trichomes in side view [C]; fragments of the corollas of the tubular and ray florets, some containing small cluster crystals of calcium oxalate [H]; numerous paleae each composed of a small cell forming a stalk and a very long, cylindrical and thin-walled terminal cell about 1-1.5 mm long, either whole [E] or limited to the distal part [B]; spheroidal pollen grains, about 30 µm in diameter, with 3 pores and a finely warty exine [G]; fragments of vascular tissue from the leaves [F] or the stems [J] consisting of vessels with spiral or annular thickenings [Fa], or with bordered pits [Ja], fibres [Fb, Jb] and parenchymatous cells with pitted, moderately thickened walls [Fc, Jc].

Herbal drugs

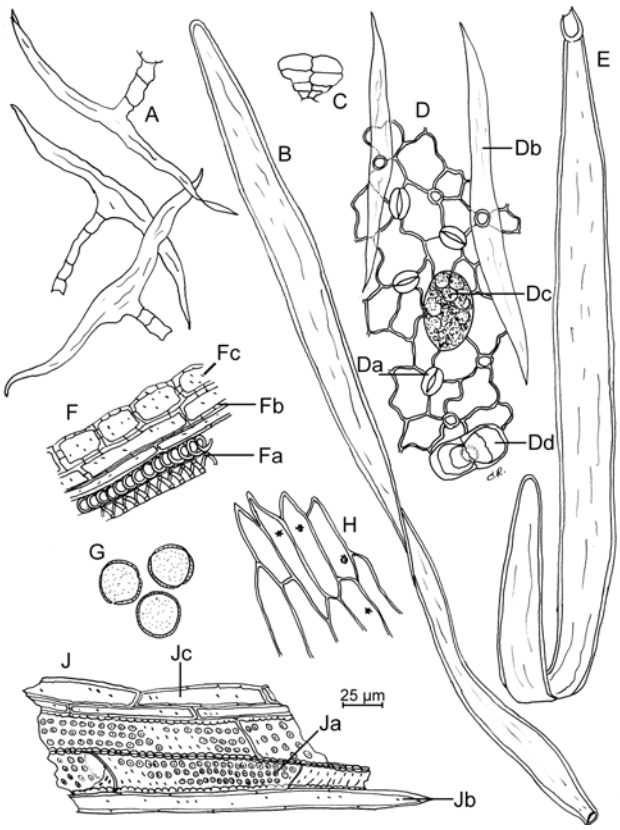

Figure 1380.-1. – *Illustration for identification test B of powdered herbal drug of wormwood*

C. Thin-layer chromatography (*2.2.27*).

Test solution. Place 2 g of the powdered herbal drug (355) (*2.9.12*) in 50 mL of boiling *water R* and allow to stand for 5 min, shaking the flask several times. After cooling, add 5 mL of a 100 g/L solution of *lead acetate R*. Mix and filter. Rinse the flask and the residue on the filter with 20 mL of *water R*. Shake the filter with 50 mL of *methylene chloride R*. Separate the organic layer, dry over *anhydrous sodium sulfate R*, filter and evaporate the filtrate to dryness on a water-bath. Dissolve the residue in 0.5 mL of *ethanol (96 per cent) R*.

Reference solution. Dissolve 2 mg of *methyl red R* and 2 mg of *resorcinol R* in 10.0 mL of *methanol R*.

Plate: *TLC silica gel plate R*.

Mobile phase: *acetone R*, *glacial acetic acid R*, *toluene R*, *methylene chloride R* (10:10:30:50 *V/V/V/V*).

Application: 10 µL as bands.

Development: over a path of 15 cm.

Drying: in air.

Detection A: spray with *acetic anhydride - sulfuric acid solution R* and examine in daylight.

Results A: the chromatogram obtained with the test solution shows a blue zone due to artabsin shortly above a red zone due to methyl red in the chromatogram obtained with the reference solution.

Detection B: examine in daylight while heating at 100-105 °C for 5 min.

Results B: the chromatogram obtained with the reference solution shows in the middle third a red zone due to methyl red and below it a light pink zone due to resorcinol. The chromatogram obtained with the test solution shows an intense red or brownish-red zone due to absinthin with a similar R_F value to that of the zone due to resorcinol in the chromatogram obtained with the reference solution. Other zones are visible, but less intense than that due to absinthin.

TESTS

Foreign matter (*2.8.2*): maximum 5 per cent of stems with a diameter greater than 4 mm and maximum 2 per cent of other foreign matter.

Bitterness value (*2.8.15*): minimum 10 000.

Loss on drying (*2.2.32*): maximum 10.0 per cent, determined on 1.000 g of the powdered herbal drug (355) (*2.9.12*) by drying in an oven at 105 °C for 2 h.

Total ash (*2.4.16*): maximum 12.0 per cent.

Ash insoluble in hydrochloric acid (*2.8.1*): maximum 1.0 per cent.

ASSAY

Essential oil (*2.8.12*). Use 50.0 g of the cut drug, a 1000 mL round-bottomed flask and 500 mL of *water R* as the distillation liquid. Add 0.5 mL of *xylene R* in the graduated tube. Distil at a rate of 2-3 mL/min for not less than 3 h.

01/2012:1382

YARROW

Millefolii herba

DEFINITION

Whole or cut, dried flowering tops of *Achillea millefolium* L.

Content:

- *essential oil*: minimum 2 mL/kg (dried drug);
- *proazulenes, expressed as chamazulene* ($C_{14}H_{16}$; M_r 184.3): minimum 0.02 per cent (dried drug).

IDENTIFICATION

A. The leaves are green or greyish-green, faintly pubescent on the upper surface and more pubescent on the lower surface, 2-3 pinnately divided with linear lobes and a finely pointed whitish tip. The capitula are arranged in a corymb at the end of the stem. Each capitulum, 3-5 mm in diameter, consists of the receptacle, usually 4-5 ligulate ray-florets and 3-20 tubular disk-florets. The involucre consists of 3 rows of imbricate lanceolate, pubescent green bracts arranged with a brownish or whitish, membranous margin. The receptacle is slightly convex and, in the axillae of paleae, bears ligulate ray-florets with a three-lobed, whitish or reddish ligule and tubular disk-florets with a radial, five-lobed, yellowish or light brownish corolla. The pubescent green, partly brown or violet stems are longitudinally furrowed, up to 3 mm thick with a light-coloured medulla.

B. Microscopic examination (*2.8.23*). The powder is green or greyish-green. Examine under a microscope using *chloral hydrate solution R*. The powder shows the following diagnostic characters (Figure 1382.-1): fragments of the stem epidermis, in surface view [K], with cells having a smooth cuticle and anomocytic stomata (*2.8.3*); fragments of leaf and bract epidermises, in surface view [B], with cells having wavy and irregularly thickened walls, a finely striated cuticle and anomocytic stomata (*2.8.3*); very rare glandular trichomes with a short stalk and a head formed of 2 rows of 3-5 cells enclosed in a bladder-like membrane [H]; uniseriate, whole or fragmented covering trichomes [A] consisting of 4-6 small, more or less isodiametric cells at the base and a thick-walled, often somewhat tortuous terminal cell, about 400 µm to greater than 1000 µm long; fragments of the ligulate corolla with papillary epidermal cells [D]; fragments of the corolla tubes, in surface view, with sinuous epidermal cells, covered by a thin striated cuticle [F]; small-celled parenchyma from the corolla tubes containing cluster crystals of calcium oxalate [E]; groups of lignified and pitted cells from the bracts [G]; spherical pollen grains, about 30 µm in diameter, with 3 germinal

pores and a spiny exine [C]; groups of sclerenchymatous fibres and small vessels with spiral or annular thickening, from the stem [J].

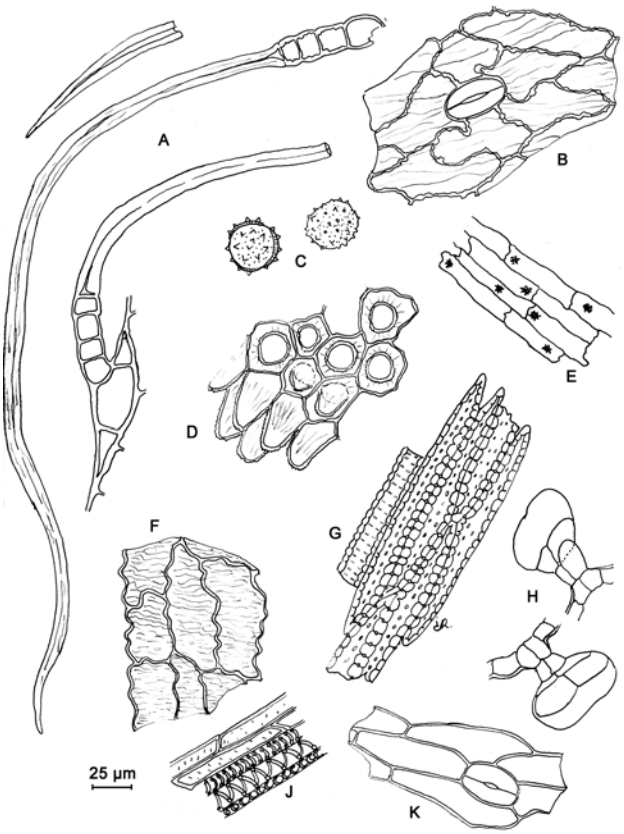

Figure 1382.-1. – *Illustration for identification test B of powdered herbal drug of yarrow*

C. To 2.0 g of the powdered herbal drug (710) (*2.9.12*) add 25 mL of *ethyl acetate R*, shake for 5 min and filter. Evaporate to dryness on a water-bath and dissolve the residue in 0.5 mL of *toluene R* (solution A). To 0.1 mL of this solution add 2.5 mL of *dimethylaminobenzaldehyde solution R8* and heat on a water-bath for 2 min. Allow to cool. Add 5 mL of *light petroleum R* and shake the mixture vigorously. The aqueous layer shows a blue or greenish-blue colour.

D. Thin-layer chromatography (*2.2.27*).

Test solution. Use solution A prepared in identification test C.

Reference solution. Dissolve 10 mg of *cineole R* and 10 mg of *guaiazulene R* in 20 mL of *toluene R*.

Plate: *TLC silica gel plate R*.

Mobile phase: *ethyl acetate R*, *toluene R* (5:95 *V/V*).

Application: 20 µL as bands.

Development: over a path of 10 cm.

Drying: in air.

Detection: spray with *anisaldehyde solution R*, heat at 100-105 °C for 5-10 min and examine in daylight.

Results: the chromatogram obtained with the reference solution shows in the upper part a red zone (guaiazulene) and in the middle part a blue or greyish-blue zone (cineole). The chromatogram obtained with the test solution shows a violet zone a little above the zone due to guaiazulene in the chromatogram obtained with the reference solution; below this zone a reddish-violet zone; below which, 1-2 not clearly separated greyish-violet or greyish zones (which changes to greenish-grey after a few hours) and a reddish-violet zone a little above the zone due to cineole in the chromatogram obtained with the reference solution. Further faint zones may be present.

TESTS

Foreign matter (*2.8.2*): maximum 5 per cent of stems with a diameter greater than 3 mm and maximum 2 per cent of other foreign matter.

Loss on drying (*2.2.32*): maximum 12.0 per cent, determined on 0.500 g of the powdered herbal drug (355) (*2.9.12*) by drying in an oven at 105 °C for 2 h.

Total ash (*2.4.16*): maximum 10.0 per cent.

Ash insoluble in hydrochloric acid (*2.8.1*): maximum 2.5 per cent.

ASSAY

Essential oil (*2.8.12*). Use 20.0 g of cut drug, a 1000 mL round-bottomed flask and 500 mL of a mixture of 1 volume of *water R* and 9 volumes of *ethylene glycol R* as the distillation liquid. Add 0.2 mL of *xylene R* in the graduated tube. Distil at a rate of 2-3 mL/min for 2 h.

Stop cooling at the end of distillation and continue distilling until the blue, steam-volatile components have reached the lower end of the cooler. Immediately start cooling again, taking care to avoid warming the separation space. Stop the distillation after 5 min. Replace the 1000 mL round-bottomed flask by a 250 mL round-bottomed flask containing a mixture of 0.4 mL of *xylene R* and 50 mL of *water R*. Distil for 15 min. After 10 min read the total volume. To determine the blank value, use 0.2 mL of *xylene R* in the graduated tube and distil a mixture of 0.4 mL of *xylene R* and 50 mL of *water R* for 15 min.

Proazulenes. To ensure that as little water as possible is transferred, transfer the blue essential oil-xylene mixture obtained in the assay of essential oil into a 50 mL volumetric flask with the aid of small portions of *xylene R*, rinsing the graduated tube of the apparatus with *xylene R* and dilute to 50.0 mL with the same solvent. Measure the absorbance (*2.2.25*) at 608 nm using *xylene R* as the compensation liquid.

Calculate the percentage content of proazulenes, expressed as chamazulene, using the following expression:

$$\frac{A \times 2.1}{m}$$

i.e. taking the specific absorbance of chamazulene to be 23.8.

A = absorbance at 608 nm;

m = mass of the herbal drug to be examined, in grams.

01/2008:90006

INTRODUCTION

All general texts and other monographs of the European Pharmacopoeia that are relevant to homoeopathy are applicable.

The 'Homoeopathy' chapter of the European Pharmacopoeia contains general monographs and individual monographs describing starting materials and preparations used virtually exclusively for homoeopathic medicines. Reference to these monographs for other purposes may be authorised by licensing authorities.

01/2012:2045

HERBAL DRUGS FOR HOMOEOPATHIC PREPARATIONS

Plantae medicinales ad praeparationes homoeopathicas

DEFINITION

Herbal drugs for homoeopathic preparations are mainly whole plants or parts of plants, fragmented or broken, and include algae, fungi or lichens, in an unprocessed state, usually in fresh form. The state, fresh or dried, in which the drug is used, is defined in the individual monograph of the European Pharmacopoeia or, in its absence, in the individual monograph of an official national pharmacopoeia of a member state. In the absence of such a monograph, the state in which the herbal drug is used has to be defined. Certain exudates that have not been subjected to a specific treatment are also considered to be herbal drugs for homoeopathic preparations. Herbal drugs for homoeopathic preparations are precisely defined by the botanical scientific name of the source species according to the binomial system (genus, species, variety and author).

Whole describes a herbal drug for homoeopathic preparations that has not been reduced in size and is presented, dried or undried, as harvested.

Fragmented describes a herbal drug for homoeopathic preparations that has been reduced in size after harvesting to permit ease of handling, drying and/or packaging.

Broken describes a herbal drug for homoeopathic preparations in which the more fragile parts of the plant have broken during drying, packaging or transportation.

For dried herbal drugs for homoeopathic preparations, *cut* describes size reduction, other than powdering, that reduces the particle size below that which is described in the macroscopic identity of the herbal drug for homoeopathic preparations.

PRODUCTION

Herbal drugs for homoeopathic preparations are obtained from cultivated or wild plants. Suitable collection, cultivation, harvesting, sorting, drying, fragmentation and storage conditions are essential to guarantee the quality of herbal drugs for homoeopathic preparations.

Herbal drugs for homoeopathic preparations are, as far as possible, free from impurities such as soil, dust, dirt and other contaminants such as fungal, insect and other animal contaminants. They do not present signs of decay.

If a decontaminating treatment has been used, it is necessary to demonstrate that the constituents of the plant are not affected and that no harmful residues remain. The use of ethylene oxide is prohibited for the decontamination of herbal drugs for homoeopathic preparations.

Fresh herbal drugs are processed as rapidly as possible after harvesting. Where justified and authorised for transportation or storage purposes, fresh plant material may be deep-frozen; it may also be kept in ethanol (96 per cent) or in ethanol of a suitable concentration, provided the whole material including the storage medium is used for processing.

Adequate measures have to be taken in order to ensure that the microbiological quality of homoeopathic preparations containing 1 or more herbal drugs comply with the recommendations given in general chapter *5.1.4. Microbiological quality of non-sterile pharmaceutical preparations and substances for pharmaceutical use*.

IDENTIFICATION

Herbal drugs for homoeopathic preparations are identified using their macroscopic and, where necessary, microscopic descriptions and any further tests that may be required (for example, thin-layer chromatography).

TESTS

The tests for foreign matter and loss on drying should be performed before any further processing of the fresh plant.

Foreign matter (*2.8.2*). Where a fresh plant is used as a starting material for the manufacture of homoeopathic preparations, the content of foreign matter is as low as possible; if necessary, the maximum content of foreign matter is indicated in the individual monograph.

Where a dried plant is used as a starting material for the manufacture of homoeopathic preparations, carry out a test for foreign matter, unless otherwise prescribed in the individual monograph. The content of foreign matter is not more than 2 per cent *m/m*, unless otherwise prescribed or justified and authorised.

Adulteration. A specific appropriate test may apply to herbal drugs for homoeopathic preparations liable to be falsified.

Loss on drying (*2.2.32*). Carry out a test for loss on drying on dried herbal drugs for homoeopathic preparations.

If a fresh plant is processed more than 24 h after harvesting, a test for loss on drying should be carried out. The minimum limit is indicated in the individual monograph.

Water (*2.2.13*). A determination of water is carried out on herbal drugs for homoeopathic preparations with a high essential oil content.

Pesticides (*2.8.13*). Herbal drugs for homoeopathic preparations comply with the requirements for pesticide residues. The requirements take into account the origin and the nature of the plant, where necessary the preparation in which the plant might be used and, where available, knowledge of the complete record of treatment of the batch of the plant. Where justified, the test for pesticides may be performed on the mother tincture according to the requirements of the general monograph *Mother tinctures for homoeopathic preparations (2029)*.

If appropriate, herbal drugs for homoeopathic preparations comply with other tests, such as the following, for example.

Total ash (*2.4.16*).

Bitterness value (*2.8.15*).

Heavy metals (*2.4.27*). Unless otherwise stated in an individual monograph or unless otherwise justified and authorised:

- *cadmium*: maximum 1.0 ppm;
- *lead*: maximum 5.0 ppm;
- *mercury*: maximum 0.1 ppm.

If justified by the nature or origin of the herbal drug or if required by the competent authority, suitable limits for the content of other heavy metals such as arsenic or nickel are defined.

Where justified, the test for heavy metals may be performed on the mother tincture according to the requirements of the general monograph *Mother tinctures for homoeopathic preparations (2029)*.

Aflatoxin B_1 (*2.8.18*). Where appropriate, limits for aflatoxins may be required.

Ochratoxin A (*2.8.22*). Where appropriate, a limit for ochratoxin A may be required.

Radioactive contamination. In some specific circumstances, the risk of radioactive contamination is to be considered.

ASSAY

Where applicable, herbal drugs for homoeopathic preparations are assayed by an appropriate method.

STORAGE

Store dried herbal drugs protected from light.

07/2011:1038

HOMOEOPATHIC PREPARATIONS

Praeparationes homoeopathicae

DEFINITION

Homoeopathic preparations are prepared from substances, products or preparations called stocks, in accordance with a homoeopathic manufacturing procedure. A homoeopathic preparation is usually designated by the Latin name of the stock, followed by an indication of the degree of dilution.

Raw materials

Raw materials for the production of homoeopathic preparations may be of natural or synthetic origin.

For raw materials of zoological or human origin, adequate measures are taken to minimise the risk of agents of infection, including viruses (*5.1.7*), in the homoeopathic preparations. For this purpose, it is demonstrated that:

- the method of production includes a step or steps that have been shown to remove or inactivate agents of infection;
- where applicable, raw materials of zoological origin comply with the monograph *Products with risk of transmitting agents of animal spongiform encephalopathies (1483)*;
- where applicable, the animals and the tissues used to obtain the raw materials comply with the health requirements of the competent authorities for animals for human consumption;
- for materials of human origin, the donor follows the recommendations applicable to human blood donors and to donated blood (see *Human plasma for fractionation (0853)*), unless otherwise justified and authorised.

A raw material of botanical, zoological or human origin may be used either in the fresh state or in the dried state. Where appropriate, fresh material may be kept deep-frozen. Raw materials of botanical origin comply with the requirements of the monograph *Herbal drugs for homoeopathic preparations (2045)*.

Where justified and authorised for transportation or storage purposes, fresh plant material may be kept in ethanol (96 per cent) or in alcohol of a suitable concentration, provided the whole material including the storage medium is used for processing.

Raw materials comply with any requirements of the relevant monographs of the European Pharmacopoeia.

Vehicles

Vehicles are excipients used for the preparation of certain stocks or for the potentisation process. They may include, for example: purified water, alcohol of a suitable concentration, glycerol and lactose.

Vehicles comply with any requirements of the relevant monographs of the European Pharmacopoeia.

Stocks

Stocks are substances, products or preparations used as starting materials for the production of homoeopathic preparations. A stock is usually one of the following: a mother tincture or a glycerol macerate, for raw materials of botanical, zoological or human origin, or the substance itself, for raw materials of chemical or mineral origin.

Mother tinctures comply with the requirements of the monograph *Mother tinctures for homoeopathic preparations (2029)*.

Glycerol macerates are liquid preparations obtained from raw materials of botanical, zoological or human origin by using glycerol or a mixture of glycerol and either alcohol of a suitable concentration or a solution of sodium chloride of a suitable concentration.

Potentisation

Dilutions and triturations are obtained from stocks by a process of potentisation in accordance with a homoeopathic manufacturing procedure: this means successive dilutions and succussions, or successive appropriate triturations, or a combination of the 2 processes.

The potentisation steps are usually one of the following:

- 1 part of the stock plus 9 parts of the vehicle; they may be designated as 'D', 'DH' or 'X' (decimal);
- 1 part of the stock plus 99 parts of the vehicle; they may be designated as 'C' or 'CH' (centesimal).

The number of potentisation steps defines the degree of dilution; for example, 'D3', '3 DH' or '3X' means 3 decimal potentisation steps, and 'C3', '3 CH' or '3C' means 3 centesimal potentisation steps.

'LM-' (or 'Q-') potencies are manufactured according to a specific procedure.

Dosage forms

A dosage form of a homoeopathic preparation complies with any relevant dosage form monograph in the European Pharmacopoeia, and with the following:

- for the purpose of dosage forms for homoeopathic use, 'active substances' are considered to be 'dilutions or triturations of homoeopathic stocks';
- these dosage forms are prepared using appropriate excipients;
- the test for uniformity of content (*2.9.6*) or uniformity of dosage units (*2.9.40*) is normally not appropriate; however, in certain circumstances, it is required by the competent authority.

Homoeopathic dosage form 'pillule'

Pillules for homoeopathic use are solid preparations obtained from sucrose, lactose or other suitable excipients. They may be prepared by impregnation of preformed pillules with a dilution or dilutions of homoeopathic stocks or by progressive addition of these excipients and the addition of a dilution or dilutions of homoeopathic stocks. They are intended for oral or sublingual use.

Homoeopathic dosage form 'tablet'

Tablets for homoeopathic use are solid preparations obtained from sucrose, lactose or other suitable excipients according to the monograph *Tablets (0478)*. They may either be prepared by compressing one or more solid active substances with the excipients or by impregnating preformed tablets with a dilution or dilutions of homoeopathic stocks. The preformed tablets for impregnation are obtained from sucrose, lactose or other suitable excipients according to the monograph *Tablets (0478)*. They are intended for oral or sublingual use.

Manufacturing methods

Homoeopathic preparations are manufactured using a range of methods of preparation and are presented in various dosage forms (covered by general dosage form monographs). The methods of preparation are described in the monograph *Methods of preparation of homoeopathic stocks*

and potentisation (2371). The use of certain preparations obtained using the methods listed below is restricted to certain dosage forms as indicated in Table 1038.-1.

Table 1038.-1.

Manufacturing methods	Dosage forms
2.1.2	Eye drops Solutions for injection Nasal preparations
2.2.1, 2.2.2, 2.2.3	Eye drops Pillules *(globuli velati)* Solutions for injection Nasal preparations Ointments, creams and gels Oral powders (triturations) Suppositories
2.2.4	Solutions for injection
3.1.2, 3.2.2	Eye drops Pillules *(globuli velati)* Solutions for injection Nasal preparations Ointments, creams and gels Suppositories

The competent authority has the right to accept or reject particular combinations of manufacturing method and substance.

01/2011:2371
corrected 7.2

METHODS OF PREPARATION OF HOMOEOPATHIC STOCKS AND POTENTISATION

Via praeparandi stirpes homoeopathicas et potentificandi

Homoeopathic stocks are prepared, using suitable methods, from raw materials that comply with the requirements of the monograph *Homoeopathic preparations (1038).* The methods described below, combined with established methods for potentisation, are examples of methods, but other methods described in an official national pharmacopoeia of a Member State may equally be used.

Where material of animal origin is to be used, particular reference is made to the requirements concerning the use of raw material of zoological or human origin in the monograph *Homoeopathic preparations (1038).*

In the preparation of liquid dilutions, the ethanol of the concentration prescribed in the method may, if necessary, be replaced by ethanol (36 per cent *V/V*) [ethanol (30 per cent *m/m*)] or ethanol (18 per cent *V/V*) [ethanol (15 per cent *m/m*)].

When the individual monograph allows that the mother tincture be prepared from more than one plant species, the mother tincture can be prepared from the specified parts of an individual plant species or from any mixture thereof.

Unless otherwise stated, mother tinctures are prepared by maceration. Maceration lasts not less than 10 days and not more than 30 days.

Maceration may be replaced by long maceration (maximum 60 days) or very long maceration (maximum 180 days), provided it is demonstrated that the quality of the resulting mother tincture is the same as that of the mother tincture prepared by maceration.

Unless otherwise stated in the individual monograph, the term 'part(s)' denotes 'mass part(s)'. Unless otherwise stated in the method, the maximum temperature for the preparation is 25 °C.

1. MOTHER TINCTURES

METHOD 1.1

METHOD 1.1.1 (EQUIVALENT TO HOMÖOPATHISCHES ARZNEIBUCH (HAB) 1a: MOTHER TINCTURES AND LIQUID DILUTIONS)

Method 1.1.1 is used for fresh herbal drugs containing generally more than 70 per cent of expressed juice and no essential oil or resin or mucilage. Mother tinctures prepared according to Method 1.1.1 are mixtures of equal parts of expressed juices and ethanol (90 per cent *V/V*) [ethanol (86 per cent *m/m*)].

Express the comminuted herbal drug. Immediately mix the expressed juice with an equal mass of ethanol (90 per cent *V/V*) [ethanol (86 per cent *m/m*)]. Allow to stand in a closed container at a temperature not exceeding 20 °C for not less than 5 days, then filter.

Adjustment to any value specified in the individual monograph

Determine the percentage dry residue (*2.8.16*) or, where prescribed, the percentage assay content of the above-mentioned filtrate. Calculate the amount (A_1), in kilograms, of ethanol (50 per cent *V/V*) [ethanol (43 per cent *m/m*)] required, using the following expression:

$$\frac{m \times (N_x - N_0)}{N_0}$$

m = mass of filtrate, in kilograms;

N_0 = percentage dry residue or percentage assay content as required in the individual monograph;

N_x = percentage dry residue or percentage assay content of the filtrate.

Mix the filtrate with the calculated amount of ethanol (50 per cent *V/V*) [ethanol (43 per cent *m/m*)]. Allow to stand at a temperature not exceeding 20 °C for not less than 5 days, then filter if necessary.

Potentisation

The 1st 'decimal' dilution (D1) is made from:

2 parts of the mother tincture;

8 parts of ethanol (50 per cent *V/V*) [ethanol (43 per cent *m/m*)].

The 2nd decimal dilution (D2) is made from:

1 part of the 1st 'decimal' dilution;

9 parts of ethanol (50 per cent *V/V*) [ethanol (43 per cent *m/m*)].

Subsequent decimal dilutions are produced as stated for D2.

The 1st 'centesimal' dilution (C1) is made from:

2 parts of the mother tincture;

98 parts of ethanol (50 per cent *V/V*) [ethanol (43 per cent *m/m*)].

The 2nd centesimal dilution (C2) is made from:

1 part of the 1st 'centesimal' dilution;

99 parts of ethanol (50 per cent *V/V*) [ethanol 43 per cent *m/m*)].

Subsequent centesimal dilutions are produced as stated for C2.

METHOD 1.1.2 (EQUIVALENT TO HAB 1b: MOTHER TINCTURES AND LIQUID DILUTIONS)

Method 1.1.2 is used where the latex of a herbal drug is to be processed.

Mother tinctures prepared according to Method 1.1.2 are mixtures of fresh plant latex with ethanol (36 per cent *V/V*) [ethanol (30 per cent *m/m*)]. Mix the fresh latex with 2 parts by mass of ethanol (36 per cent *V/V*) [ethanol (30 per cent *m/m*)] and filter.

Adjustment to any value specified in the individual monograph

Determine the percentage dry residue (*2.8.16*) or, where prescribed, the percentage assay content of the above-mentioned filtrate. Calculate the amount (A_1), in kilograms, of ethanol (36 per cent *V/V*) [ethanol (30 per cent *m/m*)] required, using the following expression:

$$\frac{m \times (N_x - N_0)}{N_0}$$

m = mass of filtrate, in kilograms;

N_0 = percentage dry residue or percentage assay content as required in the individual monograph;

N_x = percentage dry residue or percentage assay content of the filtrate.

Mix the filtrate with the calculated amount of ethanol (36 per cent *V/V*) [ethanol (30 per cent *m/m*)]. Allow to stand at a temperature not exceeding 20 °C for not less than 5 days, then filter if necessary.

Potentisation

The 1st 'decimal' dilution (D1) is made from:

3 parts of the mother tincture;

7 parts of ethanol (36 per cent *V/V*) [ethanol (30 per cent *m/m*)].

The 2nd decimal dilution (D2) is made from:

1 part of the 1st 'decimal' dilution;

9 parts of ethanol (18 per cent *V/V*) [ethanol (15 per cent *m/m*)].

Subsequent decimal dilutions are produced as stated for D2.

METHOD 1.1.3 (EQUIVALENT TO HAB 2a: MOTHER TINCTURES AND LIQUID DILUTIONS)

Method 1.1.3 is used for fresh herbal drugs containing generally less than 70 per cent of expressed juice and more than 60 per cent moisture (loss on drying) and no essential oil or resin.

Mother tinctures prepared according to Method 1.1.3 (ethanol content approximately 50 per cent *V/V* or 43 per cent *m/m*) are prepared by maceration as described below.

Comminute the herbal drug. Take a sample and determine the loss on drying (*2.2.32*). Unless otherwise prescribed, determine the loss on drying on 2.00-5.00 g of comminuted raw material in a flat-bottomed tared vessel, 45-55 mm in diameter, that has been previously dried as indicated for the raw material. Dry the raw material at 105 °C for 2 h then allow to cool in a desiccator.

To the comminuted herbal drug immediately add not less than half the mass of ethanol (90 per cent *V/V*) [ethanol (86 per cent *m/m*)] and store in well-closed containers at a temperature not exceeding 20 °C.

Use the following expression to calculate the amount (A_2), in kilograms, of ethanol (90 per cent *V/V*) [ethanol (86 per cent *m/m*)] required for the mass (m) of raw material, then subtract the amount of ethanol (90 per cent *V/V*) [ethanol (86 per cent *m/m*)] already added and add the difference to the mixture.

$$\frac{m \times T}{100}$$

m = mass of raw material, in kilograms;

T = percentage loss on drying of the sample.

Allow to stand at a temperature not exceeding 20 °C for not less than 10 days, swirling from time to time, then express the mixture and filter the resulting liquid.

Adjustment to any value specified in the individual monograph

Determine the percentage dry residue (*2.8.16*) or, where prescribed, the percentage assay content of the above-mentioned filtrate. Calculate the amount (A_1), in kilograms, of ethanol (50 per cent *V/V*) [ethanol (43 per cent *m/m*)] required, using the following expression:

$$\frac{m \times (N_x - N_0)}{N_0}$$

m = mass of filtrate, in kilograms;

N_0 = percentage dry residue or percentage assay content as required in the individual monograph;

N_x = percentage dry residue or percentage assay content of the filtrate.

Mix the filtrate with the calculated amount of ethanol (50 per cent *V/V*) [ethanol (43 per cent *m/m*)]. Allow to stand at a temperature not exceeding 20 °C for not less than 5 days, then filter if necessary.

Potentisation

The 1st 'decimal' dilution (D1) is made from:

2 parts of the mother tincture;

8 parts of ethanol (50 per cent *V/V*) [ethanol (43 per cent *m/m*)].

The 2nd decimal dilution (D2) is made from:

1 part of the 1st 'decimal' dilution;

9 parts of ethanol (50 per cent *V/V*) [ethanol (43 per cent *m/m*)].

Subsequent decimal dilutions are produced as stated for D2.

The 1st 'centesimal' dilution (C1) is made from:

2 parts of the mother tincture;

98 parts of ethanol (50 per cent *V/V*) [ethanol (43 per cent *m/m*)].

The 2nd centesimal dilution (C2) is made from:

1 part of the 1st 'centesimal' dilution;

99 parts of ethanol (50 per cent *V/V*) [ethanol (43 per cent *m/m*)].

Subsequent centesimal dilutions are produced as stated for C2.

METHOD 1.1.4 (EQUIVALENT TO HAB 2b: MOTHER TINCTURES AND LIQUID DILUTIONS)

Method 1.1.4 is used for fresh herbal drugs containing generally less than 70 per cent of expressed juice and more than 60 per cent moisture (loss on drying) and no essential oil or resin.

Mother tinctures prepared according to Method 1.1.4 (ethanol content approximately 36 per cent *V/V* or 30 per cent *m/m*) are prepared by maceration as described below.

Comminute the herbal drug. Take a sample and determine the loss on drying (*2.2.32*). Unless otherwise prescribed, determine the loss on drying on 2.00-5.00 g of comminuted raw material in a flat-bottomed tared vessel, 45-55 mm in diameter, that has been previously dried as indicated for the raw material. Dry the raw material at 105 °C for 2 h then allow to cool in a desiccator.

To the comminuted herbal drug immediately add not less than half the mass of ethanol (70 per cent *V/V*) [ethanol (62 per cent *m/m*)] and store in well-closed containers at a temperature not exceeding 20 °C.

Use the following expression to calculate the amount (A_2), in kilograms, of ethanol (70 per cent *V/V*) [ethanol (62 per cent *m/m*)] required for the mass (m) of raw material, then

subtract the amount of ethanol (70 per cent *V/V*) [ethanol (62 per cent *m/m*)] already added and add the difference to the mixture.

$$\frac{m \times T}{100}$$

m = mass of raw material, in kilograms;

T = percentage loss on drying of the sample.

Allow to stand at a temperature not exceeding 20 °C for not less than 10 days, swirling from time to time, then express the mixture and filter the resulting liquid.

Adjustment to any value specified in the individual monograph

Determine the percentage dry residue (*2.8.16*) or, where prescribed, the percentage assay content of the above-mentioned filtrate. Calculate the amount (A_1), in kilograms, of ethanol (36 per cent *V/V*) [ethanol (30 per cent *m/m*)] required, using the following expression:

$$\frac{m \times (N_x - N_0)}{N_0}$$

m = mass of filtrate, in kilograms;

N_0 = percentage dry residue or percentage assay content as required in the individual monograph;

N_x = percentage dry residue or percentage assay content of the filtrate.

Mix the filtrate with the calculated amount of ethanol (36 per cent *V/V*) [ethanol (30 per cent *m/m*)]. Allow to stand at a temperature not exceeding 20 °C for not less than 5 days, then filter if necessary.

Potentisation

The 1st 'decimal' dilution (D1) is made from:

2 parts of the mother tincture;

8 parts of ethanol (36 per cent *V/V*) [ethanol (30 per cent *m/m*)].

The 2nd decimal dilution (D2) is made from:

1 part of the 1st 'decimal' dilution;

9 parts of ethanol (18 per cent *V/V*) [ethanol (15 per cent *m/m*)].

Subsequent decimal dilutions are produced as stated for D2.

METHOD 1.1.5 (EQUIVALENT TO HAB 3a: MOTHER TINCTURES AND LIQUID DILUTIONS)

Method 1.1.5 is used for fresh herbal drugs containing essential oil or resin, or generally less than 60 per cent moisture (loss on drying).

Mother tinctures prepared according to Method 1.1.5 (ethanol content approximately 68 per cent *V/V* or 60 per cent *m/m*) are prepared by maceration as described below.

Comminute the herbal drug. Take a sample and determine the loss on drying (*2.2.32*). Unless otherwise prescribed, determine the loss on drying on 2.00-5.00 g of comminuted raw material in a flat-bottomed tared vessel, 45-55 mm in diameter, that has been previously dried as indicated for the raw material. Dry the raw material at 105 °C for 2 h then allow to cool in a desiccator.

To the comminuted herbal drug immediately add not less than half the mass of ethanol (90 per cent *V/V*) [ethanol (86 per cent *m/m*)] and store in well-closed containers at a temperature not exceeding 20 °C.

Use the following expression to calculate the amount (A_3), in kilograms, of ethanol (90 per cent *V/V*) [ethanol (86 per cent *m/m*)] required for the mass (m) of raw material, then subtract the amount of ethanol (90 per cent *V/V*) [ethanol (86 per cent *m/m*)] already added and add the difference to the mixture.

$$\frac{2 \times m \times T}{100}$$

m = mass of raw material, in kilograms;

T = percentage loss on drying of the sample.

Allow to stand at a temperature not exceeding 20 °C for not less than 10 days, swirling from time to time, then express the mixture and filter the resulting liquid.

Adjustment to any value specified in the individual monograph

Determine the percentage dry residue (*2.8.16*) or, where prescribed, the percentage assay content of the above-mentioned filtrate. Calculate the amount (A_1), in kilograms, of ethanol (70 per cent *V/V*) [ethanol (62 per cent *m/m*)] required, using the following expression:

$$\frac{m \times (N_x - N_0)}{N_0}$$

m = mass of filtrate, in kilograms;

N_0 = percentage dry residue or percentage assay content as required in the individual monograph;

N_x = percentage dry residue or percentage assay content of the filtrate.

Mix the filtrate with the calculated amount of ethanol (70 per cent *V/V*) [ethanol (62 per cent *m/m*)]. Allow to stand at a temperature not exceeding 20 °C for not less than 5 days, then filter if necessary.

Potentisation

The 1st 'decimal' dilution (D1) is made from:

3 parts of the mother tincture;

7 parts of ethanol (70 per cent *V/V*) [ethanol (62 per cent *m/m*)].

The 2nd decimal dilution (D2) is made from:

1 part of the 1st 'decimal' dilution;

9 parts of ethanol (70 per cent *V/V*) [ethanol (62 per cent *m/m*)].

Subsequent decimal dilutions are produced as stated for D2. Use ethanol (50 per cent *V/V*) [ethanol (43 per cent *m/m*)] for dilutions from D4 onwards.

The 1st 'centesimal' dilution (C1) is made from:

3 parts of the mother tincture;

97 parts of ethanol (70 per cent *V/V*) [ethanol (62 per cent *m/m*)].

The 2nd centesimal dilution (C2) is made from:

1 part of the 1st 'centesimal' dilution;

99 parts of ethanol (50 per cent *V/V*) [ethanol (43 per cent *m/m*)].

Subsequent centesimal dilutions are produced as stated for C2.

METHOD 1.1.6 (EQUIVALENT TO HAB 3b: MOTHER TINCTURES AND LIQUID DILUTIONS)

Method 1.1.6 is used for fresh herbal drugs containing essential oils or resins or generally less than 60 per cent moisture (loss on drying).

Mother tinctures prepared according to Method 1.1.6 (ethanol content approximately 50 per cent *V/V* or 43 per cent *m/m*) are prepared by maceration as described below.

Comminute the herbal drug. Take a sample and determine the loss on drying (*2.2.32*). Unless otherwise prescribed, determine the loss on drying on 2.00-5.00 g of comminuted raw material in a flat-bottomed tared vessel, 45-55 mm in diameter, that has been previously dried as indicated for the raw material. Dry the raw material at 105 °C for 2 h then allow to cool in a desiccator.

To the comminuted herbal drug immediately add not less than half the mass of ethanol (80 per cent *V/V*) [ethanol (73 per cent *m/m*)] and store in well-closed containers at a temperature not exceeding 20 °C.

Use the following expression to calculate the amount (A_3), in kilograms, of ethanol (80 per cent *V/V*) [ethanol (73 per cent *m/m*)] required for the mass (*m*) of raw material, then subtract the amount of ethanol (80 per cent *V/V*) [ethanol (73 per cent *m/m*)] already added and add the difference to the mixture.

$$\frac{2 \times m \times T}{100}$$

m = mass of raw material, in kilograms;

T = percentage loss on drying of the sample.

Allow to stand at a temperature not exceeding 20 °C for not less than 10 days, swirling from time to time, then express the mixture and filter the resulting liquid.

Adjustment to any value specified in the individual monograph

Determine the percentage dry residue (*2.8.16*) or, where prescribed, the percentage assay content of the above-mentioned filtrate. Calculate the amount (A_1), in kilograms, of ethanol (50 per cent *V/V*) [ethanol (43 per cent *m/m*)] required, using the following expression:

$$\frac{m \times (N_x - N_0)}{N_0}$$

m = mass of filtrate, in kilograms;

N_0 = percentage dry residue or percentage assay content as required in the individual monograph;

N_x = percentage dry residue or percentage assay content of the filtrate.

Mix the filtrate with the calculated amount of ethanol (50 per cent *V/V*) [ethanol (43 per cent *m/m*)]. Allow to stand at a temperature not exceeding 20 °C for not less than 5 days, then filter if necessary.

Potentisation

The 1st 'decimal' dilution (D1) is made from:

3 parts of the mother tincture;

7 parts of ethanol (50 per cent *V/V*) [ethanol (43 per cent *m/m*)].

The 2nd decimal dilution (D2) is made from:

1 part of the 1st 'decimal' dilution;

9 parts of ethanol (36 per cent *V/V*) [ethanol (30 per cent *m/m*)].

The 3rd decimal dilution (D3) is made from:

1 part of the 2nd decimal dilution;

9 parts of ethanol (18 per cent *V/V*) [ethanol (15 per cent *m/m*)].

Subsequent decimal dilutions are produced as stated for D3.

METHOD 1.1.7 (EQUIVALENT TO HAB 3C: MOTHER TINCTURES AND LIQUID DILUTIONS)

Method 1.1.7 is used for fresh herbal drugs containing generally less than 60 per cent moisture (loss on drying).

Mother tinctures prepared according to Method 1.1.7 (ethanol content approximately 36 per cent *V/V* or 30 per cent *m/m*) are prepared by maceration as described below.

Comminute the herbal drug. Take a sample and determine the loss on drying (*2.2.32*). Unless otherwise prescribed, determine the loss on drying on 2.00-5.00 g of comminuted raw material in a flat-bottomed tared vessel, 45-55 mm in diameter, that has been previously dried as indicated for the raw material. Dry the raw material at 105 °C for 2 h then allow to cool in a desiccator.

To the comminuted herbal drug immediately add not less than half the mass of ethanol (50 per cent *V/V*) [ethanol (43 per cent *m/m*)] and store in well-closed containers at a temperature not exceeding 20 °C.

Use the following expression to calculate the amount (A_3), in kilograms, of ethanol (50 per cent *V/V*) [ethanol (43 per cent *m/m*)] required for the mass (*m*) of raw material, then subtract the amount of ethanol (50 per cent *V/V*) [ethanol (43 per cent *m/m*)] already added and add the difference to the mixture.

$$\frac{2 \times m \times T}{100}$$

m = mass of raw material, in kilograms;

T = percentage loss on drying of the sample.

Allow to stand at a temperature not exceeding 20 °C for not less than 10 days, swirling from time to time, then express the mixture and filter the resulting liquid.

Adjustment to any value specified in the individual monograph

Determine the percentage dry residue (*2.8.16*) or, where prescribed, the percentage assay content of the above-mentioned filtrate. Calculate the amount (A_1), in kilograms, of ethanol (36 per cent *V/V*) [ethanol (30 per cent *m/m*)] required, using the following expression:

$$\frac{m \times (N_x - N_0)}{N_0}$$

m = mass of filtrate, in kilograms;

N_0 = percentage dry residue or percentage assay content as required in the individual monograph;

N_x = percentage dry residue or percentage assay content of the filtrate.

Mix the filtrate with the calculated amount of ethanol (36 per cent *V/V*) [ethanol (30 per cent *m/m*)]. Allow to stand at a temperature not exceeding 20 °C for not less than 5 days, then filter if necessary.

Potentisation

The 1st 'decimal' dilution (D1) is made from:

3 parts of the mother tincture;

7 parts of ethanol (36 per cent *V/V*) [ethanol (30 per cent *m/m*)].

The 2nd decimal dilution (D2) is made from:

1 part of the 1st 'decimal' dilution;

9 parts of ethanol (18 per cent *V/V*) [ethanol (15 per cent *m/m*)].

Subsequent decimal dilutions are produced as stated for D2.

METHOD 1.1.8 (EQUIVALENT TO HAB 4a: MOTHER TINCTURES AND LIQUID DILUTIONS)

Method 1.1.8 is generally used for dried herbal drugs.

Mother tinctures prepared according to Method 1.1.8 are prepared by maceration or percolation as described below, using 1 part of dried herbal drug and 10 parts of ethanol of the appropriate concentration (anhydrous, 96 per cent *V/V* - 94 per cent *m/m*, 90 per cent *V/V* - 86 per cent *m/m*, 80 per cent *V/V* - 73 per cent *m/m*, 70 per cent *V/V* - 62 per cent *m/m*, 50 per cent *V/V* - 43 per cent *m/m*, 36 per cent *V/V* - 30 per cent *m/m*, 18 per cent *V/V* - 15 per cent *m/m*), unless otherwise prescribed in the individual monograph.

Production by maceration. Unless otherwise prescribed, comminute the herbal drug, mix thoroughly with ethanol of the appropriate concentration and allow to stand in a closed container for an appropriate time. Separate the residue from the ethanol and, if necessary, press out. In the latter case, combine the 2 liquids obtained.

Production by percolation. If necessary, comminute the herbal drug. Mix thoroughly with a portion of ethanol of the appropriate concentration and allow to stand for an appropriate time. Transfer to a percolator and allow the percolate to flow slowly, at room temperature, making sure that the herbal drug to be extracted is always covered with the remaining ethanol. The residue may be pressed out and the expressed liquid combined with the percolate.

If adjustment to a given concentration is necessary, calculate the amount (A_1), in kilograms, of ethanol of the appropriate concentration required to obtain the concentration specified or used for production, using the following expression:

$$\frac{m \times (N_x - N_0)}{N_0}$$

m = mass of percolate or macerate, in kilograms;

N_0 = percentage dry residue or percentage assay content as required in the individual monograph;

N_x = percentage dry residue or percentage assay content of the percolate or macerate.

Mix the macerate or percolate with the calculated amount of ethanol of the appropriate concentration. Allow to stand at a temperature not exceeding 20 °C for not less than 5 days, then filter if necessary.

Potentisation

The mother tincture corresponds to the 1st decimal dilution (Ø = D1).

The 2nd decimal dilution (D2) is made from:

1 part of the mother tincture (D1);

9 parts of ethanol of the same concentration.

The 3rd decimal dilution (D3) is made from:

1 part of the 2nd decimal dilution;

9 parts of ethanol of the same concentration.

Unless a different ethanol concentration is specified, use ethanol (50 per cent *V/V*) [ethanol (43 per cent *m/m*)] for subsequent decimal dilutions from D4 onwards and proceed as stated for D3.

The 1st 'centesimal' dilution (C1) is made from:

10 parts of the mother tincture (D1);

90 parts of ethanol of the same concentration.

The 2nd centesimal dilution (C2) is made from:

1 part of the 1st 'centesimal' dilution;

99 parts of ethanol (50 per cent *V/V*) [ethanol (43 per cent *m/m*)], unless a different ethanol concentration is specified.

Subsequent centesimal dilutions are produced as stated for C2.

METHOD 1.1.9 (EQUIVALENT TO HAB 4b: MOTHER TINCTURES AND LIQUID DILUTIONS)

Method 1.1.9 is generally used for animal matter.

Mother tinctures prepared according to Method 1.1.9 are prepared by maceration or percolation as described below, using 1 part of animal matter and 10 parts of ethanol of the appropriate concentration (anhydrous, 96 per cent *V/V* - 94 per cent *m/m*, 90 per cent *V/V* - 86 per cent *m/m*, 80 per cent *V/V* - 73 per cent *m/m*, 70 per cent *V/V* - 62 per cent *m/m*, 50 per cent *V/V* - 43 per cent *m/m*, 36 per cent *V/V* - 30 per cent *m/m*, 18 per cent *V/V* - 15 per cent *m/m*), unless otherwise prescribed in the individual monograph.

Production by maceration. Unless otherwise prescribed, comminute the animal matter, mix thoroughly with ethanol of the appropriate concentration and allow to stand in a closed container for an appropriate time. Separate the residue from the ethanol and, if necessary, press out. In the latter case, combine the 2 liquids obtained.

Production by percolation. If necessary, comminute the animal matter. Mix thoroughly with a portion of ethanol of the appropriate concentration and allow to stand for an appropriate time. Transfer to a percolator and allow the percolate to flow slowly at room temperature, making sure that the animal matter to be extracted is always covered with the remaining ethanol. The residue may be pressed out and the expressed liquid combined with the percolate.

If adjustment to a given concentration is necessary, calculate the amount (A_1), in kilograms, of ethanol of the appropriate concentration required to obtain the concentration specified or used for production, using the following expression:

$$\frac{m \times (N_x - N_0)}{N_0}$$

m = mass of percolate or macerate, in kilograms;

N_0 = percentage dry residue or percentage assay content as required in the individual monograph;

N_x = percentage dry residue or percentage assay content of the percolate or macerate.

Mix the macerate or percolate with the calculated amount of ethanol of the appropriate concentration. Allow to stand at a temperature not exceeding 20 °C for not less than 5 days, then filter if necessary.

Potentisation

The mother tincture corresponds to the 1st decimal dilution (Ø = D1).

The 2nd decimal dilution (D2) is made from:

1 part of the mother tincture (D1);

9 parts of ethanol of the same concentration.

The 3rd decimal dilution (D3) is made from:

1 part of the 2nd decimal dilution;

9 parts of ethanol of the same concentration.

Unless a different ethanol concentration is specified, use ethanol (50 per cent *V/V*) [ethanol (43 per cent *m/m*)] for subsequent decimal dilutions from D4 onwards and proceed as stated for D3.

The 1st 'centesimal' dilution (C1) is made from:

10 parts of the mother tincture (D1);

90 parts of ethanol of the same concentration.

The 2nd centesimal dilution (C2) is made from:

1 part of the 1st 'centesimal' dilution;

99 parts of ethanol (50 per cent *V/V*) [ethanol (43 per cent *m/m*)], unless a different ethanol concentration is specified.

Subsequent centesimal dilutions are produced as stated for C2.

METHOD 1.1.10 (FRENCH PHARMACOPOEIA)

Method 1.1.10 is generally used for herbal drugs. The state of the herbal drug, fresh or dried, is specified in the individual monograph.

Mother tinctures prepared according to Method 1.1.10 are prepared by maceration.

Comminute appropriately the herbal drug. Take a sample and determine the loss on drying at 105 °C for 2 h (*2.2.32*) or the water content (*2.2.13*). Taking this value into account, calculate and add to the herbal drug the quantities of ethanol of the appropriate concentration required to produce, unless otherwise prescribed, a 1 in 10 mother tincture (1:10 mother tincture) with a suitable ethanol content. Allow to macerate for at least 10 days, with sufficient shaking.

Separate the residue from the ethanol and strain under pressure if necessary. Allow the combined liquids to stand for 48 h and filter. For mother tinctures with a required assay content, adjustment may be carried out, if necessary, by adding ethanol of the same concentration as used for the preparation of the tincture.

Potentisation

The 1st decimal dilution (D1) is made from:

1 part of the mother tincture;

9 parts of ethanol of the appropriate concentration.

The 2nd decimal dilution (D2) is made from:

1 part of the 1st decimal dilution;

9 parts of ethanol of the appropriate concentration.

Subsequent decimal dilutions are produced as stated for D2, using ethanol of the appropriate concentration.

The 1st centesimal dilution (C1) is made from:

1 part of the mother tincture;

99 parts of ethanol of the appropriate concentration.

The 2nd centesimal dilution (C2) is made from:

1 part of the 1st centesimal dilution;

99 parts of ethanol of the appropriate concentration.

Subsequent centesimal dilutions are produced as stated for C2, using ethanol of the appropriate concentration.

METHOD 1.1.11 (FRENCH PHARMACOPOEIA)

Method 1.1.11 is generally used for animal matter.

Mother tinctures prepared according to Method 1.1.11 are prepared by maceration.

The mass ratio of raw material to mother tincture is usually 1 to 20. To the raw material, appropriately comminuted, add the quantity of ethanol of the appropriate concentration required to produce a 1 in 20 mother tincture. Allow to macerate for at least 10 days, with sufficient shaking. Decant and filter. Allow to stand for 48 h and filter again. For mother tinctures with a required assay content, adjustment may be carried out, if necessary, by adding ethanol of the same concentration as used for the preparation of the tincture.

Potentisation

The 1st decimal dilution (D1) is made from:

1 part of the mother tincture;

9 parts of ethanol of the appropriate concentration.

The 2nd decimal dilution (D2) is made from:

1 part of the 1st decimal dilution;

9 parts of ethanol of the appropriate concentration.

Subsequent decimal dilutions are produced as stated for D2, using ethanol of the appropriate concentration.

The 1st centesimal dilution (C1) is made from:

1 part of the mother tincture;

99 parts of ethanol of the appropriate concentration.

The 2nd centesimal dilution (C2) is made from:

1 part of the 1st centesimal dilution;

99 parts of ethanol of the appropriate concentration.

Subsequent centesimal dilutions are produced as stated for C2, using ethanol of the appropriate concentration.

2. GLYCEROL MACERATES

METHOD 2.1

Method 2.1 is used for maceration of raw materials of animal or herbal origin in glycerol (85 per cent) or glycerol/ethanol mixtures of appropriate concentration. Pathological material is excluded.

The raw materials are finely minced before use, where appropriate.

METHODS 2.1.1, 2.1.2 (EQUIVALENT TO HAB 42a AND 42b: MOTHER TINCTURES AND LIQUID DILUTIONS THEREOF)

Raw materials of animal origin - freshly killed animals or parts thereof - are used. Animals are processed immediately after being killed.

Maceration

Disperse 1 part of finely minced animal material in:

- 9 parts (decimal dilutions) or 99 parts (centesimal dilutions) of glycerol (85 per cent) for Method 2.1.1, or
- 2.1 parts of glycerol (85 per cent) for Method 2.1.2.

Allow to macerate for at least 2 h, then succuss. Filter when necessary.

Where justified, 1 part of glycerol (85 per cent) may be added to 1 part of animal material before mincing. Where very small amounts of animal material are used, the dilution may be prepared by dispersing 1 part of finely minced animal material in 99 parts of glycerol (85 per cent) (C1 or 'D2' if to be used for further decimal dilutions).

Potentisation

Method 2.1.1

The 2nd decimal dilution (D2) is made from:

1 part of the glycerol macerate D1;

9 parts of glycerol (85 per cent) or ethanol (18 per cent *V/V*) [ethanol (15 per cent *m/m*)].

Subsequent decimal dilutions are produced as stated for D2 but with ethanol (18 per cent *V/V*) [ethanol (15 per cent *m/m*)] as the vehicle.

The 2nd centesimal dilution (C2) is made from:

1 part of the glycerol macerate C1;

99 parts of ethanol (18 per cent *V/V*) [ethanol 15 per cent *m/m*)].

Subsequent centesimal dilutions are produced as stated for C2.

Method 2.1.2

The 1st 'decimal' dilution (D1) is made from:

3 parts of the glycerol macerate;

7 parts of water for injections.

The 2nd decimal dilution (D2) is made from:

1 part of D1;

9 parts of water for injections.

Subsequent decimal dilutions are produced as stated for D2.

METHOD 2.1.3 (FRENCH PHARMACOPOEIA)

Raw materials of herbal or animal origin are used.

Maceration

Comminute the raw material appropriately. Take a sample and determine the loss on drying at 105 °C for 2 h (*2.2.32*) or the water content (*2.2.13*). Taking this value into account, calculate and add to the raw material the quantity of the ethanol/glycerol mixture of the appropriate concentration to produce, unless otherwise prescribed, a 1 in 20 glycerol macerate. Allow to macerate for at least 3 weeks, with sufficient shaking. Decant and strain under pressure if necessary. Allow the combined liquids to stand for 48 h and filter.

Potentisation

The 1st decimal dilution (D1) is made from:

1 part of the glycerol macerate;

9 parts of a water/ethanol/glycerol mixture of appropriate concentration.

The 2nd decimal dilution (D2) is made from:

1 part of the 1st decimal dilution;

9 parts of a water/ethanol/glycerol mixture of appropriate concentration.

Subsequent decimal dilutions are produced as stated for D2 or using another appropriate vehicle.

The 1st centesimal dilution (C1) is made from:

1 part of the glycerol macerate;

99 parts of a water/ethanol/glycerol mixture of appropriate concentration.

The 2nd centesimal dilution (C2) is made from:

1 part of the 1st centesimal dilution;

99 parts of a water/ethanol/glycerol mixture of appropriate concentration.

Subsequent centesimal dilutions are produced as stated for C2 or using another appropriate vehicle.

METHOD 2.2

METHODS 2.2.1, 2.2.2, 2.2.3, 2.2.4 (EQUIVALENT TO HAB 41a, 41b, 41c AND 41d: GL MOTHER TINCTURES AND LIQUID DILUTIONS THEREOF)

Method 2.2 is used for maceration of raw materials of animal origin in a glycerol solution containing sodium chloride. Pathological material is excluded.

Raw materials from freshly killed animals, parts or secretions thereof are used in Methods 2.2.1, 2.2.2 and 2.2.3. Lower animals are killed with carbon dioxide in a covered vessel. All animals are processed immediately after being killed.

Blood components from live horses are used in method 2.2.4.

Sample collection and/or pre-treatment

The raw materials used in Methods 2.2.1, 2.2.2 and 2.2.3 are finely minced before use, where appropriate.

The blood used in Method 2.2.4 is collected by a veterinarian. Blood obtained from animals killed by bleeding must not be used. Take 200 mL of this blood and add 15 IU of heparin sodium and 0.625 mL of a 9 g/kg solution of sodium chloride per millilitre. Separate the blood components by fractional centrifugation and resuspend each individual cell sediment in 1.1 mL of a 9 g/kg solution of sodium chloride. These cell suspensions are processed into the glycerol macerate.

Maceration

Mix 1 part of finely minced animal material, secretions or blood cell suspensions, according to the method used, with 5 parts of a sodium chloride solution of the appropriate concentration (see Table 2371.-1) and 95 parts of glycerol. Allow to stand protected from light for at least 7 days, then decant. If necessary for Methods 2.2.1, 2.2.2 and 2.2.3, centrifuge before decanting, then filter the supernatant if necessary. The decanted liquid or the filtrate respectively is the glycerol macerate.

Any sediment present must be resuspended before processing the glycerol macerate.

Table 2371.-1

Methods 2.2.1 and 2.2.4	Method 2.2.2	Method 2.2.3
15 g/kg solution of sodium chloride in purified water	40 g/kg solution of sodium chloride in purified water	80 g/kg solution of sodium chloride in purified water

Vehicle

0.2 parts of sodium hydrogen carbonate and 8.8 parts of sodium chloride in 991 parts of water for injections or purified water as appropriate.

Potentisation

The glycerol macerate corresponds to the 2nd decimal dilution ('D2') or the 1st centesimal dilution (C1).

The 3rd decimal dilution (D3) is made from:

1 part of the 2nd decimal dilution;

9 parts of the appropriate vehicle.

Subsequent decimal dilutions are produced as stated for D3.

Where appropriate, the 4th decimal dilution (D4) is made from 1 part of the 3rd decimal dilution, 5.6 parts of the vehicle and 3.4 parts of water for injections.

The 2nd centesimal dilution (C2) is made from:

1 part of the 1st centesimal dilution;

99 parts of the appropriate vehicle.

Subsequent centesimal dilutions are produced as stated for C2.

3. LIQUID DILUTIONS

METHOD 3.1

Methods 3.1.1, 3.1.2 and 3.1.3 are used for dissolution of any suitable inorganic or organic starting material, for example minerals or venoms.

Unless otherwise specified, dissolve 1 part of the starting material in 9 parts (D1) or 99 parts (C1) of the liquid vehicle and succuss.

Where justified and authorised, in case of insufficient solubility of the starting material in the specified vehicle, directly produce the first possible dilution. For example, if the starting material is slightly soluble, dissolve 1 part of the starting material in 99 parts of the vehicle (C1 or 'D2' if to be used for further decimal dilutions).

METHODS 3.1.1, 3.1.2 (EQUIVALENT TO HAB 5a, 5b: SOLUTIONS, AQUEOUS SOLUTIONS)

Vehicles

The vehicles in Table 2371.-2 may be used.

Table 2371.-2

Method 3.1.1	Method 3.1.2
Anhydrous ethanol	Water for injections
Ethanol (96 per cent *V/V*) [ethanol (94 per cent *m/m*)]	Purified water
Ethanol (90 per cent *V/V*) [ethanol (86 per cent *m/m*)]	
Ethanol (80 per cent *V/V*) [ethanol (73 per cent *m/m*)]	
Ethanol (70 per cent *V/V*) [ethanol (62 per cent *m/m*)]	
Ethanol (50 per cent *V/V*) [ethanol (43 per cent *m/m*)]	
Ethanol (36 per cent *V/V*) [ethanol (30 per cent *m/m*)]	
Ethanol (18 per cent *V/V*) [ethanol (15 per cent *m/m*)]	
Purified water	
Glycerol (85 per cent)	

For Method 3.1.1, if ethanol (18 per cent *V/V*) [ethanol (15 per cent *m/m*)] is used, the starting material may be dissolved in 7.58 parts of purified water and the ethanol concentration adjusted by adding 1.42 parts of ethanol (96 per cent *V/V*) [ethanol (94 per cent *m/m*)] to the solution, for decimal dilutions. For centesimal dilutions, use 83.4 parts of purified water for 15.6 parts of ethanol (96 per cent *V/V*) [ethanol (94 per cent *m/m*)].

For Method 3.1.2, if the starting material is not stable and/or soluble in water, glycerol (85 per cent) may be added at a concentration of not more than 35 per cent of the vehicle, for potentisation up to D4.

Potentisation

Unless otherwise specified, the 2nd decimal dilution (D2) is made from:

1 part of the 1st decimal dilution (D1);

9 parts of ethanol (50 per cent *V/V*) [ethanol (43 per cent *m/m*)] for Method 3.1.1 or 9 parts of water for injections (or purified water, as appropriate) for Method 3.1.2.

Subsequent decimal dilutions are produced as stated for D2.

Unless otherwise specified, the 2nd centesimal dilution (C2) is made from:

1 part of the 1st centesimal dilution (C1);

99 parts of ethanol (50 per cent *V/V*) [ethanol (43 per cent *m/m*)] for Method 3.1.1 or 99 parts of water for injections (or purified water, as appropriate) for Method 3.1.2.

Subsequent centesimal dilutions are produced as stated for C2.

Additives

For Method 3.1.1, if a reaction such as precipitation is observed in the final dilution, the following additives may be used to enhance stability and/or solubility, unless otherwise specified:

– glacial acetic acid;

- concentrated hydrochloric acid;
- lactic acid;
- sodium hydroxide.

Where solutions or dilutions have been pH-adjusted, they must not be potentised further.

METHOD 3.1.3

Vehicles

Suitable vehicles, for example, ethanol of an appropriate concentration, glycerol or purified water may be used alone or combined.

Potentisation

Unless otherwise specified, the 2nd decimal dilution (D2) is made from:

1 part of the 1st decimal dilution (D1);

9 parts of the appropriate vehicle.

Subsequent decimal dilutions are produced as stated for D2.

Unless otherwise specified, the 2nd centesimal dilution (C2) is made from:

1 part of the 1st centesimal dilution (C1);

99 parts of the appropriate vehicle.

Subsequent centesimal dilutions are produced as stated for C2.

METHOD 3.2

Method 3.2 is generally used to produce liquid dilutions of triturations of substances that for the most part are sparingly soluble to practically insoluble.

METHODS 3.2.1, 3.2.2 (EQUIVALENT TO HAB 8a, 8b: LIQUID PREPARATIONS MADE FROM TRITURATIONS, AQUEOUS PREPARATIONS MADE FROM TRITURATIONS)

Preparations made according to Method 3.2.1 and Method 3.2.2 are produced from triturations D4, D5 and D6 or from triturations C4, C5 and C6, prepared according to method 4.1.1 by at least 2 potentisation steps.

Vehicles

The vehicles in Table 2371.-3 may be used.

Table 2371.-3

Method 3.2.1	Method 3.2.2
1st potentisation: Purified water 2nd potentisation: Ethanol (36 per cent *V/V*) [ethanol (30 per cent *m/m*)] Further potentisations: Ethanol (50 per cent *V/V*) [ethanol (43 per cent *m/m*)]	All potentisations: Water for injections Purified water

Potentisation

For the first liquid potentisation, dissolve 1 part of the trituration in 9 parts (decimal dilutions) or 99 parts (centesimal dilutions) of the specified vehicle (see Table 2371.-3) and succuss. For further potentisations, proceed in the same manner with 1 part of the previous dilution.

The D6, D7, C6 and C7 dilutions produced by the above method are not to be used for the preparation of further dilutions.

METHOD 3.2.3

Preparations made according to Method 3.2.3 are produced from triturations D2 onwards and from triturations C1, C2, C3 and C4, prepared according to method 4.1.2.

Vehicles

Suitable vehicles such as ethanol of an appropriate concentration or purified water may be used.

Potentisation

Unless otherwise specified, the first liquid decimal dilution (Dn-1) is made from:

1 part of the decimal trituration Dn-2;

9 parts of purified water or of another suitable vehicle in appropriate proportions.

The following decimal dilution (Dn) is made from:

1 part of the first liquid decimal dilution Dn-1;

9 parts of a suitable vehicle.

Subsequent decimal dilutions are produced as stated for Dn.

Unless otherwise specified, the first liquid centesimal dilution (Cn-1) is made from:

1 part of the centesimal trituration Cn-2;

99 parts of purified water or of another suitable vehicle in appropriate proportions.

The following centesimal dilution (Cn) is made from:

1 part of the first liquid centesimal dilution Cn-1;

99 parts of a suitable vehicle.

Subsequent centesimal dilutions are produced as stated for Cn.

4. TRITURATIONS

METHOD 4.1

Method 4.1 is used for triturations, that is solid dilutions, of raw materials or of triturations prepared according to Methods 4.2.1 or 4.2.2. The duration and intensity of the trituration are such that homogeneity and potentisation are achieved.

Vehicle

Unless otherwise specified, lactose monohydrate is used.

METHOD 4.1.1 (EQUIVALENT TO HAB 6: TRITURATIONS)

Triturations are prepared manually or mechanically. Mechanical trituration must be used for quantities exceeding 1 kg. The resulting particle size of the raw material in the first decimal or centesimal dilution does not exceed 100 µm, unless otherwise prescribed in the individual monograph.

Ratios of raw material to vehicle

Decimal triturations	Centesimal triturations
The 1st decimal trituration (D1) is made from:	The 1st centesimal trituration (C1) is made from:
1 part of the raw material	1 part of the raw material
9 parts of the vehicle	99 parts of the vehicle
Subsequent decimal triturations (Dn) are produced as stated for D1, using 1 part of the previous trituration (Dn-1).	Subsequent centesimal triturations (Cn) are produced as stated for C1, using 1 part of the previous trituration (Cn-1).

Where fresh plant material is used, the quantity of vehicle added is such so as to obtain 10 parts of the trituration (decimal trituration) or 100 parts of the trituration (centesimal trituration) from 1 part of the raw material (replace the mass of water lost from the fresh plant by an equivalent amount of the vehicle). A suitable gentle drying process may need to be applied to the solid dilution.

Where justified and authorised, it may be necessary to directly produce a C1 or 'D2' if to be used for further decimal triturations as the first solid trituration, made from 1 part of raw material and 99 parts of vehicle.

Trituration

Unless otherwise justified and authorised, the method consists of dividing the vehicle into 3 equal parts and adding the raw material to the first part, then adding the second and third part of the vehicle, thoroughly triturating after each addition.

For mechanical trituration, use a machine allowing the requirements for particle size of the first decimal or centesimal solid trituration to be met. A machine fitted with a scraping

device may be used to ensure even trituration. The time required to prepare one trituration is at least 1 h, unless otherwise justified and authorised.

For manual trituration, divide the vehicle into 3 equal parts and briefly triturate the first part in a porcelain mortar. Add the raw material, triturate the mixture for 6 min, scrape down for 4 min with an appropriate non-metallic device (for example, a porcelain spatula). Triturate for a further 6 min, scrape down again for a further 4 min, then add the second part of the vehicle and continue as above. Proceed in the same manner with the rest of the vehicle. The minimum time required for the whole process is thus 1 h. Carry out the whole process again for each subsequent solid dilution.

Triturations from D5 or C5 onwards may also be prepared by intense mechanical treatment by a suitable mixing machine as follows: add the solid trituration to one third of the vehicle and mix. Add the second third of the vehicle, mix and proceed in the same manner with the last third of the vehicle. The whole process lasts minimum 1 hour, unless otherwise justified and authorised.

In all cases, it is possible to change to a liquid medium from the 4th, 5th and 6th decimal or centesimal triturations, as described in Methods 3.2.1 and 3.2.2.

METHOD 4.1.2 (FRENCH PHARMACOPOEIA)

Trituration

Triturations are prepared as follows:

Decimal triturations

Reduce 1 part of the homoeopathic stock to a powder. Triturate carefully with a small quantity of the vehicle. Add the vehicle in small quantities until 9 parts of this vehicle have been used. The resulting trituration is the 1st decimal trituration (D1).

Triturate as described above 1 part of this trituration with 9 parts of the vehicle. The resulting trituration is the 2nd decimal trituration (D2).

In all cases, it is possible to change to a liquid medium after the 7th decimal trituration (D7) as described in Method 3.2.3.

Centesimal triturations

Proceed in the same manner but following a centesimal series.

In all cases, it is possible to change to a liquid medium after the 3rd centesimal trituration (C3) as described in Method 3.2.3.

METHOD 4.2

Method 4.2 is used for triturations, that is solid dilutions, of liquid preparations such as mother tinctures and solutions, their dilutions, mixtures and co-potentised mixtures.

Gradually impregnate the total amount of vehicle, gently dry the moist mixture, mill and sieve if necessary, then mix and triturate until homogeneity and potentisation are achieved. Trituration is further carried out as described for Method 4.1.1 or Method 4.1.2.

Vehicle

Unless otherwise specified, lactose monohydrate is used.

METHOD 4.2.1 (EQUIVALENT TO HAB 7: TRITURATIONS)

Ratios of starting material to vehicle

The quantity of vehicle added must always be such so as to obtain 10 parts of the trituration (decimal trituration) or 100 parts of the trituration (centesimal trituration) from the required number of parts of the liquid preparation (see Table 2371.-4), taking the mass of the dry residue into consideration. Where the dry residue is considered negligible, the quantity of vehicle added is 10 parts (decimal trituration) or 100 parts (centesimal trituration), for 1 part of the liquid preparation.

Table 2371.-4

Decimal triturations	Centesimal triturations
Mother tinctures prepared according to Methods 1.1.1, 1.1.3 and 1.1.4	
The 1st 'decimal' trituration (D1) is made from:	The 1st 'centesimal' trituration (C1) is made from:
2 parts of the mother tincture	2 parts of the mother tincture
maximum 10 parts of the vehicle, taking the mass of the dry residue into consideration	maximum 100 parts of the vehicle, taking the mass of the dry residue into consideration
Mother tinctures prepared according to Methods 1.1.2, 1.1.5, 1.1.6 and 1.1.7	
The 1st 'decimal' trituration (D1) is made from:	The 1st 'centesimal' trituration (C1) is made from:
3 parts of the mother tincture	3 parts of the mother tincture
maximum 10 parts of the vehicle, taking the mass of the dry residue into consideration	maximum 100 parts of the vehicle, taking the mass of the dry residue into consideration
Mother tinctures prepared according to Methods 1.1.8 and 1.1.9	
The mother tincture corresponds to the 1st decimal dilution (D1)	
The 2nd decimal trituration (D2) is made from:	The 1st 'centesimal' trituration (C1) is made from:
1 part of the mother tincture	10 parts of the mother tincture
maximum 10 parts of the vehicle, taking the mass of the dry residue into consideration	maximum 100 parts of the vehicle, taking the mass of the dry residue into consideration
Solutions prepared according to Method 3.1.1 or liquid dilutions, mixtures and co-potentised mixtures	
Decimal trituration n+1 (Dn+1) is made from:	Centesimal trituration n+1 (Cn+1) is made from:
1 part of the dilution (Dn)	1 part of the dilution (Cn)
maximum 10 parts of the vehicle, taking the mass of the dry residue into consideration	maximum 100 parts of the vehicle, taking the mass of the dry residue into consideration

METHOD 4.2.2

Ratios of starting material to vehicle

Mother tinctures prepared according to Methods 1.1.10 and 1.1.11	
The 1st decimal trituration (D1) is made from:	The 1st centesimal trituration (C1) is made from:
1 part of the mother tincture	1 part of the mother tincture
10 parts of the vehicle	100 parts of the vehicle

5. OTHER PREPARATIONS

METHOD 5.1

Method 5.1 is used for preparing homoeopathic preparations by co-potentising 2 or more stocks and/or dilutions thereof, where co-potentisation consists of mixing several stocks or dilutions of stocks then potentising them together in one or more potentisation steps.

METHODS 5.1.1, 5.1.2, 5.1.3 (EQUIVALENT TO HAB 40a, 40b, 40c: CO-POTENTISED MIXTURES)

The stocks and/or dilutions in Table 2371.-5 may be used.

Table 2371.-5

Method 5.1.1	Method 5.1.2	Method 5.1.3
Stocks	Aqueous preparations	Triturations
Solutions	Glycerol macerates and aqueous dilutions thereof	
Triturations	Triturations	
Liquid dilutions		
Mother tinctures whose method of production specifies a 1/10 (or 1/100) dilution		

Homoeopathic preparations

Vehicles

The choice of the vehicle is determined by and must comply with any special requirement for the particular stock as well as the dosage form (see table Table 2371.-6).

Table 2371.-6

Method 5.1.1	Method 5.1.2	Method 5.1.3
Ethanol (96 per cent *V/V*) [ethanol (94 per cent *m/m*)]	Water for injections	Lactose monohydrate
Ethanol (90 per cent *V/V*) [ethanol (86 per cent *m/m*)]	Purified water	
Ethanol (80 per cent *V/V*) [ethanol (73 per cent *m/m*)]	Sugar syrup (sucrose, purified water (64:36))	
Ethanol (70 per cent *V/V*) [ethanol (62 per cent *m/m*)]		
Ethanol (50 per cent *V/V*) [ethanol (43 per cent *m/m*)]		
Ethanol (36 per cent *V/V*) [ethanol (30 per cent *m/m*)]		
Ethanol (18 per cent *V/V*) [ethanol (15 per cent *m/m*)]		

For Method 5.1.1, when starting from a trituration and where justified, purified water is used for the 1st potentisation step.

For Method 5.1.2, when starting from a glycerol macerate containing sodium chloride, unless otherwise justified and authorised, the following vehicle is used: 0.2 parts of sodium hydrogen carbonate and 8.8 parts of sodium chloride in 991 parts of water for injections.

Potentisation

For each potentisation step, combine and succuss or triturate 1 part of the given mixture with 9 parts (decimal dilutions) or 99 parts (centesimal dilutions) of the appropriate vehicle.

METHOD 5.1.4

Vehicles

Ethanol of an appropriate concentration, purified water or lactose monohydrate may, for example, be used.

Potentisation

Potentisation may be performed as prescribed for Methods 5.1.1, 5.1.2 and 5.1.3, either on the last step or on several successive steps.

METHOD 5.1.5

Vehicle

Ethanol of an appropriate concentration, purified water or lactose monohydrate may, for example, be used.

Potentisation

For a co-potentisation of centesimal dilutions, each dilution (Cn-1) represents 1 per cent of the final product and the proportion of vehicle to be added is reduced by the proportion of the active substances [i.e. 100 per cent – (1 per cent × the number of active substances)]. The same procedure applies, in the appropriate proportions, when co-potentising decimal dilutions.

01/2012:2029

MOTHER TINCTURES FOR HOMOEOPATHIC PREPARATIONS

Tincturae maternae ad praeparationes homoeopathicas

DEFINITION

Mother tinctures for homoeopathic preparations are liquid preparations obtained by the solvent action of a suitable vehicle upon raw materials. The raw materials are usually in the fresh form but may be dried. Mother tinctures for homoeopathic preparations may also be obtained from plant juices, with or without the addition of a vehicle. For some preparations, the matter to be extracted may undergo a preliminary treatment.

PRODUCTION

Mother tinctures for homoeopathic preparations are prepared by maceration, digestion, infusion, decoction, fermentation or as described in the individual monographs, usually using alcohol of suitable concentration.

Mother tinctures for homoeopathic preparations are obtained using a fixed proportion of raw material to solvent, taking the moisture content of the raw material into account, unless otherwise justified and authorised.

If fresh plants are used, suitable procedures are used to ensure freshness. The competent authorities may require that the freshness is demonstrated by means of a suitable test.

Mother tinctures for homoeopathic preparations are usually clear. A slight sediment may form on standing and that is acceptable as long as the composition of the tincture is not changed significantly.

The manufacturing process is defined so that it is reproducible.

Production by maceration. Unless otherwise prescribed, reduce the matter to be extracted to pieces of suitable size, mix thoroughly and extract according to the prescribed extraction method with the prescribed extraction solvent. Allow to stand in a closed vessel for the prescribed time. The residue is separated from the extraction solvent and, if necessary, pressed out. In the latter case, the 2 liquids obtained are combined.

Adjustment of the contents. Adjustment of the content of constituents may be carried out if necessary, either by adding the extraction solvent of suitable concentration, or by adding another mother tincture for homoeopathic preparations of the vegetable or animal matter used for the preparation.

IDENTIFICATION

Where applicable, at least 1 chromatographic identification test is carried out.

TESTS

The limits in an individual monograph are set to include official methods of production. Specific limits will apply to each defined method of production.

If the test for relative density is carried out, the test for ethanol need not be carried out, and vice versa.

Relative density (*2.2.5*). The mother tincture for homoeopathic preparations complies with the limits prescribed in the monograph.

Ethanol (*2.9.10*). The ethanol content complies with that prescribed in the monograph.

Methanol and 2-propanol (*2.9.11*): maximum 0.05 per cent *V/V* of methanol and maximum 0.05 per cent *V/V* of 2-propanol, unless otherwise prescribed.

Dry residue (*2.8.16*). Where applicable, the mother tincture for homoeopathic preparations complies with the limits prescribed in the monograph.

Pesticides (*2.8.13*). Where applicable, the mother tincture for homoeopathic preparations complies with the test. This requirement is met if the herbal drug has been shown to comply with the test.

Justification is provided in cases where the test for pesticides is performed on the mother tincture, instead of on the herbal drug according to the requirements of the general monograph *Herbal drugs for homoeopathic preparations (2045)*. Limits will be set, taking into consideration the nature and the origin of the herbal drug. The dilution factor of the mother tincture and the limit of detection of the method are also taken into account when fixing these limits.

Heavy metals (*2.4.27*). Justification is provided in cases where the test for heavy metals is performed on the mother tincture, instead of on the herbal drug according to the requirements of the general monograph *Herbal drugs for homoeopathic preparations (2045)*. Limits will be set, taking into consideration the nature and the origin of the herbal drug. The dilution factor of the mother tincture and the limit of detection of the method are also taken into account when fixing these limits.

If required by the competent authority, suitable limits for the content of other heavy metals such as arsenic or nickel may be defined.

ASSAY

Where applicable, an assay with quantitative limits is performed.

STORAGE

Protected from light. A maximum storage temperature may be specified.

LABELLING

The label states:

- that the product is a mother tincture for homoeopathic preparations (designated as 'TM' or 'Ø');
- the name of the raw material using the Latin title of the European Pharmacopoeia monograph where one exists;
- the method of preparation;
- the ethanol content or other solvent content, in per cent *V/V*, in the mother tincture;
- the ratio of raw material to mother tincture;
- where applicable, the storage conditions.

04/2012:2079

HOMOEOPATHIC PILLULES, IMPREGNATED

Granula homoeopathica imbuta

DEFINITION

Preparations of solid consistency obtained from sucrose, lactose or other suitable excipients. They possess a suitable mechanical strength to resist handling without crumbling or breaking. Impregnated homoeopathic pillules are prepared by impregnation of *Pillules for homoeopathic preparations (2153)* with one or more liquid homoeopathic preparations. They are intended for sublingual or oral use.

PRODUCTION

Impregnation takes place using liquid preparations containing ethanol usually at a concentration of at least 68 per cent *V/V* (60 per cent *m/m*) in proportions of 1 mass part of liquid to 100 mass parts of pillules.

In the manufacture, packaging, storage and distribution of homoeopathic pillules, suitable measures are taken to ensure their microbiological quality; recommendations on this aspect are provided in chapter *5.1.4. Microbiological quality of non-sterile pharmaceutical preparations and substances for pharmaceutical use.*

CHARACTERS

Appearance: white, almost white or slightly coloured spheroids.

Solubility: usually freely soluble in water.

TESTS

Microbial contamination. Unless otherwise justified, authorised and labelled, the pillules are intended for sublingual administration and the following acceptance criteria apply.

TAMC: acceptance criterion 10^2 CFU/g (*2.6.12*).

TYMC: acceptance criterion 10^1 CFU/g (*2.6.12*).

Absence of *Staphylococcus aureus* (*2.6.13*).

Absence of *Pseudomonas aeruginosa* (*2.6.13*).

04/2012:2153

PILLULES FOR HOMOEOPATHIC PREPARATIONS

Granula ad praeparationes homoeopathicas

DEFINITION

Preparations of solid consistency obtained from sucrose, lactose or other suitable excipients. They possess a suitable mechanical strength to resist handling without crumbling or breaking. They are intended for impregnation or coating with one or more homoeopathic preparations. The impregnated pillules comply with the requirements of the monograph *Homoeopathic pillules, impregnated (2079)*.

PRODUCTION

In the manufacture, packaging, storage and distribution of pillules for homoeopathic preparations, suitable measures are taken to ensure their microbiological quality; recommendations on this aspect are provided in chapter *5.1.4. Microbiological quality of non-sterile pharmaceutical preparations and substances for pharmaceutical use.*

If a system of sizing is used, the indications in Table 2153.-1 are used.

Table 2153.-1. – *Classification of pillules according to their mass and size*

Category	Number of pillules for homoeopathic preparations	Mass (g)	Fineness (µm)
1	470 - 530	1.0	1000 - 1600
2	160 - 333	1.0	1400 - 2000
3	110 - 130	1.0	1800 - 2500
4	70 - 90	1.0	2000 - 2800
5	40 - 50	1.0	2500 - 3350
6	16 - 30	1.0	3150 - 4500
7	10	0.9 - 1.1	4000 - 5600
8	5	0.9 - 1.1	5600 - 6700
9	3	0.9 - 1.1	7100 - 8000
10	2	0.9 - 1.1	8000 - 9500

NOTE: for categories 7-10, the mass is obtained by weighing the specified number of pillules.

CHARACTERS

Appearance: white or almost white spheroids.

Solubility: usually freely soluble in water.

IDENTIFICATION

The excipients used for the manufacture of pillules for homoeopathic preparations are identified by one or more suitable test(s).

TESTS

If the test for fineness is carried out, the test for uniformity of mass need not be carried out, and vice versa.

Uniformity of mass. Carry out the test using 20 pillules to constitute 1 unit. Weigh individually 20 units taken at random and determine the individual and average masses. Not more than 2 of the individual masses deviate from the average mass by more than 10 per cent and none deviate by more than 20 per cent.

Fineness (*2.9.35*): not less than 90 per cent *m/m* of the pillules are between the lower and upper limits of the corresponding category as indicated in Table 2153.-1.

Impregnation. Use an approved method. The average for the results is within a validated range.

Microbial contamination

TAMC: acceptance criterion 10^2 CFU/g (*2.6.12*).

TYMC: acceptance criterion 10^1 CFU/g (*2.6.12*).

Absence of *Staphylococcus aureus* (*2.6.13*).

Absence of *Pseudomonas aeruginosa* (*2.6.13*).

LABELLING

The label states:

- the composition of the pillules;
- where applicable, the size of the pillules.

01/2013:2486

ANAMIRTA COCCULUS FOR HOMOEOPATHIC PREPARATIONS

Anamirta cocculus ad praeparationes homoeopathicas

DEFINITION

Dried, ripe fruit of *Anamirta paniculata* Colebr. (*A. cocculus* Wight et Arn.).

Content: minimum 0.80 per cent of picrotoxinin ($C_{15}H_{16}O_6$; M_r 292.3) (dried drug).

IDENTIFICATION

First identification: A, B, D.

Second identification: A, B, C.

A. The fruits are dark greyish-brown or black, reniform sub-spherical, about 6-10 mm in diameter and 9-12 mm long; the outer surface is irregularly wrinkled with a ridge about 4-6 mm long running between the pale, circular scar left by the stalk and a small beak of the remains of the stigma. The pericarp is hard, about 1 mm thick and the inner surface is brownish-grey, hard and woody. Cut transversely, the fruit shows a single, cup-shaped seed into the hollow of which an ingrowth of the mesocarp and endocarp projects. Cut longitudinally, the endosperm shows the presence of 2 narrow cavities in each of which is enclosed 1 of the foliaceous cotyledons.

B. Microscopic examination (*2.8.23*). The powder (710) is brown. Examine under a microscope using *chloral hydrate solution R*. The powder shows brownish, thin-walled, elongated cells with brown granular contents; rather large vascular bundles; very thick lignified fibres; sclereids; large, thin-walled, cubic or polygonal cells containing fatty oil and large protein granules; cells containing small needle-shaped crystals and, in the largest cavities, prism crystals.

C. Thin-layer chromatography (*2.2.27*).

Test solution. To 2.00 g of the powdered herbal drug (710) (*2.9.12*) add 20 mL of *ethanol (90 per cent V/V) R*, shake for 2 h and then centrifuge (1000 *g*). Use the supernatant.

Reference solution. Dissolve 10 mg of *picrotin CRS* and 10 mg of *picrotoxinin CRS* in *ethanol (96 per cent) R* and dilute to 10 mL with the same solvent.

Plate: *TLC silica gel plate R* (5-40 µm) [or *TLC silica gel plate R* (2-10 µm)].

Mobile phase: *methanol R*, *ethyl acetate R*, *heptane R* (10:40:50 *V/V/V*).

Application: 40 µL [or 10 µL], as bands of 20 mm [or 10 mm].

Development: over a path of 10 cm [or 6 cm].

Drying: in air.

Detection: spray with *anisaldehyde solution R*, heat at 100-105 °C for 5-10 min and examine in daylight within 5-10 min.

Results: see below the sequence of zones present in the chromatograms obtained with the reference solution and the test solution. Above the zone due to picrotoxinin, several pink or violet zones may also be visible in the chromatogram obtained with the test solution.

Top of the plate	
Picrotoxinin: a blue zone	A blue zone (picrotoxinin)
Picrotin: a blue zone	A blue zone (picrotin)
Reference solution	**Test solution**

D. Examine the chromatograms obtained in the assay.

Results: the peaks due to picrotoxinin and picrotin in the chromatogram obtained with the test solution are similar in retention time to the corresponding peaks in the chromatogram obtained with the reference solution.

TESTS

Loss on drying (*2.2.32*): maximum 10.0 per cent, determined on 1.000 g of the powdered drug (710) (*2.9.12*) by drying in an oven at 105 °C for 2 h.

Total ash (*2.4.16*): maximum 6.0 per cent.

ASSAY

Liquid chromatography (*2.2.29*).

Test solution. To 2.00 g of the powdered drug (710) (*2.9.12*) add 20.0 mL of *ethanol (90 per cent V/V) R*, shake for 2 h and then centrifuge at 1000 *g* for 5 min. Dilute 2.0 mL of the supernatant to 20.0 mL with the mobile phase and filter through a membrane filter (nominal pore size 0.45 µm).

Reference solution. Dissolve 5.0 mg of *picrotin CRS* and 5.0 mg of *picrotoxinin CRS* in 10.0 mL of *acetonitrile R*. Dilute 2.0 mL of the solution to 20.0 mL with the mobile phase.

Column:

- *size*: *l* = 0.125 m, Ø = 4.0 mm;
- *stationary phase*: *octadecylsilyl silica gel for chromatography R* (5 µm).

Mobile phase: *acetonitrile for chromatography R*, *water R* (30:70 *V/V*).

Flow rate: 0.5 mL/min.

Detection: spectrophotometer at 200 nm.

Injection: 10 µL.

Run time: twice the retention time of *picrotoxinin CRS*.

Retention time: picrotin = about 6 min; picrotoxinin = about 10 min.

System suitability: reference solution:

- *resolution*: minimum 2.0 between the peaks due to picrotin and picrotoxinin.

Calculate the percentage content of picrotoxinin using the following expression:

$$\frac{A_1 \times m_2 \times p \times 2}{A_2 \times m_1}$$

A_1 = area of the peak due to picrotoxinin in the chromatogram obtained with the test solution;

A_2 = area of the peak due to picrotoxinin in the chromatogram obtained with the reference solution;

m_1 = mass of the herbal drug to be examined to prepare the test solution, in grams;

m_2 = mass of *picrotoxinin CRS* used to prepare the reference solution, in grams;

p = assigned percentage content of picrotoxinin in *picrotoxinin CRS*.

Mother tincture

The mother tincture complies with the requirements of the general monograph *Mother tinctures for homeopathic preparations (2029)*.

DEFINITION

Content: 0.07 per cent *m/m* to 0.15 per cent *m/m* of picrotoxinin ($C_{15}H_{16}O_6$).

PRODUCTION

The mother tincture is prepared from the dried, ripe fruit of *A. paniculata Colebr.* according to the following methods prescribed in the monograph *Methods of preparation of homoeopathic stocks and potentisation (2371)*:

- method 1.1.8 using the powdered herbal drug (710) (*2.9.12*) and *ethanol (90 per cent V/V) R*; use *ethanol (70 per cent V/V) R* to prepare the 4th decimal dilution and *ethanol (50 per cent V/V) R* for subsequent dilutions;
- method 1.1.10 using the crushed drug in fragments of about 2-3 mm, *ethanol (90 per cent V/V) R* and a maceration time of about 3 weeks.

CHARACTERS

Appearance: yellow or dark yellow liquid.

IDENTIFICATION

A. Thin-layer chromatography (*2.2.27*) as described in identification test C of the herbal drug with the following modification.

Test solution. The mother tincture to be examined.

B. Examine the chromatograms obtained in the assay.

Results: the peaks due to picrotoxinin and picrotin in the chromatogram obtained with the test solution are similar in retention time to the corresponding peaks in the chromatogram obtained with the reference solution.

TESTS

Relative density (*2.2.5*): 0.830 to 0.845 (method 1.1.8).

Ethanol (*2.9.10*): 85 per cent *V/V* to 95 per cent *V/V* (method 1.1.10).

Dry residue (*2.8.16*): minimum 0.7 per cent.

ASSAY

Liquid chromatography (*2.2.29*) as described in the assay for the herbal drug with the following modification.

Test solution. Dilute 0.500 g of the mother tincture to be examined to 10.0 mL with the mobile phase and filter using a membrane filtre (nominal pore size 0.45 µm).

Calculate the percentage content of picrotoxinin using the following expression:

$$\frac{A_1 \times m_2 \times p}{A_2 \times m_1 \times 10}$$

A_1 = area of the peak due to picrotoxinin in the chromatogram obtained with the test solution;

A_2 = area of the peak due to picrotoxinin in the chromatogram obtained with the reference solution;

m_1 = mass of the mother tincture to be examined used to prepare the test solution, in grams;

m_2 = mass of *picrotoxinin CRS* used to prepare the reference solution, in grams;

p = assigned percentage content of picrotoxinin in *picrotoxinin CRS*.

01/2008:1599

ARSENIOUS TRIOXIDE FOR HOMOEOPATHIC PREPARATIONS

Arsenii trioxidum ad praeparationes homoeopathicas

As_2O_3 M_r 197.8
[1327-53-3]

DEFINITION

Content: 99.5 per cent to 100.5 per cent of As_2O_3.

CHARACTERS

Appearance: white or almost white powder.

Solubility: practically insoluble to sparingly soluble in water. It dissolves in solutions of alkali hydroxides and carbonates.

IDENTIFICATION

A. Dissolve 20 mg in 1 mL of *dilute hydrochloric acid R*, add 4 mL of *water R* and 0.1 mL of *sodium sulfide solution R*. The resulting yellow precipitate is soluble in *dilute ammonia R1*.

B. Dissolve 20 mg in 1 mL of *hydrochloric acid R1*, add 5 mL of *hypophosphorous reagent R* and heat for 15 min on a water-bath. A black precipitate develops.

TESTS

Appearance of solution. A 100 g/L solution in *dilute ammonia R1* is clear (*2.2.1*) and colourless (*2.2.2, Method II*).

Sulfides. Dissolve 1.0 g in 10.0 mL of *dilute sodium hydroxide solution R*. Add 0.05 mL of *lead acetate solution R*. Any colour in the test solution is not more intense than that in a standard prepared at the same time and in the same manner using a mixture of 10.0 mL of a 0.015 g/L solution of *sodium sulfide R* in *dilute sodium hydroxide solution R* and 0.05 mL of *lead acetate solution R* (20 ppm).

ASSAY

Dissolve 40.0 mg in a mixture of 10 mL of *water R* and 10 mL of *dilute sodium hydroxide solution R*. Add 10 mL of *dilute hydrochloric acid R* and 3 g of *sodium hydrogen carbonate R* and mix. Add 1 mL of *starch solution R* and titrate with *0.05 M iodine*.

1 mL of *0.05 M iodine* is equivalent to 4.946 mg of As_2O_3.

01/2008:2142

BARIUM CHLORIDE DIHYDRATE FOR HOMOEOPATHIC PREPARATIONS

Barii chloridum dihydricum ad praeparationes homoeopathicas

$BaCl_2,2H_2O$ M_r 244.3
[10326-27-9]

DEFINITION

Content: 99.0 per cent to 101.0 per cent of $BaCl_2,2H_2O$.

CHARACTERS

Appearance: white or almost white, crystalline powder or colourless crystals.

Solubility: freely soluble in water, very slightly soluble or practically insoluble in ethanol (96 per cent).

IDENTIFICATION

A. Dissolve 0.1 g in 1 mL of *water R*. Add 0.3 mL of *dilute sulfuric acid R*. A white precipitate is formed; it is insoluble in *dilute hydrochloric acid R* and in *dilute nitric acid R*.

B. It gives reaction (a) of chlorides (*2.3.1*).

TESTS

Solution S. Dissolve 10.0 g in *water R* and dilute to 100 mL with the same solvent.

Appearance of solution. Solution S is clear (*2.2.1*) and colourless (*2.2.2, Method II*).

Acidity or alkalinity. To 10 mL of solution S add 0.1 mL of *phenolphthalein solution R*. Not more than 0.2 mL of *0.01 M hydrochloric acid* or *0.01 M sodium hydroxide* is required to change the colour of the indicator.

Heavy metals (*2.4.8*): maximum 10 ppm.

12 mL of solution S complies with limit test A. Prepare the reference solution using *lead standard solution (1 ppm Pb) R*.

ASSAY

Dissolve 0.200 g in 100 mL of *water R*. Add 100 mL of *methanol R*, 10 mL of *concentrated ammonia R* and 2 mg of *phthalein purple R*. Titrate with *0.1 M sodium edetate* until the colour changes from violet to colourless.

1 mL of *0.1 M sodium edetate* is equivalent to 24.43 mg of $BaCl_2,2H_2O$.

01/2008:2143
corrected 6.0

CADMIUM SULFATE HYDRATE FOR HOMOEOPATHIC PREPARATIONS

Cadmii sulfas hydricus ad praeparationes homoeopathicas

$CdSO_4,8/3H_2O$ M_r 256.5

DEFINITION

Content: 98.0 per cent to 102.0 per cent (anhydrous substance).

CHARACTERS

Appearance: white or almost white, crystalline powder.

Solubility: freely soluble in water, practically insoluble in ethanol (96 per cent).

IDENTIFICATION

A. It gives reaction (a) of sulfates (*2.3.1*).

B. To 2 mL of solution S (see Tests) add 2 mL of *sodium sulfide solution R*. A yellow precipitate is formed.

TESTS

Solution S. Dissolve 5.0 g in *carbon dioxide-free water R* and dilute to 50 mL with the same solvent.

Appearance of solution. Solution S is clear (*2.2.1*) and colourless (*2.2.2, Method II*).

Acidity or alkalinity. To 10 mL of solution S add 0.3 mL of *methyl orange solution R*. Not more than 0.5 mL of *0.01 M hydrochloric acid* or *0.01 M sodium hydroxide* is required to change the colour of the indicator.

Nitrates: maximum 100 ppm.

Dissolve 1.0 g in *water R* and dilute to 20.0 mL with the same solvent. To 1.0 mL of this solution add 0.2 mL of a 10 g/L solution of *sulfanilic acid R* in *acetic acid R* and 0.2 mL of a recently prepared 3 g/L solution of *naphthylamine R* in *acetic acid R*. Add a turning of *zinc R*. A pink colour is produced within 5 min. It is not more intense than that of a mixture of 0.5 mL of *nitrate standard solution (10 ppm NO_3) R* and 0.5 mL of *water R*, prepared at the same time.

Zinc sulfate, alkaline-earth sulfates, rare-earth sulfates. Dissolve 1.0 g in 17 mL of *water R*. Add 0.5 mL of *hydrochloric acid R* and 1 g of *thioacetamide R*. Heat in a water-bath for 10 min. Dilute to 20.0 mL with *water R* and filter. Evaporate 10.0 mL of this solution to dryness in an oven. Ignite the residue at about 800 ± 50 °C to constant mass. The residue weighs a maximum of 2 mg.

Arsenic (*2.4.2, Method A*): maximum 2 ppm, determined on 5 mL of solution S.

Water (*2.5.12*): 16.0 per cent to 20.0 per cent, determined on 80 mg. Shake for 10 min before carrying out the determination.

ASSAY

Dissolve 0.200 g in 50 mL of *water R*. Add 10 mL of *ammonium chloride buffer solution pH 10.0 R* and 50 mg of *mordant black 11 triturate R1*. Titrate with *0.1 M sodium edetate* until the colour changes from red to green.

1 mL of *0.1 M sodium edetate* is equivalent to 20.85 mg of $CdSO_4$.

01/2008:2144

CALCIUM IODIDE TETRAHYDRATE FOR HOMOEOPATHIC PREPARATIONS

Calcii iodidum tetrahydricum ad praeparationes homoeopathicas

$CaI_2,4H_2O$ M_r 366.0
[13640-62-5]

DEFINITION

Content: 97.0 per cent to 102.0 per cent of CaI_2 (anhydrous substance).

CHARACTERS

Appearance: white or almost white powder, very hygroscopic.

Solubility: very soluble to freely soluble in water and in ethanol (96 per cent).

IDENTIFICATION

A. Solution S (see Tests) gives reaction (a) of calcium (*2.3.1*).

B. Solution S (see Tests) gives reaction (b) of iodides (*2.3.1*).

TESTS

Solution S. Dissolve 10.0 g in *distilled water R* and dilute to 100.0 mL with the same solvent.

Appearance of solution. Solution S is clear (*2.2.1*) and not more intensely coloured than reference solution GY_5 (*2.2.2, Method II*).

Free iodine, iodates. To 5 mL of solution S add 2 mL of *methylene chloride R*. Shake and allow to stand. The organic layer is colourless (*2.2.2, Method I*) (free iodine). Add 0.2 mL of *dilute sulfuric acid R*. Shake and allow to stand. The organic layer remains colourless (*2.2.2, Method I*) (iodates).

Sulfates (*2.4.13*): maximum 150 ppm.

Dilute 10 mL of solution S to 15 mL with *distilled water R*.

Iron (*2.4.9*): maximum 10 ppm, determined on 10 mL of solution S.

Heavy metals (*2.4.8*): maximum 10 ppm.

12 mL of solution S complies with limit test A. Prepare the reference solution using *lead standard solution (1 ppm Pb) R*.

Water (*2.5.12*): 18.0 per cent to 22.0 per cent, determined on 0.100 g.

ASSAY

Dissolve 0.300 g in 50 mL of *water R*. Add 5 mL of *dilute nitric acid R* and 25.0 mL of *0.1 M silver nitrate*. Shake. Add 2 mL of *ferric ammonium sulfate solution R2* and titrate with *0.1 M ammonium thiocyanate* until the colour changes to reddish-yellow.

1 mL of *0.1 M silver nitrate* is equivalent to 14.70 mg of CaI_2.

STORAGE

In an airtight container.

01/2008:2030
corrected 6.0

COMMON STINGING NETTLE FOR HOMOEOPATHIC PREPARATIONS

Urtica dioica ad praeparationes homoeopathicas

DEFINITION

Whole, fresh, flowering plant of *Urtica dioica* L.

CHARACTERS

The plant causes an itching, burning sensation on the skin.

IDENTIFICATION

A. Common stinging nettle is perennial. The taproot sends out creeping subterranean rhizomes, more or less 4-angled in transverse section, from which extend adventious secondary roots and very numerous brownish hairy rootlets. The stipes are erect, generally unbranched, 3-5 mm in diameter and 0.3-1.5 m high, rarely up to 2.5 m high, 4-angled, greyish-green and covered in short hairs and stinging hairs.

   The decussate leaves are 30-150 mm long and 20-80 mm wide. The petiole is hispid and usually slightly less than one-third the length of the lamina. The leaf blade is ovate, acuminate, cordate or rounded at the base, and coarsely dentate; the apical tooth is distinctly larger than the lateral teeth. The upper side of the leaves is dark green and usually matt, both sides bear short serried hairs intermingled with long stinging hairs. The 2 stipules are linear-subulate and free. The inflorescences growing from the leaf axils are complex, the flowers unisexual, and, particularly in male plants, generally distinctly longer than the petiole. After shedding their pollen, male inflorescences are erect at an oblique angle or horizontal; female inflorescences are pendent when the fruit is ripe. All flowers have long stalks. The perianth of the male flowers is divided half-way down into equal green lobes, widest at their base, with short bristles and stinging hairs at the margins. The stamens are equal and opposite to the perianth segments, each with a long, whitish filament that curves inwards before pollen is shed and spreads out afterwards. The ovary is rudimentary, button or cup-shaped. The perianth of the female flowers is downy or bristly on the outside and consists of outer, and 2 inner segments; the inner segments are about twice the length of the outer ones. The hypogynous, ovate, unilocular ovary bears a large capitate stigma with a brush-like shock of hair. As the one-seeded fruit grows ripe, the 2 inner segments of the perianth fold around it like wings.

B. It complies with the test for *Urtica urens* (see Tests).

TESTS

Urtica urens. The margin of the lamina is not serrate with teeth twice as long as wide. The clusters of flowers in the axils are longer than the petiole of the leaf. Unisexual, apetalous flowers are not together on the same plant and in the same cluster.

Foreign matter (*2.8.2*): maximum 5 per cent.

Loss on drying (*2.2.32*): minimum 65.0 per cent, determined on 5.0 g of finely cut drug by drying in an oven at 105 °C for 2 h, if performed to demonstrate the freshness of the drug.

Mother tincture

The mother tincture complies with the requirements of the general monograph *Mother tinctures for homoeopathic preparations (2029)*.

PRODUCTION

The mother tincture of *Urtica dioica* L. is prepared by maceration using alcohol of a suitable concentration.

CHARACTERS

Appearance: greenish-brown or orange-brown liquid.

IDENTIFICATION

Thin-layer chromatography (*2.2.27*).

Test solution. The mother tincture to be examined.

Reference solution. Dissolve 10 mg of *phenylalanine R* and 10 mg of *serine R* in a mixture of equal volumes of *methanol R* and *water R* and dilute to 10 mL with the same mixture of solvents.

Plate: *TLC silica gel plate R*.

Mobile phase: *glacial acetic acid R*, *water R*, *acetone R*, *butanol R* (10:20:35:35 *V/V/V/V*).

Application: 20 µL, as bands.

Development: over a path of 10 cm.

Drying: in air.

Detection: spray with a 1 g/L solution of *ninhydrin R* in *alcohol R*. Heat the plate at 105-110 °C for 5-10 min then examine in daylight within 10 min.

Results: see below the sequence of the zones present in the chromatograms obtained with the reference solution and the test solution.

Top of the plate	
———	———
Phenylalanine: a violet to reddish-brown zone	4 red to violet zones
———	———
Serine: a reddish-violet zone	A violet zone A violet zone
Reference solution	**Test solution**

TESTS

Relative density (*2.2.5*): 0.930 to 0.950.

Ethanol (*2.9.10*): 40 per cent *V/V* to 56 per cent *V/V*.

Methanol (*2.9.11*): maximum 0.10 per cent *V/V*.

Dry residue (*2.8.16*): minimum 1.1 per cent.

01/2008:2146
corrected 6.0

COPPER ACETATE MONOHYDRATE FOR HOMOEOPATHIC PREPARATIONS

Cupri acetas monohydricus ad praeparationes homoeopathicas

$Cu(C_2H_3O_2)_2,H_2O$ M_r 199.7
[6046-93-1]

DEFINITION

Content: 99.0 per cent to 101.0 per cent of $Cu(C_2H_3O_2)_2,H_2O$.

CHARACTERS

Appearance: greenish-blue crystals or green powder.

Solubility: soluble in water, slightly soluble or very slightly soluble in ethanol (96 per cent).

IDENTIFICATION

A. It gives reaction (a) of acetates (*2.3.1*).

B. Dissolve 0.1 g in 10 mL of *water R* and add *dilute ammonia R1* dropwise. A dark blue colour is produced.

TESTS

Solution S. Dissolve 3.0 g in a mixture of 40 mL of *distilled water R* and 0.6 mL of *glacial acetic acid R*, with heating at 70 °C. Cool and dilute to 45 mL with *distilled water R*.

Appearance of solution. Solution S is clear (*2.2.1*).

Impurities not precipitating with hydrogen sulfide: maximum 0.1 per cent, calculated as sulfates.

To 2.000 g add 92 mL of *water R* and 8.0 mL of *dilute sulfuric acid R*. Heat to 70 °C. Pass a current of *hydrogen sulfide R* until there is no longer precipitation of copper sulfide. Allow to cool and stand, then filter. Evaporate to dryness 50.0 mL of the filtrate in a crucible. Ignite the residue at about 600 ± 50 °C to constant mass.

Chlorides (*2.4.4*): maximum 50 ppm, determined on solution S.

Sulfates (*2.4.13*): maximum 150 ppm, determined on solution S.

Iron (*2.4.9*): maximum 20 ppm.

Dissolve 0.500 g in 10 mL of *water R*. Transfer to a separating funnel. Add 20 mL of *hydrochloric acid R1* and 10 mL of *methyl isobutyl ketone R*. Shake vigorously for 3 min. Allow to stand. Transfer the organic layer to a second separating funnel and add 10 mL of *water R*. Shake vigorously for 3 min. Allow to stand. The aqueous layer complies with the limit test for iron.

Nickel: maximum 10 ppm.

To the residue obtained in the test for impurities not precipitating with hydrogen sulfide, add 2.0 mL of *hydrochloric acid R* and 1.0 mL of *sulfuric acid R*. Evaporate to dryness. Dissolve the residue in a mixture of 3.0 mL of *dilute sulfuric acid R* and 17.0 mL of *water R*. To 4.0 mL of this solution add 4.0 mL of *water R*, 5.0 mL of *bromine water R*, 7.0 mL of *dilute ammonia R1* and 3.0 mL of a 10 g/L solution of *dimethylglyoxime R* in *ethanol (90 per cent V/V) R*. This solution is not more intensely coloured within 1 min than a solution prepared as follows: mix 4.0 mL of a 1 ppm solution of nickel (Ni) prepared from *nickel standard solution (10 ppm Ni) R*, 4.0 mL of *water R* and 5.0 mL of *bromine water R*; carefully add 7.0 mL of *dilute ammonia R1* and 3.0 mL of a 10 g/L solution of *dimethylglyoxime R* in *ethanol (90 per cent V/V) R*.

ASSAY

Dissolve 0.400 g in *water R* and dilute to 50 mL with the same solvent. Add 6.0 mL of *glacial acetic acid R*, 10.0 g of *potassium iodide R* and 1 mL of *starch solution R*. Titrate with *0.1 M sodium thiosulfate*.

1 mL of *0.1 M sodium thiosulfate* is equivalent to 19.97 mg of $Cu(C_2H_3O_2)_2,H_2O$.

01/2008:1610
corrected 7.0

COPPER FOR HOMOEOPATHIC PREPARATIONS

Cuprum ad praeparationes homoeopathicas

Cu A_r 63.5
[7440-50-8]

DEFINITION

Content: 99.0 per cent to 101.0 per cent of Cu.

CHARACTERS

Appearance: reddish-brown powder.

Solubility: practically insoluble in water, soluble in hydrochloric acid and in nitric acid, practically insoluble in ethanol (96 per cent).

IDENTIFICATION

A. To 2 mL of solution S (see Tests) add 0.5 mL of *potassium ferrocyanide solution R*. A reddish-brown precipitate is formed.

B. To 5 mL of solution S add 0.6 mL of *ammonia R*. A blue precipitate is formed. Add 2 mL of *ammonia R*. The precipitate disappears; the solution has an intense blue colour.

TESTS

Solution S. Dissolve 2.0 g in 10 mL of *nitric acid R*. After nitrous fumes are no longer evolved, dilute to 60 mL with *distilled water R*.

Acidity or alkalinity. To 5.0 g add 20 mL of *carbon dioxide-free water R*. Boil for 1 min. Cool. Filter and dilute to 25.0 mL with *carbon dioxide-free water R*. To 10 mL of the solution add 0.1 mL of *bromothymol blue solution R1*. Not more than 0.5 mL of *0.01 M hydrochloric acid* or *0.01 M sodium hydroxide* is required to change the colour of the indicator.

Chlorides (*2.4.4*): maximum 100 ppm, determined on solution S.

Sulfates (*2.4.13*): maximum 300 ppm, determined on solution S.

Iron: maximum 50 ppm.

Atomic absorption spectrometry (*2.2.23, Method I*).

Test solution. Dissolve 1.00 g in 5 mL of *nitric acid R* and dilute to 50.0 mL with *water R*.

Reference solutions. Prepare the reference solutions using *iron standard solution (20 ppm Fe) R*, diluted as necessary with a 1 per cent *V/V* solution of *nitric acid R*.

Source: iron hollow-cathode lamp.

Wavelength: 248.3 nm.

Flame: air-acetylene.

Lead: maximum 100 ppm.

Atomic absorption spectrometry (*2.2.23, Method I*).

Test solution. Use the test solution prepared for the test for iron.

Reference solutions. Prepare the reference solutions using *lead standard solution (0.1 per cent Pb) R*, diluted as necessary with a 1 per cent *V/V* solution of *nitric acid R*.

Source: lead hollow-cathode lamp.

Wavelength: 283.3 nm.

Flame: air-acetylene.

Zinc: maximum 50 ppm.

Atomic absorption spectrometry (*2.2.23, Method I*).

Test solution. Use the test solution prepared for the test for iron.

Reference solutions. Prepare the reference solutions using *zinc standard solution (100 ppm Zn) R*, diluted as necessary with a 1 per cent *V/V* solution of *nitric acid R*.

Source: zinc hollow-cathode lamp.

Wavelength: 213.9 nm.

Flame: air-acetylene.

ASSAY

Dissolve 0.100 g in 5 mL of *nitric acid R*. Heat to expel the nitrous fumes. Add 200 mL of *water R* and neutralise (*2.2.3*) with *dilute ammonia R1*. Add 1 g of *ammonium chloride R* and 3 mg of *murexide R*. Titrate with *0.1 M sodium edetate* until the colour changes from green to violet.

1 mL of *0.1 M sodium edetate* is equivalent to 6.354 mg of Cu.

01/2008:2023

GARLIC FOR HOMOEOPATHIC PREPARATIONS

Allium sativum ad praeparationes homoeopathicas

DEFINITION

Fresh bulb of *Allium sativum* L.

CHARACTERS

It has a characteristic odour after cutting.

IDENTIFICATION

The bulb is generally 3 cm to 5 cm broad and almost spherical; the flat base bears the remnants of numerous short greyish-brown adventitious roots. The bulb consists of about 10 daughter bulbs (cloves) arranged roughly in a circle around a central axis. Individual daughter bulbs are 1 cm to 3 cm long, laterally compressed and convex on the dorsal side. Each daughter bulb has a tough, white or reddish skin around a fleshy tubular leaf, investing a more or less rounded elongated cone of leaf primordia and vegetative apex.

TESTS

Water (*2.2.13*): minimum 55.0 per cent, determined on 10.0 g of the finely cut drug, if performed to demonstrate the freshness of the drug.

Mother tincture

The mother tincture complies with the requirements of the general monograph *Mother tinctures for homoeopathic preparations (2029)*.

PRODUCTION

The mother tincture of *Allium sativum* L. is prepared by maceration of the cut drug using alcohol of a suitable concentration.

CHARACTERS

Appearance: brownish-yellow liquid.

It has a peculiar and unpleasant aromatic odour.

IDENTIFICATION

A. To 2 mL of the mother tincture to be examined, add 0.2 mL of *dilute sodium hydroxide solution R*. A yellowish-white precipitate develops.

B. Thin-layer chromatography (*2.2.27*).

Test solution. Extract 5 mL of the mother tincture to be examined with 2 quantities, each of 10 mL, of *ether R*. Combine the ether layers and dry over *anhydrous sodium sulfate R*. Filter and evaporate the filtrate in a water-bath at low temperature. Dissolve the residue in 0.4 mL of *methanol R*.

Reference solution. Dissolve 10 mg of *resorcinol R*, 10 mg of *thymol R* and 30 mg of *gallic acid R* in 10 mL of *methanol R*.

Plate: *TLC silica gel F_{254} plate R*.

Mobile phase: *anhydrous formic acid R*, *toluene R*, *di-isopropyl ether R* (10:40:50 *V/V/V*).

Application: 40 µL of the test solution and 10 µL of the reference solution.

Development: over a path of 10 cm.

Drying: in air.

Detection: examine in ultraviolet light at 254 nm and identify gallic acid; spray with *anisaldehyde solution R*, heat to 105-110 °C for 5-10 min. Examine in daylight within 10 min.

Results: see below the sequence of the zones present in the chromatograms obtained with the reference solution and the test solution. Other zones may also be visible in the chromatogram obtained with the test solution.

Top of the plate	
Thymol: an orange-red zone	An intense reddish-violet zone
	An intense reddish-violet zone
	A violet zone
	A yellowish or greenish zone
Resorcinol: an intense orange-red zone	
Gallic acid: a yellow zone (UV at 254 nm: a fluorescent quenching zone)	A violet zone
	A greenish-yellow zone
	A violet zone may be present
Reference solution	**Test solution**

Homoeopathic preparations

TESTS

Relative density (*2.2.5*): 0.885 to 0.960.

Ethanol (*2.9.10*): 50 per cent *V/V* to 70 per cent *V/V*.

Dry residue (*2.8.16*): minimum 4.0 per cent.

STORAGE

In an airtight container.

01/2008:2092
corrected 6.8

HEDERA HELIX FOR HOMOEOPATHIC PREPARATIONS

Hedera helix ad praeparationes homoeopathicas

DEFINITION

Fresh, young, fully developed but not yet lignified branch of *Hedera helix* L., harvested immediately before or at the beginning of flowering.

IDENTIFICATION

The fresh, young branches of *Hedera helix* L. are thin and flexible, climbing; they cling to their support by stem-roots. The leaves are alternate, simple and petiolate. The petiole shows a cylindrical section. The upper surface of the leaves is glabrous and shiny, darker than the lower surface. The lamina is usually divided into 3-5 more or less deeply cut lobes on sterile branches; it is oval, with a pointed apex on fertile branches. The inflorescences are arranged in a simple semi-globular corymb and grouped in terminal clusters. The pedicels of the umbel are covered in whitish hairs. Each flower shows 5 small teeth formed by the upper part of the sepals and 5 petals covered in very small inverted hairs.

TESTS

Foreign matter (*2.8.2*): if required by the competent authority, maximum 5 per cent.

Loss on drying (*2.2.32*): if required by the competent authority, minimum 50 per cent, determined on 5.0 g of the finely cut drug by drying in an oven at 105 °C for 2 h.

Mother tincture

The mother tincture complies with the requirements of the general monograph *Mother tinctures for homoeopathic preparations (2029)*.

PRODUCTION

The mother tincture of *Hedera helix* L. is prepared by maceration using ethanol of a suitable concentration.

Content: minimum 0.15 per cent *m/m* of hederacoside C ($C_{59}H_{96}O_{26}$; M_r 1221).

CHARACTERS

Appearance: dark greenish-brown liquid.

IDENTIFICATION

Thin-layer chromatography (*2.2.27*).

Test solution. The mother tincture to be examined.

Reference solution. Dissolve 1 mg of *α-hederin R* and 1 mg of *hederacoside C R* in *methanol R* and dilute to 2 mL with the same solvent.

Plate: *TLC silica gel plate R*.

Mobile phase: *glacial acetic acid R*, *water R*, *butanol R* (1:1:4 *V/V/V*).

Application: 20 µL as bands.

Development: over half of the plate.

Drying: in air.

Detection: spray with a 10 per cent *V/V* solution of *sulfuric acid R* in *methanol R* and heat at 100-105 °C for 10 min. Examine in daylight.

Results: see below the sequence of the zones present in the chromatograms obtained with the reference solution and the test solution. Other faint zones may also be present in the chromatogram obtained with the test solution.

Top of the plate	
α-Hederin: a violet zone Hederacoside C: a brown zone	A violet zone (α-hederin) A brown zone (hederacoside C) A greyish-brown zone A yellow zone
Reference solution	**Test solution**

TESTS

Relative density (*2.2.5*): 0.890 to 0.925.

Ethanol (*2.9.10*): 60 per cent *V/V* to 70 per cent *V/V*.

Dry residue (*2.8.16*): minimum 2.0 per cent.

ASSAY

Liquid chromatography (*2.2.29*).

Test solution. In a 20.0 mL volumetric flask, dilute 3.000 g of the mother tincture to be examined to 20.0 mL with the mobile phase.

Reference solution. In a 50.0 mL volumetric flask, dissolve 20.0 mg of *hederacoside C R* in the mobile phase and dilute to 50.0 mL with the mobile phase.

Column:

- *size*: *l* = 0.25 m, Ø = 4 mm;
- *stationary phase*: *octadecylsilyl silica gel for chromatography R* (5 µm).

Mobile phase: mix 35 volumes of *water R*, adjusted to pH 3 with *phosphoric acid R*, and 65 volumes of *methanol R*.

Flow rate: 1 mL/min.

Detection: spectrophotometer at 205 nm.

Injection: 20 µL.

Retention time: hederacoside C = about 8 min.

Calculate the percentage content *m/m* of hederacoside C using the following expression:

$$\frac{A_1 \times m_2 \times C \times 0.4}{A_2 \times m_1}$$

A_1 = area of the peak due to hederacoside C in the chromatogram obtained with the test solution;

A_2 = area of the peak due to hederacoside C in the chromatogram obtained with the reference solution;

m_1 = mass of the mother tincture in the test solution, in grams;

m_2 = mass of *hederacoside C R* in the reference solution, in grams;

C = percentage content of *hederacoside C R*.

Homoeopathic preparations

01/2008:2024

HONEY BEE FOR HOMOEOPATHIC PREPARATIONS

Apis mellifera ad praeparationes homoeopathicas

DEFINITION

Live worker honey bee (*Apis mellifera* L.).

CHARACTERS

Characters described under Identification.

PRODUCTION

If the bee has been exposed to treatment to prevent or cure diseases, appropriate measures are taken to ensure that the levels of residues are as low as possible.

IDENTIFICATION

The body of a honey bee is about 15 mm long, black, with a silky sheen, and covered with red hairs with a touch of grey. The broad tibiae are without spines. The posterior margins of the segments and legs are brown, with gradual transition to orange-red. The claws are two-membered, the maxillary palps single-membered. On the hind legs are baskets or scoops invested with bristles. The wings have 3 complete cubital cells, with the radial cell twice as long as it is wide; the 3 cells on the lower margin and the 3 middle cells are closed. A duct connects the barbed sting with the poison sac.

Mother tincture

The mother tincture complies with the requirements of the general monograph *Mother tinctures for homoeopathic preparations (2029)*.

PRODUCTION

The mother tincture of *Apis mellifera* L. is prepared by maceration using alcohol of a suitable concentration.

CHARACTERS

Pale yellow liquid that may darken on storage.

IDENTIFICATION

Thin-layer chromatography (*2.2.27*).

Test solution. The mother tincture to be examined.

Reference solution. Dissolve 12 mg of *4-aminobutanoic acid R*, 12 mg of *leucine R* and 12 mg of *proline R* in 5 mL of *water R* and dilute to 50 mL with *alcohol R*.

Plate: *TLC silica gel plate R*.

Mobile phase: *water R*, *ethanol R* (17:63 *V/V*).

Application: 20 µL, as bands.

Development: over a path of 10 cm.

Drying: in air.

Detection: spray with *ninhydrin solution R* and heat at 100-105 °C for 10 min; examine in daylight.

Results: see below the sequence of the zones present in the chromatograms obtained with the reference and test solutions. Other zones may also be visible.

Top of the plate	
	A pink zone
Leucine: a pink zone	A pink zone
	A pink zone
	A pink zone
Proline: an orange-yellow zone	An orange-yellow zone
4-Aminobutanoic acid: a pink zone	A pink zone
Reference solution	**Test solution**

TESTS

Relative density (*2.2.5*): 0.890 to 0.910.

Ethanol (*2.9.10*): 60 per cent *V/V* to 70 per cent *V/V*.

Dry residue (*2.8.16*): minimum 0.30 per cent.

01/2012:2500

HYDRASTIS CANADENSIS FOR HOMOEOPATHIC PREPARATIONS

Hydrastis canadensis ad praeparationes homoeopathicas

The herbal drug complies with the requirements of the monograph *Goldenseal rhizome (1831)*.

Mother tincture

The mother tincture complies with the requirements of the general monograph *Mother tinctures for homoeopathic preparations (2029)*.

DEFINITION

The mother tincture is prepared from the whole or cut, dried rhizome and roots of *Hydrastis canadensis* L.

Content:

- *hydrastine* ($C_{21}H_{21}NO_6$; M_r 383.4): 0.10 per cent to 0.40 per cent;
- *berberine* ($C_{20}H_{18}NO_4$; M_r 336.4): 0.20 per cent to 0.50 per cent.

PRODUCTION

The mother tincture is prepared by the following methods prescribed in the monograph *Methods of preparation of homoeopathic stocks and potentisation (2371)*:

- Method 1.1.8, using the powdered herbal drug (710) (*2.9.12*) and ethanol (70 per cent *V/V*) [or ethanol (62 per cent *m/m*)];
- Method 1.1.10, using the fragmented herbal drug (pieces about 1 cm in diameter), ethanol (65 per cent *V/V*) and maceration for 3-5 weeks.

CHARACTERS

Appearance: yellowish-brown liquid.

IDENTIFICATION

Thin-layer chromatography (*2.2.27*).

Test solution. The mother tincture to be examined.

Reference solution. Immediately before use, dissolve 5 mg of *hydrastine hydrochloride R* and 5 mg of *berberine chloride R* in 10 mL of *methanol R*.

Plate: *TLC silica gel plate R* (5-40 µm) [or *TLC silica gel plate R* (2-10 µm)].

Mobile phase: *anhydrous formic acid R*, *water R*, *ethyl acetate R* (10:10:80 *V/V/V*).

Application: 20 µL [or 5 µL] as bands.

Development: over a path of 15 cm [or 6 cm].

Drying: in air.

Detection: examine in ultraviolet light at 365 nm.

Results: see below the sequence of fluorescent zones present in the chromatograms obtained with the reference solution and the test solution. Furthermore, other faint fluorescent zones may be present in the chromatogram obtained with the test solution.

Top of the plate	
Berberine: a bright yellow fluorescent zone Hydrastine: a deep blue fluorescent zone	A bright yellow fluorescent zone (berberine) A deep blue fluorescent zone (hydrastine)
Reference solution	**Test solution**

TESTS

Relative density (*2.2.5*): 0.890 to 0.905, where Method 1.1.8 is used.

Ethanol (*2.9.10*): 60 per cent *V/V* to 70 per cent *V/V*, where Method 1.1.10 is used.

Dry residue (*2.8.16*): minimum 1.2 per cent *m/m*.

ASSAY

Liquid chromatography (*2.2.29*).

Test solution. Dilute about 1.000 g, accurately weighed, of the mother tincture to be examined to 20.0 mL with the mobile phase.

Reference solution. Immediately before use, dissolve 10.0 mg of *hydrastine hydrochloride CRS* and 10.0 mg of *berberine chloride CRS* in *methanol R* and dilute to 100.0 mL with the same solvent.

Column:

- *size*: l = 0.125 m, Ø = 4 mm;
- *stationary phase*: *end-capped octadecylsilyl silica gel for chromatography R* (5 µm).

Mobile phase: dissolve 9.93 g of *potassium dihydrogen phosphate R* in 730 mL of *water R*, add 270 mL of *acetonitrile R* and mix.

Flow rate: 1.2 mL/min.

Detection: spectrophotometer at 235 nm.

Injection: 10 µL.

Elution order: hydrastine, berberine.

Identification of peaks: use the chromatogram obtained with the reference solution to identify the peaks due to hydrastine and berberine.

System suitability: reference solution:

- *resolution*: minimum 1.5 between the peaks due to hydrastine and berberine.

Calculate the percentage contents *m/m* of hydrastine using the following expression:

$$\frac{A_1 \times m_2 \times p \times 0.913}{A_2 \times m_1 \times 5}$$

Calculate the percentage contents *m/m* of berberine using the following expression:

$$\frac{A_1 \times m_2 \times p \times 0.905}{A_2 \times m_1 \times 5}$$

A_1 = area of the peak due to hydrastine or to berberine in the chromatogram obtained with the test solution;

A_2 = area of the peak due to hydrastine or to berberine in the chromatogram obtained with the reference solution;

m_1 = mass of the mother tincture to be examined used to prepare the test solution, in grams;

m_2 = mass of *hydrastine hydrochloride CRS* or mass of *berberine chloride CRS* used to prepare the reference solution, in grams;

p = percentage content of *hydrastine hydrochloride CRS* or percentage content of *berberine chloride CRS*.

01/2008:2091
corrected 6.0

HYOSCYAMUS FOR HOMOEOPATHIC PREPARATIONS

Hyoscyamus niger ad praeparationes homoeopathicas

DEFINITION

Whole, fresh flowering plant of *Hyoscyamus niger* L.

IDENTIFICATION

Hyoscyamus is an annual or biennial plant, with a well developed taproot. The robust, erect stem is hollow and subcylindrical and up to 80 cm long. The soft, viscid, dull dark-green leaves are densely pubescent on both surfaces, especially on the veins. The lower leaves are petiolate and are arranged in a rosette; the lower cauline leaves are semi-amplexicaul and the upper ones are completely amplexicaul. The lamina, up to 25 cm long, is oblong to ovate with 2 to 5 broadly dentate lobes on each side. The midrib is well developed. The secondary veins arise at a wide angle from the midrib and terminate in the apices of the lobes. The flowering tops are densely pubescent and form a short drooping cluster. Each flower arises in the axils of a large bract. The gamosepalous calyx is covered with dense cotton-like hairs and has 5 triangular-ovate lobes, each ending in a short point that becomes spiny. The gamopetalous corolla, with 5 nearly equal lobes, is yellowish and with a delicate, brown to blackish-violet venation. The fruit, sometimes present at the base of the inflorescences, is a pyxis distinctly swollen at the base.

TESTS

Foreign matter (*2.8.2*): if required by the competent authority, maximum 5 per cent.

Loss on drying (*2.2.32*): if required by the competent authority, minimum 50 per cent, determined on 5.0 g of the finely cut drug by drying in an oven at 105 °C for 2 h.

***Hyoscyamus albus* L.** The presence of middle and upper leaves with a petiole and of fruits barely swollen at the base indicates adulteration by *Hyoscyamus albus* L.

Mother tincture

The mother tincture complies with the requirements of the general monograph *Mother tinctures for homoeopathic preparations (2029)*.

PRODUCTION

The mother tincture of *Hyoscyamus niger* L. is prepared by maceration of the drug, using ethanol of a suitable concentration.

Content: 0.002 per cent *m/m* to 0.01 per cent *m/m* of total alkaloids, expressed as hyoscyamine ($C_{17}H_{23}NO_3$; M_r 289.4).

CHARACTERS

Appearance: dark greenish-brown liquid.

IDENTIFICATION

Thin-layer chromatography (*2.2.27*).

Test solution. Evaporate 10 mL of the mother tincture to be examined in a water-bath at 40 °C, under reduced pressure. Take up the residue with 1 mL of *ammonia R*, and shake with 2 quantities, each of 10 mL, of *ether R*. Combine the ether layers, dry over *anhydrous sodium sulfate R* and filter. Evaporate on a water-bath and dissolve the residue in 0.50 mL of *methanol R*.

Reference solution (a). Dissolve 50 mg of *hyoscyamine sulfate R* in 10 mL of *methanol R* (solution A). Dissolve 15 mg of *hyoscine hydrobromide R* in 10 mL of *methanol R* (solution B). Mix 4 mL of solution A and 2 mL of solution B and dilute to 10 mL with *methanol R*.

Reference solution (b). Dissolve 20 mg of *atropine sulfate R* in *methanol R* and dilute to 10 mL with the same solvent.

Plate: *TLC silica gel plate R*.

Mobile phase: *concentrated ammonia R*, *water R*, *acetone R* (3:7:90 *V/V/V*).

Application: 20 µL, as bands.

Development: over a path of 10 cm.

Drying: at 100-105 °C for 15 min.

Detection A: spray with *dilute potassium iodobismuthate solution R* until orange zones become visible. Examine in daylight.

Results A: see below the sequence of the zones present in the chromatograms obtained with the reference solutions and the test solution. Other faint zones may be present in the chromatogram obtained with the test solution.

Top of the plate		
Hyoscine: an orange zone		An orange zone (hyoscine)
Hyoscyamine: an orange zone	Atropine: an orange zone	A orange zone (hyoscyamine/atropine)
		Faint orange zones (line of application)
Reference solution (a)	**Reference solution (b)**	**Test solution**

Detection B: subsequently spray with *sodium nitrite solution R* until the yellow background disappears. Examine in daylight after 15 min.

Results B: see test for atropine.

TESTS

Relative density (*2.2.5*): 0.930 to 0.960.

Atropine. Examine the chromatograms obtained in the test for identification.

Results: the zone due to hyoscyamine in the chromatogram obtained with the test solution changes from orange to reddish-brown but not to greyish-blue (atropine).

Ethanol (*2.9.10*): 40 per cent *V/V* to 50 per cent *V/V*.

Dry residue (*2.8.16*): minimum 1.2 per cent.

ASSAY

Evaporate 100.0 g of the mother tincture to be examined, at a low temperature under reduced pressure, until a residue of about 10 g is obtained. Quantitatively transfer the residue to a separating funnel using a few millilitres of *ethanol (70 per cent V/V) R*. Add 5 mL of *concentrated ammonia R* and 25 mL of *water R*. Extract with successive fractions of a mixture of 1 volume of *chloroform R* and 3 volumes of *peroxide-free ether R* until the alkaloids are completely extracted. Evaporate to dryness a few millilitres of the last organic fraction. Take up the residue in *0.25 M sulfuric acid* and verify the absence of alkaloids using *potassium tetraiodomercurate solution R*. Combine the organic layers and extract several times with *0.25 M sulfuric acid*. Separate the layers by centrifugation if necessary and transfer the acid layers to a second separating funnel. Make the acid layer alkaline with *ammonia R* and shake with at least 3 quantities, each of 30 mL, of *chloroform R*. Combine the chloroform layers, add 4 g of *anhydrous sodium sulfate R* and allow to stand for 30 min with occasional shaking. Decant the chloroform and wash the anhydrous sodium sulfate with 3 quantities, each of 10 mL, of *chloroform R*. Combine the chloroform fractions, evaporate to dryness on a water-bath and dry in an oven at 100-105 °C for 15 min. Dissolve the residue in a few millilitres of *chloroform R*, add 10.0 mL of *0.005 M sulfuric acid* and remove the chloroform by evaporation on a water-bath. Titrate the excess of acid with *0.01 M sodium hydroxide* using *methyl red mixed solution R* as indicator.

Calculate the percentage content *m/m* of total alkaloids, expressed as hyoscyamine, from the expression:

$$\frac{0.2894\,(10 - n)}{m}$$

n = volume of *0.01 M sodium hydroxide* used, in millilitres;

m = mass of the mother tincture used, in grams.

01/2008:2028
corrected 6.0

HYPERICUM FOR HOMOEOPATHIC PREPARATIONS

Hypericum perforatum ad praeparationes homoeopathicas

DEFINITION

Whole, fresh plant of *Hypericum perforatum* L., at the beginning of the flowering period.

IDENTIFICATION

The perennial plant consists of a spindle-shaped root and a branched rhizome, giving rise to long, decumbent runners. The cylindrical, erect stem is woody at the base, 0.2 m to 1 m long, branched in the upper part, with 2 raised longitudinal lines.

The leaves are opposite, sessile, exstipulate, oblong-oval and 15 mm to 30 mm long. The leaf margins show black glandular dots, and many small translucent oil glands are present on the entire surface and are visible by transmitted light.

The flowers are regular and form corymbose clusters at the apex of the stem. They have 5 green, lanceolate sepals with acuminate apices, and black oil glands near the entire margins; 5 orange-yellow petals, much longer than the sepals, with black oil glands near the terminal margins only; 3 staminal blades, each divided into many orange-yellow stamens and 3 carpels surmounted by red styles. Each petal is asymmetrically linear-ovate in shape, with one of the margin entire and the other dentate.

TESTS

Foreign matter (*2.8.2*): maximum 4 per cent of fruits and maximum 1 per cent of other foreign matter.

Loss on drying (*2.2.32*): if performed to demonstrate the freshness of the drug, minimum 55 per cent, determined on 5.0 g of finely cut drug by drying in an oven at 105 °C.

Mother tincture

The mother tincture complies with the requirements of the general monograph *Mother tinctures for homoeopathic preparations (2029)*.

PRODUCTION

The mother tincture of *Hypericum perforatum* L. is prepared by maceration using alcohol of a suitable concentration.

CHARACTERS

Dark red to brownish red liquid.

IDENTIFICATION

Thin-layer chromatography (*2.2.27*).

Test solution. The mother tincture to be examined.

Reference solution. Dissolve 5 mg of *rutin R*, 1 mg of *hypericin R* and 5 mg of *hyperoside R* in *methanol R* and dilute to 5 mL with the same solvent.

Plate: *TLC silica gel plate R*.

Mobile phase: *anhydrous formic acid R*, *water R*, *ethyl acetate R* (6:9:90 *V/V/V*).

Application: 10 µL of the test solution and 5 µL of the reference solution, as 10 mm bands.

Development: over a path of 10 cm.

Drying: at 100-105 °C for 10 min.

Detection: spray with a 10 g/L solution of *diphenylboric acid aminoethyl ester R* in *methanol R* and then a 50 g/L solution of *macrogol 400 R* in *methanol R*. Examine the plates after 30 min in ultraviolet light at 365 nm.

Results: see below the sequence of the zones present in the chromatograms obtained with the reference solution and the test solution. In the chromatogram obtained with the test solution, the zone due to rutin may be weak or even absent. The chromatogram obtained with the test solution shows a group of zones that may be blue or yellow, with a R_F similar to that of the zone due to hyperoside in the chromatogram obtained with the reference solution. Other weak zones may also be visible.

Top of the plate	
	A yellow to blue zone
Hypericin: a red zone	2 red zones
	Several zones
Hyperoside: a yellow to orange zone	Blue or yellow zones
Rutin: a yellow to orange zone	A yellow to orange zone
Reference solution	**Test solution**

TESTS

Relative density (*2.2.5*): 0.900 to 0.920.

Ethanol (*2.9.10*): 60 per cent *V/V* to 75 per cent *V/V*.

Dry residue (*2.8.16*): minimum 1.3 per cent.

01/2008:2026
corrected 7.0

IRON FOR HOMOEOPATHIC PREPARATIONS

Ferrum ad praeparationes homoeopathicas

Fe A_r 55.85
[7439-89-6]

DEFINITION

Obtained by reduction or sublimation as a fine blackish-grey powder.

Content: 97.5 per cent to 101.0 per cent.

CHARACTERS

Appearance: fine, blackish-grey powder, without metallic lustre.

Solubility: practically insoluble in water and in ethanol (96 per cent). It dissolves with heating in dilute mineral acids.

IDENTIFICATION

Dissolve 50 mg in 2 mL of *dilute sulfuric acid R* and dilute to 10 mL with *water R*. The solution gives reaction (a) of iron (*2.3.1*).

TESTS

Solution S. To 10.0 g add 40 mL of *water R*. Boil for 1 min. Cool, filter and dilute to 50.0 mL with *water R*.

Alkalinity. To 10 mL of solution S add 0.1 mL of *bromothymol blue solution R1*. Not more than 0.1 mL of *0.01 M hydrochloric acid* is required to change the colour of the indicator to yellow.

Substances insoluble in hydrochloric acid. Dissolve 2.00 g in 40 mL of *hydrochloric acid R*. Heat on a water-bath. As soon as fumes are no longer evolved, filter through a sintered-glass filter (16) (*2.1.2*). Rinse with *water R*. Dry the residue in an oven at 100-105 °C for 1 h. The residue weighs a maximum of 20 mg (1.0 per cent).

Substances soluble in water. Evaporate 10.0 mL of solution S on a water-bath and dry at 100-105 °C for 1 h. The residue weighs a maximum of 2 mg (0.1 per cent).

Chlorides (*2.4.4*): maximum 50 ppm.

Dilute 5 mL of solution S to 15 mL with *water R*.

Sulfides and phosphides. In a 100 mL conical flask carefully mix 1.0 g with 10 mL of *dilute hydrochloric acid R*. Within 30 s *lead acetate paper R* moistened with *water R* and placed over the mouth of the flask is not coloured more intensely than light brown by the resulting fumes.

Arsenic (*2.4.2*): maximum 5 ppm.

Boil 0.2 g in 25 mL of *dilute hydrochloric acid R* until completely dissolved. The solution complies with limit test A.

Copper: maximum 50 ppm.

Atomic absorption spectrometry (*2.2.23, Method I*).

Test solution. Dissolve 1.00 g in a mixture of 60 mL of *dilute hydrochloric acid R* and 10 mL of *dilute hydrogen peroxide solution R*. Reduce to a volume of 5 mL and dilute to 50.0 mL with *water R*.

Reference solutions. Prepare the reference solutions using *copper standard solution (0.1 per cent Cu) R*, diluted as necessary with a 1 per cent *V/V* solution of *hydrochloric acid R*.

Source: copper hollow-cathode lamp.

Wavelength: 324.8 nm.

Flame: air-acetylene.

Lead: maximum 50 ppm.

Atomic absorption spectrometry (*2.2.23, Method I*).

Test solution. In a separating funnel, place 20 mL of the test solution prepared for the test for copper. Add 25 mL of *lead-free hydrochloric acid R*. Stir with 3 quantities, each of 25 mL, of *di-isopropyl ether R*. Collect the aqueous layer. Add 0.10 g of *sodium sulfate decahydrate R*. Evaporate to dryness. Take up the residue with 1 mL of *lead-free nitric acid R* and dilute to 20 mL with *water R*.

Reference solutions. Prepare the reference solutions using *lead standard solution (0.1 per cent Pb) R*, diluted as necessary with a 10 per cent *V/V* solution of *nitric acid R* containing 5 g/L of *sodium sulfate decahydrate R*.

Source: lead hollow-cathode lamp.

Wavelength: 217 nm.

Flame: air-acetylene.

ASSAY

Stir for 10 min 0.100 g in a hot solution of 1.25 g of *copper sulfate R* in 20 mL of *water R* in a 100 mL conical flask with a ground-glass stopper. Filter rapidly and wash the filter. Combine the filtrate and the washings, acidify with *dilute sulfuric acid R* and titrate with *0.02 M potassium permanganate* until a pink colour is obtained.

1 mL of *0.02 M potassium permanganate* is equivalent to 5.585 mg of Fe.

LABELLING

The label indicates whether the iron for homoeopathic preparations is obtained by reduction or sublimation.

01/2008:2094
corrected 6.0

ORIENTAL CASHEW FOR HOMOEOPATHIC PREPARATIONS

Semecarpus anacardium ad praeparationes homoeopathicas

DEFINITION

Dried fruit of *Semecarpus anacardium* L. (*Anacardium orientale* L.).

Content: minimum 6.0 per cent *m/m* of total phenol derivatives expressed as eugenol ($C_{10}H_{12}O_2$; M_r 164.2) (dried drug).

IDENTIFICATION

A. The dried fruit is oval and more or less heart-shaped; about 2 cm long, nearly 2 cm wide and 0.5 cm thick. Its surface is smooth, shiny and blackish. A transverse section shows a rather well developed, tough pericarp riddled with rather wide lacunae containing an abundant thick reddish-brown juice. The pericarp covers a white kernel under a reddish skin. The fruit may include the blackish, fleshy, wrinkled, cupuliferous receptacle.

B. Thin-layer chromatography (*2.2.27*).

Test solution. To 1.0 g of suitably cut drug, add 10 mL of *ethanol (90 per cent V/V) R*. Heat under reflux on a water-bath at 60 °C for 15 min. Allow to cool and filter.

Reference solution. Dissolve 5 mg of *gallic acid R* and 5 mg of *caffeic acid R* in *methanol R* and dilute to 10 mL with the same solvent.

Plate: *TLC silica gel plate R*.

Mobile phase: *methanol R*, *toluene R* (15:85 *V/V*).

Application: 20 µL of the test solution and 10 µL of the reference solution, as bands.

Development: over a path of 15 cm.

Drying: in air.

Detection: spray with a solution containing 10 g/L of *diphenylboric acid aminoethyl ester R* and 50 g/L of *macrogol 400 R* in *methanol R*. Examine in ultraviolet light at 365 nm.

Results: see below the sequence of zones present in the chromatograms obtained with the reference solution and the test solution. Furthermore, other fainter zones may be present in the chromatogram obtained with the test solution.

Top of the plate	
	A greenish-blue fluorescent zone
	Several violet-blue fluorescent zones
	A yellow fluorescent zone
Caffeic acid: a violet-blue fluorescent zone	
Gallic acid: a violet-blue fluorescent zone	A violet-blue fluorescent zone (gallic acid)
Reference solution	**Test solution**

TESTS

***Anacardium occidentale* L.** Fruits of *Anacardium occidentale* L. are not present. These are up to 35 mm long, 30 mm large, 20 mm thick, light brown and distinctly kidney-shaped. The pericarp is smooth or slightly crinkled with dark marbling in places.

Loss on drying (*2.2.32*): maximum 12.0 per cent, determined on 1.000 g of the finely divided drug by drying in an oven at 105 °C for 2 h.

Total ash (*2.4.16*): maximum 5.0 per cent.

ASSAY

Total phenol derivatives. Absorption spectrophotometry (*2.2.25*).

Stock solution. Place 4.500 g of the crushed drug in a flask. Add 200 mL of *ethanol (90 per cent V/V) R*. Boil in a water-bath under reflux for 4 h. Cool the flask. Quantitatively transfer into a volumetric flask. Dilute to 250.0 mL with *ethanol (90 per cent V/V) R*. Filter the liquid through a paper filter 125 mm in diameter. Discard the first 50 mL of the filtrate. Dilute 5.0 mL of filtrate to 50.0 mL with *ethanol (90 per cent V/V) R* and shake. Dilute 5.0 mL of this solution to 10.0 mL with *ethanol (90 per cent V/V) R* and shake.

Test solution. To 2.0 mL of stock solution add 1.0 mL of *phosphomolybdotungstic reagent R* and 10 mL of *water R*, mix and dilute to 25.0 mL with a 290 g/L solution of *sodium carbonate R*. Wait exactly 3 min then filter the solution through a fibre-glass filter with a 1 µm mesh aperture, discarding the first 5 mL.

Reference solution. Dissolve 80.0 mg of *eugenol R* in *ethanol (90 per cent V/V) R* and dilute to 250.0 mL with the same solvent. Dilute 5.0 mL of the solution to 25.0 mL with *ethanol (90 per cent V/V) R*. To 2.0 mL of this solution add 1.0 mL of *phosphomolybdotungstic reagent R* and 10 mL of *water R*, mix and dilute to 25.0 mL with a 290 g/L solution of *sodium carbonate R*. Wait exactly 3 min then filter the solution through a fibre-glass filter with a 1 µm mesh aperture, discarding the first 5 mL.

Measure the absorbance (*2.2.25*) of the test solution and the reference solution at 755 nm after 30 min using *water R* as compensation liquid.

Calculate the percentage content *m/m* of total phenol derivatives, expressed as eugenol, from the following expression:

$$\frac{A_1 \times m_2 \times 400}{A_2 \times m_1}$$

A_1 = absorbance of the test solution;

A_2 = absorbance of the reference solution;

m_1 = mass of the drug to be examined, in milligrams;

m_2 = mass of eugenol in the reference solution, in milligrams.

Mother tincture

The mother tincture complies with the requirements of the general monograph *Mother tinctures for homoeopathic preparations (2029)*.

DEFINITION

The mother tincture of oriental cashew is prepared by maceration using ethanol of a suitable concentration from the dried fruit of *Semecarpus anacardium* L. (*Anacardium orientale* L.).

Content: 0.5 per cent *m/m* to 1.0 per cent *m/m* of total phenol derivatives expressed as eugenol.

CHARACTERS

Appearance: yellowish-brown or reddish-brown liquid.

IDENTIFICATION

Thin-layer chromatography (*2.2.27*) as described under Identification B of the drug with the following modification.

Test solution. The tincture to be examined.

Results: see identification B for the drug.

TESTS

Relative density (*2.2.5*): 0.815 to 0.845.

Ethanol (*2.9.10*): 85 per cent *V/V* to 95 per cent *V/V*.

Dry residue (*2.8.16*): minimum 1.50 per cent *m/m*.

ASSAY

Total phenol derivatives. Absorption spectrophotometry (*2.2.25*) as described in the assay of the drug to be examined with the following modifications.

Stock solution. Place 8.000 g of the mother tincture to be examined in a volumetric flask and dilute to 250.0 mL with *ethanol (90 per cent V/V) R*. Dilute 5.0 mL of this solution to 20.0 mL with *ethanol (90 per cent V/V) R*.

Test solution. To 2.0 mL of stock solution add 1.0 mL of *phosphomolybdotungstic reagent R* and 10 mL of *water R*, mix and dilute to 25.0 mL with a 290 g/L solution of *sodium carbonate R*. Wait exactly 3 min then filter the solution through a fibre-glass filter with a 1 µm mesh aperture, discarding the first 5 mL.

Reference solution. Dissolve 80.0 mg of *eugenol R* in *ethanol (90 per cent V/V) R* and dilute to 250.0 mL with the same solvent. Dilute 5.0 mL of the solution to 25.0 mL with *ethanol (90 per cent V/V) R*. To 2.0 mL of this solution add 1.0 mL of *phosphomolybdotungstic reagent R* and 10 mL of *water R*, mix and dilute to 25.0 mL with a 290 g/L solution of *sodium carbonate R*. Wait exactly 3 min then filter the solution through a fibre-glass filter with a 1 µm mesh aperture, discarding the first 5 mL.

Measure the absorbance (*2.2.25*) of the test solution and the reference solution at 755 nm after 30 min, using *water R* as compensation liquid.

Calculate the percentage content *m/m* of total phenol derivatives expressed as eugenol, using the following expression:

$$\frac{A_1 \times m_2 \times 80}{A_2 \times m_1}$$

A_1 = absorbance of the test solution;

A_2 = absorbance of the reference solution;

m_1 = mass of the mother tincture to be examined, in milligrams;

m_2 = mass of eugenol in the reference solution, in milligrams.

04/2011:2501

POTASSIUM DICHROMATE FOR HOMOEOPATHIC PREPARATIONS

Kalii bichromas ad praeparationes homoeopathicas

$K_2Cr_2O_7$ M_r 294.2
[7778-50-9]

DEFINITION

Content: 99.0 per cent to 101.0 per cent of $K_2Cr_2O_7$.

CHARACTERS

Appearance: orange crystals.

Solubility: freely soluble in water, practically insoluble in ethanol (96 per cent).

IDENTIFICATION

A. It gives reaction (b) of potassium (*2.3.1*).

B. Dissolve 10 mg in 5 mL of *water R*. Add 0.25 mL of *dilute sulfuric acid R*, 0.5 mL of *strong hydrogen peroxide solution R* and 1 mL of *ether R*. Shake. The upper layer is blue.

TESTS

Solution S1. Dissolve 5.0 g in *distilled water R* and dilute to 50.0 mL with the same solvent.

Solution S2. To 20.0 mL of solution S1 add 20 mL of *hydrochloric acid R* and 50 mL of *tributyl phosphate R*. Stir for 2 min. Remove the lower layer and shake it with 10 mL of *ether R*. Evaporate the lower layer to dryness under reduced pressure. Dissolve the residue in 10 mL of *distilled water R*. Add *dilute ammonia R1* until the solution is neutral to *blue litmus paper R* and dilute to 20.0 mL with *distilled water R*.

Appearance of solution. Solution S1 is clear (*2.2.1*).

Calcium (*2.4.3*): maximum 500 ppm.

Dilute 2.0 mL of solution S2 to 15 mL with *distilled water R*.

Chlorides (*2.4.4*): maximum 50 ppm.

Dissolve 1.0 g in 15 mL of *dilute nitric acid R*. Use 1 mL of *nitric acid R* instead of the prescribed *dilute nitric acid R*.

Sulfates (*2.4.13*): maximum 150 ppm.

Dilute 10 mL of solution S2 to 15 mL with *distilled water R*.

ASSAY

Dissolve 0.100 g in 25 mL of *water R*. Add 2 g of *potassium iodide R* and 25 mL of *dilute sulfuric acid R*. Allow to stand in the dark for 10 min. Add 150 mL of *water R*. Titrate with *0.1 M sodium thiosulfate* until the colour changes from blue to green, adding 1 mL of *starch solution R* near the end of the titration.

1 mL of *0.1 M sodium thiosulfate* is equivalent to 4.903 mg of $K_2Cr_2O_7$.

01/2008:1624
corrected 6.0

SAFFRON FOR HOMOEOPATHIC PREPARATIONS

Croci stigma ad praeparationes homoeopathicas

DEFINITION

Dried stigmas of *Crocus sativus* L. usually joined by the base to a short style.

CHARACTERS

Characteristic, aromatic odour.

IDENTIFICATION

A. The dark brick-red stigmas, when dry, are 20 mm to 40 mm long and after soaking with water, about 35 mm to 50 mm long. The tubes, gradually widening at the top, are incised on one side, the upper margin is open and finely crenated. The style connecting the 3 stigmas is pale yellow and not more than 5 mm long.

B. Examine under a microscope using *chloral hydrate solution R*. It shows the following diagnostic characters: elongated epidermal cells, frequently with a short, central papilla; in water they release a yellow colouring matter; the upper border of the stigma has finger-shaped papillae, up to 150 µm long; between them are single, globular pollen grains, about 100 µm wide, with a finely pitted exine, vascular bundles with small spirally thickened vessels and no fibres.

C. Carefully crush pieces of the drug to coarse particles and moisten with 0.2 mL of *phosphomolybdic acid solution R*. The particles turn blue within 1-2 min or they have a blue areole around them.

D. Examine by thin-layer chromatography (*2.2.27*).

Test solution. Carefully crush 0.1 g of the drug with a glass rod and moisten with 0.2 mL of *water R*. After 3 min add 5 mL of *methanol R*, allow to stand for 20 min, protected from light, and filter through a plug of glass wool.

Reference solution. Dissolve 5 mg of *naphthol yellow R* in 5 mL of *methanol R* and add a solution of 5 mg of *Sudan red G R* in 5 mL of *methylene chloride R*.

Plate: *TLC silica gel F_{254} plate R*.

Mobile phase: *water R*, *2-propanol R*, *ethyl acetate R* (10:25:65 *V/V/V*).

Application: 10 µL of the test solution and 5 µL of the reference solution as bands.

Development: over a path of 10 cm.

Drying: in air.

Detection: examine in daylight.

Results: see below the sequence of the zones present in the chromatograms obtained with the reference and test solutions.

Top of the plate	
A red zone A yellow zone	
	2 yellow zones An intense yellow zone (crocine)
Reference solution	**Test solution**

Detection: in ultraviolet light at 254 nm.

Results: see below the sequence of the zones present in the chromatograms obtained with the reference and test solutions.

Top of the plate	
A red zone A yellow zone	1 or 2 quenching zones A quenching zone
Reference solution	**Test solution**

Detection: spray with *anisaldehyde solution R* and examine in daylight while heating at 100-105 °C for 5-10 min.

Results: see below the sequence of the zones present in the chromatograms obtained with the reference and test solutions.

Top of the plate	
A red zone A blue to bluish-green zone	1 or 2 red to reddish-violet zones A red to reddish-violet zone 2 blue to bluish-green zones An intense blue to bluish-green zone (crocine)
Reference solution	**Test solution**

E. Dilute 0.1 mL of the test solution (see Identification test D) with 1 mL of *methanol R*. Deposit 0.1 mL of this solution on a filter paper, allow to dry and spray with a 10 g/L solution of *diphenylboric acid aminoethyl ester R* in *methanol R*. Examine in ultraviolet light at 365 nm. The spot shows an intense orange-yellow fluorescence.

TESTS

Colouring intensity. Introduce 0.10 g into a 5 mL volumetric flask and add to 5.0 mL with *distilled water R*. Close the flask and shake every 30 min for 8 h. Then allow to stand for 16 h. Dilute 1.0 mL to 500.0 mL with *distilled water R*. The absorbance (*2.2.25*) measured at 440 nm using *distilled water R* as the compensation liquid, is not less than 0.44.

Foreign matter. Examine the drug microscopically. No parts with rough walls, no crystals and no pollen grains containing 3 germinal pores are present.

Loss on drying (*2.2.32*): maximum 10.0 per cent, determined on 0.200 g by drying in an oven at 105 °C.

Total ash (*2.4.16*): maximum 7.0 per cent, determined on the residue obtained in the test for loss on drying.

04/2011:2141

SODIUM TETRACHLOROAURATE DIHYDRATE FOR HOMOEOPATHIC PREPARATIONS

Natrii tetrachloroauras dihydricus ad praeparationes homoeopathicas

$Na[AuCl_4],2H_2O$ M_r 397.8

DEFINITION

Sodium tetrachloroaurate(1-) dihydrate.

Content: 97.0 per cent to 101.0 per cent of $Na[AuCl_4],2H_2O$.

CHARACTERS

Appearance: orange-yellow, hygroscopic powder or crystals.

Solubility: very soluble or freely soluble in water and in ethanol (96 per cent).

IDENTIFICATION

A. Dissolve 20 mg in 2.0 mL of *0.1 M nitric acid*. Add 0.1 g of *oxalic acid R* and boil in a water-bath for 1 h. A deposit of metallic gold is formed.

B. Solution S (see Tests) gives reaction (a) of chlorides (*2.3.1*).

C. Solution S gives reaction (b) of sodium (*2.3.1*).

TESTS

Solution S. Ignite 0.20 g in a porcelain crucible at 600 °C ± 50 °C for 30 min. Allow to cool and extract with 3 mL of *water R*, heating if necessary. Use the supernatant.

Free hydrochloric acid. When a glass rod impregnated with *concentrated ammonia R* is held close to the substance to be examined, no white fumes are produced.

Nitrates: maximum 200 ppm.

Dissolve 0.20 g in 10 mL of *nitrate-free water R*. Add 0.2 g of *oxalic acid R*. Heat the solution on a water-bath for 30 min, allow to cool and filter. Rinse the filter with *nitrate-free water R* and dilute the filtrate to 20 mL with the same solvent. To 1.0 mL of the solution obtained add 4.0 mL of *nitrate-free water R*, 0.4 mL of a 100 g/L solution of *potassium chloride R*, 0.1 mL of *diphenylamine solution R* and, dropwise with shaking, 5 mL of *nitrogen-free sulfuric acid R*. Transfer the tube to a water-bath at 50 °C. After 15 min, any blue colour in the solution is not more intense than that in a reference solution prepared at the same time in the same manner using a mixture of 0.2 mL of *nitrate standard solution (10 ppm NO_3) R* and 4.8 mL of *nitrate-free water R*.

Heavy metals (*2.4.8*): maximum 100 ppm.

Dissolve 0.20 g in 15 mL of *water R*. Add 0.25 g of *hydrazine sulfate R*. Heat the solution on a water-bath for 30 min, allow to cool and filter. Rinse the filter with *water R* and dilute the filtrate to 20 mL with the same solvent. 12 mL of the solution complies with test A. Prepare the reference solution using *lead standard solution (1 ppm Pb) R*.

ASSAY

Dissolve 40.0 mg in 10 mL of *potassium iodide solution R*. Allow to stand for 5 min. Titrate with *0.01 M sodium thiosulfate* until decolourised. Shortly before reaching the endpoint, add 0.5 mL of *starch solution R*.

1 mL of *0.01 M sodium thiosulfate* is equivalent to 1.989 mg of $Na[AuCl_4],2H_2O$.

STORAGE

In an airtight container, protected from light.

04/2011:2515

SULFUR FOR HOMOEOPATHIC PREPARATIONS

Sulfur ad praeparationes homoeopathicas

S A_r 32.07
[7704-34-9]

DEFINITION

Obtained by sublimation.

Content: 99.0 per cent to 101.0 per cent.

CHARACTERS

Appearance: yellow powder.

Solubility: practically insoluble in water, soluble in carbon disulfide, slightly soluble in vegetable oils.

mp: about 120 °C.

IDENTIFICATION

A. Heated in the presence of air, it burns with a blue flame, emitting sulfur dioxide, which changes the colour of moistened *blue litmus paper R* to red.

B. Heat 0.1 g with 0.5 mL of *bromine water R* until decolourised. Add 5 mL of *water R* and filter. The solution gives reaction (a) of sulfates (*2.3.1*).

TESTS

Solution S. To 5.0 g add 50 mL of *carbon dioxide-free water R* prepared from *distilled water R*. Allow to stand for 30 min with frequent shaking and filter.

Appearance of solution. Solution S is colourless (*2.2.2, Method II*).

Odour (*2.3.4*). It has no perceptible odour of hydrogen sulfide.

Acidity or alkalinity. To 5 mL of solution S add 0.1 mL of *phenolphthalein solution R1*. The solution is colourless. Add 0.2 mL of *0.01 M sodium hydroxide*. The solution is red. Add 0.3 mL of *0.01 M hydrochloric acid*. The solution is colourless. Add 0.15 mL of *methyl red solution R*. The solution is orange-red.

Chlorides (*2.4.4*): maximum 100 ppm.

Dilute 5 mL of solution S to 15 mL with *water R*.

Sulfates (*2.4.13*): maximum 100 ppm, determined on solution S.

Sulfides. To 10 mL of solution S add 2 mL of *buffer solution pH 3.5 R* and 1 mL of a freshly prepared 1.6 g/L solution of *lead nitrate R* in *carbon dioxide-free water R*. Shake. After 1 min any colour in the solution is not more intense than that in a reference solution prepared at the same time using 1 mL of *lead standard solution (10 ppm Pb) R*, 9 mL of *carbon dioxide-free water R*, 2 mL of *buffer solution pH 3.5 R* and 1.2 mL of *thioacetamide reagent R*.

Arsenic (*2.4.2, Method B*): maximum 8 ppm.

Shake 2.5 g with 50 mL of *dilute ammonia R1* for 1 h and filter. Evaporate 25 mL of the filtrate to dryness. Add 2 mL of *water R* and 3 mL of *nitric acid R* to the residue and evaporate to dryness. The residue complies with the test.

Prepare the standard using 1 mL of *arsenic standard solution (10 ppm As) R*.

Sulfated ash (*2.4.14*): maximum 0.2 per cent, determined on 1.0 g.

ASSAY

Carry out the oxygen-flask method (*2.5.10*), using 60.0 mg in a 1000 mL combustion flask with a teflon joint. Absorb the combustion products in a mixture of 5 mL of *dilute hydrogen peroxide solution R* and 10 mL of *water R*. Heat to boiling, boil gently for 2 min and cool. Using 0.2 mL of *phenolphthalein solution R* as indicator, titrate with *0.1 M sodium hydroxide* until the colour changes from colourless to red. Carry out a blank titration under the same conditions.

1 mL of *0.1 M sodium hydroxide* is equivalent to 1.603 mg of S.

STORAGE

Protected from light.